NOTES:

1. SEE SHEETS E-001 & EL001 FOR GENERAL ELECTRICAL NOTES AND LEGEND.

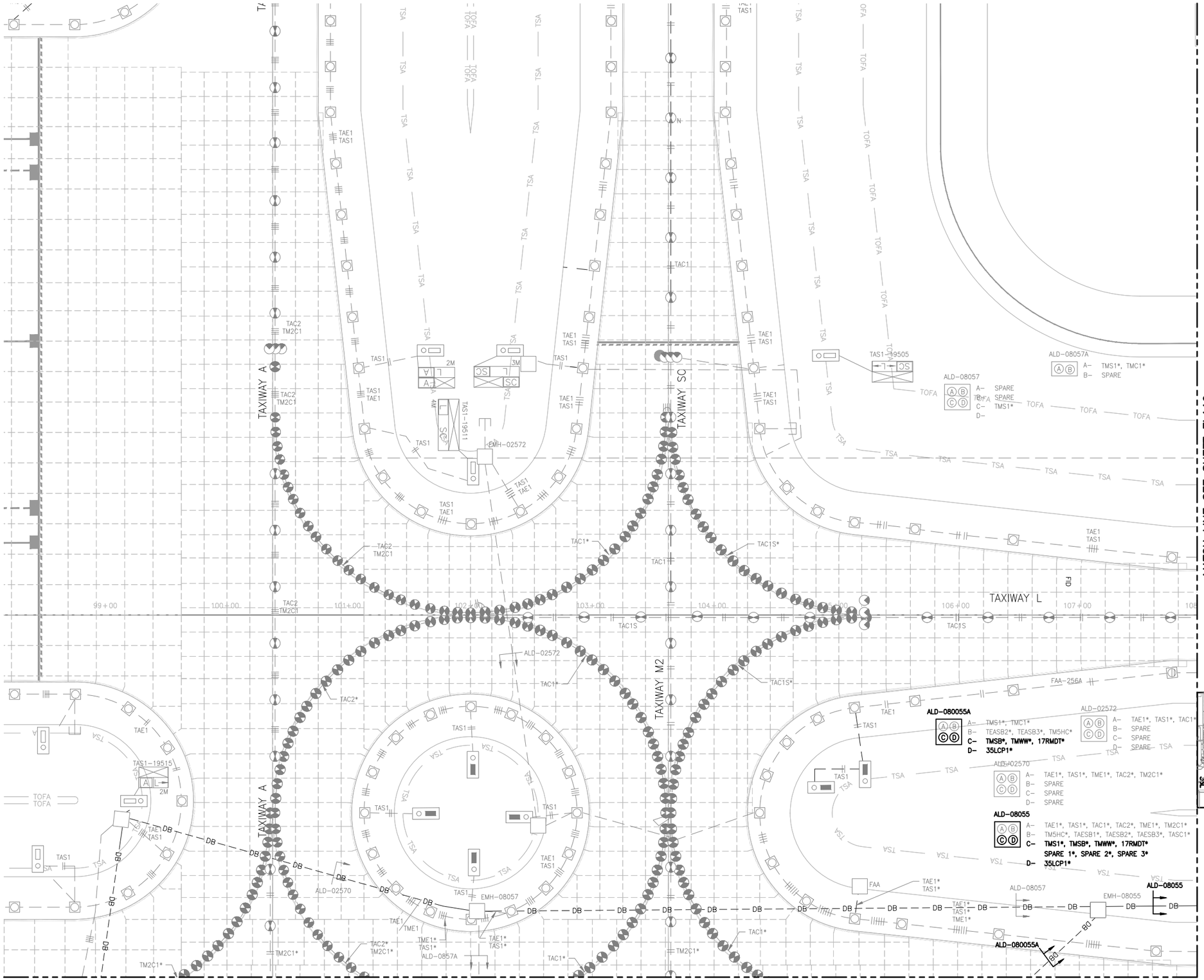

NORTH

40' 20' 0 40'

KEY PLAN

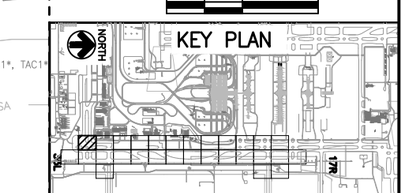

COLORADO LICENSED
DARON LEAN
52246
2/15/19
PROFESSIONAL ENGINEER

CITY & COUNTY of DENVER

DENVER INTERNATIONAL AIRPORT

LEAN ENGINEERING

RUNWAY 17R-35L COMPLEX PAVEMENT REHABILITATION PACKAGE 1

ISSUE RECORD

NO.	BY	PURPOSE	DATE	CKD
1	LE	50% DESIGN	09/14/18	DL
2	LE	90% DESIGN	10/26/18	DL
3	LE	BID	12/26/18	DL
4	LE	CONSTRUCTION	2/15/19	DL

SCALE: AS INDICATED

DATE: FEBRUARY 15, 2019

DRAWN BY: KV

CHECKED BY: JA

FAA AIP NO:

WORK BREAKDOWN NO.

DESIGN CONTRACT NO. 201735882

CONST. CONTRACT NO. 201846271

VOLUME NO.

SHEET TITLE: ELECTRICAL NEW PLAN (18 OF 29)

SHEET NO. EL118

240 OF 396

CADD FILE NO. _201735882-B1EELP-1220

D:\dropbox (lean photometrics)\active projects\1571801a rah den 17r-35l reconstruction\01 drawings\working drawings\Sheets_201735882-B1EELP-1220.dwg Feb 12, 2019 - 5:17pm Kat

NOTES:

1. SEE SHEETS E-001 & EL001 FOR GENERAL ELECTRICAL NOTES AND LEGEND.

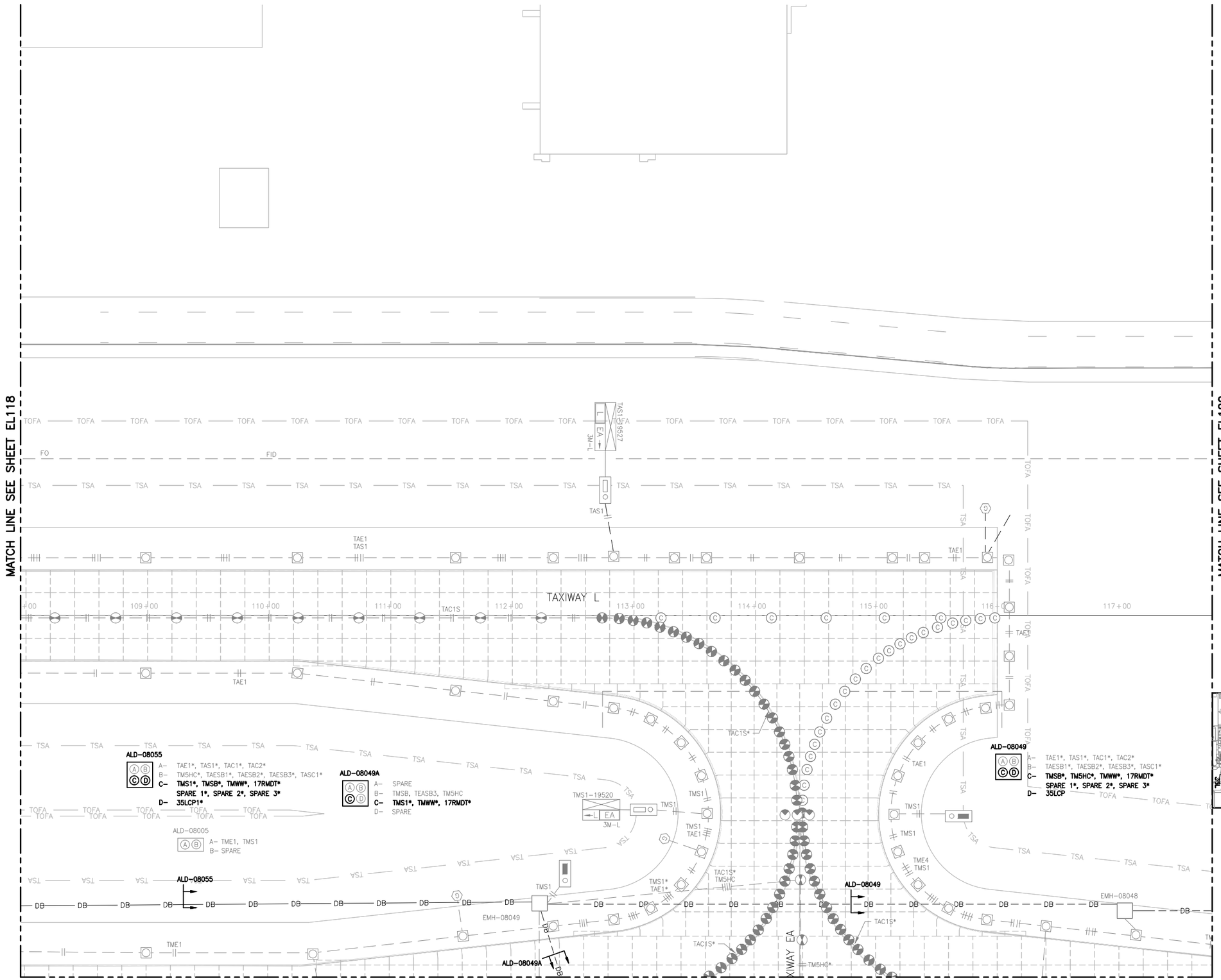

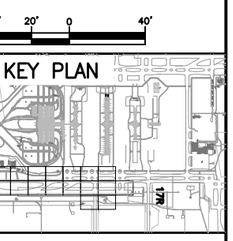

COLORADO LICENSED
JORON LEA
52246
2/15/19
PROFESSIONAL ENGINEER

CITY & COUNTY of DENVER

DENVER INTERNATIONAL AIRPORT

LEAN ENGINEERING

RUNWAY 17R-35L COMPLEX PAVEMENT REHABILITATION PACKAGE 1

ISSUE RECORD

NO.	BY	PURPOSE	DATE	CKD
1	LE	50% DESIGN	09/14/18	DL
2	LE	90% DESIGN	10/26/18	DL
3	LE	BID	12/26/18	DL
4	LE	CONSTRUCTION	2/15/19	DL

SCALE: AS INDICATED

DATE: FEBRUARY 15, 2019

DRAWN BY: KV

CHECKED BY: JA

FAA AIP NO:

WORK BREAKDOWN NO.

DESIGN CONTRACT NO. 201735882

CONST. CONTRACT NO. 201846271

VOLUME NO.

SHEET TITLE: ELECTRICAL NEW PLAN (19 OF 29)

SHEET NO. EL119

CADD FILE NO. _201735882-B1EELP-1220

D:\dropbox (lean photometrics)\active projects\1571801a rah den 17r-35l reconstruction\01 drawings\working drawings\Sheets_201735882-B1EELP-1220.dwg Feb 12, 2019 - 5:17pm Kat

NOTES:

1. SEE SHEETS E-001 & EL001 FOR GENERAL ELECTRICAL NOTES AND LEGEND.

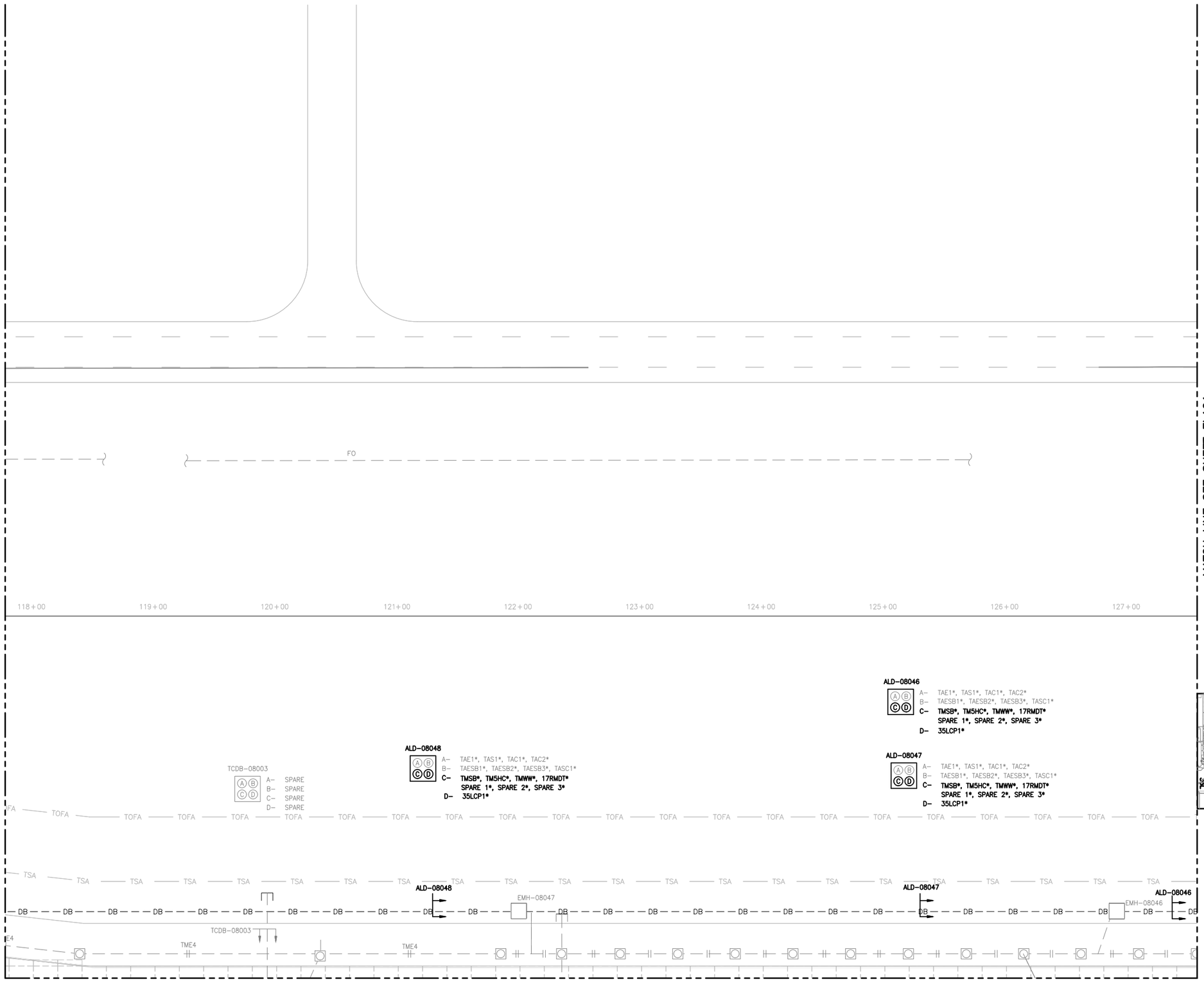

NORTH

40' 20' 0 40'

KEY PLAN

CITY & COUNTY of DENVER

DENVER INTERNATIONAL AIRPORT

LEAN ENGINEERING

RUNWAY 17R-35L COMPLEX PAVEMENT REHABILITATION PACKAGE 1

ISSUE RECORD

NO.	BY	PURPOSE	DATE	CKD
1	LE	50% DESIGN	09/14/18	DL
2	LE	90% DESIGN	10/26/18	DL
3	LE	BID	12/26/18	DL
4	LE	CONSTRUCTION	2/15/19	DL

SCALE: AS INDICATED

DATE: FEBRUARY 15, 2019

DRAWN BY: KV

CHECKED BY: JA

FAA AIP NO:

WORK BREAKDOWN NO.

DESIGN CONTRACT NO. 201735882

CONST. CONTRACT NO. 201846271

VOLUME NO.

SHEET TITLE: ELECTRICAL NEW PLAN (20 OF 29)

SHEET NO. EL120

242 OF 396

CADD FILE NO. _201735882-B1EELP-1220

D:\dropbox (lean photometrics)\active projects\1571801a rah den 17r-35l reconstruction\01 drawings\working drawings\Sheets_201735882-B1EELP-1220.dwg Feb 12, 2019 - 5:17pm Kat

NOTES:

1. SEE SHEETS E-001 & EL001 FOR GENERAL ELECTRICAL NOTES AND LEGEND.

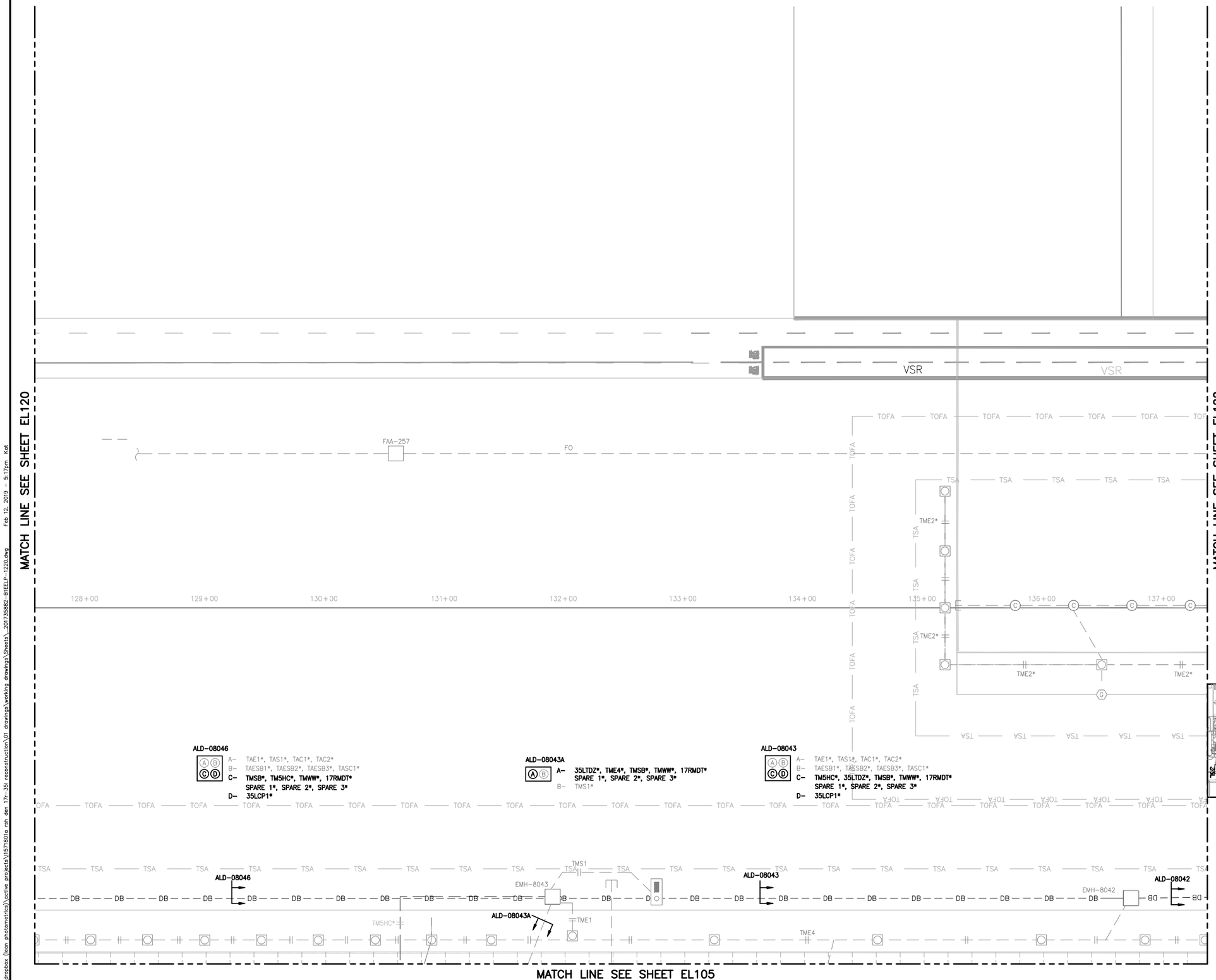

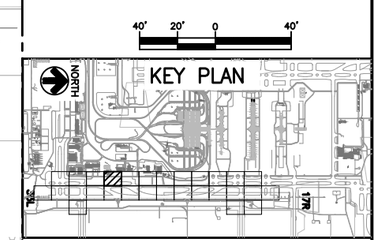

NORTH

40' 20' 0 40'

COLORADO LICENSED
BARON LEAN
52246
2/15/19
PROFESSIONAL ENGINEER

CITY & COUNTY of DENVER

DENVER INTERNATIONAL AIRPORT

LEAN ENGINEERING

RUNWAY 17R-35L COMPLEX PAVEMENT REHABILITATION PACKAGE 1

ISSUE RECORD

NO.	BY	PURPOSE	DATE	CKD
1	LE	50% DESIGN	09/14/18	DL
2	LE	90% DESIGN	10/26/18	DL
3	LE	BID	12/26/18	DL
4	LE	CONSTRUCTION	2/15/19	DL

SCALE: AS INDICATED

DATE: FEBRUARY 15, 2019

DRAWN BY: KV

CHECKED BY: JA

FAA AIP NO:

WORK BREAKDOWN NO.

DESIGN CONTRACT NO. 201735882

CONST. CONTRACT NO. 201846271

VOLUME NO.

SHEET TITLE

ELECTRICAL NEW PLAN (21 OF 29)

SHEET NO. EL121

243 OF 396

CADD FILE NO. _201735882-B1EELP-1220

D:\dropbox (lean photometrics)\active projects\1571801a rah den 17r-35l reconstruction\01 drawings\working drawings\Sheets_201735882-B1EELP-1220.dwg Feb 12, 2019 - 5:17pm Kat

NOTES:

1. SEE SHEETS E-001 & EL001 FOR GENERAL ELECTRICAL NOTES AND LEGEND.

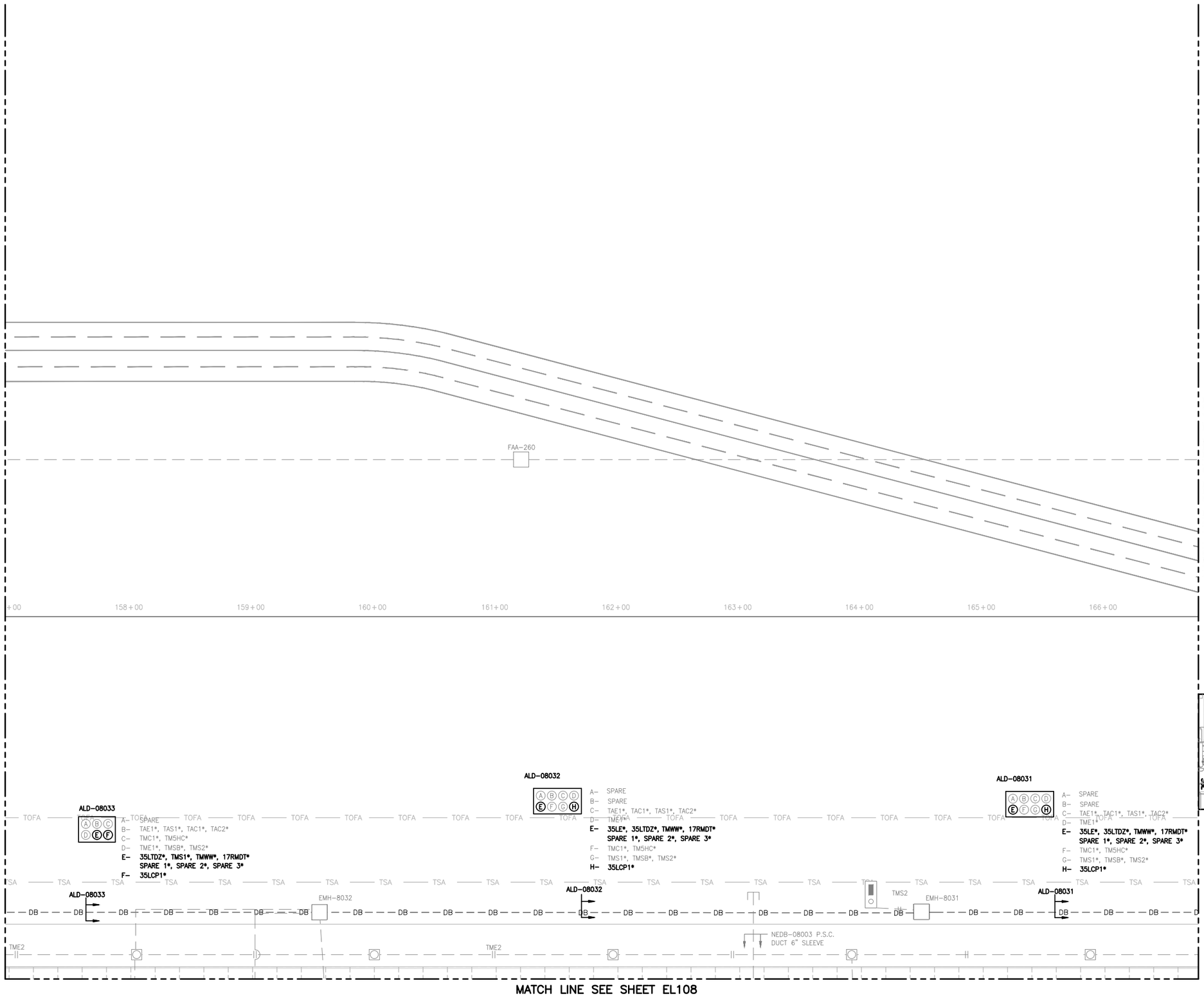

CITY & COUNTY of DENVER

DENVER INTERNATIONAL AIRPORT

LEAN ENGINEERING

RUNWAY 17R-35L COMPLEX PAVEMENT REHABILITATION PACKAGE 1

ISSUE RECORD

NO.	BY	PURPOSE	DATE	CKD
1	LE	50% DESIGN	09/14/18	DL
2	LE	90% DESIGN	10/26/18	DL
3	LE	BID	12/26/18	DL
4	LE	CONSTRUCTION	2/15/19	DL

SCALE: AS INDICATED

DATE: FEBRUARY 15, 2019

DRAWN BY: KV

CHECKED BY: JA

FAA AIP NO:

WORK BREAKDOWN NO.

DESIGN CONTRACT NO. 201735882

CONST. CONTRACT NO. 201846271

VOLUME NO.

SHEET TITLE

ELECTRICAL NEW PLAN (24 OF 29)

SHEET NO. EL124

244 OF 396

CADD FILE NO. _201735882-B1EELP-1220

D:\dropbox (lean photometrics)\active projects\15718010 rah den 17r-35l reconstruction\01 drawings\working drawings\Sheets_201735882-B1EELP-1220.dwg Feb 12, 2019 - 5:18pm Kat

NOTES:

1. SEE SHEETS E-001 & EL001 FOR GENERAL ELECTRICAL NOTES AND LEGEND.

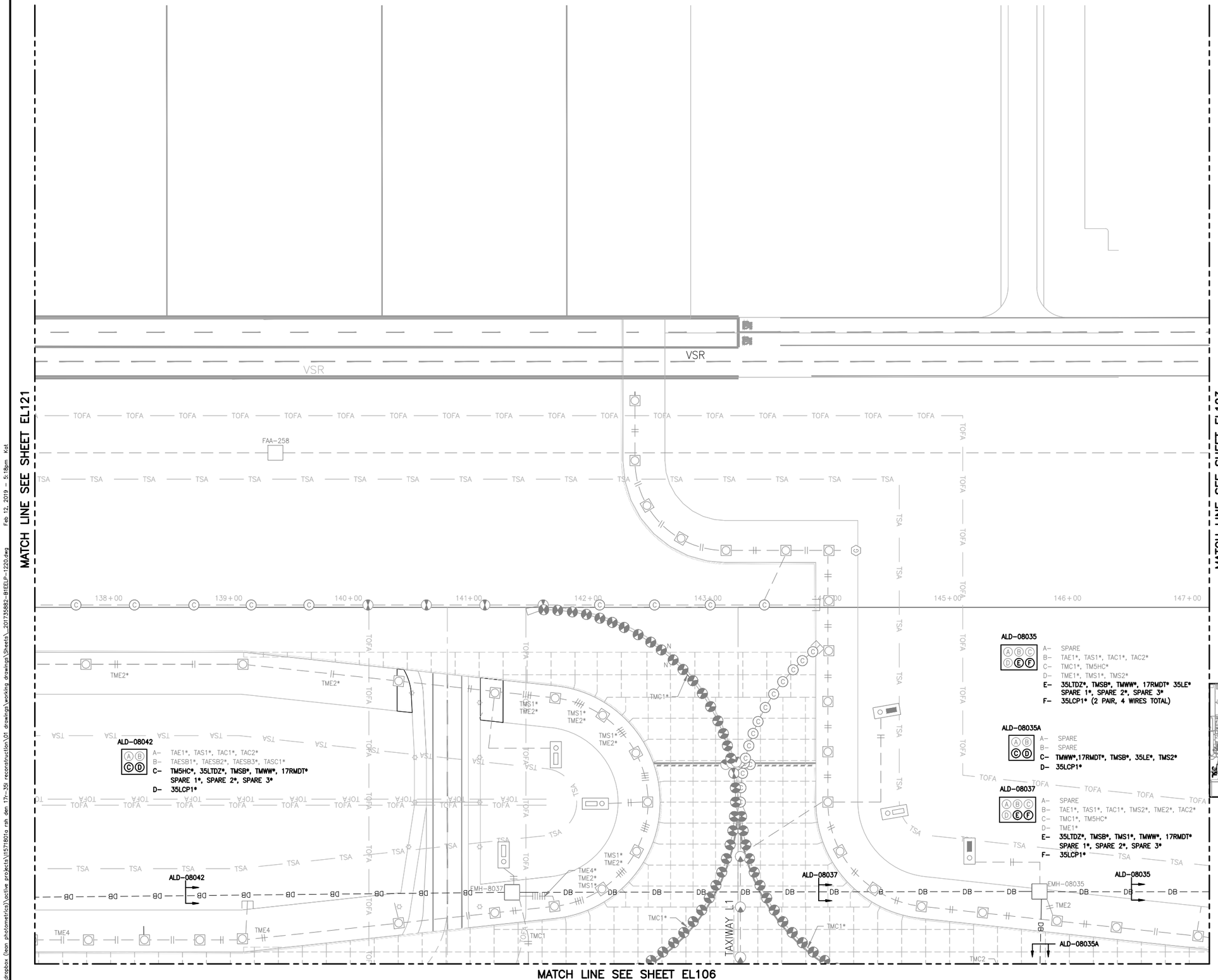

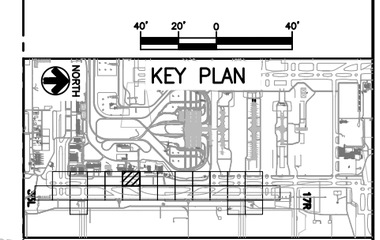

COLORADO LICENSED
BARON LEAN
52246
2/15/19
PROFESSIONAL ENGINEER

CITY & COUNTY of DENVER

DENVER INTERNATIONAL AIRPORT

LEAN ENGINEERING

RUNWAY 17R-35L COMPLEX PAVEMENT REHABILITATION PACKAGE 1

ISSUE RECORD

NO.	BY	PURPOSE	DATE	CKD
1	LE	50% DESIGN	09/14/18	DL
2	LE	90% DESIGN	10/26/18	DL
3	LE	BID	12/26/18	DL
4	LE	CONSTRUCTION	2/15/19	DL

SCALE: AS INDICATED

DATE: FEBRUARY 15, 2019

DRAWN BY: KV

CHECKED BY: JA

FAA AIP NO:

WORK BREAKDOWN NO.

DESIGN CONTRACT NO. 201735882

CONST. CONTRACT NO. 201846271

VOLUME NO.

SHEET TITLE: ELECTRICAL NEW PLAN (22 OF 29)

SHEET NO. EL122

245 OF 396

CADD FILE NO. _201735882-B1EELP-1220

D:\dropbox (lean photometrics)\active projects\157180\a rah den 17r-35l reconstruction\01 drawings\working drawings\Sheets_201735882-B1EELP-1220.dwg Feb 12, 2019 - 5:18am Kat

NOTES:

1. SEE SHEETS E-001 & EL001 FOR GENERAL ELECTRICAL NOTES AND LEGEND.

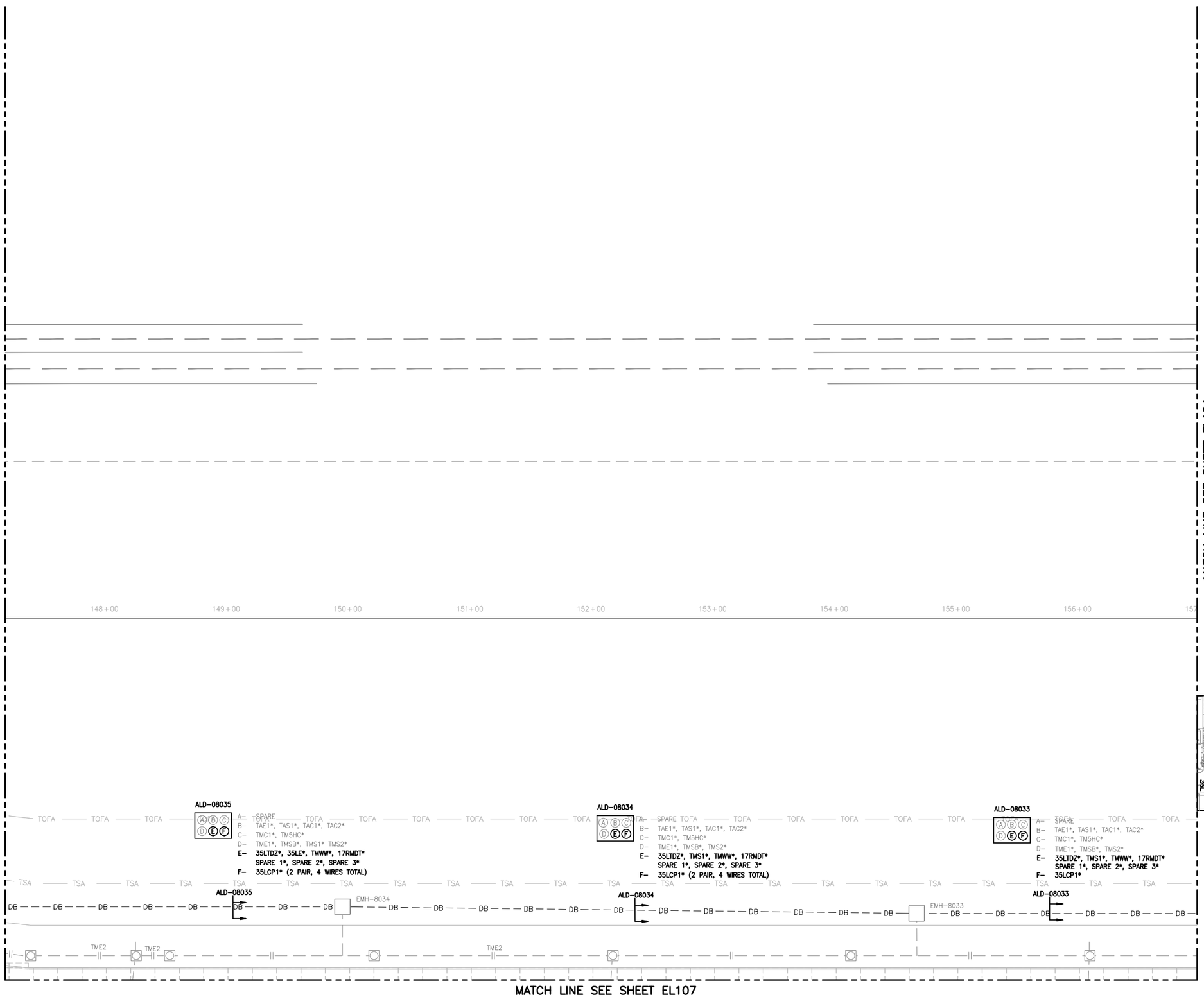

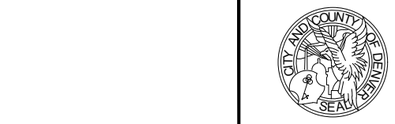

NORTH

40' 20' 0 40'

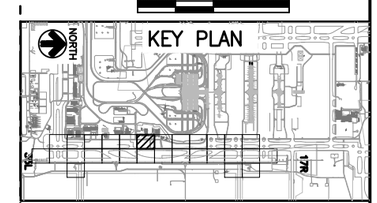

CITY & COUNTY of DENVER

DENVER INTERNATIONAL AIRPORT

LEAN ENGINEERING

RUNWAY 17R-35L COMPLEX PAVEMENT REHABILITATION PACKAGE 1

ISSUE RECORD

NO.	BY	PURPOSE	DATE	CKD
1	LE	50% DESIGN	09/14/18	DL
2	LE	90% DESIGN	10/26/18	DL
3	LE	BID	12/26/18	DL
4	LE	CONSTRUCTION	2/15/19	DL

SCALE: AS INDICATED

DATE: FEBRUARY 15, 2019

DRAWN BY: KV

CHECKED BY: JA

FAA AIP NO:

WORK BREAKDOWN NO.

DESIGN CONTRACT NO. 201735882

CONST. CONTRACT NO. 201846271

VOLUME NO.

SHEET TITLE

ELECTRICAL NEW PLAN (23 OF 29)

SHEET NO. EL123

246 OF 396

CADD FILE NO. _201735882-B1EELP-1220

D:\dropbox (lean photometrics)\active projects\1571801a rah den 17r-35l reconstruction\01 drawings\working drawings\Sheets_201735882-B1EELP-1220.dwg Feb 12, 2019 - 5:18pm Kat

NOTES:

1. SEE SHEETS E-001 & EL001 FOR GENERAL ELECTRICAL NOTES AND LEGEND.

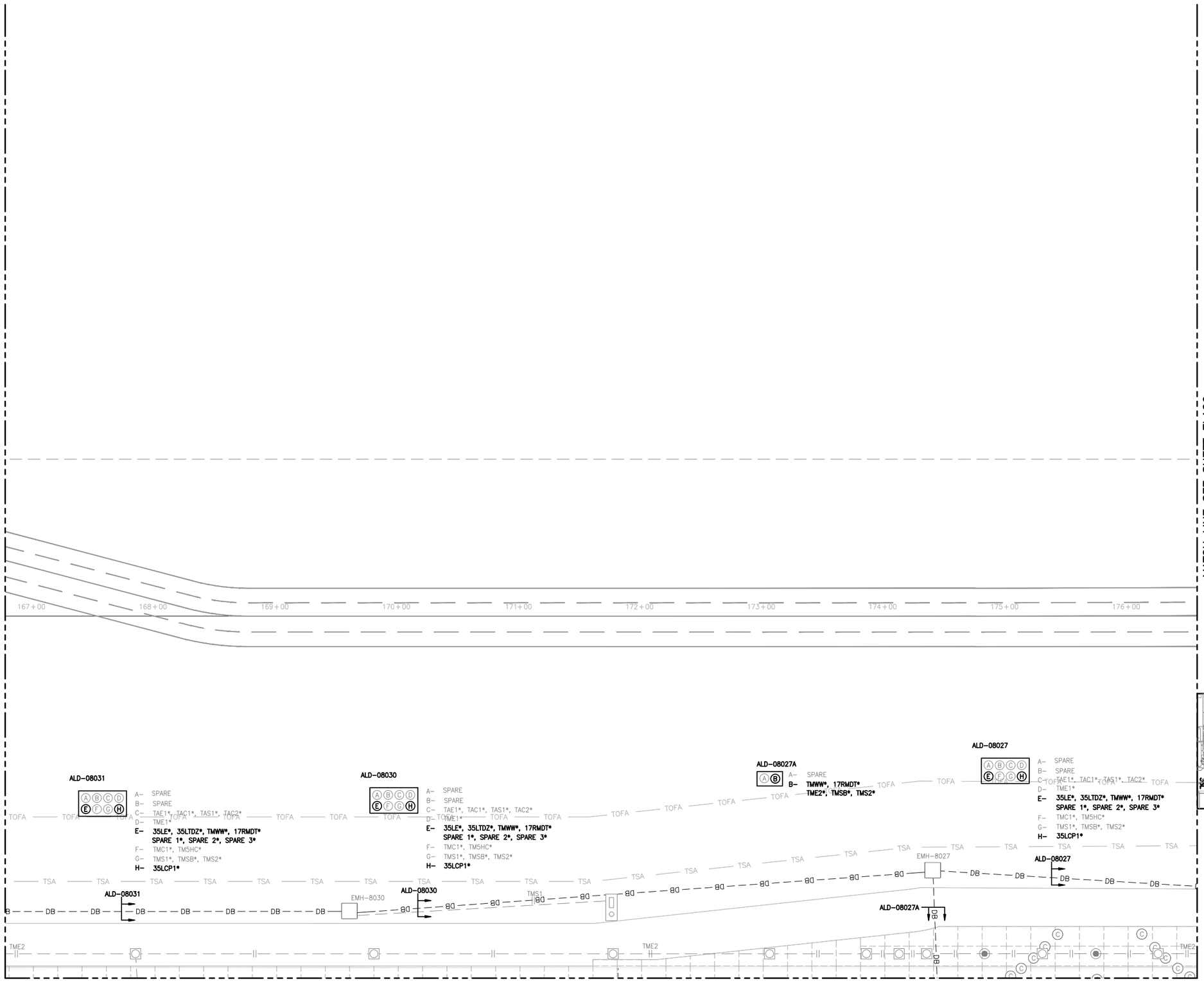

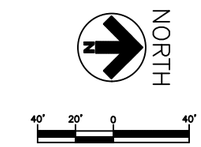

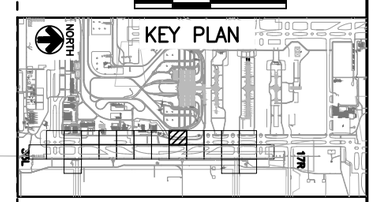

COLORADO LICENSED
AARON LEAN
52246
2/15/19
PROFESSIONAL ENGINEER

CITY & COUNTY of DENVER

DENVER INTERNATIONAL AIRPORT

LEAN ENGINEERING

RUNWAY 17R-35L COMPLEX PAVEMENT REHABILITATION PACKAGE 1

ISSUE RECORD

NO.	BY	PURPOSE	DATE	CKD
1	LE	50% DESIGN	09/14/18	DL
2	LE	90% DESIGN	10/26/18	DL
3	LE	BID	12/26/18	DL
4	LE	CONSTRUCTION	2/15/19	DL

SCALE: AS INDICATED

DATE: FEBRUARY 15, 2019

DRAWN BY: KV

CHECKED BY: JA

FAA AIP NO:

WORK BREAKDOWN NO.

DESIGN CONTRACT NO. 201735882

CONST. CONTRACT NO. 201846271

VOLUME NO.

SHEET TITLE: ELECTRICAL NEW PLAN (25 OF 29)

SHEET NO. EL125

247 OF 396

CADD FILE NO. _201735882-B1EELP-1220

D:\dropbox (lean photometrics)\active projects\1571801a rah den 17r-35l reconstruction\01 drawings\working drawings\Sheets_201735882-B1EELP-1220.dwg Feb 12, 2019 - 5:18pm Kat

NOTES:

1. SEE SHEETS E-001 & EL001 FOR GENERAL ELECTRICAL NOTES AND LEGEND.

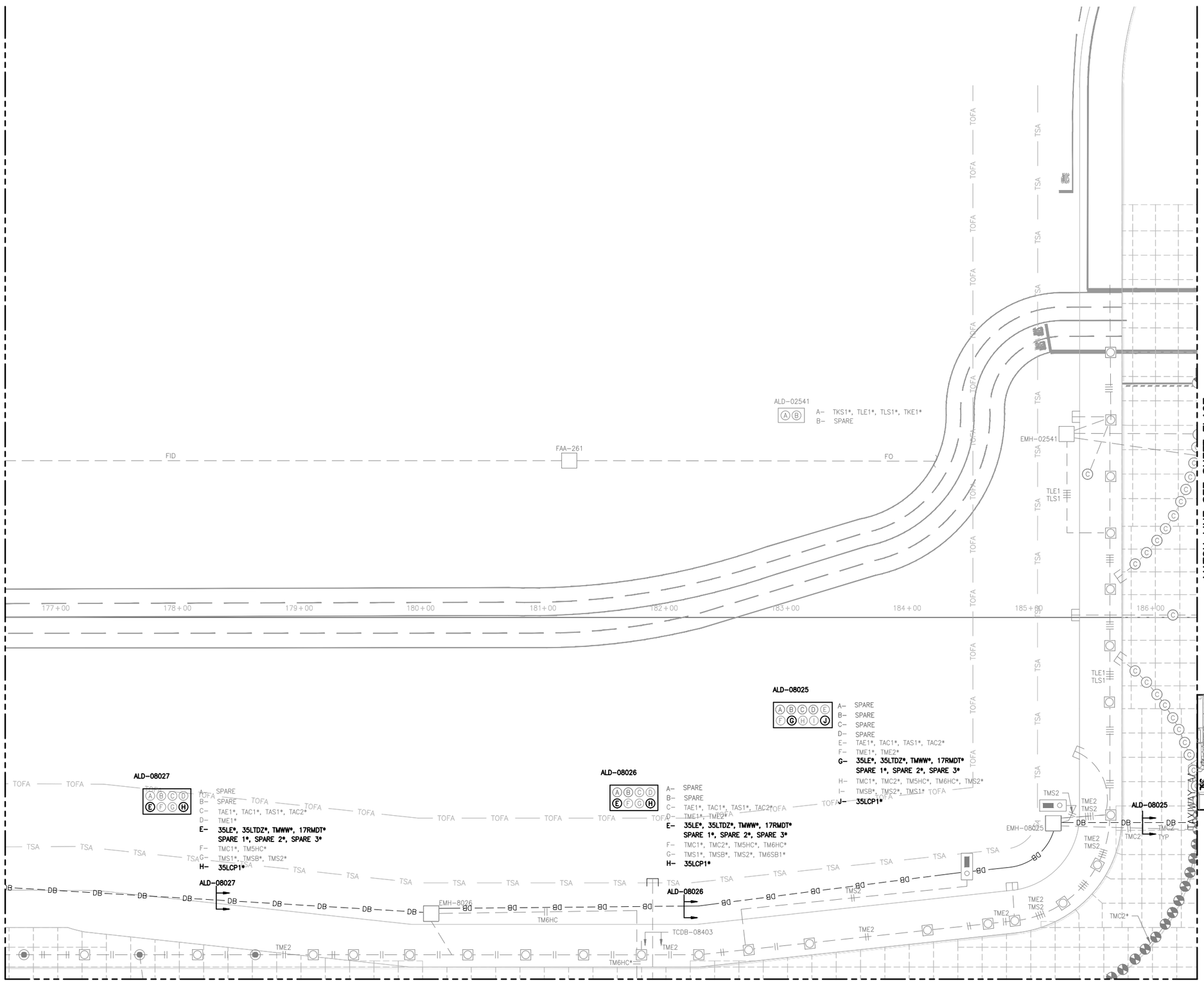

CITY & COUNTY of DENVER

DENVER INTERNATIONAL AIRPORT

LEAN ENGINEERING

RUNWAY 17R-35L COMPLEX PAVEMENT REHABILITATION PACKAGE 1

ISSUE RECORD

NO.	BY	PURPOSE	DATE	CKD
1	LE	50% DESIGN	09/14/18	DL
2	LE	90% DESIGN	10/26/18	DL
3	LE	BID	12/26/18	DL
4	LE	CONSTRUCTION	2/15/19	DL

SCALE: AS INDICATED

DATE: FEBRUARY 15, 2019

DRAWN BY: KV

CHECKED BY: JA

FAA AIP NO:

WORK BREAKDOWN NO.

DESIGN CONTRACT NO. 201735882

CONST. CONTRACT NO. 201846271

VOLUME NO.

SHEET TITLE: ELECTRICAL NEW PLAN (26 OF 29)

SHEET NO. EL126

248 OF 396

CADD FILE NO. _201735882-B1EELP-1220

COLORADO LICENSED HURON LEAN 52246 2/15/19 PROFESSIONAL ENGINEER

D:\dropbox (lean photometrics)\active projects\1157180ia rab den 17r-35l reconstruction\01 drawings\working drawings\Sheets_201735882-B1EELP-1220.dwg Feb 12, 2019 - 5:19pm Kat

NOTES:

1. SEE SHEETS E-001 & EL001 FOR GENERAL ELECTRICAL NOTES AND LEGEND.

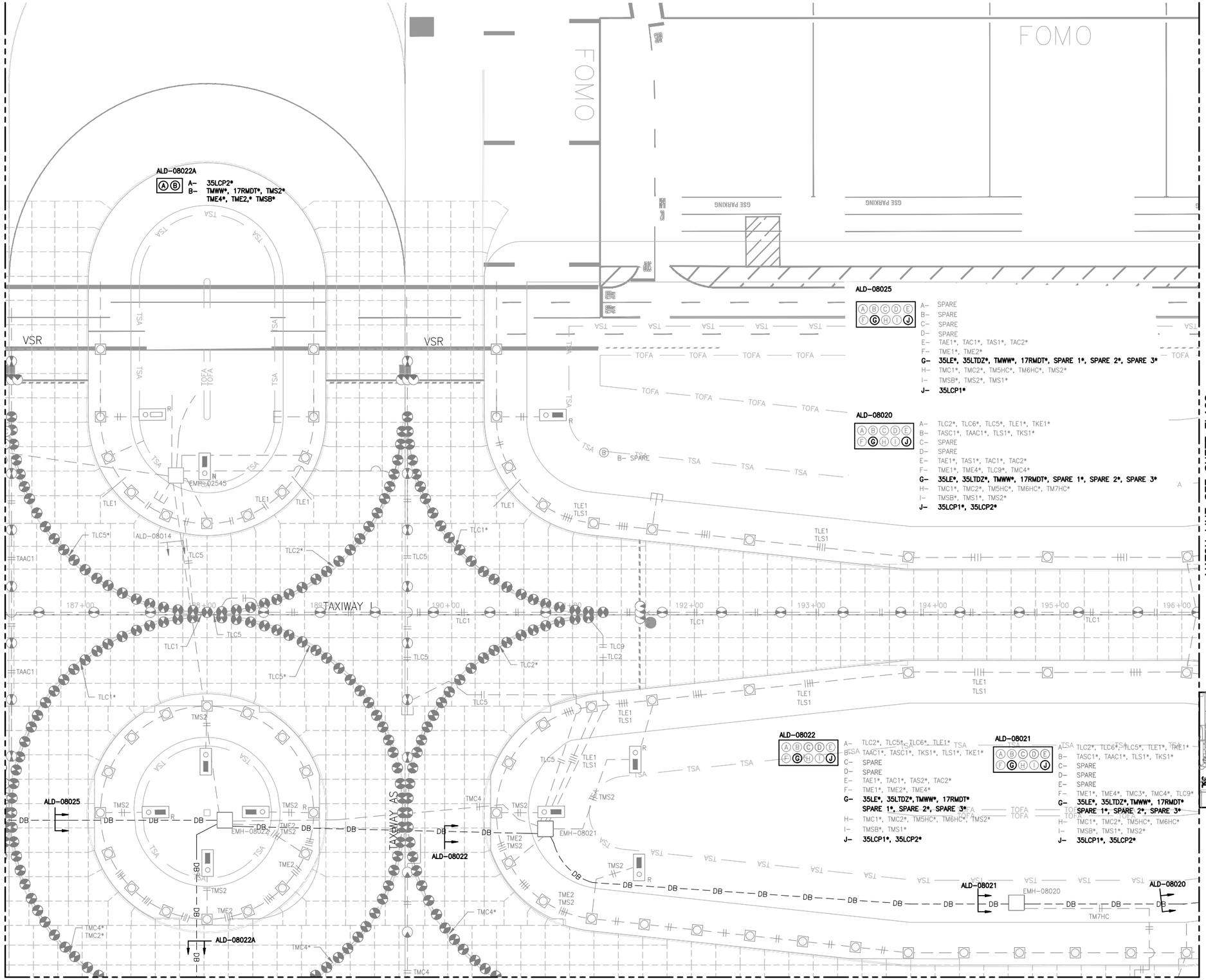

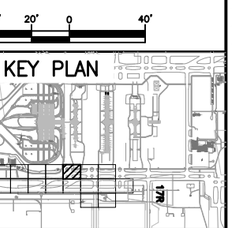

COLORADO LICENSED
DIXON LEAN
52246
2/15/19
PROFESSIONAL ENGINEER

CITY & COUNTY of DENVER

DENVER INTERNATIONAL AIRPORT

LEAN ENGINEERING

RUNWAY 17R-35L COMPLEX PAVEMENT REHABILITATION PACKAGE 1

ISSUE RECORD

NO.	BY	PURPOSE	DATE	CKD
1	LE	50% DESIGN	09/14/18	DL
2	LE	90% DESIGN	10/26/18	DL
3	LE	BID	12/26/18	DL
4	LE	CONSTRUCTION	2/15/19	DL

SCALE: AS INDICATED

DATE: FEBRUARY 15, 2019

DRAWN BY: KV

CHECKED BY: JA

FAA AIP NO:

WORK BREAKDOWN NO.

DESIGN CONTRACT NO. 201735882

CONST. CONTRACT NO. 201846271

VOLUME NO.

SHEET TITLE

ELECTRICAL NEW PLAN (27 OF 29)

SHEET NO. EL127

249 OF 396

CADD FILE NO. _201735882-B1EELP-1220

D:\dropbox (lean photometrics)\active projects\1571801a rsk den 17r-35l reconstruction\01 drawings\working drawings\Sheets_201735882-B1EELP-1220.dwg Feb 12, 2019 - 5:19pm Kat

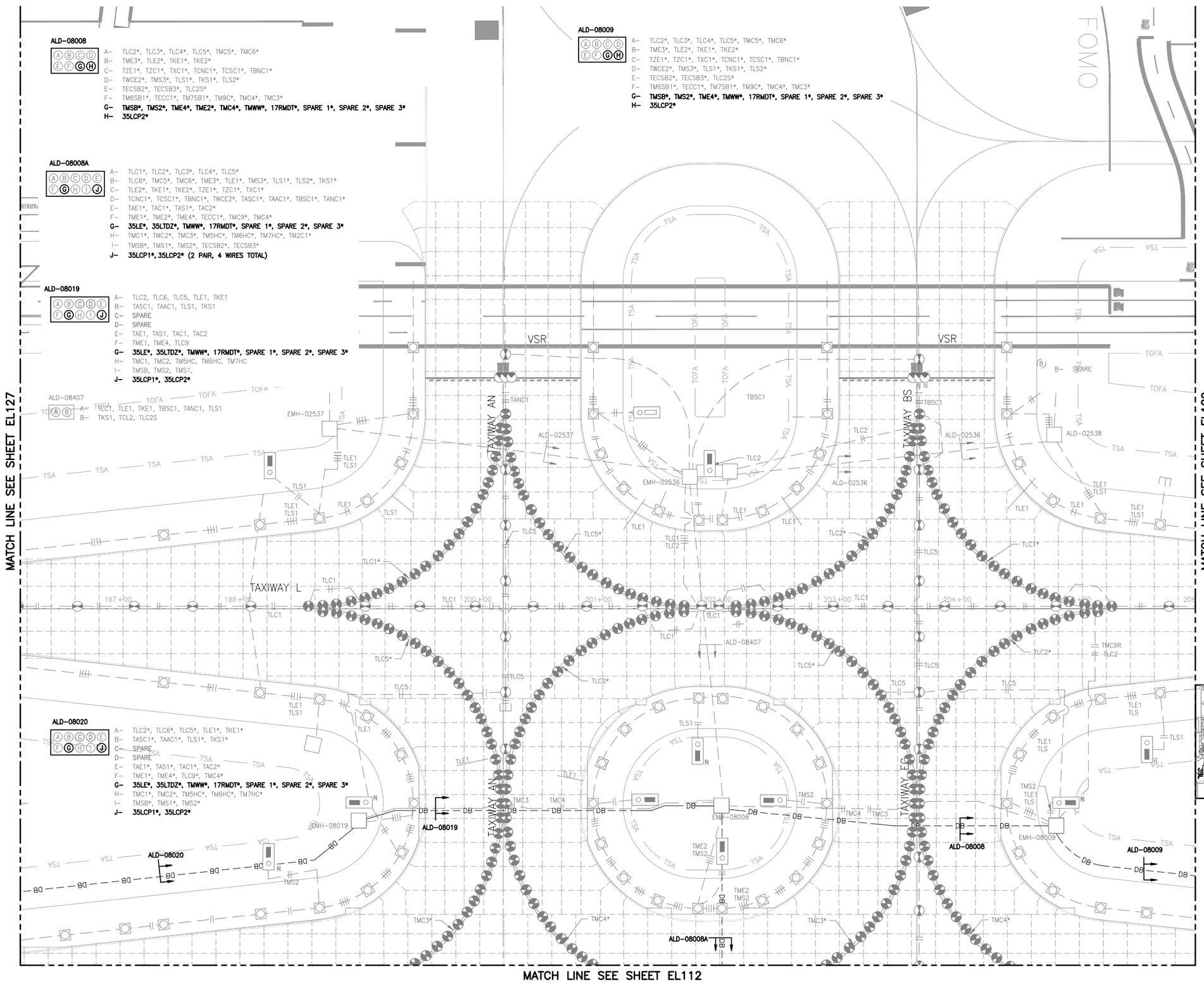

NOTES:

1. SEE SHEETS E-001 & EL001 FOR GENERAL ELECTRICAL NOTES AND LEGEND.

CITY & COUNTY of DENVER

DENVER INTERNATIONAL AIRPORT

LEAN ENGINEERING

RUNWAY 17R-35L COMPLEX PAVEMENT REHABILITATION PACKAGE 1

ISSUE RECORD

NO.	BY	PURPOSE	DATE	CKD
1	LE	50% DESIGN	09/14/18	DL
2	LE	90% DESIGN	10/26/18	DL
3	LE	BID	12/26/18	DL
4	LE	CONSTRUCTION	2/15/19	DL

SCALE: AS INDICATED

DATE: FEBRUARY 15, 2019

DRAWN BY: KV

CHECKED BY: JA

FAA AIP NO:

WORK BREAKDOWN NO.

DESIGN CONTRACT NO. 201735882

CONST. CONTRACT NO. 201846271

VOLUME NO.

SHEET TITLE

ELECTRICAL NEW PLAN (28 OF 29)

SHEET NO. EL128

250 OF 396

CADD FILE NO. _201735882-B1EELP-1220

COLORADO LICENSED DORON LEAN 52246 2/15/19 PROFESSIONAL ENGINEER

D:\dropbox (lean photometrics)\active projects\1571801a rah den 17r-35l reconstruction\01 drawings\working drawings\Sheets_201735882-B1EELP-1220.dwg Feb 12, 2019 - 5:19pm Kat

NOTES:

1. SEE SHEETS E-001 & EL001 FOR GENERAL ELECTRICAL NOTES AND LEGEND.

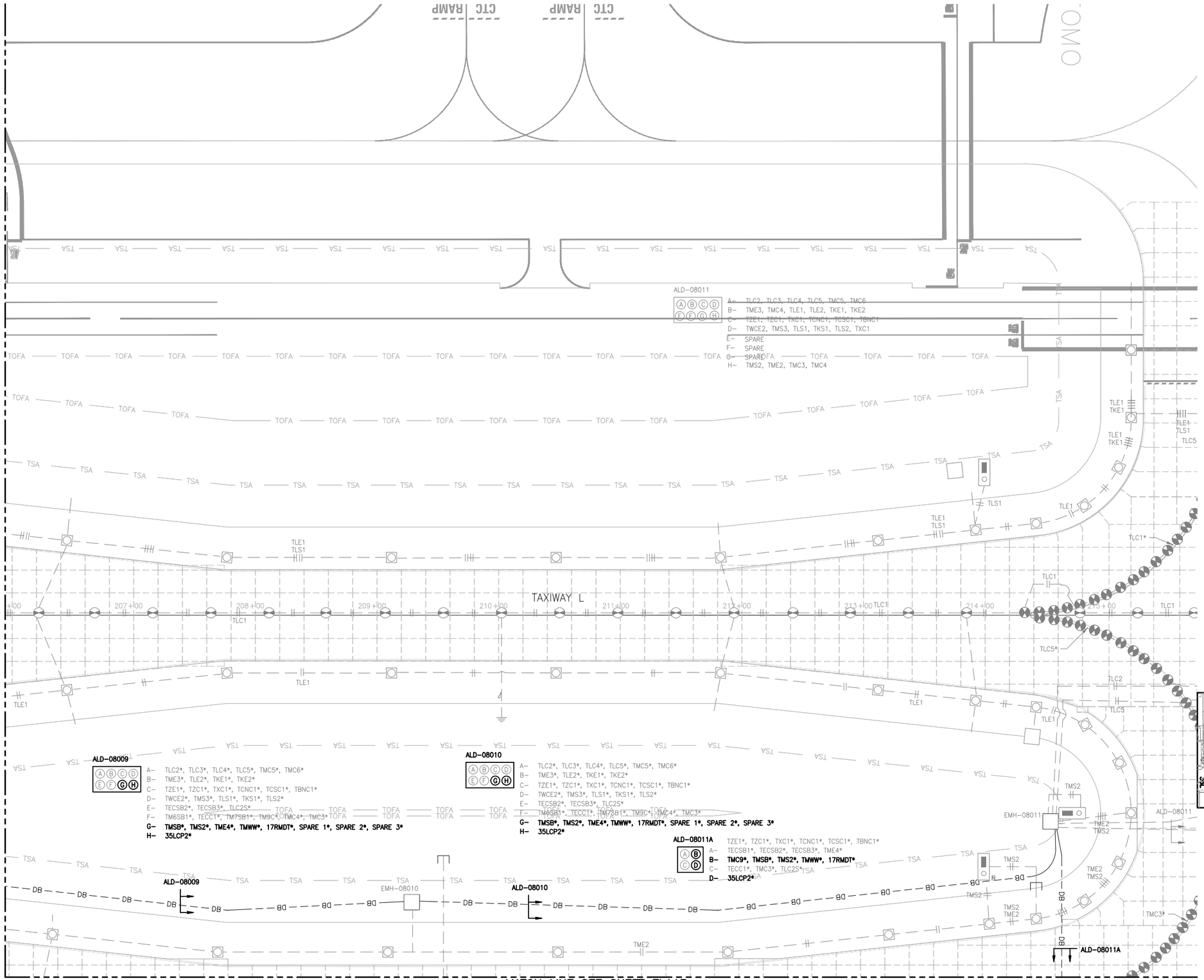

CITY & COUNTY of DENVER

DENVER INTERNATIONAL AIRPORT

LEAN ENGINEERING

RUNWAY 17R-35L COMPLEX PAVEMENT REHABILITATION PACKAGE 1

ISSUE RECORD

NO.	BY	PURPOSE	DATE	CKD
1	LE	50% DESIGN	09/14/18	DL
2	LE	90% DESIGN	10/26/18	DL
3	LE	BID	12/26/18	DL
4	LE	CONSTRUCTION	2/15/19	DL

SCALE: AS INDICATED

DATE: FEBRUARY 15, 2019

DRAWN BY: KV

CHECKED BY: JA

FAA AIP NO:

WORK BREAKDOWN NO.

DESIGN CONTRACT NO. 201735882

CONST. CONTRACT NO. 201846271

VOLUME NO.

SHEET TITLE

ELECTRICAL NEW PLAN (29 OF 29)

SHEET NO. EL129

251 OF 396

CADD FILE NO. _201735882-B1EELP-1220

COLORADO LICENSED PROFESSIONAL ENGINEER DORON LEAN 52246 2/15/19

D:\dropbox (lean photometrics)\active projects\1517180ia rah den 17r-35l reconstruction\01 drawings\working drawings\Sheets_201735882-B1EELP-1220.dwg Feb 12, 2019 - 5:20pm Kat

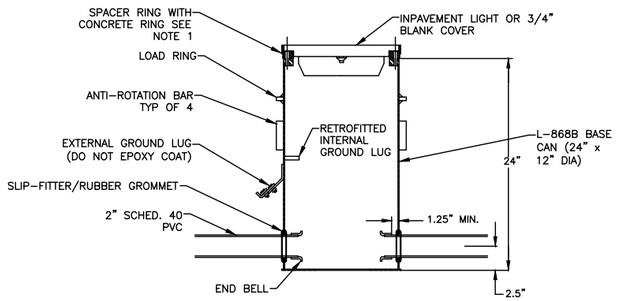

NOTE:
AT THICKENED CONCRETE PANEL EDGES AS SHOWN ON DRAWING, INSTALL 26" DEEP BASE CANS AT NO ADDITIONAL COST.

1 / – TYPICAL L-868B 24" DEEP BASE CAN
NOT TO SCALE

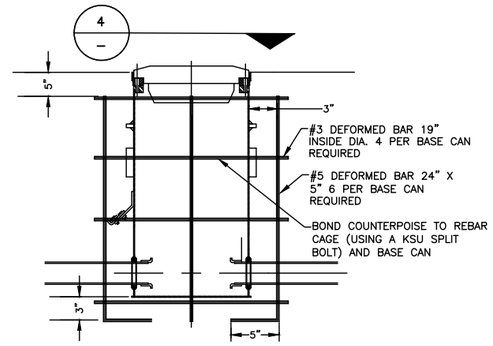

2 / – REBAR DETAIL FOR ALL L-868B BASE CANS
NOT TO SCALE

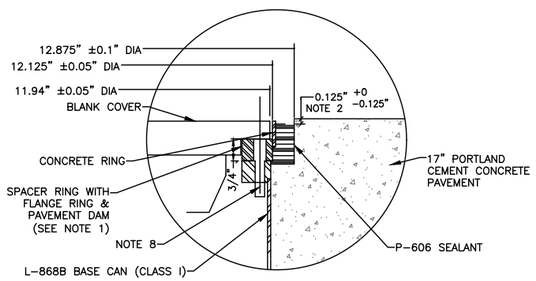

3 / – DETAIL
NOT TO SCALE

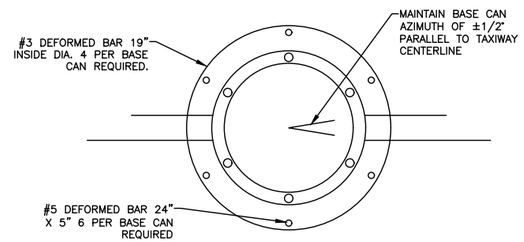

4 / – SECTION
NOT TO SCALE

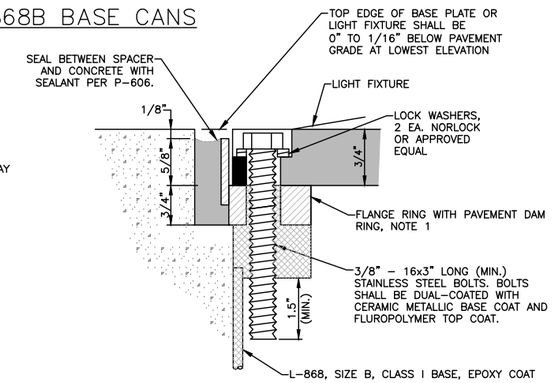

5 / – DETAIL A
NOT TO SCALE

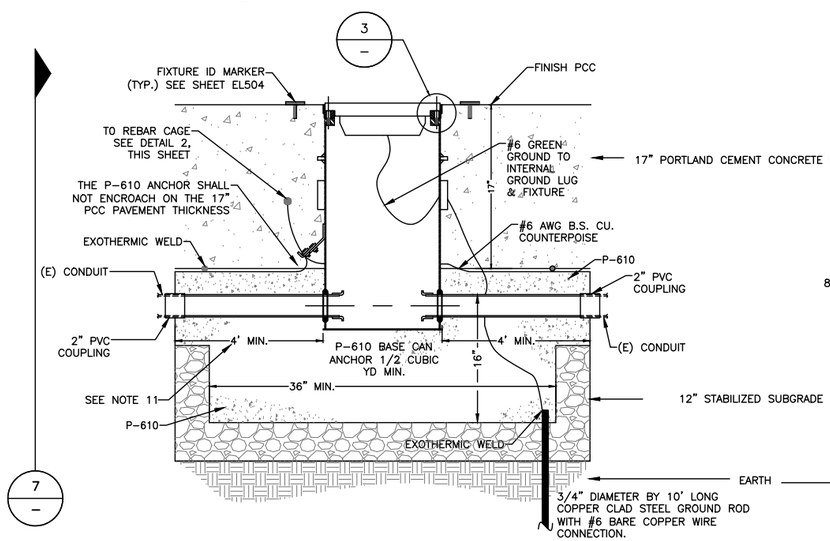

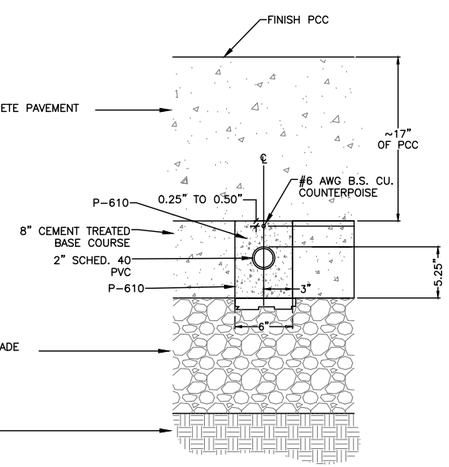

6 / – TYPICAL INSTALLATION DETAIL FOR NEW OR REINSTALLED INPAVEMENT FIXTURE ON NEW L-868B BASE CAN IN NEW PAVEMENT
NOT TO SCALE

NOTES:

* CONTRACTOR SHALL EXCAVATE AS REQUIRED TO REMOVE EXISTING BASE CAN

7 / – CONDUIT INSTALLATION IN NEW PANEL (SECTION)
NOT TO SCALE

NOTES:

1. SEE SHEETS E-001 FOR GENERAL ELECTRICAL NOTES.

SHEET NOTES:

1. THE SPACER RING IS DESIGNED AS A NOMINAL 0.75" THICKNESS. THE SPACER RING MAY BE REQUIRED TO BE THINNER OR THICKER DEPENDING ON BASE CAN INSTALLATION AND PAVING TECHNIQUES. THIS CONTRACTOR SHALL BE RESPONSIBLE TO MEASURE AND DETERMINE THE EXACT REQUIRED THICKNESS OF EACH INDIVIDUAL SPACER RING REQUIRED TO PUT THE AIRFIELD LIGHTING FIXTURE AT THE CORRECT ELEVATION, AZIMUTH AND ROTATION PER FAA ADVISORY CIRCULAR 150/5345-46 LATEST EDITION. THE CONTRACTOR'S BID PRICE SHALL INCLUDE FURNISHING AND INSTALLING ALL SPACER RINGS. BASE CANS, SPACER RINGS AND FLANGE RING SHALL BE GALVANIZED. EPOXY COATING NOT REQUIRED.
2. THE P-606 SEALER SHALL FILL THE VOID TO WITHIN 0.125" OF THE TOP EDGE OF THE CONCRETE RING AT THE LOWEST CONCRETE ELEVATION. ANY OVER POURS SHALL BE REPLACED BY THE CONTRACTOR AT THEIR EXPENSE.
3. ALL BASE CAN INSTALLATION TECHNIQUES, METHODS, MATERIALS, ETC. SHALL BE SUBMITTED TO THE ENGINEER FOR REVIEW AND APPROVAL PRIOR TO THE START OF WORK.
4. IMMEDIATELY AFTER THE HOLES ARE CORED IN THE CEMENT TREATED BASE COURSE, THE BASE CANS SHALL BE INSTALLED AND THE P-610 PLACED SO AS TO PREVENT WATER FORM ENTERING THE STABILIZED SUBGRADE.
5. BEFORE PAVING MAY PROCEED, THE CONTRACTOR SHALL DEMONSTRATE TO THE DIA PROJECT MANAGER BY SURVEY THAT THE BASE CANS ARE AT THE CORRECT ELEVATION, AZIMUTH AND ROTATION AND THAT THE PROPER CLEARANCE EXISTS BETWEEN THE BASE CAN AND THE PAVING TRAIN.
6. THE FINISHED PAVEMENT SURFACE SHALL BE PROTECTED FROM FOREIGN SUBSTANCES WHICH WOULD CAUSE STAINING, I.E.. OIL, P-605, ETC. THE CONTRACTOR SHALL IMMEDIATELY CLEAN ALL SPILLS AND CORRECT/CLEAN ANY STAINED SURFACES AT THE CONTRACTORS EXPENSE.
7. USE ACETATE RESISTANT, CONDUCTIVE SEALANT BETWEEN ADAPTER/SPACE RINGS. ALSO, USE BETWEEN ADAPTER/SPACER RING AND BASE CAN. DO NOT INSTALL EXCESSIVE AMOUNTS OF SEALANT. THE SEALANT SHALL NOT ACT A BARRIER BETWEEN THE SPACER RING(S) AND BASE CAN AND ADAPTER RING AND FLANGE RING. METAL TO METAL CONTACT SHALL BE MAINTAINED BETWEEN THE BASE CAN, SPACER RING(S) AND ADAPTER RING AND FLANGE RING.
8. THE FIXTURE MOUNTING BOLTS SHALL EXTEND THROUGH THE BASE CAN MOUNTING FLANGE INTO THE BASE CAN A MINIMUM OF 1 1/2". THE BOLTS SHALL HAVE ENOUGH THREAD LENGTH SO THEY DO NOT SHOULDER OUT BEFORE THE FIXTURE IS SECURELY TIGHTENED. THE BOLTS SHALL BE TORQUE PER THE MANUFACTURERS RECOMMENDATIONS. THE BOLTS SHALL BE SUPPLIED WITH CEC LOCK WASHERS.
9. THE NUMBER OF HUBS FOR A BASE CAN SHALL BE AS SHOWN ON THE PLANS.
10. BACKFILL UNDER TURF SHALL BE NATIVE MATERIAL COMPACTED PER P-152. BACKFILL UNDER PAVED AREAS SHALL BE FLOWABLE FILL (P-162) WITH RED DYE.
11. IF 4' REQUIRES REMOVAL OF ANOTHER PANEL, CONTRACTOR MAY FIELD ADJUST TRENCH TO ALLOW FOR CONDUIT PER DENVER CONTRACT MANAGER.

COLORADO LICENSED
AARON LEA
52246
2/15/19
PROFESSIONAL ENGINEER

CITY & COUNTY of DENVER
DENVER INTERNATIONAL AIRPORT

LEAN ENGINEERING

RUNWAY 17R-35L COMPLEX PAVEMENT REHABILITATION PACKAGE 1

ISSUE RECORD

NO.	BY	PURPOSE	DATE	CKD
1	LE	50% DESIGN	09/14/18	DL
2	LE	90% DESIGN	10/26/18	DL
3	LE	BID	12/26/18	DL
4	LE	ADDENDUM 2	1/17/19	DL
5	LE	CONSTRUCTION	2/15/19	DL

SCALE: AS INDICATED
DATE: FEBRUARY 15, 2019
DRAWN BY: KV
CHECKED BY: JA
FAA AIP NO:
WORK BREAKDOWN NO.
DESIGN CONTRACT NO. 201735882
CONST. CONTRACT NO. 201846271
VOLUME NO.
SHEET TITLE: ELECTRICAL DETAIL 1
SHEET NO. EL501
252 OF 396
CADD FILE NO. _201735882-B1EELD-5249

D:\dropbox (lean photometrics)\active projects\1571801a rah den 17r-35l reconstruction\01 drawings\working drawings\Sheets_201735882-B1EELD-5249.dwg Feb 12, 2019 - 5:20pm Kat

NOTES:

1. SEE SHEETS E-001 & EL001 FOR GENERAL ELECTRICAL NOTES AND LEGEND.

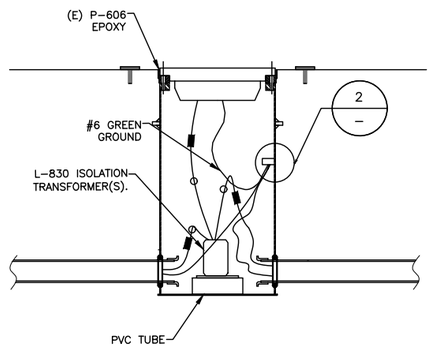

NOTES:

1. CONTRACTOR MUST CORE AND REMOVE (E) EPOXY & SPACER PACKAGE. REFER TO DETAIL(S) ON EL503. ASSUME 14" CORE FOR BIDDING BUT CONFIRM EXISTING EPOXY WIDTH OF EACH CAN, EXISTING DIMENSION SHOULD BE APPROXIMATELY 3/8". REMOVE SPACER RINGS AND FLANGE RING.
2. INSTALL (N) TRANSFORMER, (N) SPACER RINGS, (N) CABLE, AND ALL ACCESSORIES.
3. CONTRACTOR MUST ASSUME THAT AS LEAST (2) (N) SPACER RINGS AND ONE SPACER RING WITH PAVEMENT DAM SHALL BE INSTALLED. (USE THESE QUANTITIES FOR BIDDING PURPOSES). CONTRACTOR SHALL BE RESPONSIBLE FOR MAKING SURE FIXTURE ELEVATION IS CORRECT AND PASSING PHOTOMETERICS.
4. INSTALL (N) #6 GREEN GROUND WIRE BETWEEN LIGHT FIXTURE AND BASE CAN. IF REQUIRED RETROFIT BASE CAN WITH GROUND LUG AS PER DETAIL 2 THIS SHEET. ASSUME EACH LIGHT NEEDS RETROFITTING FOR BIDDING PURPOSES.

1 / – NEW OR REINSTALLED INPAVEMENT LIGHT ON EXISTING BASE CAN

NOT TO SCALE

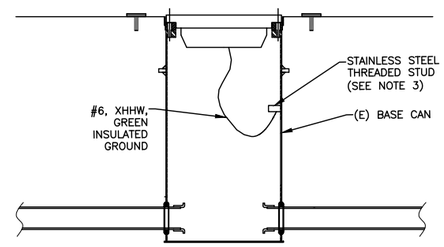

NOTES:

1. LENGTH OF #6 INSULATED GROUND CONDUCTOR SHALL BE OF SUFFICIENT LENGTH TO ALLOW THE INSET LIGHT FIXTURE OR BASE PLATE TO BE EASILY SET ASIDE WITHOUT REMOVAL.
2. VACUUM OUT ANY DEBRIS AND METAL SHAVINGS FROM THE BOTTOM OF THE CAN.
3. INSTALL A 3/8" STAINLESS STEEL THREADED STUD BY MEANS OF AN ARC STUD WELDING GUN, HBS A12 OR APPROVED EQUAL. AFTER WELDING THE STUD, THE CONTRACTOR SHALL COLD GALVANIZE THE INSIDE WALL OF THE BASE CAN AROUND THE STUD WELD. INSTALL COMPRESSION TERMINAL ON XHHW TO CONNECT TO STUD. PROVIDE BURNDY YA6CTC38 OR APPROVED EQUAL.
4. CONTRACTOR SHALL ASSUME THAT ALL BASE CANS REQUIRE GROUND LUG RETROFIT. COST FOR THIS WORK SHALL BE INCIDENTAL TO THE CONTRACT WITH NO SEPARATE PAYMENT.

2 / – RETROFIT EXISTING BASE CAN DETAIL

NOT TO SCALE

COLORADO LICENSED
DORON LEAN
52246
2/15/19
PROFESSIONAL ENGINEER

CITY & COUNTY of DENVER

DENVER INTERNATIONAL AIRPORT

LEAN ENGINEERING

RUNWAY 17R-35L COMPLEX PAVEMENT REHABILITATION PACKAGE 1

ISSUE RECORD

NO.	BY	PURPOSE	DATE	CKD
1	LE	50% DESIGN	09/14/18	DL
2	LE	90% DESIGN	10/26/18	DL
3	LE	BID	12/26/18	DL
4	LE	CONSTRUCTION	2/15/19	DL

SCALE: AS INDICATED

DATE: FEBRUARY 15, 2019

DRAWN BY: KV

CHECKED BY: JA

FAA AIP NO:

WORK BREAKDOWN NO.

DESIGN CONTRACT NO. 201735882

CONST. CONTRACT NO. 201846271

VOLUME NO.

SHEET TITLE: ELECTRICAL DETAIL 2

SHEET NO. EL502

CADD FILE NO. _201735882-B1EELD-5249

D:\dropbox (lean photometrics)\active projects\1157180ia rah den 17r-35l reconstruction\01 drawings\working drawings\Sheets_201735882-B1EELD-5249.dwg Feb 12, 2019 - 5:20pm Kat

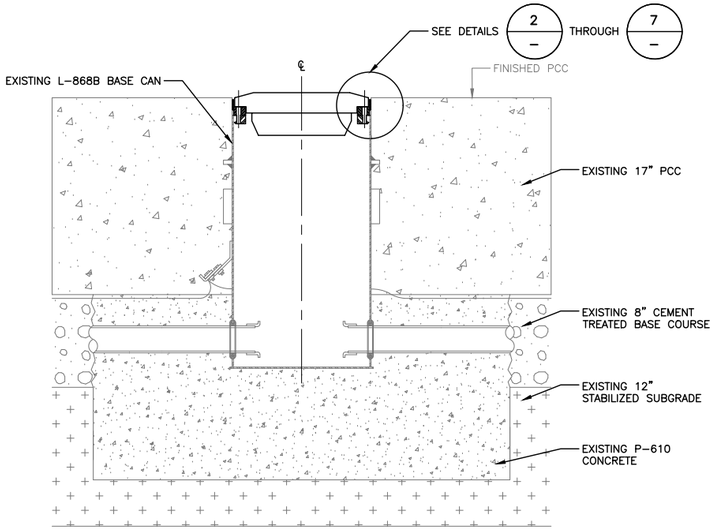

1 REPAIR OF EPOXY SEALANT AROUND LIGHT CANS
NOT TO SCALE

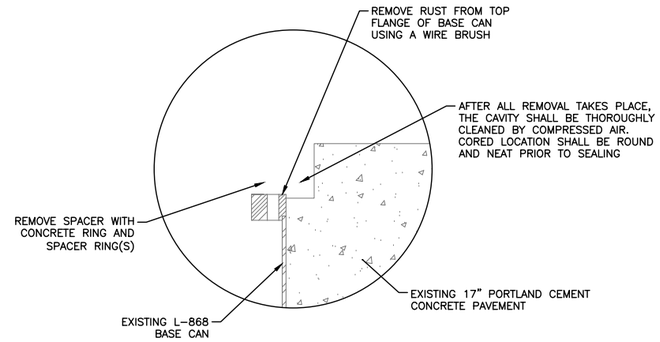

4 EPOXY REMOVAL (STEP 3) DETAIL
NOT TO SCALE

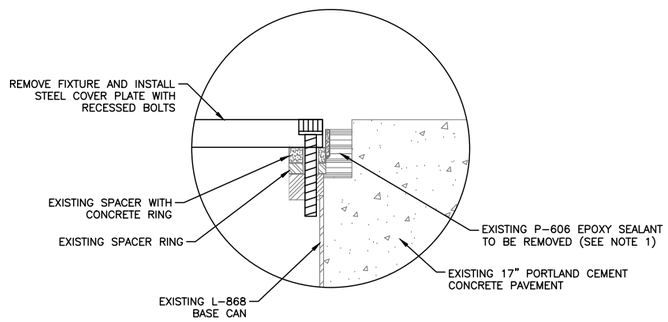

2 EPOXY REMOVAL (STEP 1) DETAIL
NOT TO SCALE

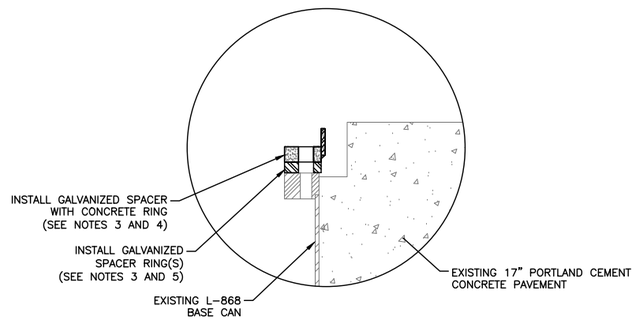

5 EPOXY REMOVAL (STEP 4) DETAIL
NOT TO SCALE

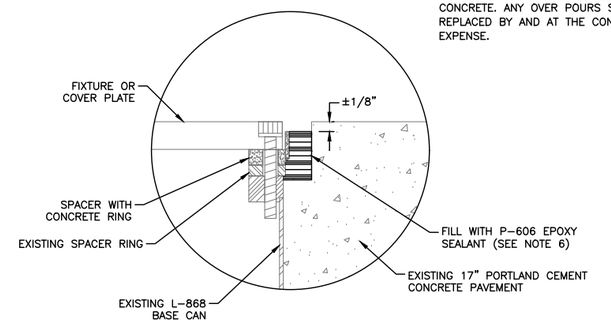

7 EPOXY REMOVAL (STEP 6) DETAIL
NOT TO SCALE

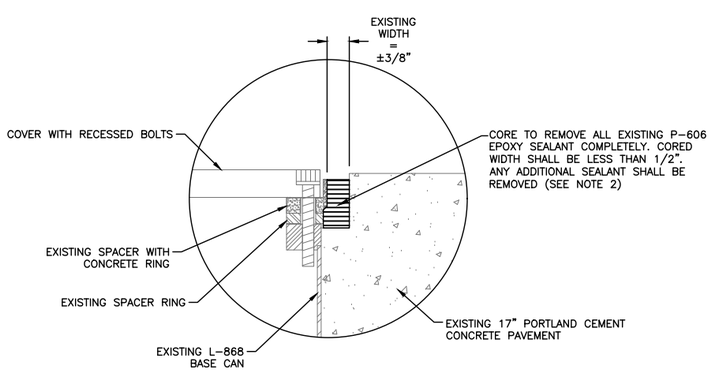

3 EPOXY REMOVAL (STEP 2) DETAIL
NOT TO SCALE

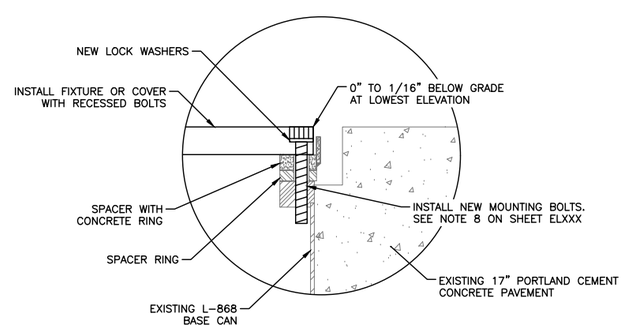

6 EPOXY REMOVAL (STEP 5) DETAIL
NOT TO SCALE

NOTES:

1. SEE SHEETS E-001 FOR GENERAL ELECTRICAL NOTES.

SHEET NOTES:

1. PRIOR TO ANY EPOXY SEALANT REMOVAL, THE CONTRACTOR SHALL COORDINATE WITH THE DEN PROJECT MANAGER FOR LOCATIONS WHERE EPOXY SEALANT AROUND BASE CANS WILL TAKE PLACE.
2. THE CONTRACTOR SHALL USE A TEMPLATE THAT WILL PROTECT EXISTING PAVEMENT TO REMAIN AND SHALL BE APPROVED BY THE DEN PROJECT MANAGER.
3. GALVANIZED STEEL SPACER WITH CONCRETE RING, GASKET O-RING, AND SPACER RING(S) SHALL BE PROVIDED NEW ON BASE CANS WHERE EPOXY REMOVAL TAKES PLACE. WHEN THERE IS LESS THAN 1/4" MINIMUM OF SPACE BETWEEN TOP OF EXISTING BASE CAN FLANGE AND FINISHED GRADE, THE CONTRACTOR WILL BE ALLOWED TO USE A NON-GASKET SPACER WITH CONCRETE RING TO INSTALL THE FIXTURE AT THE PROPER ELEVATION.
4. COAT O-RING WITH DOW CORNING 111 VALVE LUBRICANT AND SEALANT OR APPROVED EQUAL. PLACE DOW CORNING 111 OR APPROVED EQUAL BETWEEN FIXTURE AND FLANGE WITH CONCRETE RING. ALL FLANGE RINGS WITH OR WITHOUT O-RING WILL REQUIRE DOW 111 OR APPROVED EQUAL TO BE APPLIED.
5. PLACE SUREBOND EVERFLEX SB-1800 COLD WEATHER SEALANT OR APPROVED EQUAL BETWEEN EACH SPACER RING AND TOP FLANGE OF BASE CAN. DO NOT INSTALL EXCESSIVE AMOUNT OF SEALANT AND DO NOT INSTALL SEALANT IN BASE CAN BOLT HOLES.
6. THE P-606 SEALER SHALL FILL THE VOID TO BE FLUSH WITH THE CONCRETE RING OR WITHIN 0.125" BELOW THE TOP EDGE OF THE CONCRETE RING AT THE LOWEST POINT OF THE CONCRETE. ANY OVER POURS SHALL BE REPLACED BY AND AT THE CONTRACTOR'S EXPENSE.

COLORADO LICENSED
JORON LEAN
52246
2/15/19
PROFESSIONAL ENGINEER

CITY & COUNTY of DENVER

DENVER INTERNATIONAL AIRPORT

LEAN ENGINEERING

RUNWAY 17R-35L COMPLEX PAVEMENT REHABILITATION PACKAGE 1

ISSUE RECORD

NO.	BY	PURPOSE	DATE	CKD
1	LE	50% DESIGN	09/14/18	DL
2	LE	90% DESIGN	10/26/18	DL
3	LE	BID	12/26/18	DL
4	LE	CONSTRUCTION	2/15/19	DL

SCALE: AS INDICATED
DATE: FEBRUARY 15, 2019
DRAWN BY: KV
CHECKED BY: JA
FAA AIP NO:
WORK BREAKDOWN NO.
DESIGN CONTRACT NO. 201735882
CONST. CONTRACT NO. 201846271
VOLUME NO.
SHEET TITLE: ELECTRICAL DETAIL 3
SHEET NO. EL503
254 OF 396
CADD FILE NO. _201735882-B1EELD-5249

D:\dropbox (lean photometrics)\active projects\1571801a rah den 17r-35l reconstruction\01 drawings\working drawings\Sheets_201735882-B1EELD-5249.dwg Feb 12, 2019 - 5:20pm Kat

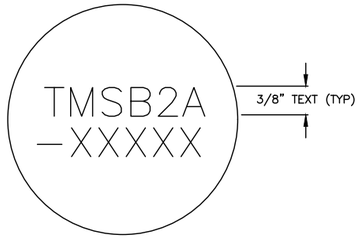

1 TYPICAL ID TEXT
NOT TO SCALE

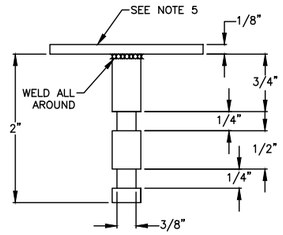

4 SECTION
NOT TO SCALE

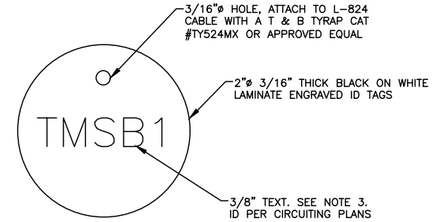

7 TYPICAL L–824 CABLE ID TAG
NOT TO SCALE

NOTES:

1. SEE SHEETS E–001 & EL001 FOR GENERAL ELECTRICAL NOTES AND LEGEND.

SHEET NOTES:

1. L–823 CONNECTORS SHALL BE INSTALLED ON ALL CABLES, BASE CAN, OR OTHER ACCESSIBLE LOCATIONS EXCEPT AS MODIFIED BELOW: CONNECTORS ARE NOT REQUIRED IN CABLES PASSING THROUGH A LIGHT BASE WITH A FIXTURE AND NOT FEEDING THAT FIXTURE. THESE CABLES SHALL HAVE THE REQUIRED SLACK AND CABLE ID TAGS IN EACH BASE CAN. CONNECTORS ARE REQUIRED IN ALL CABLES IN ALL LIGHT BASE CANS THAT ARE USED ONLY AS PULL–CANS (WITH NO FIXTURES).
2. ONLY THE LAST FIXTURE IN CIRCUIT SHALL BE CONNECTED TO THE RETURN LEAD (WHITE STRIPED CONDUCTOR) OF THE CCR.
3. ALL L–824 CABLES SHALL BE IDENTIFIED WITH A BLACK ON WHITE LAMINATE FACTORY ENGRAVED ID TAG WITH ITS RESPECTIVE CIRCUIT/LOOP NUMBER AT ALL ACCESSIBLE LOCATIONS. ATTACH THE ID TAG 12" FROM THE L–823 CONNECTORS, OR MIDLOOP IF NO CONNECTORS ARE REQUIRED. THE LOOPS SHALL BE IDENTIFIED ON EACH SIDE OF THE L–823 CONNECTORS.
4. ALL BASE CAN AND DUCT BANK COUNTERPOISE CONDUCTORS SHALL BE EXOTHERMICALLY WELDED TO THE EXISTING COUNTERPOISE SYSTEM.
5. BRASS ID MARKER TO BE INSTALLED ON OPPOSITE SIDE OF STRIPING ON SINGLE CIRCUIT FIXTURES.

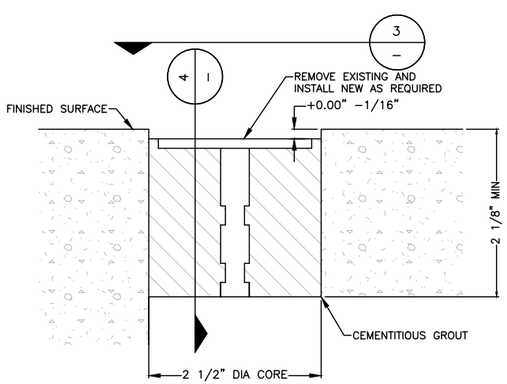

NOTE:

1. INSTALL ID MARKERS BY DRILLING IN AFTER CONCRETE HAS SET.

2 AIRFIELD LIGHTING FIXTURE ID MARKER
NOT TO SCALE

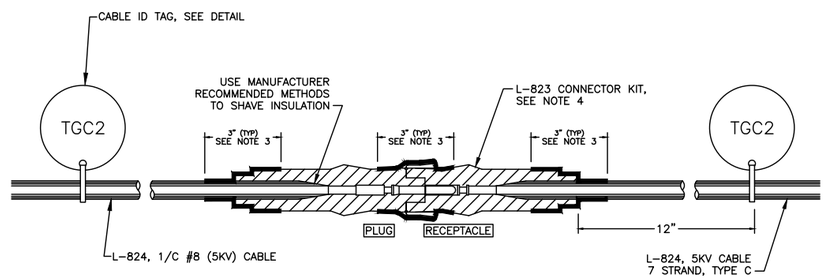

NOTES:

1. THE CABLE SHALL BE THOROUGHLY CLEANED PRIOR TO THE INSTALLATION OF THE L–823 CONNECTOR KIT.
2. INSTALLATION OF THE PIN/RECEPTACLE SHALL BE COMPLETED WITH "CRIMPING" TOOL SUPPLIED OR RECOMMENDED BY THE MANUFACTURER AND DESIGNED FOR THIS SPECIFIC PURPOSE.
3. ALL FIELD MADE JOINTS SHALL BE WRAPPED WITH 3" OF SCOTCH SUPER 88 TAPE, OR APPROVED EQUAL, 1 1/2" ON EACH SIDE OF JOINT AND HALF LAPPED.
4. PROVIDE CONNECTOR KITS THAT INCLUDE AN INTEGRAL FLAP/BOOT TO SEAL THE JOINT BETWEEN THE PLUG AND RECEPTACLE. WRAP JOINT WITH SCOTCH SUPER 88 TAPE OR APPROVED EQUAL.
5. CONTRACTOR SHALL REMOVE AMERACE CABLE SPREADER PRIOR TO INSTALLATION OF CABLE TO CONNECTOR.
6. SPLICE THE RETURN CONDUCTOR IF IN SAME CONDUIT WITH THE SUPPLY CONDUCTOR AT FIXTURE LOCATIONS ENDING WITH 5 OR 0. CONTRACTOR SHALL SPLICE ONLY WHEN REQUIRED. LOCATIONS OF RETURN SPLICE ARE TO BE AS–BUILT.

5 TYPICAL L–824 (5KV) CABLE CONNECTOR DETAIL
NOT TO SCALE

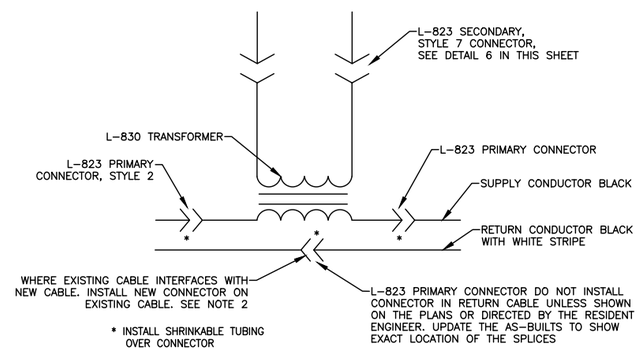

* INSTALL SHRINKABLE TUBING OVER CONNECTOR

NOTES:

1. DO NOT USE HEAT SHRINK TUBING ON THE SECONDARY OF THE L–830 TRANSFORMER WHEN CONNECTED TO AN ELEVATED FIXTURE.
2. BOLD INFORMATION IS NEW. SCREENED INFORMATION IS EXISTING.

8 TYPICAL LIGHTING CONNECTION SCHEMATIC IN BASE CAN
NOT TO SCALE

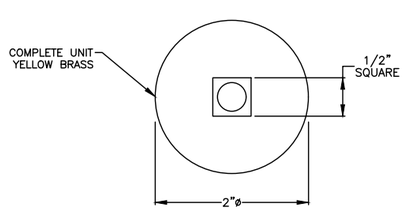

3 TOP VIEW
NOT TO SCALE

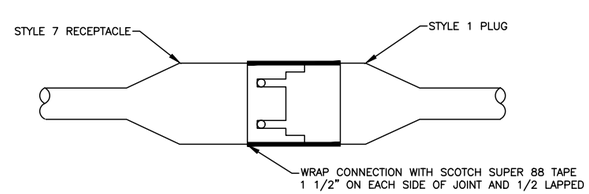

NOTE:

1. CONTRACTOR SHALL INSTALL TAPE ON CONNECTION BETWEEN THE SECONDARY OF ISOLATION TRANSFORMER AND EXTENSION LEAD FOR SIGNS, INSET FIXTURES, AND BRITE UNITS.

6 INPAVEMENT FIXTURE SECONDARY CONNECTOR DETAIL
NOT TO SCALE

CITY & COUNTY of DENVER

DENVER INTERNATIONAL AIRPORT

LEAN ENGINEERING

RUNWAY 17R-35L COMPLEX PAVEMENT REHABILITATION PACKAGE 1

ISSUE RECORD

NO.	BY	PURPOSE	DATE	CKD
1	LE	50% DESIGN	09/14/18	DL
2	LE	90% DESIGN	10/26/18	DL
3	LE	BID	12/26/18	DL
4	LE	CONSTRUCTION	2/15/19	DL

SCALE: AS INDICATED

DATE: FEBRUARY 15, 2019

DRAWN BY: KV

CHECKED BY: JA

FAA AIP NO:

WORK BREAKDOWN NO.

DESIGN CONTRACT NO. 201735882

CONST. CONTRACT NO. 201846271

VOLUME NO.

SHEET TITLE: ELECTRICAL DETAIL 4

SHEET NO. EL504

CADD FILE NO. _201735882-B1EELD-5249

D:\dropbox (lean photometrics)\active projects\1571801a rah den 17r-35l reconstruction\01 drawings\working drawings\Sheets_201735882-B1EELD-5249.dwg Feb 12, 2019 - 5:20pm Kat

NOTES:

1. SEE SHEETS E-001 & EL001 FOR GENERAL ELECTRICAL NOTES AND LEGEND.

SHEET NOTES:

1. THE LEAD-ON LIGHTS ARE POWERED BY THE TBSB2A AND TBSB3. THE LEAD-OFF LIGHTS ARE POWERED BY THE TBS CIRCUIT. THE LEAD-ON LIGHTS ARE THE LIGHT BEAMS THE PILOT WOULD SEE ENTERING THE RUNWAY FROM THE TAXIWAY. THE LEAD-OFF LIGHTS ARE THE LIGHT BEAM THE PILOT WOULD SEE ENTERING THE TAXIWAY FROM THE RUNWAY.

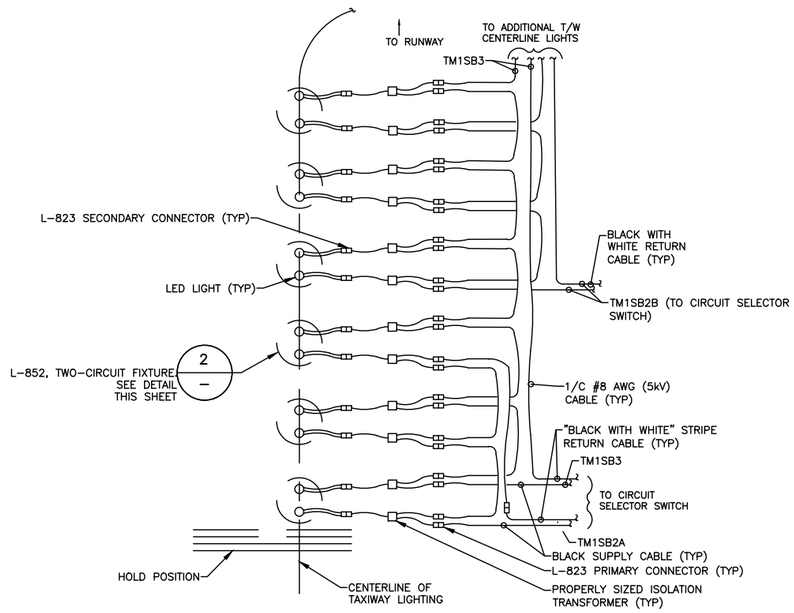

1 – TYPICAL TAXIWAY "LEAD-ON/LEAD-OFF" CENTERLINE SERIES LIGHTING CIRCUIT WIRING
NOT TO SCALE

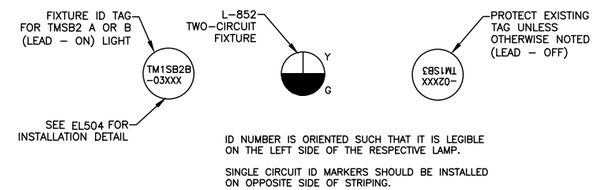

3 – FIXTURE ID TAG FOR TWO-CIRCUIT FIXTURE
NOT TO SCALE

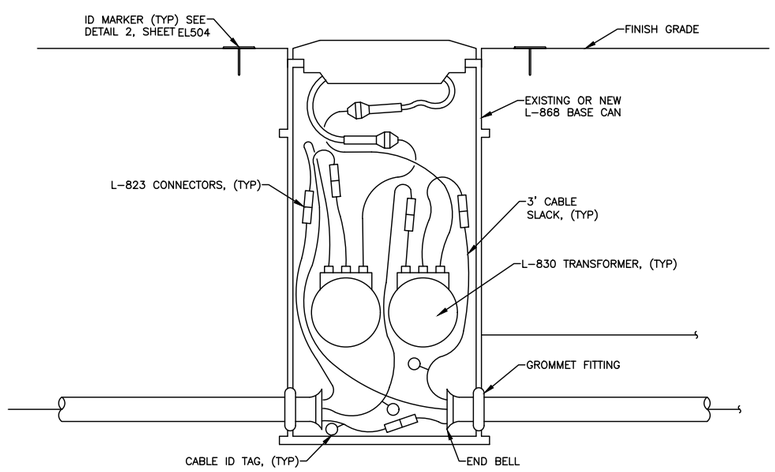

2 – TYPICAL LEAD-ON /LEAD-OFF LIGHT WIRING
NOT TO SCALE

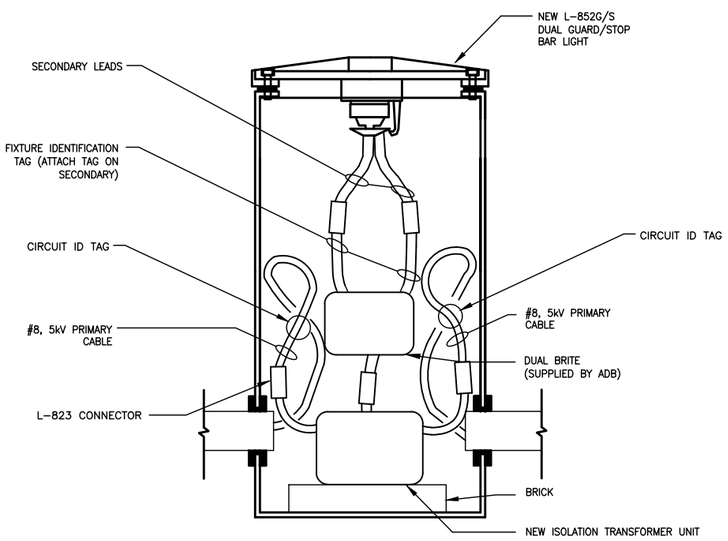

3 – TYPICAL CONFIGURATION: RUNWAY L-852G/S DUAL GUARD/STOP LIGHT
NOT TO SCALE

COLORADO LICENSED
AARON LEAN
52246
2/15/19
PROFESSIONAL ENGINEER

CITY & COUNTY of DENVER

DENVER INTERNATIONAL AIRPORT

LEAN ENGINEERING

RUNWAY 17R-35L COMPLEX PAVEMENT REHABILITATION PACKAGE 1

ISSUE RECORD

NO.	BY	PURPOSE	DATE	CKD
1	LE	50% DESIGN	09/14/18	DL
2	LE	90% DESIGN	10/26/18	DL
3	LE	BID	12/26/18	DL
4	LE	CONSTRUCTION	2/15/19	DL

SCALE: AS INDICATED
DATE: FEBRUARY 15, 2019
DRAWN BY: KV
CHECKED BY: JA
FAA AIP NO:
WORK BREAKDOWN NO.
DESIGN CONTRACT NO. 201735882
CONST. CONTRACT NO. 201846271
VOLUME NO.
SHEET TITLE: ELECTRICAL DETAIL 5
SHEET NO. EL505
256 OF 396
CADD FILE NO. _201735882-B1EELD-5249

D:\dropbox (lean photometrics)\active projects\1571801a rah den 17r-35l reconstruction\01 drawings\working drawings\Sheets_201735882-B1EELD-5249.dwg Feb 12, 2019 - 5:20pm Kat

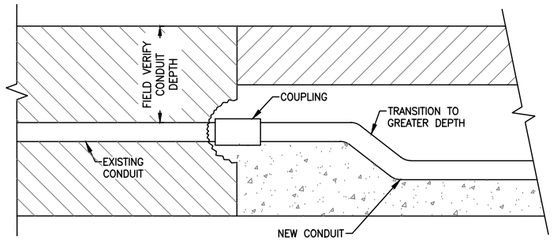

NOTES:

1. LOCATE EXISTING CONDUIT WHICH IS BEING INTERCEPTED AND FIELD VERIFY CONDUIT DEPTH.
2. SAW CUT A 4'x4' MINIMUM SECTION OF PAVEMENT AND HAND EXCAVATE AT POINT OF CONNECTION. CUT CONDUIT AND CHISEL OUT AN AREA AROUND CONDUIT END.
3. CLEAN CONDUIT AND INSTALL A COUPLING.
4. SAW CUT OR KERF TRENCH FOR NEW CONDUIT TO EXCAVATED HOLE AREA.
5. INSTALL NEW CONDUIT AS INDICATED IN CONDUIT INSTALLATIONS.
6. IF EXISTING CONDUIT DEPTH IS LESS THAN THE NEW CONDUIT TRANSITION TO GREATER DEPTH.
7. RESTORE THE CEMENT TREATED BASE BY POURING (N) P-610.

1 / – EXISTING CONDUIT CONNECTION DETAIL
NOT TO SCALE

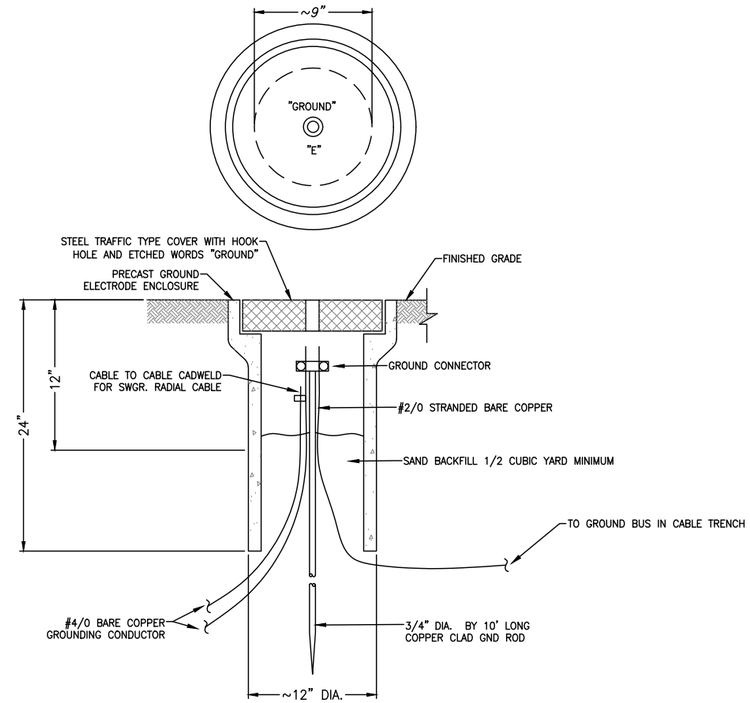

2 / – GROUND TEST WELL
NOT TO SCALE

NOTES:

1. SEE SHEETS E-001 FOR GENERAL ELECTRICAL NOTES.

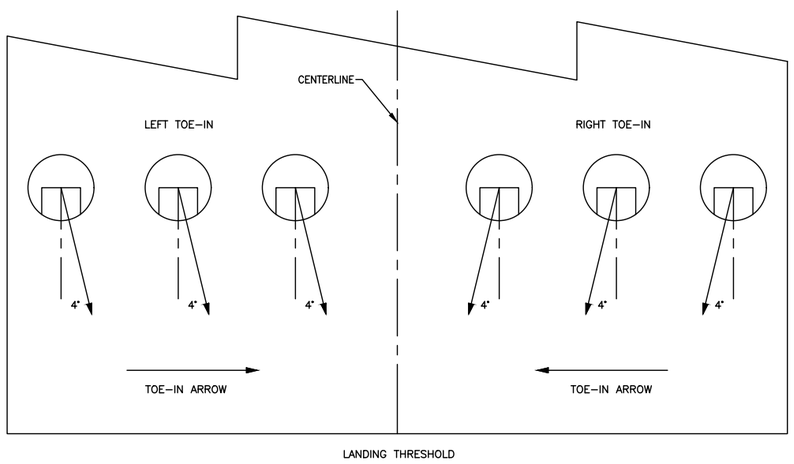

NOTES:

1. CONTRACTOR SHALL SUPPLY L-850B LIGHTS THAT HAVE STRAIGHT PHOTOMETRIC BEAM BUT SHALL INSTALL THE BASE CAN TOED-IN 4° DEGREES TOWARD CENTERLINE.

3 / – AIMING OF TDZ BASE CANS
NOT TO SCALE

COLORADO LICENSED
AARON LEA
52246
2/15/19
PROFESSIONAL ENGINEER

CITY & COUNTY of DENVER

DENVER INTERNATIONAL AIRPORT

LEAN ENGINEERING

RUNWAY 17R-35L COMPLEX PAVEMENT REHABILITATION PACKAGE 1

ISSUE RECORD

NO.	BY	PURPOSE	DATE	CKD
1	LE	50% DESIGN	09/14/18	DL
2	LE	90% DESIGN	10/26/18	DL
3	LE	BID	12/26/18	DL
4	LE	CONSTRUCTION	2/15/19	DL

SCALE: AS INDICATED
DATE: FEBRUARY 15, 2019
DRAWN BY: KV
CHECKED BY: JA
FAA AIP NO:
WORK BREAKDOWN NO.
DESIGN CONTRACT NO. 201735882
CONST. CONTRACT NO. 201846271
VOLUME NO.
SHEET TITLE: ELECTRICAL DETAIL 6
SHEET NO. EL506
257 OF 396
CADD FILE NO. _201735882-B1EELD-5249

D:\dropbox (lean photometrics)\active projects\157180 ia rah den 17r-35l reconstruction\01 drawings\working drawings\sheets_201735882-B1EELD-5249.dwg Feb 12, 2019 - 5:20pm Kat

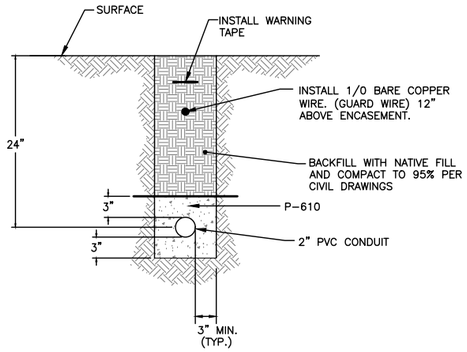

1 — 1W-2" CONDUIT IN NON-PAVED EARTH (NATIVE SOIL)
NOT TO SCALE

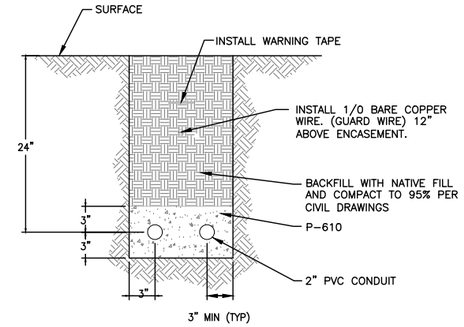

2 — 2W-2" CONDUIT IN NON-PAVED EARTH (NATIVE SOIL)
NOT TO SCALE

NOTES:

1. SEE SHEETS E-001 FOR GENERAL ELECTRICAL NOTES.

DUCTBANK NOTES:

1. WARNING TAPE 6" WIDE RED POLYETHYLENE TAPE WITH LEGEND "CAUTION ELECTRICAL LINES BELOW", OR "CAUTION COMM. LINES BELOW", (BRADY IDENTOLINE OR EQUAL) PLACED AT 12" ABOVE DUCTBANK.
2. INSTALL GROUND WIRE (COUNTERPOISE) MINIMUM 12" ABOVE TOP OF THE CONDUITS. COUNTERPOISE SHALL BE 7 STRANDED, CLASS A , #1/0 BARE COPPER. TERMINATE COUNTERPOISE AT HANDHOLE OR BUILDING GROUND ROD BY EXOTHERMIC WELD.
3. ALL GROUND RODS SHALL BE INSTALLED VERTICALLY TO A DEPTH OF 12 INCHES BELOW GRADE TO TOP OF ROD. IF ROD CANNOT BE DRIVEN TO THIS DEPTH DUE TO ROCK SUBGRADE. THE SUBGRADE SHALL BE DRILLED TO ACHIEVE THE DESIRED DEPTH AND THE HOLE SHALL BE SEALED WITH AN FAA APPROVED SEALANT. ALL GROUND RODS SHALL BE 3/4" X 10' COPPER CLAD.
4. GROUND RODS SHALL BE INSTALLED AT APPROXIMATELY 90-FOOT INTERVALS USING EXOTHERMIC WELDS TO ACHIEVE GROUND RESISTANCE OF LESS THAN 10 OHMS. THE SPACING BETWEEN GROUND RODS MUST VARY 10% TO 20% TO PREVENT RESONANCE. INSTALL THE GROUND RODS APPROXIMATELY 6-FEET FROM DUCTBANK ON EITHER SIDE OF TRENCH.
5. UTILIZE METERING DEVICE THAT HAS THE CAPABILITY OF ACCURATELY READING THE RESISTANCE OF A SINGLE GROUND ROD WITHIN A SYSTEM TO A VARIANCE OF +/- 1%. ALL GROUND RODS SHALL BE TESTED FOLLOWING INSTALLATION AND SHALL HAVE A RESISTANCE TO GROUND NO GREATER THAN 10 OHMS. IF THIS RESISTANCE CANNOT BE ACHIEVED, AN ADDITIONAL GROUND ROD SHALL BE INSTALLED AT A DISTANCE AWAY FROM THE ORIGINAL GROUND ROD OF ONE GROUND ROD LENGTH AND THEN BONDED TO THE GROUNDING SYSTEM.
6. EXOTHERMIC WELD ALL GROUND ROD CONNECTIONS.
7. INSTALL PULL ROPE IN ALL CONDUITS.
8. INSTALL THE SIDES OF THE DUCTBANK WITH A NEAT VERTICAL FACE, OR FORMING IF NECESSARY. THE CONTRACTOR SHALL FURNISH ALL LABOR, EQUIPMENT, MATERIAL AND INCIDENTALS NECESSARY FOR FORMWORK. FORMWORK SHALL NOT BE SEPARATELY MEASURED BUT SHALL BE CONSIDERED INCIDENTAL TO THE RESPECTIVE DUCTBANK PAY ITEM.
9. CONTRACTOR SHALL ANTICIPATE DEWATERING ALL TRENCHES. ALL WATER SHALL BE DISCHARGED PER THE APPLICABLE ENVIRONMENTAL REGULATIONS. SUBCONTRACTOR SHALL FURNISH ALL LABOR, EQUIPMENT, MATERIAL, EROSION CONTROL AND INCIDENTALS NECESSARY FOR DEWATERING. DEWATERING SHALL NOT BE SEPARATELY MEASURED FOR PAYMENT. DEWATERING IS INCIDENTAL TO THE VARIOUS DUCTBANK PAY ITEMS. CONTRACTOR SHALL HAUL SPOILS OFF AIRPORT PROPERTY IN ACCORDANCE WITH APPLICABLE RULES. COST IS INCIDENTAL TO COST OF TRENCH.
10. PROVIDE 12 INCH SEPARATION BETWEEN POWER AND COMMUNICATION CONDUIT.
11. SLOPE CONDUIT TO PULL BOX WITHIN 5 FT OF PULL BOX. SLOPE CONDUIT AT TRANSITION BETWEEN ASPHALT AND NON-PAVED EARTH 5 FT BEFORE TRANSITION POINT.

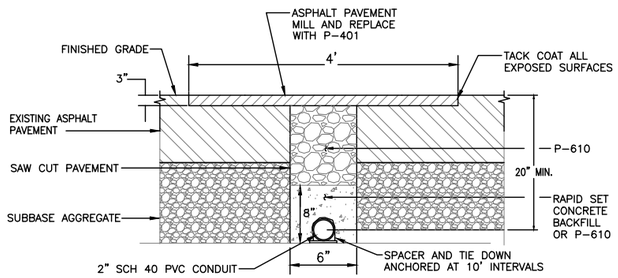

NOTES:

1. SAWCUT 6" WIDE TRENCH IN EXISTING ASPHALT PAVEMENT TO MIN. 20" DEPTH. THOROUGHLY CLEAN CUT.
2. ENCASE WITH CONCRETE AS SHOWN.
3. COMPLETE ASPHALT PAVEMENT RESTORATION AS SHOWN.

3 — CONDUIT INSTALLATION IN EXISTING ASPHALT OVERLAY
NOT TO SCALE

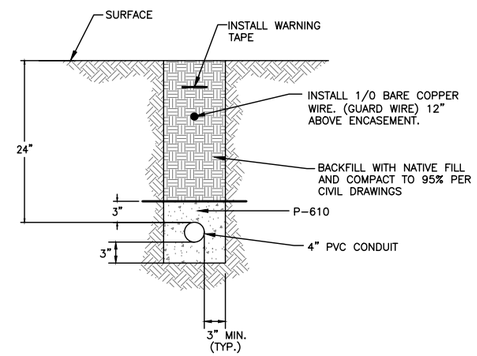

4 — 1W-4" CONDUIT IN NON-PAVED EARTH (NATIVE SOIL)
NOT TO SCALE

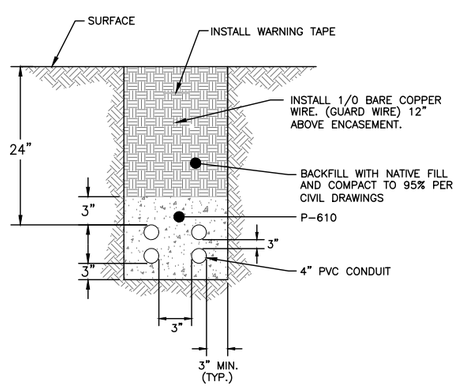

5 — 4-WAY, POWER DUCTBANK IN NON-PAVED EARTH (NATIVE SOIL)
NOT TO SCALE

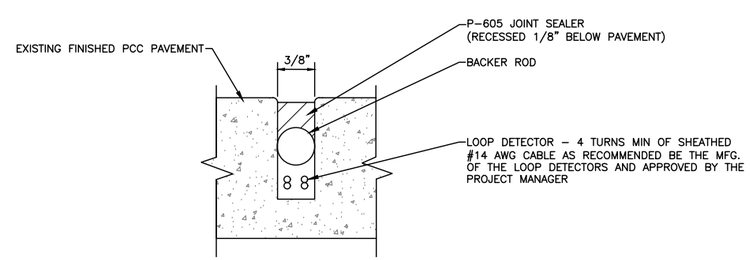

6 — LOOP DETECTOR IN PCC
NOT TO SCALE

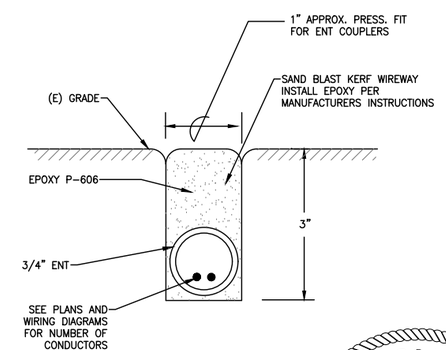

7 — LOOP DETECTOR I
NOT TO SCALE

COLORADO LICENSED
BARON LEAN
52246
2/15/19
PROFESSIONAL ENGINEER

CITY & COUNTY of DENVER

DENVER INTERNATIONAL AIRPORT

LEAN ENGINEERING

RUNWAY 17R-35L COMPLEX PAVEMENT REHABILITATION PACKAGE 1

ISSUE RECORD

NO.	BY	PURPOSE	DATE	CKD
1	LE	50% DESIGN	09/14/18	DL
2	LE	90% DESIGN	10/26/18	DL
3	LE	BID	12/26/18	DL
4	LE	CONSTRUCTION	2/15/19	DL

SCALE: AS INDICATED
DATE: FEBRUARY 15, 2019
DRAWN BY: KV
CHECKED BY: JA
FAA AIP NO:
WORK BREAKDOWN NO.
DESIGN CONTRACT NO. 201735882
CONST. CONTRACT NO. 201846271
VOLUME NO.
SHEET TITLE: ELECTRICAL DETAIL 7
SHEET NO. EL507
258 OF 396
CADD FILE NO. _201735882-B1EELD-5249

D:\dropbox (lean photometrics)\active projects\1571801a rah den 17r-35l reconstruction\01 drawings\working drawings\Sheets_201735882-B1EELD-5249.dwg Feb 12, 2019 - 5:20pm Kat

NOTES:

1. SEE SHEETS E-001 FOR GENERAL ELECTRICAL NOTES.

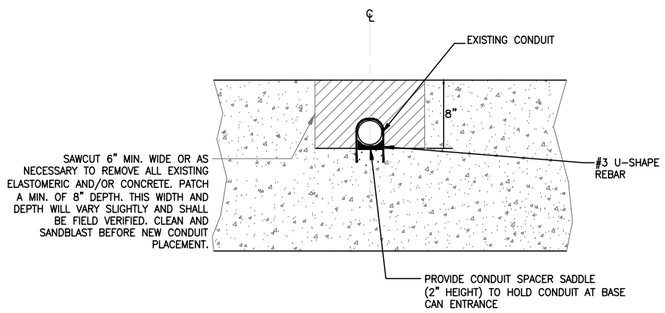

SIDE VIEW
STEP 1

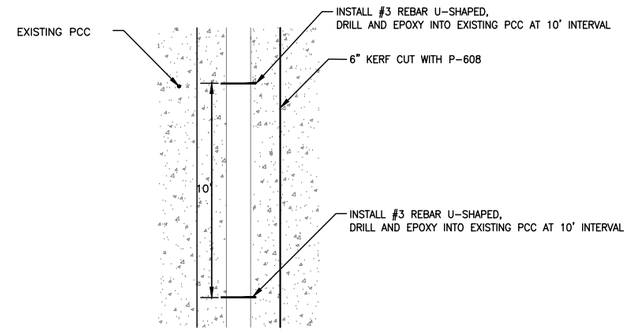

TOP VIEW
STEP 2

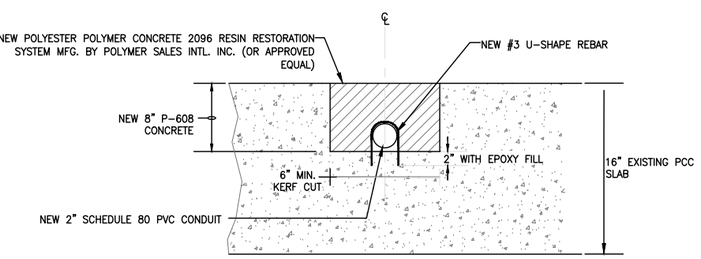

SIDE VIEW
STEP 2

1 NEW ELECTRICAL AIRFIELD CONDUIT IN EXISTING PCC PAVEMENT

NOT TO SCALE

CITY & COUNTY of DENVER

DENVER INTERNATIONAL AIRPORT

LEAN ENGINEERING

RUNWAY 17R-35L COMPLEX PAVEMENT REHABILITATION PACKAGE 1

ISSUE RECORD

NO.	BY	PURPOSE	DATE	CKD
1	LE	50% DESIGN	09/14/18	DL
2	LE	90% DESIGN	10/26/18	DL
3	LE	BID	12/26/18	DL
4	LE	CONSTRUCTION	2/15/19	DL

SCALE: AS INDICATED

DATE: FEBRUARY 15, 2019

DRAWN BY: KV

CHECKED BY: JA

FAA AIP NO:

WORK BREAKDOWN NO.

DESIGN CONTRACT NO. 201735882

CONST. CONTRACT NO. 201846271

VOLUME NO.

SHEET TITLE

ELECTRICAL DETAIL 8

SHEET NO. EL508

259 OF 396

CADD FILE NO. _201735882-B1EELD-5249

COLORADO LICENSED
AARON LEAN
52246
2/15/19
PROFESSIONAL ENGINEER

Feb 12, 2019 – 5:20pm Kat

D:\dropbox (lean photometrics)\active projects\1571801a rah den 17r-35l reconstruction\01 drawings\working drawings\Sheets_201735882-B1EELD-5248.dwg

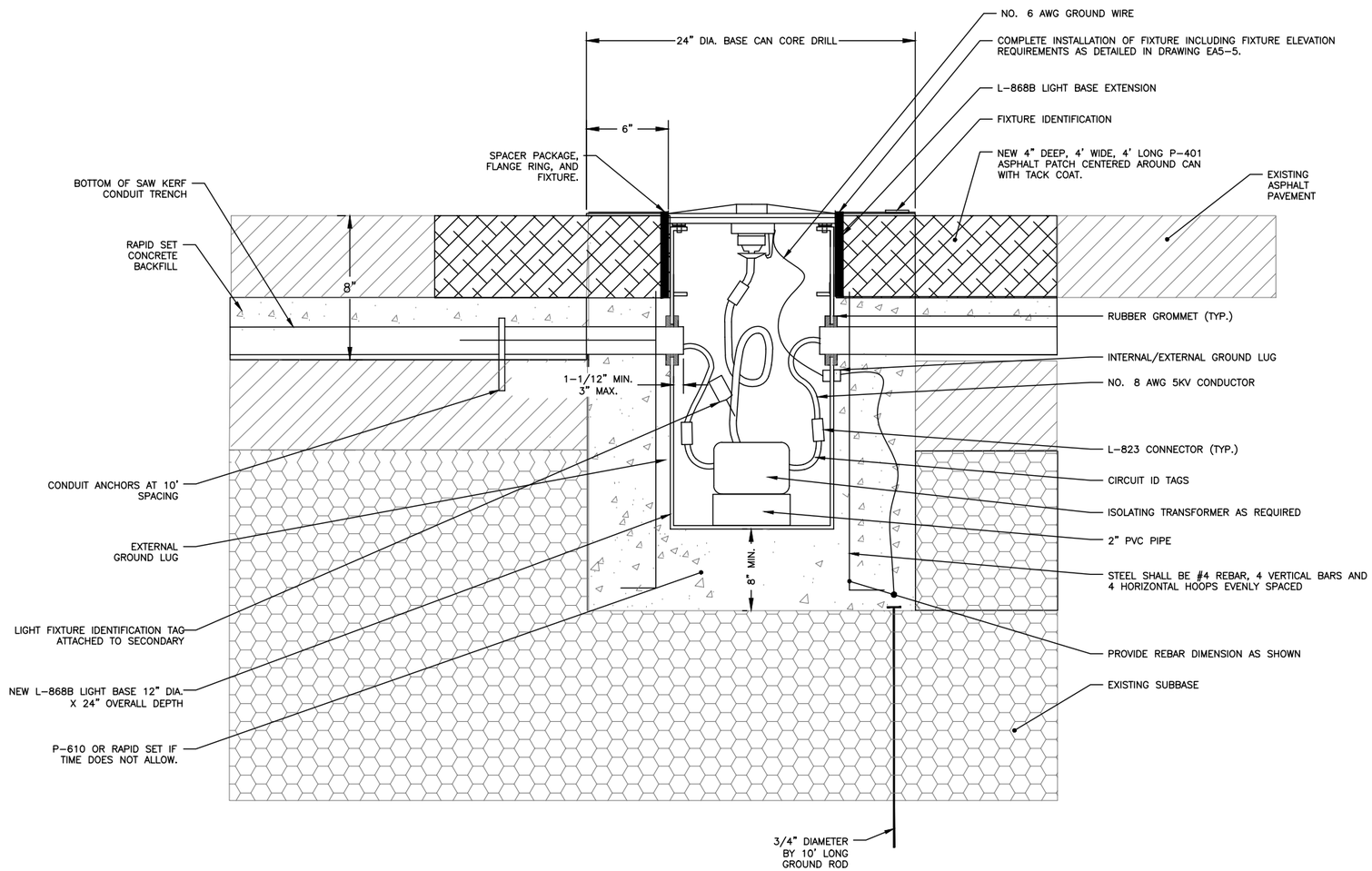

1 NEW L-868B LIGHT BASE CAN IN EXISTING ASPHALT PAVEMENT SECTION
NOT TO SCALE

NOTES:

1. SEE SHEETS E-001 FOR GENERAL ELECTRICAL NOTES.

SHEET NOTES:

1. CONTRACTOR SHALL INSTALL BASE CAN AT LOCATIONS SHOWN ON THE CONTRACT DRAWINGS.
2. INSTALL STEEL REINFORCEMENT CAGE AND POSITION L-868 LIGHT BASE CAN USING AN ALIGNMENT JIG (JAQUITH PART # A-9100 OR APPROVED EQUAL) AS DETAILED IN DETAIL 1 THIS SHEET.
3. INSTALL NEW CONDUIT IN EXISTING ASPHALT SHOULDER (REFER TO DRAWING EA5-10) AND CONNECT LIGHT BASES AS SHOWN ON PLAN SHEETS. NO SHARP ANGLES SHALL BE MADE IN CONNECTING CONDUIT TO LIGHT BASE THAT MIGHT INHIBIT PULLING CABLE.
4. INSTALL 5/8" PLYWOOD COVER AND 1/8" MUD PLATE. CONCRETE ENCASE CONDUIT AND CAN SO THAT TOP OF MUD PLATE IS MIN. 4" BELOW EXISTING ASPHALT PAVEMENT GRADE.
5. RESTORE PAVEMENT WITH P-401, 4' WIDE, 4' LONG, 4" DEEP P-401. CLEAN SURFACE AND APPLY TACK COAT AT PAVEMENT.
6. PERFORM PILOT CORE AND ORDER LIGHT BASE CAN EXTENSION. AFTER BASE CAN EXTENSION IS ON-SITE, PROVIDE 13 1/2' CORE CENTERED AROUND CAN.
7. INSTALL EXTENSION, SPACER PACKAGE AND FLANGE RING AND COMPLETE INPAVEMENT LIGHT INSTALLATION AS SHOWN ON DRAWING EA5-5. CONNECT GROUND WIRE TO INTERNAL GROUND LUG. INSTALL COPPER WIRE TO GROUND ROD AT LOCATIONS INDICATED.
8. INSTALL FIXTURE USING MINIMUM 6 EACH 18-8 STAINLESS STEEL BOLTS.
9. AT NO TIME SHALL INSTALLATIONS ON ACTIVE TAXIWAYS ENDANGER AIRCRAFT OR VEHICLES. ANY BASE CAN INSTALLED WITHOUT A LIGHT, TEMPORARILY OR PERMANENTLY, SHALL BE EQUIPPED WITH A COVER PLATE. ANY HOLES OR VOIDS SHALL BE FILLED TO ENSURE PROPER SMOOTHNESS OF OPERATION FOR VEHICLES OR PLANES. ALL THREADED COUPLINGS AND BOLTS COATED WITH ANTISEIZE COMPOUND.
10. REFER TO DRAWING 05 CA 1101 FOR LIGHT BASE TOLERANCES.

COLORADO LICENSED
DARON LEA
52246
2/15/19
PROFESSIONAL ENGINEER

CITY & COUNTY of DENVER

DENVER INTERNATIONAL AIRPORT

LEAN ENGINEERING

RUNWAY 17R-35L COMPLEX PAVEMENT REHABILITATION PACKAGE 1

ISSUE RECORD

NO.	BY	PURPOSE	DATE	CKD
1	LE	50% DESIGN	09/14/18	DL
2	LE	90% DESIGN	10/26/18	DL
3	LE	BID	12/26/18	DL
4	LE	CONSTRUCTION	2/15/19	DL

SCALE: AS INDICATED
DATE: FEBRUARY 15, 2019
DRAWN BY: KV
CHECKED BY: JA
FAA AIP NO:
WORK BREAKDOWN NO.
DESIGN CONTRACT NO. 201735882
CONST. CONTRACT NO. 201846271
VOLUME NO.
SHEET TITLE: ELECTRICAL DETAIL 9
SHEET NO. EL509
260 OF 396
CADD FILE NO. _201735882-B1EELD-5249

D:\dropbox (lean photometrics)\active projects\1157180a rah den 17-35l reconstruction\01 drawings\working drawings\Sheets_201735882-B1EELD-5249.dwg Feb 12, 2019 - 5:20pm Kat

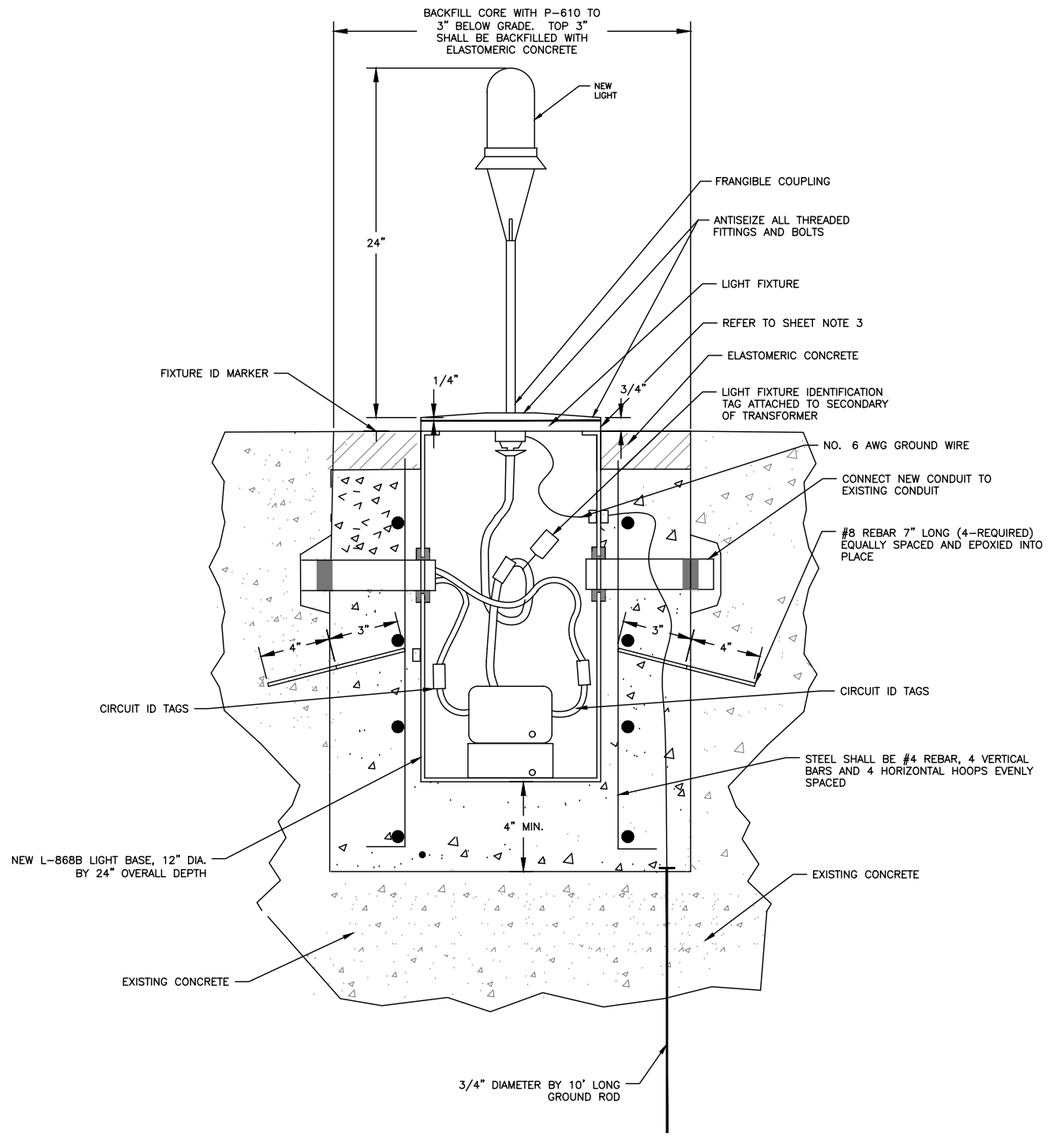

1 NEW L-868B LIGHT BASE CAN IN EXISTING CONCRETE PAVEMENT SECTION
NOT TO SCALE

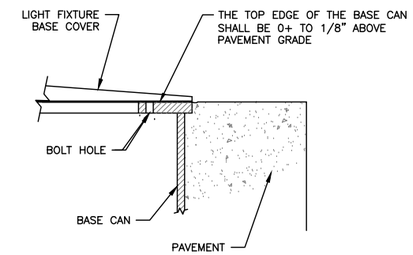

2 BASE CAN EDGE DETAIL
NOT TO SCALE

NOTES:

1. SEE SHEETS E-001 FOR GENERAL ELECTRICAL NOTES.

SHEET NOTES:

1. CORE AND REMOVE EXISTING 36" DIAMETER BY MINIMUM 30" CORE. CLEAN DEBRIS FROM HOLE.
2. CUT TRENCH. INSTALL NEW CONDUIT IN EXISTING CONCRETE AS DETAILED IN DETAIL 1, DRAWING EL508.
3. INSTALL NEW BASE CAN. NOTE: THIS INSTALLATION DOES NOT REQUIRE THE USE OF AN EXTENSION SO ADJUST BASE CAN HEIGHT ACCORDINGLY.
4. POUR RAPID SET CONCRETE TO 3" BELOW FINAL GRADE. ALLOW TO CURE PER MFG. RECOMMENDATIONS.
5. INSTALL 3/8" THICK FOAM OR PLASTIC CYLINDRICAL MATERIAL AROUND THE BASE CAN. THE MATERIAL SHALL EXTEND 1" BELOW THE TOP FLANGE OF THE BASE CAN. THIS IS NECESSARY TO KEEP THE ELASTOMERIC FROM GETTING INTO THE CANS AND BOLT HOLDS.
6. POUR ELASTOMERIC CONCRETE AND LEVEL TO FINISH GRADE.
7. REMOVE FOAM OR CYLINDRICAL MATERIAL.
8. INSTALL SPACER PACKAGE, FIXTURE, AND SIKAFLEX (IN THE VOID LEFT BY THE FOAM OR PLASTIC MATERIAL).
9. COMPLETE INSTALLATION AS SHOWN IN DETAILS ON DRAWING EA5-5 EXCEPT THAT THE BASE CAN DOES NOT REQUIRE AN EXTENSION.

COLORADO LICENSED
DORON LEAN
52246
2/15/19
PROFESSIONAL ENGINEER

CITY & COUNTY of DENVER

DENVER INTERNATIONAL AIRPORT

LEAN ENGINEERING

RUNWAY 17R-35L COMPLEX PAVEMENT REHABILITATION PACKAGE 1

ISSUE RECORD

NO.	BY	PURPOSE	DATE	CKD
1	LE	50% DESIGN	09/14/18	DL
2	LE	90% DESIGN	10/26/18	DL
3	LE	BID	12/26/18	DL
4	LE	CONSTRUCTION	2/15/19	DL

SCALE: AS INDICATED
DATE: FEBRUARY 15, 2019
DRAWN BY: KV
CHECKED BY: JA
FAA AIP NO:
WORK BREAKDOWN NO.
DESIGN CONTRACT NO. 201735882
CONST. CONTRACT NO. 201846271
VOLUME NO.
SHEET TITLE: ELECTRICAL DETAIL 10
SHEET NO. EL510
261 OF 396
CADD FILE NO. _201735882-B1EELD-5249

D:\dropbox (lean photometrics)\active projects\11571801a rah den 17r-35l reconstruction\01 drawings\working drawings\Sheets_201735882-B1EELD-5249.dwg Feb 12, 2019 - 5:20pm Kat

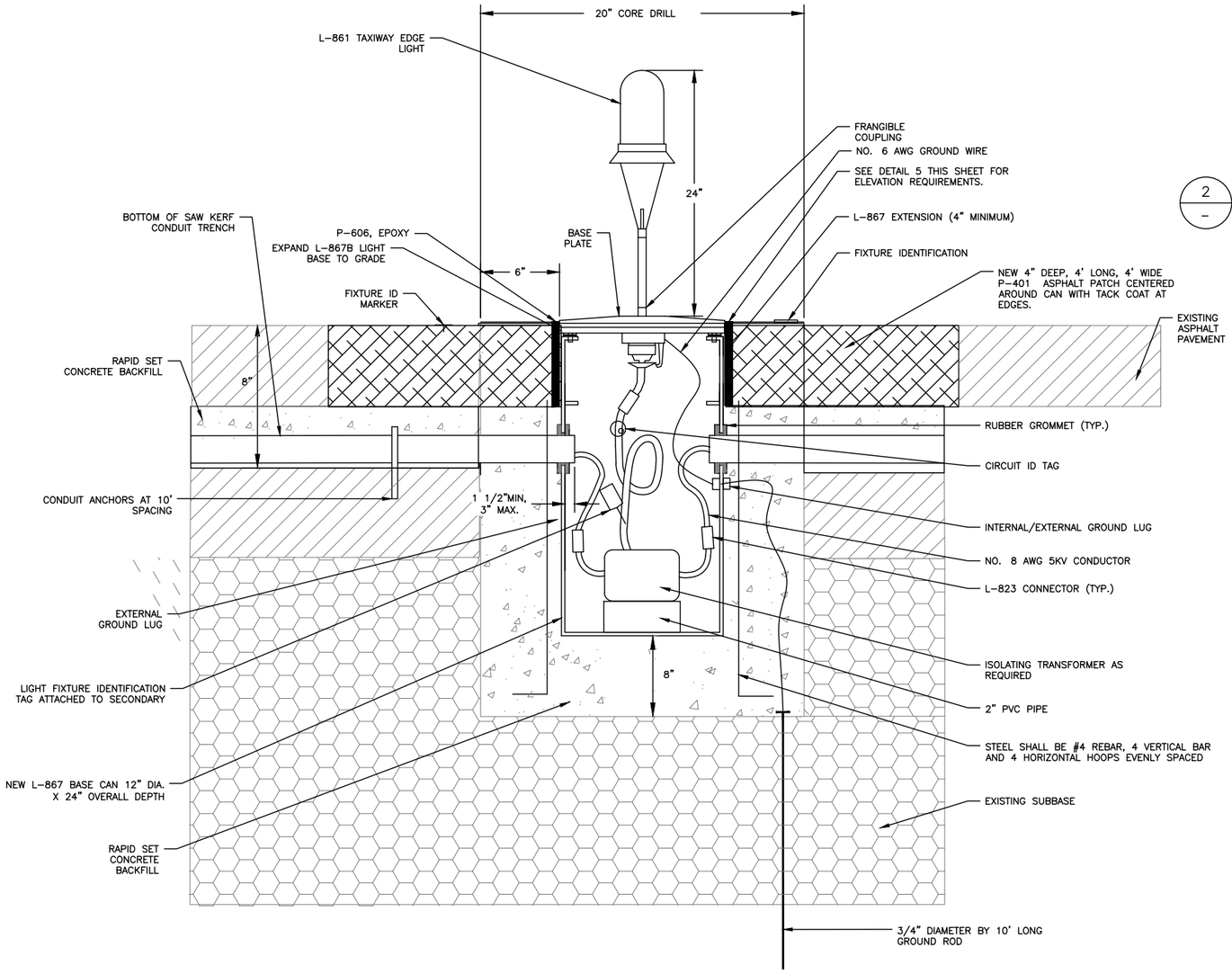

2 NEW L-867B BASE CAN AND ELEVATED FIXTURE INSTALLED IN EXISTING ASPHALT SHOULDER
NOT TO SCALE

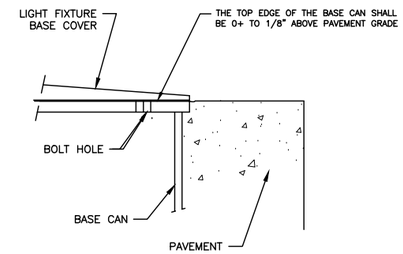

2 BASE CAN EDGE DETAIL
NOT TO SCALE

NOTES:

1. SEE SHEETS E-001 FOR GENERAL ELECTRICAL NOTES.

SHEET NOTES:

1. CORE 24" DIAMETER CORE BY MIN 30" DEEP.
2. INSTALL CAN TO ALLOW FOR A 4" MINIMUM EXTENSION. INSTALL STEEL REINFORCEMENT CAGE AND POSITION BASE TO ALLOW 8" OF P-610 ON BOTTOM OF LIGHT BASE. USE ALIGNMENT JIG (PART #A-9100 OR APPROVED EQUAL)
3. INSTALL NEW CONDUIT IN EXISTING ASPHALT SHOULDER (REFER TO DRAWING AS DETAILED IN DETAIL 3 ON EA5-11) AND CONNECT LIGHT BASES AS SHOWN ON PLAN SHEETS. NO SHARP ANGLES SHALL BE MADE IN CONNECTING CONDUIT TO LIGHT BASE THAT MIGHT INHIBIT PULLING CABLE.
4. INSTALL PLYWOOD COVER AND MUD PLATE. CONCRETE ENCASE WITH P-610 OR RAPID SET CONDUIT AND LIGHT SO THAT TOP OF MUD PLATE IS MIN. 4" BELOW PAVEMENT GRADE. NEW CONCRETE SHALL NOT BE HIGHER TOP OF MUD PLATE.
5. PROVIDE 4' WIDE BY 4' LONG BY 4" DEEP ASPHALT OVERLAY PATCH (P-401). USE TACK COAT AND COMPACT AS REQUIRED.
6. PROVIDE MIN. 14.5" CORE CENTERED AROUND LIGHT BASE. REMOVE CORE AND OTHER MATERIAL. INSTALL EXTENSION (4" MINIMUM EXTENSION) AND FILL WITH P-606.
7. COMPLETE TAXIWAY EDGE LIGHT INSTALLATION AS DETAILED ON THIS DRAWING. CONNECT GROUND WIRE TO INTERNAL GROUND LUG. INSTALL COPPER WIRE TO GROUND ROD AT LOCATIONS INDICATED. POUR P-601 AROUND THE LIGHT BASE EXPANDED SECTION.
8. INSTALL FIXTURE USING MINIMUM 6 EACH 18-8 STAINLESS STEEL BOLTS.
9. AT NO TIME SHALL INSTALLATIONS ON ACTIVE TAXIWAYS ENDANGER AIRCRAFT OR VEHICLES. ANY BASE CAN INSTALLED WITHOUT A LIGHT, TEMPORARILY OR PERMANENTLY, SHALL BE EQUIPPED WITH A COVER PLATE. ANY HOLES OR VOIDS SHALL BE FILLED TO ENSURE PROPER SMOOTHNESS OF OPERATION FOR VEHICLES OR PLANES.

CITY & COUNTY of DENVER

DENVER INTERNATIONAL AIRPORT

LEAN ENGINEERING

RUNWAY 17R-35L COMPLEX PAVEMENT REHABILITATION PACKAGE 1

ISSUE RECORD

NO.	BY	PURPOSE	DATE	CKD
1	LE	50% DESIGN	09/14/18	DL
2	LE	90% DESIGN	10/26/18	DL
3	LE	BID	12/26/18	DL
4	LE	CONSTRUCTION	2/15/19	DL

SCALE: AS INDICATED

DATE: FEBRUARY 15, 2019

DRAWN BY: KV

CHECKED BY: JA

FAA AIP NO:

WORK BREAKDOWN NO.

DESIGN CONTRACT NO. 201735882

CONST. CONTRACT NO. 201846271

VOLUME NO.

SHEET TITLE: ELECTRICAL DETAIL 11

SHEET NO. EL511

CADD FILE NO. _201735882-B1EELD-5249

D:\dropbox (lean photometrics)\active projects\1571801a rah den 17r-35l reconstruction\01 drawings\working drawings\sheets_201735882-B1EELD-5248.dwg Feb 12, 2019 - 5:20pm Kat

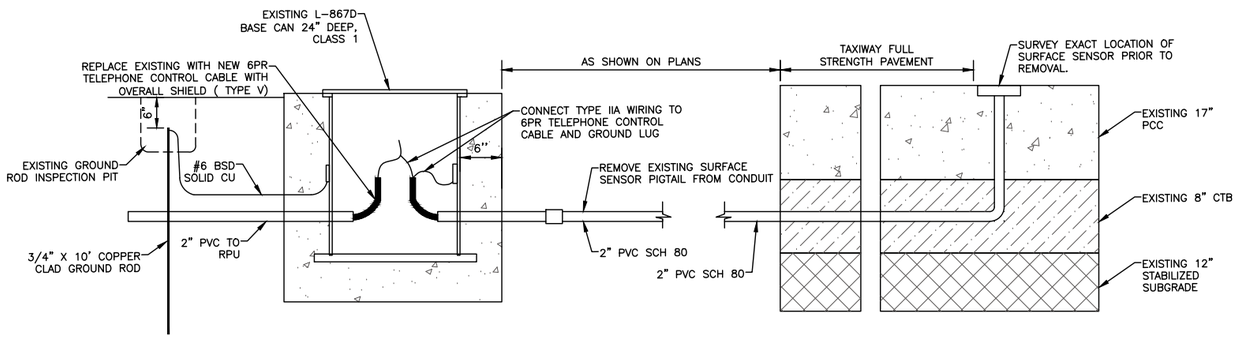

1 RUNWAY SURFACE PAVEMENT SENSOR INSTALLATION
NOT TO SCALE

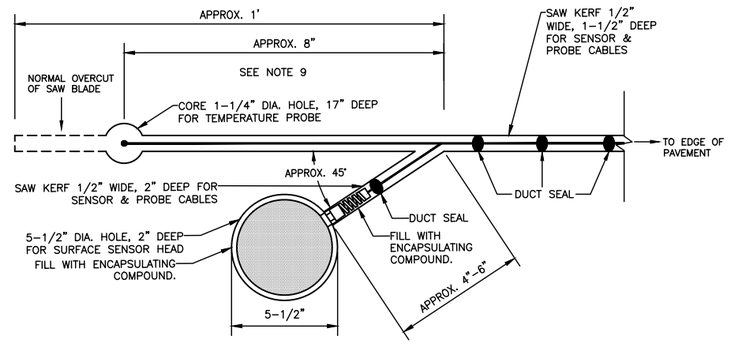

4 PAVEMENT SENSOR & TEMPERATURE PROBE INSTALLATION, PLAN
NOT TO SCALE

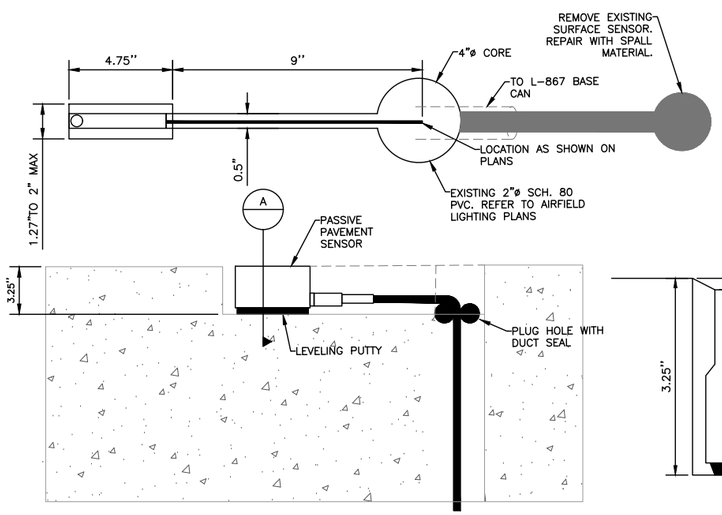

2 PAVEMENT SENSOR INSTALLATION
NOT TO SCALE

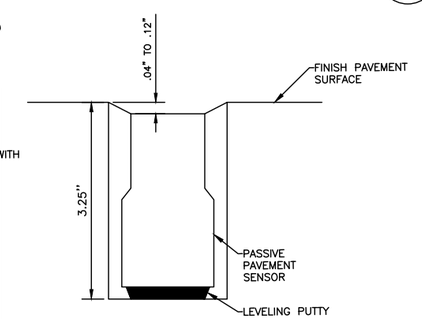

3 SECTION
NOT TO SCALE

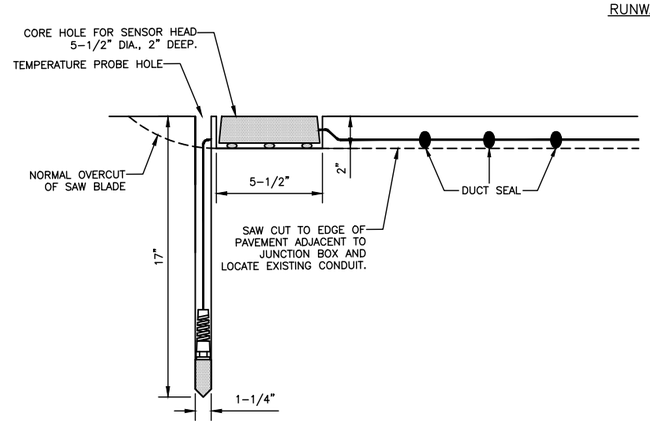

5 PAVEMENT SENSOR & TEMPERATURE PROBE INSTALLATION, SECTION
NOT TO SCALE

NOTES:

1. SEE SHEETS E-001 FOR GENERAL ELECTRICAL NOTES.

SHEET NOTES:

1. CUT TYPE IIA SENSOR CABLE LONG ENOUGH TO MAKE CONNECTION A MINIMUM OF 2' ABOVE THE BASE CAN.
2. DO NOT INSTALL NEW SENSOR AND CABLE LEAN IN SAME SLOT AND LOCATION OF EXISTING SENSOR. EXCESSIVE EPOXY AROUND SENSOR MAKES MEASUREMENT INACCURATE.
3. INSTALL SENSOR PER MANUFACTURER'S INSTRUCTIONS.
4. CUT NEW SENSOR APPROXIMATELY 6" FROM EXISTING SENSOR. FIELD VERIFY THE LOCATION WITH DENVER CONTRACT MANAGER. CORE 4" DEEP SENSOR. INSTALL WIRE BACK THROUGH EXISTING CONDUIT AND SEAL WIRE AND CONDUIT AS REQUIRED.
5. NEW SENSOR SCHEDULE:

SENSOR ID	PAVEMENT SENSOR	TEMP. PROBE
35L	✓	✓
M4	✓	
M5	✓	
M6	✓	
M7	✓	
17R	✓	

RUNWAY PAVEMENT SURFACE SENSORS AND TEMPERATURE PROBE NOTES

1. REFER TO VAISALA PAVEMENT SENSOR AND SUB-SURFACE TEMPERATURE PROBE INSTALLATION MANUAL, PART NO. 00000003 FOR COMPLETE INSTALLATION PROCEDURES AND DIRECTIONS. VAISALA PHONE: 1-877-824-7252.
2. NEW SENSORS AND ALL ASSOCIATED EQUIPMENT SHALL BE INSTALLED BY CONTRACTOR AT LOCATIONS SHOWN ON DRAWINGS, AS APPROVED BY ENGINEER. INSTALL TEMPERATURE PROBE AT LOCATION OF SENSOR WHERE EXISTING PROBE IS INSTALLED.
3. INSTALL SENSORS AND TEMPERATURE PROBE IN ACCORDANCE WITH DETAIL AND MANUFACTURER'S INSTRUCTIONS. INSTALL NEW SENSOR AND PROBE CABLE FROM SENSOR AND PROBE LOCATION TO JB OUTSIDE SHOULDER PAVEMENT. CONNECT NEW SENSORS AND PROBE CABLES TO EXISTING CABLES IN JB WHICH EXTEND TO THE RPU.
4. PERFORM CONTINUITY AND RESISTANCE TEST OF SENSORS AT REMOTE PROCESSING UNIT IN ACCORDANCE WITH MANUFACTURER'S INSTRUCTIONS PROVIDED WITH SENSOR UNIT TO VERIFY PROPER OPERATION. ADJUST OR REPAIR AS REQUIRED.
5. ONLY ONE SENSOR LOCATION CONTAINS A DEEP TEMPERATURE PROBE; FOR LOCATIONS WITH THE SURFACE SENSOR ONLY, DO NOT PERFORM 17" DEEP DRILL AND SAW CUT FOR TEMPERATURE PROBE. SURFACE SENSOR CAN BE PLACED ALIGNED WITH SAW CUT.

COLORADO LICENSED
DORON LEAN
52246
2/15/19
PROFESSIONAL ENGINEER

CITY & COUNTY of DENVER
DENVER INTERNATIONAL AIRPORT

LEAN ENGINEERING

RUNWAY 17R-35L COMPLEX PAVEMENT REHABILITATION PACKAGE 1

ISSUE RECORD

NO.	BY	PURPOSE	DATE	CKD
1	LE	50% DESIGN	09/14/18	DL
2	LE	90% DESIGN	10/26/18	DL
3	LE	BID	12/26/18	DL
4	LE	CONSTRUCTION	2/15/19	DL

SCALE: AS INDICATED
DATE: FEBRUARY 15, 2019
DRAWN BY: KV
CHECKED BY: JA
FAA AIP NO:
WORK BREAKDOWN NO.
DESIGN CONTRACT NO. 201735882
CONST. CONTRACT NO. 201846271
VOLUME NO.
SHEET TITLE: PAVEMENT SENSOR DETAIL
SHEET NO. EL521

CADD FILE NO. _201735882-B1E-0240

D:\dropbox (lean photometrics)\active projects\157180a rab den 17r-35l reconstruction\01 drawings\working drawings\Sheets_201735882-B1E-0240.dwg Feb 12, 2019 - 5:21pm Kot

NOTES:

1. SEE SHEETS E-001 FOR GENERAL ELECTRICAL NOTES.

HANDHOLE NOTES:

1. EQUIPMENT NOTES:
   1.1. ALL EQUIPMENT SHALL BE NEW FURNISHED BY CONTRACTOR. HANDHOLE SHALL BE 4'x4'x4' MINIMUM INSIDE DIMENSION.
   1.2. HANDHOLES ARE PROVIDED WITH HOLES AS SHOWN. CONTRACTOR MUST CORE-DRILL ADDITIONAL HOLES AS REQUIRED.
2. CONTRACTOR SHALL PROVIDE A STAINLESS STEEL ID TAG WITH THE FOLLOWING DESIGNATION: "ELECTRICAL" OR "COMM" WHERE "##" IS THE RESPECTIVE HAND HOLE IDENTIFICATION.
3. SADDLE RACK SHALL BE INSTALLED ON EACH WALL OF THE HANDHOLE.
4. CONTRACTOR SHALL I.D. EACH CABLE ENTERING & EXITING HANDHOLE.
5. CONTRACTOR SHALL INSTALL A 3/4" DIA. 10' LONG COPPER CLAD GROUND ROD.
6. CONTRACTOR SHALL GROUT AROUND ALL DUCTS ENTERING THE HANDHOLE.
7. HANDHOLE SHALL BE NO MORE THAN 3" ABOVE SURROUNDING GROUND WITH BACKFILL MATCHING THE TOP OF THE COVER, SLOPING AWAY FROM THE HANDHOLE.
8. INSTALL #1/0 BARE CU WIRE. BOLT TO HANDHOLE COVER AND EXOTHERMICALLY WELD TO GROUND ROD. PROVIDE SUFFICIENT SLACK TO OPEN COVER.
9. HANDHOLE SHOWN IS MANUFACTURED BY OLD CASTLE, INC. INSIDE DIMENSIONS SHOWN WILL BE MET REGARDLESS OF WHICH PRECAST STRUCTURE MANUFACTURER IS PROPOSED BY THE SUBCONTRACTOR. PRODUCT NO. 4848 STD. OR APPROVED EQUAL
10. ALL BACKFILL AROUND HANDHOLES SHALL BE IN ACCORDANCE WITH ITEM AIRPORT CIVIL SPECIFICATIONS FOR BACKFILL.
11. INSTALL GROUNDING BUSHINGS ON ALL GRS CONDUIT AND GROUND TO GROUND LOOP WITH #2 AWG BARE COPPER CONDUCTOR VIA MECHANICAL PLUG.
12. INSTALL TOP OF HANDHOLE LESS THAN 3" FROM FINISH GRADE.
13. 8" COMPACTED GRAVEL PER SPECIFICATIONS UNDER PULL BOX TO ASSURE UNIFORM DISTRIBUTION OF SOIL PRESSURE AND DRAINAGE.
14. CONDUITS ENTERING PULL BOX WERE FITTED WITH BELL ENDS AND EXTEND 1" INSIDE OF THE HANDHOLE. ALL CONDUIT ENTRANCES WERE NEATLY GROUTED AND SEALED W/DUCT SEAL.
15. CABLES CIRCLE THE INTERIOR PERIMETER OF THE HANDHOLE PRIOR TO EXITING TO PROVIDE SLACK FOR FUTURE SPLICE.
16. ALL CIRCUITS WERE TAGGED IN HANDHOLE.
17. DUCTBANKS SLOPED TOWARD HANDHOLES 3" PER 100' FOR DRAINAGE.
18. 3/4" DIA. X 10' COPPER CLAD GROUND INSTALLED AT EACH HANDHOLE. GND ROD PLACED 6FT FROM THE HANDHOLE. #1/0 BARE COPPER CADWELDED TO GND ROD AND ROUTED TO HANDHOLE TO GND COVER AND CONDUITS.

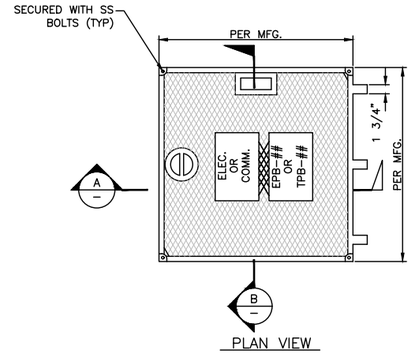

PLAN VIEW

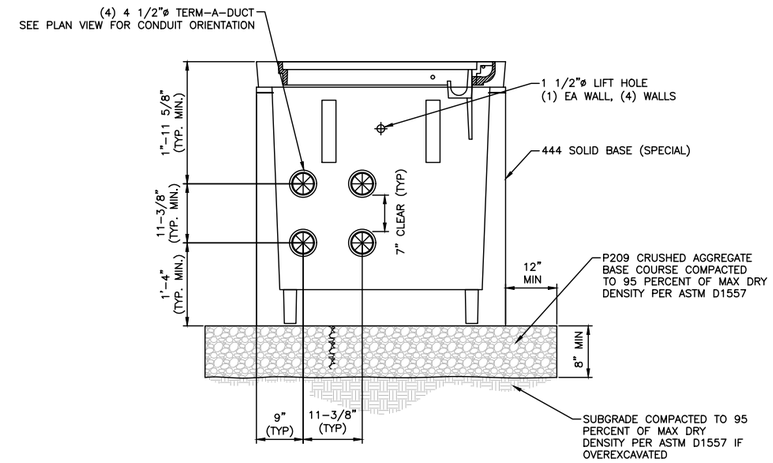

B SECTION
NOT TO SCALE

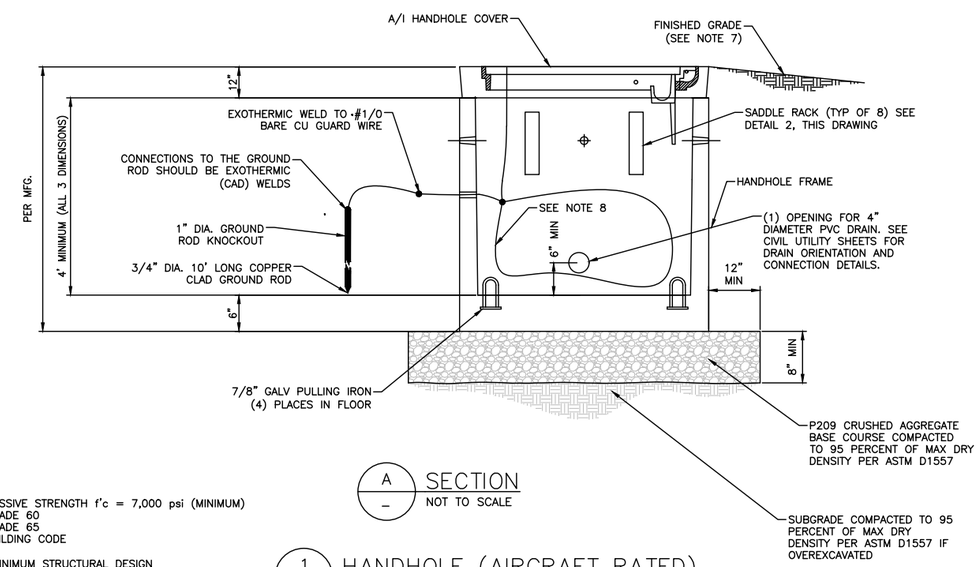

A SECTION
NOT TO SCALE

1 HANDHOLE (AIRCRAFT RATED)
NOT TO SCALE

STRUCTURAL NOTES:

1. CONCRETE: 28 DAY COMPRESSIVE STRENGTH f'c = 7,000 psi (MINIMUM)
2. REBAR: ASTM A-615 GRADE 60
3. MESH: ASTM A-185 GRADE 65
4. DESIGN: ACI-318-05 BUILDING CODE
5. LOADS: 120.00 kip
   ASTM C-857 "MINIMUM STRUCTURAL DESIGN LOADING FOR UNDERGROUND PRECAST CONCRETE UTILITY STRUCTURES"
   30% IMPACT FOR LESS THAN 2'-0" SOIL COVER
   SOIL DENSITY 120 pcf
   40 pcf E.F.P. LATERAL SOIL PRESSURE ABOVE WATER TABLE
   80 pcf E.F.P. LATERAL SOIL PRESSURE BELOW WATER TABLE
   80 psf LIVE LOAD SURCHARGE
   NO LIVE LOAD SURCHARGE FOR SOIL COVER > 8'-0"
   TOP OF VAULT 5'-0" BELOW FINISHED GRADE (MAXIMUM)
   WATER TABLE 5'-0" BELOW FINISHED GRADE (ASSUMED)
   REQUIRES 8,000 PSF MINIMUM ALLOWABLE SOIL BEARING PRESSURE

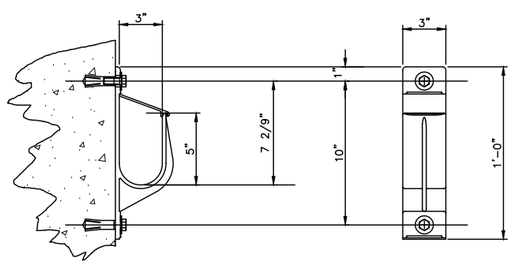

2 SADDLE RACK
NOT TO SCALE

SADDLE RACK INSTALLATION GUIDE LINES:

1. BE SURE THE SURFACE OF THE CONCRETE WALL IS FLAT AND SMOOTH.
2. ONE FASTENER SHOULD BE INSTALLED IN EACH OF THE SADDLE RACKS ELONGATED HOLES.
3. INSTALL EACH DROP-IN ANCHOR AS SHOWN ON THIS DRAWING AND AS DESCRIBED BELOW:
   A. DRILL A 5/8" DIA. HOLE 2-3/32" DEEP.
   B. BLOW OUT HOLE.
   C. DRIVE ANCHOR 3/32" TO 5/32" BELOW THE SURFACE OF THE CONCRETE.
   D. EXPAND ANCHOR WITH FRT112 SETTING TOOL. ANCHOR IS PROPERLY SET WHEN SHOULDER OF SETTING TOOL IS FLUSH WITH THE TOP OF ANCHOR.
4. INSTALL THE FLAT WASHER AND TIGHTEN THE CAP SCREW JUST ENOUGH TO ATTAIN A SNUG FIT. AVOID HIGH SCREW TORQUE WHICH INDUCES COMPRESSIVE STRESS.

CITY & COUNTY of DENVER

DENVER INTERNATIONAL AIRPORT

LEAN ENGINEERING

RUNWAY 17R-35L COMPLEX PAVEMENT REHABILITATION PACKAGE 1

ISSUE RECORD

NO.	BY	PURPOSE	DATE	CKD
1	LE	50% DESIGN	09/14/18	DL
2	LE	90% DESIGN	10/26/18	DL
3	LE	BID	12/26/18	DL
4	LE	CONSTRUCTION	2/15/19	DL

SCALE: AS INDICATED

DATE: FEBRUARY 15, 2019

DRAWN BY: KV

CHECKED BY: JA

FAA AIP NO:

WORK BREAKDOWN NO.

DESIGN CONTRACT NO. 201735882

CONST. CONTRACT NO. 201846271

VOLUME NO.

SHEET TITLE: MANHOLE INSTALLATION DETAIL

SHEET NO. EL531

CADD FILE NO. _201735882-B1EELD-5261

D:\dropbox (lean photometrics)\active projects\1571801a rah den 17r-35l reconstruction\01 drawings\working drawings\sheets_201735882-B1EELD-5261.dwg Feb 12, 2019 - 5:21pm Kat

NOTES:

1. SEE SHEETS E-001 FOR GENERAL ELECTRICAL NOTES.

DEMO NOTES:

1. PROVIDE NEW 6.6A/6.6A TRANSFORMER FEED TO WINDCONE.

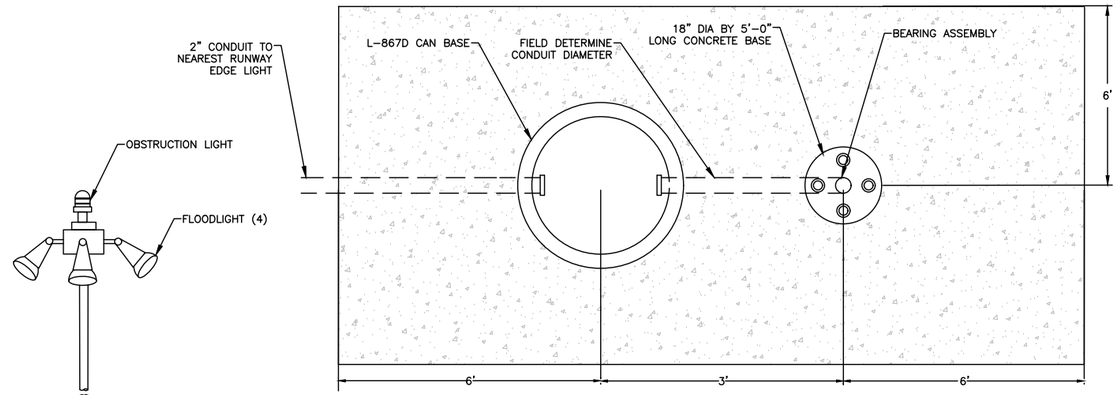

2B — PERMANENT RELOCATION OF SECONDARY WINDCONE: TOP VIEW
NOT TO SCALE

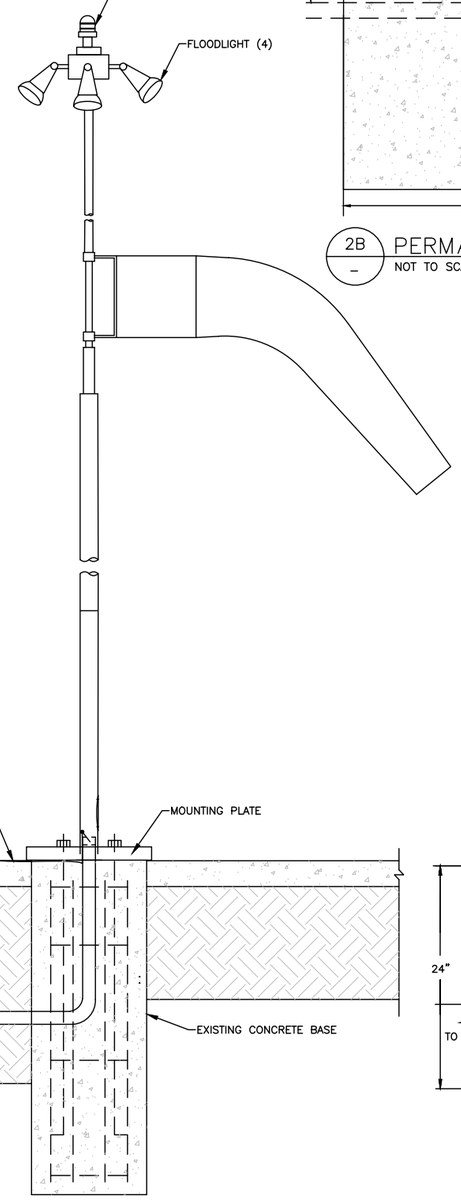

1 — DEMO RUNWAY 17/35 WIND CONE DETAIL (BOTH EXISTING WINDCONES)
NOT TO SCALE (FOR REFERENCE ONLY)

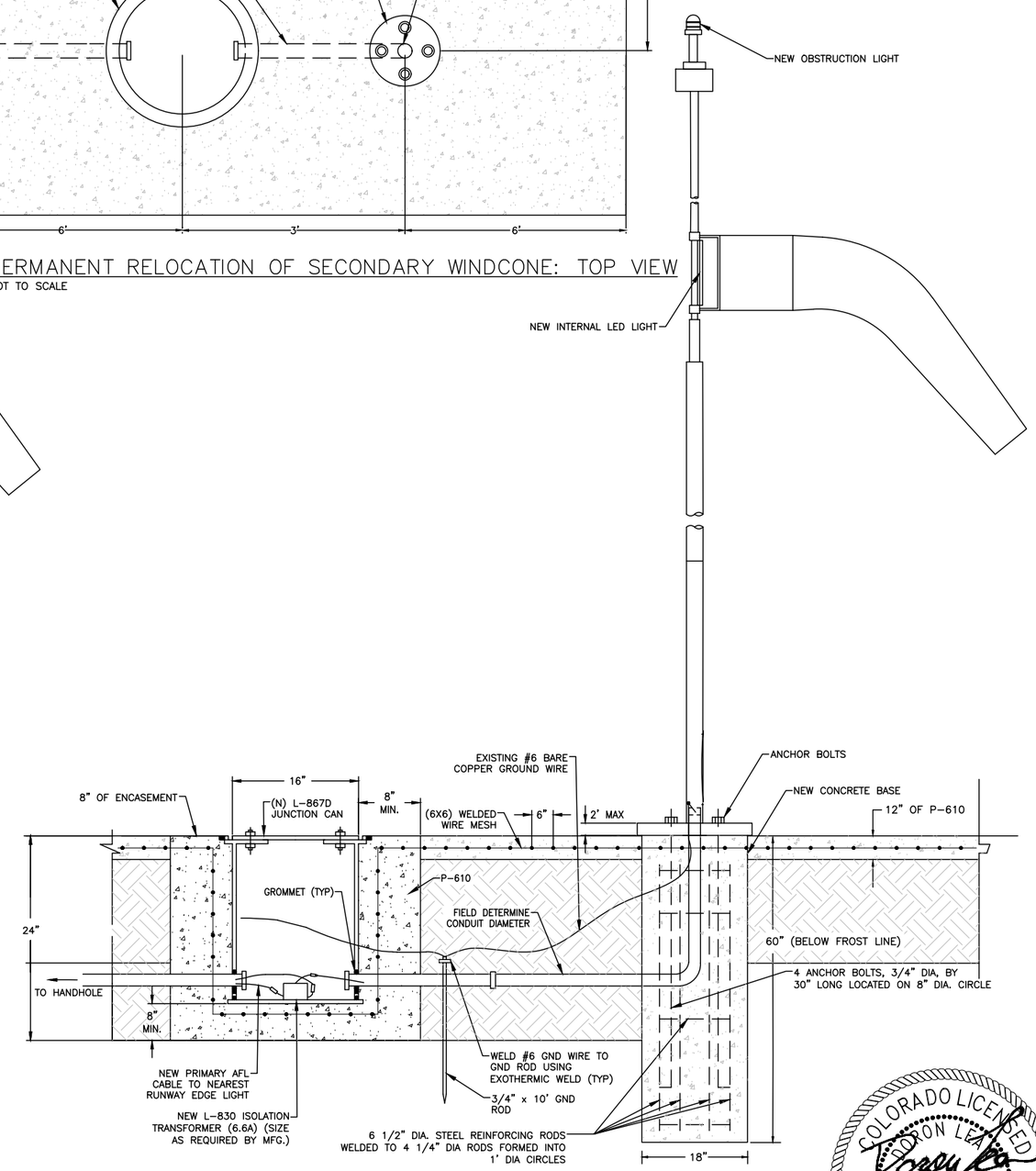

2 — NEW L-806 SECONDARY RUNWAY 35L WIND CONE DETAIL
NOT TO SCALE

COLORADO LICENSED
TORON LEAN
52246
2/15/19
PROFESSIONAL ENGINEER

CITY & COUNTY of DENVER

DENVER INTERNATIONAL AIRPORT

LEAN ENGINEERING

RUNWAY 17R-35L COMPLEX PAVEMENT REHABILITATION PACKAGE 1

ISSUE RECORD

NO.	BY	PURPOSE	DATE	CKD
1	LE	50% DESIGN	09/14/18	DL
2	LE	90% DESIGN	10/26/18	DL
3	LE	BID	12/26/18	DL
4	LE	CONSTRUCTION	2/15/19	DL

SCALE: AS INDICATED

DATE: FEBRUARY 15, 2019

DRAWN BY: KV

CHECKED BY: JA

FAA AIP NO:

WORK BREAKDOWN NO.

DESIGN CONTRACT NO. 201735882

CONST. CONTRACT NO. 201846271

VOLUME NO.

SHEET TITLE: DEMO AND NEW SECONDARY WINDCONE

SHEET NO. EL532

CADD FILE NO. _201735882-B1EELD-5261

D:\dropbox (lean photometrics)\active projects\1571801a rah den 17-35l reconstruction\01 drawings\working drawings\Sheets_201735882-B1EELD-5261.dwg Feb 12, 2019 - 5:21pm Kat

NOTES:

1. SEE SHEETS E-001 FOR GENERAL ELECTRICAL NOTES.

DEMO NOTES:

1. PROVIDE NEW 6.6A/6.6A TRANSFORMER FEED TO WINDCONE.

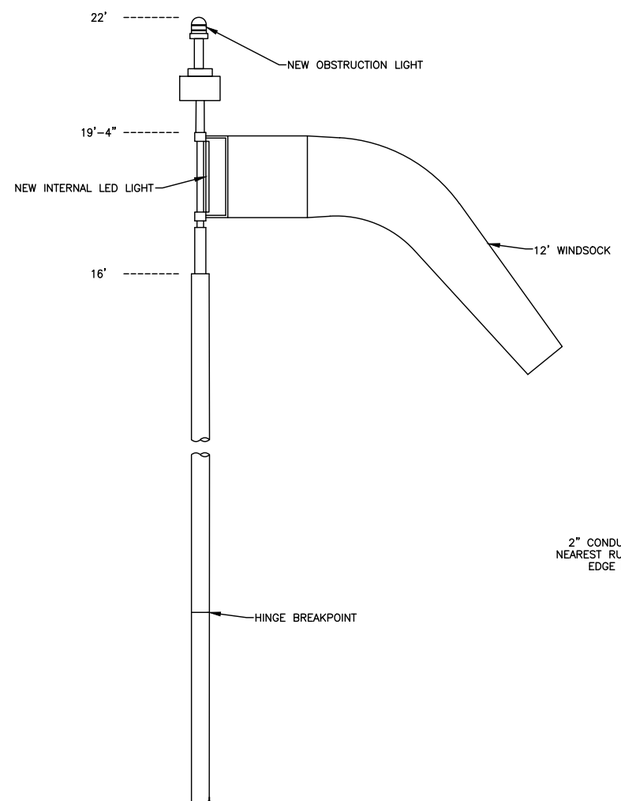

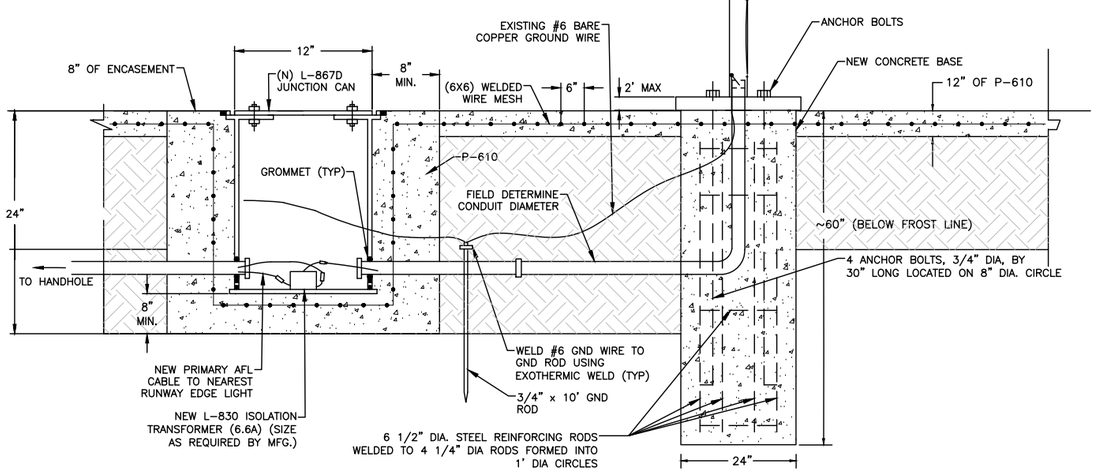

1 / _ NEW L-807 PRIMARY RUNWAY 17R WIND CONE DETAIL

NOT TO SCALE

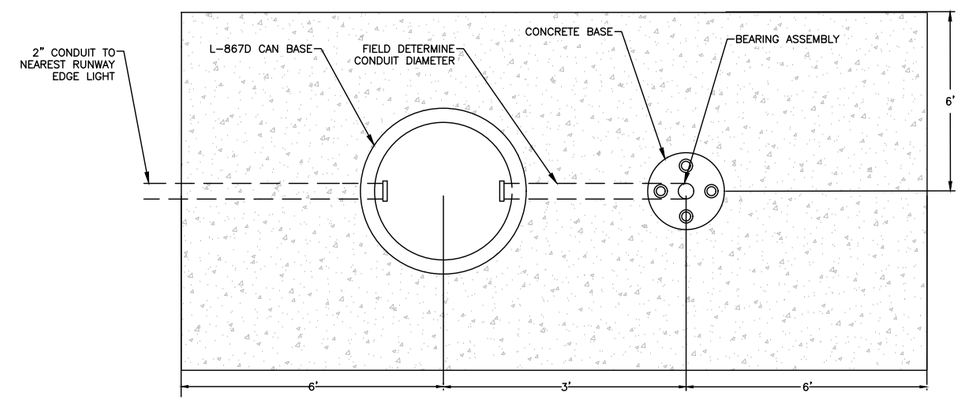

1B / _ PERMANENT RELOCATION OF PRIMARY WINDCONE: TOP VIEW

NOT TO SCALE

CITY & COUNTY of DENVER

DENVER INTERNATIONAL AIRPORT

LEAN ENGINEERING

RUNWAY 17R-35L COMPLEX PAVEMENT REHABILITATION PACKAGE 1

ISSUE RECORD

NO.	BY	PURPOSE	DATE	CKD
1	LE	50% DESIGN	09/14/18	DL
2	LE	90% DESIGN	10/26/18	DL
3	LE	BID	12/26/18	DL
4	LE	CONSTRUCTION	2/15/19	DL

SCALE: AS INDICATED

DATE: FEBRUARY 15, 2019

DRAWN BY: KV

CHECKED BY: JA

FAA AIP NO:

WORK BREAKDOWN NO.

DESIGN CONTRACT NO. 201735882

CONST. CONTRACT NO. 201846271

VOLUME NO.

SHEET TITLE: NEW PRIMARY WINDCONE

SHEET NO. EL533

CADD FILE NO. _201735882-B1EELD-5261

D:\dropbox (lean photometrics)\active projects\1571801a rsh den 17r-35l reconstruction\01 drawings\working drawings\Sheets_201735882-B1EELD-5261.dwg Feb 12, 2019 - 5:21pm Kat

NOTES:

ALL ABOVE GROUND EQUIPMENT TO BE SALVAGED AND DELIVERED TO AIRPORT MAINTENANCE FOR SPARE PARTS.

A / – PICTURE OF EXISTING RPU
NOT TO SCALE

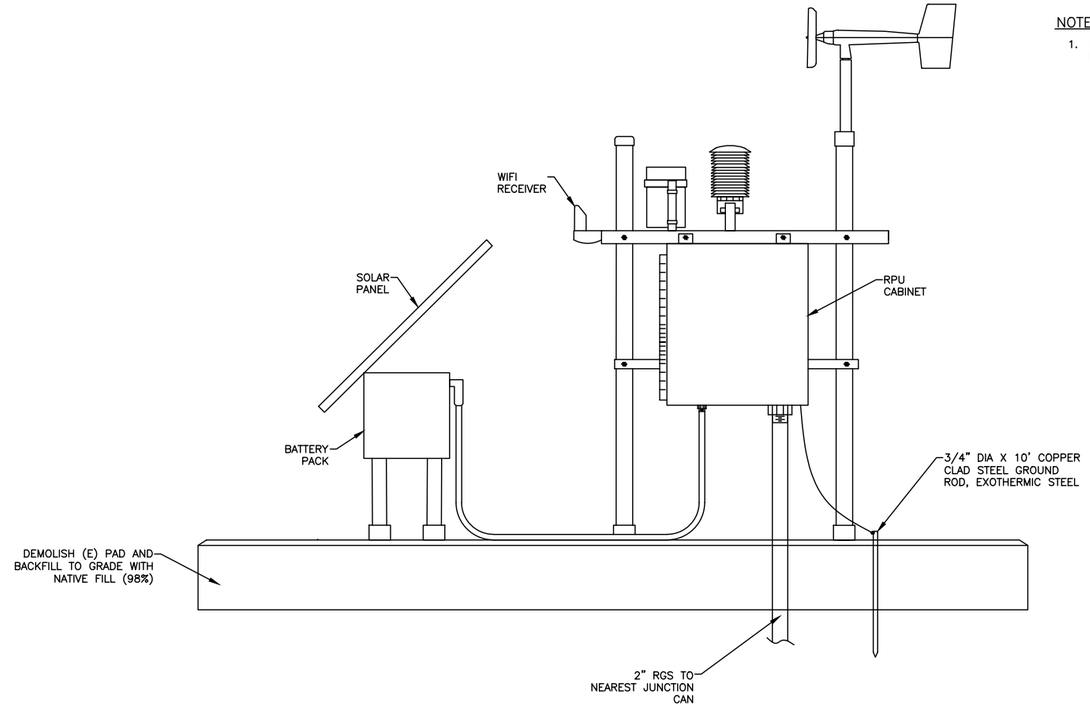

B / – SIDE VIEW
NOT TO SCALE

NOTES:

1. SEE SHEETS E-001 FOR GENERAL ELECTRICAL NOTES.

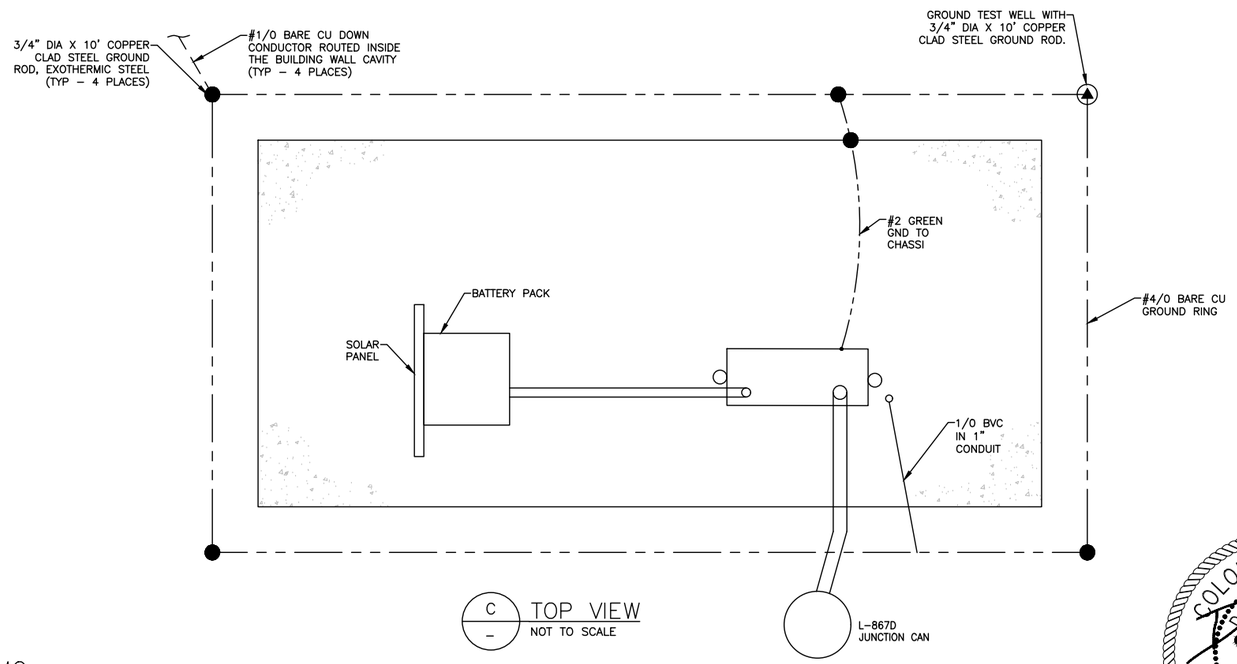

C / – TOP VIEW
NOT TO SCALE

1 / – RPU-SOUTH – DEMO
NOT TO SCALE

COLORADO LICENSED
DORON LEAN
52246
2/15/19
PROFESSIONAL ENGINEER

CITY & COUNTY of DENVER

DENVER INTERNATIONAL AIRPORT

LEAN ENGINEERING

RUNWAY 17R-35L COMPLEX PAVEMENT REHABILITATION PACKAGE 1

ISSUE RECORD

NO.	BY	PURPOSE	DATE	CKD
1	LE	50% DESIGN	09/14/18	DL
2	LE	90% DESIGN	10/26/18	DL
3	LE	BID	12/26/18	DL
4	LE	CONSTRUCTION	2/15/19	DL

SCALE: AS INDICATED

DATE: FEBRUARY 15, 2019

DRAWN BY: KV

CHECKED BY: JA

FAA AIP NO:

WORK BREAKDOWN NO.

DESIGN CONTRACT NO. 201735882

CONST. CONTRACT NO. 201846271

VOLUME NO.

SHEET TITLE: RPU-SOUTH REMOVAL

SHEET NO. EL551

CADD FILE NO. _201735882-B1EELD-5264

D:\dropbox (lean photometrics)\active projects\157180la rah den 17r-35l reconstruction\01 drawings\working drawings\Sheets_201735882-B1EELD-5264.dwg Feb 13, 2019 – 4:10pm Kat

NOTES:

1. SEE SHEETS E-001 FOR GENERAL ELECTRICAL NOTES.

NOTES:

ALL ABOVE GROUND EQUIPMENT TO BE SALVAGED AND DELIVERED TO AIRPORT MAINTENANCE FOR SPARE PARTS.

A / – PICTURE OF EXISTING RPU
NOT TO SCALE

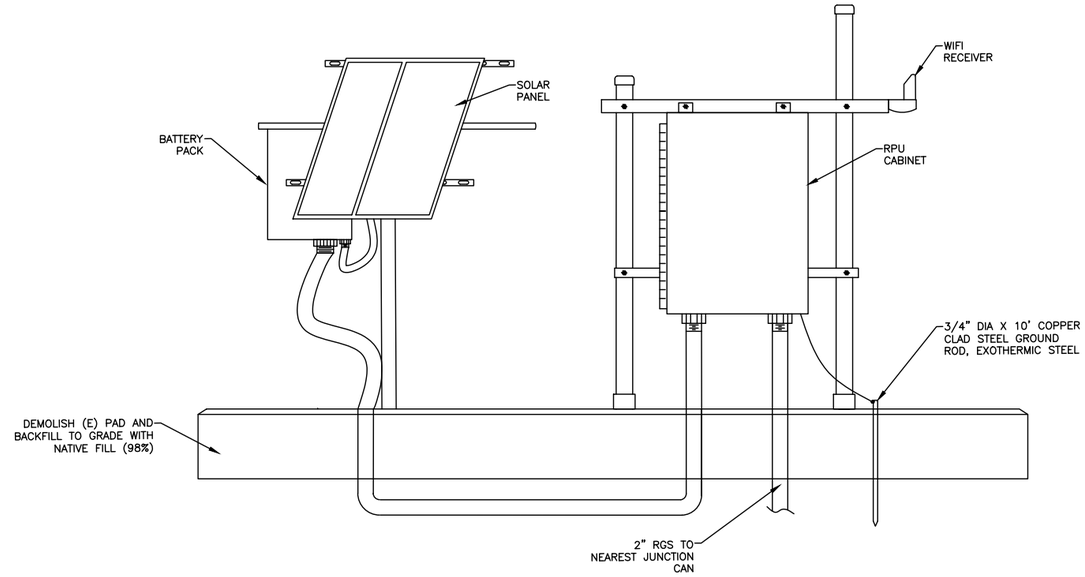

B / – SIDE VIEW
NOT TO SCALE

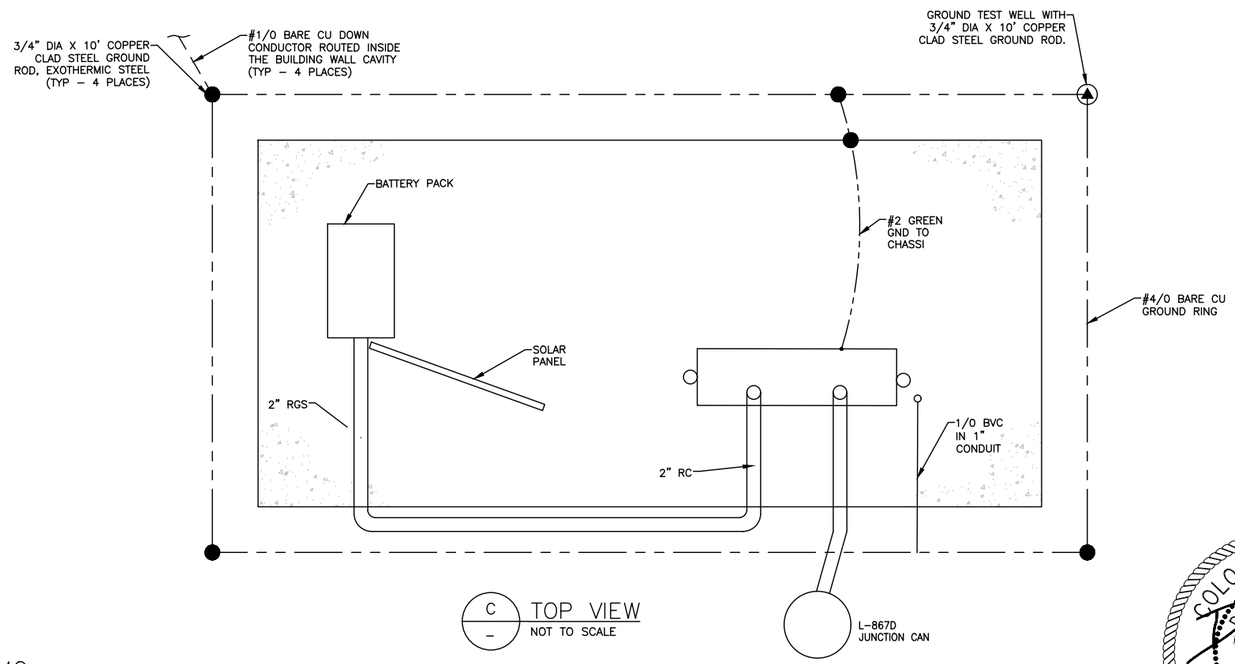

C / – TOP VIEW
NOT TO SCALE

1 / – RPU-NORTH – DEMO
NOT TO SCALE

COLORADO LICENSED
DORON LEAN
52246
2/15/19
PROFESSIONAL ENGINEER

CITY & COUNTY of DENVER

DENVER INTERNATIONAL AIRPORT

LEAN ENGINEERING

RUNWAY 17R-35L COMPLEX PAVEMENT REHABILITATION PACKAGE 1

ISSUE RECORD

NO.	BY	PURPOSE	DATE	CKD
1	LE	50% DESIGN	09/14/18	DL
2	LE	90% DESIGN	10/26/18	DL
3	LE	BID	12/26/18	DL
4	LE	CONSTRUCTION	2/15/19	DL

SCALE: AS INDICATED

DATE: FEBRUARY 15, 2019

DRAWN BY: KV

CHECKED BY: JA

FAA AIP NO:

WORK BREAKDOWN NO.

DESIGN CONTRACT NO. 201735882

CONST. CONTRACT NO. 201846271

VOLUME NO.

SHEET TITLE

RPU-NORTH REMOVAL

SHEET NO. EL552

CADD FILE NO. _201735882-B1EELD-5264

D:\dropbox (lean photometrics)\active projects\1571801a rah den 17r-35l reconstruction\01 drawings\working drawings\Sheets_201735882-B1EELD-5264.dwg Feb 13, 2019 – 4:10pm Kat

NOTES:

1. SEE SHEETS E-001 FOR GENERAL ELECTRICAL NOTES.
2. PERFORM POT-HOLING & UTILITY SURVEY. BLUE-STAKE CONFIGURATION OF ELECTRICAL EQUIPMENT & OBTAIN ENGINEER'S APPROVAL PRIOR TO EXCAVATION.

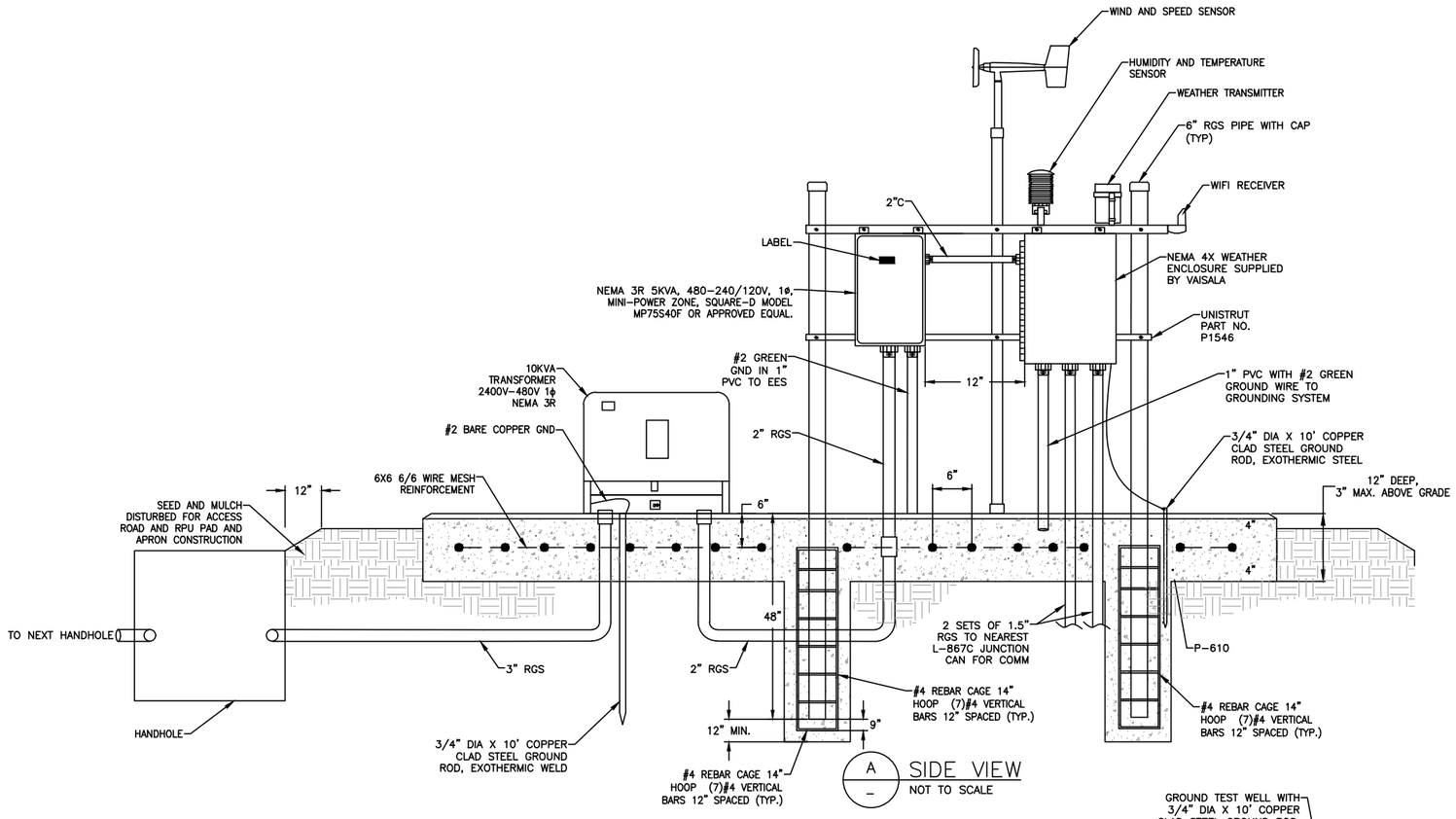

A — SIDE VIEW
NOT TO SCALE

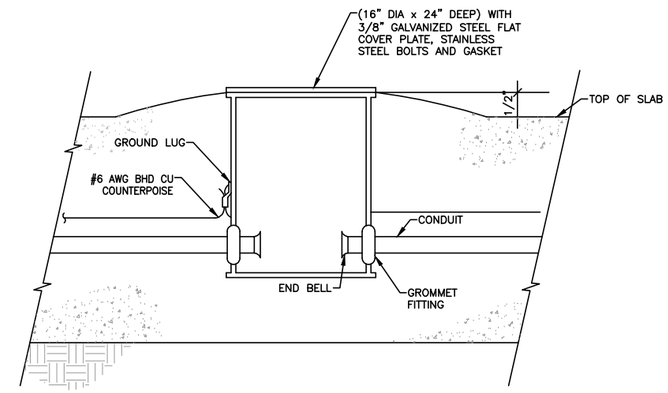

C — L-867 BASE CAN INSTALLATION
NOT TO SCALE

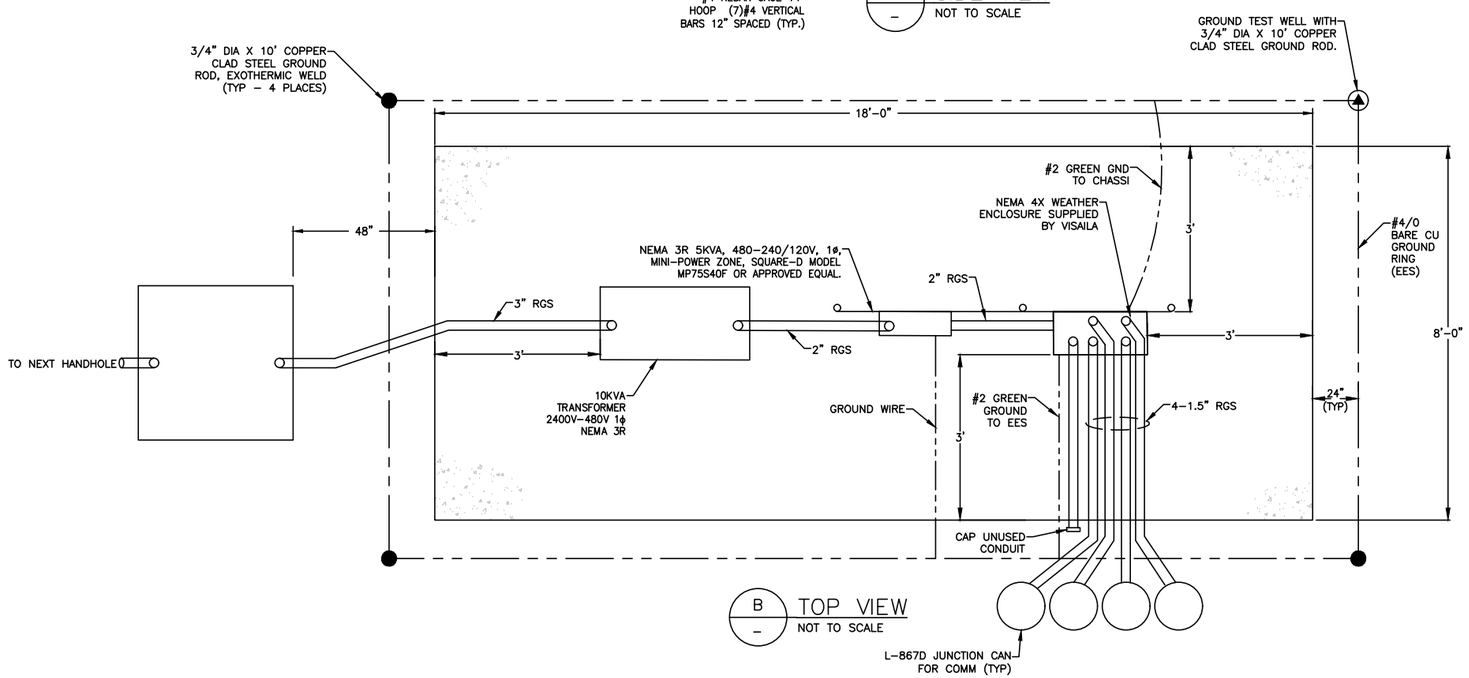

B — TOP VIEW
NOT TO SCALE

1 — RPU-SOUTH - NEW
NOT TO SCALE

CITY & COUNTY of DENVER

DENVER INTERNATIONAL AIRPORT

LEAN ENGINEERING

RUNWAY 17R-35L COMPLEX PAVEMENT REHABILITATION PACKAGE 1

ISSUE RECORD

NO.	BY	PURPOSE	DATE	CKD
1	LE	50% DESIGN	09/14/18	DL
2	LE	90% DESIGN	10/26/18	DL
3	LE	BID	12/26/18	DL
4	LE	ADDENDUM 2	1/17/19	DL
5	LE	CONSTRUCTION	2/15/19	DL

SCALE: AS INDICATED

DATE: FEBRUARY 15, 2019

DRAWN BY: KV

CHECKED BY: JA

FAA AIP NO:

WORK BREAKDOWN NO.

DESIGN CONTRACT NO. 201735882

CONST. CONTRACT NO. 201846271

VOLUME NO.

SHEET TITLE: RPU-SOUTH NEW

SHEET NO. EL553

CADD FILE NO. _201735882-B1EELD-5264

COLORADO LICENSED PROFESSIONAL ENGINEER — DIXON LEAN 52246 — 2/15/19

D:\dropbox (lean photometrics)\active projects\1571801a rpu den 17r-35l reconstruction\01 drawings\working drawings\Sheets_201735882-B1EELD-5264.dwg Feb 13, 2019 - 4:20pm Kat

NOTES:

1. SEE SHEETS E-001 FOR GENERAL ELECTRICAL NOTES.
2. PERFORM POT-HOLING & UTILITY SURVEY. BLUE-STAKE CONFIGURATION OF ELECTRICAL EQUIPMENT & OBTAIN ENGINEER'S APPROVAL PRIOR TO EXCAVATION.

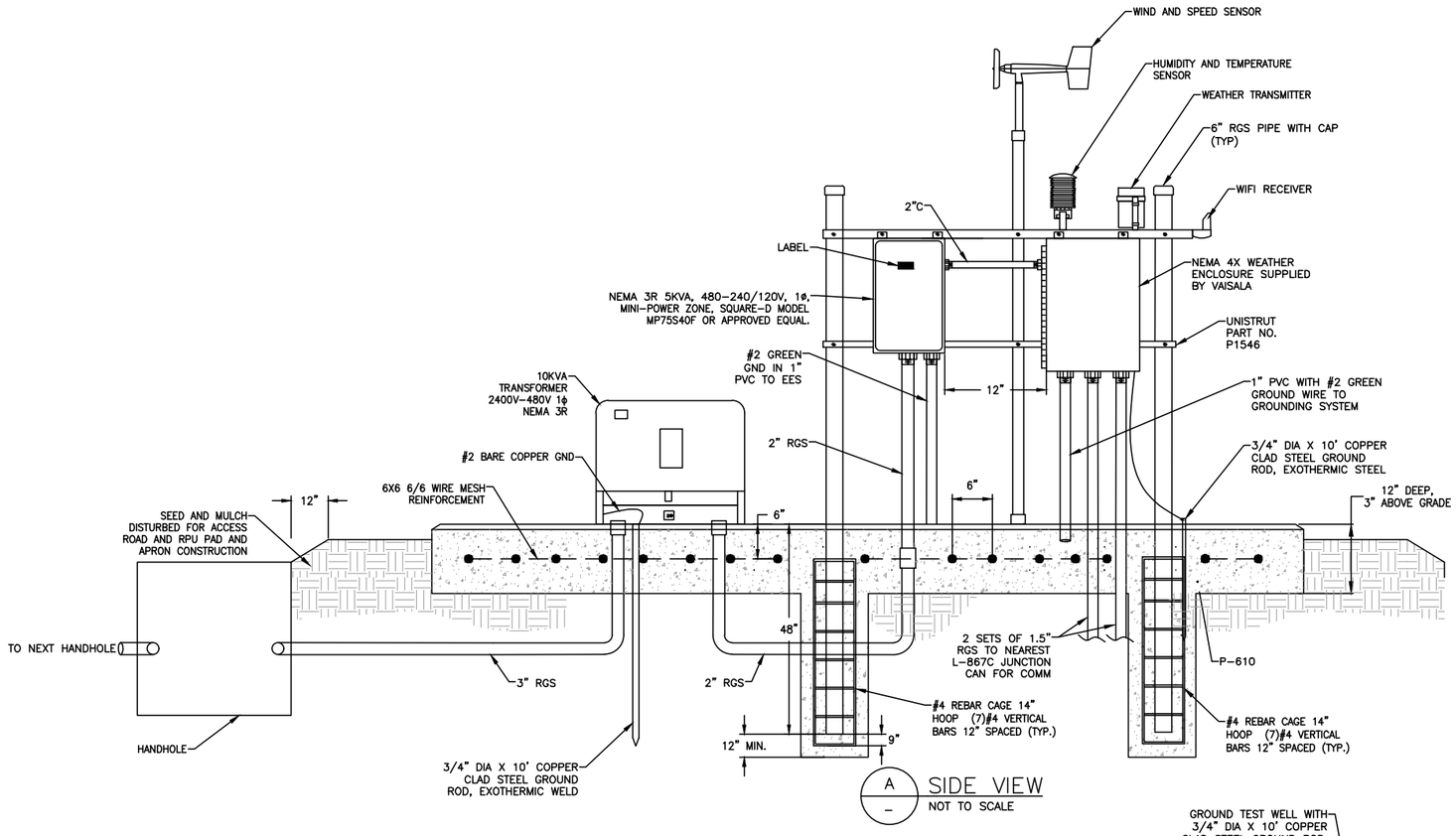

A — SIDE VIEW
NOT TO SCALE

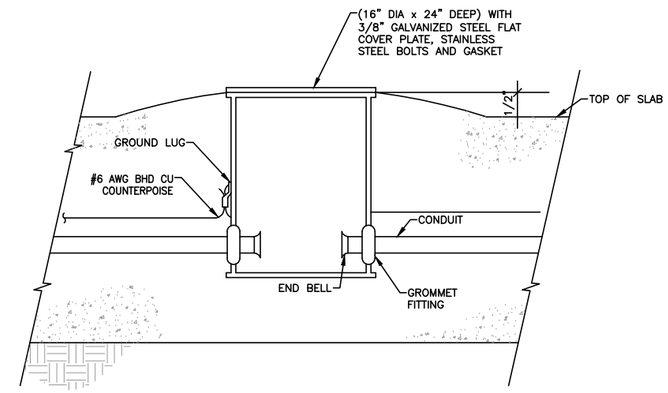

C — L-867 BASE CAN INSTALLATION
NOT TO SCALE

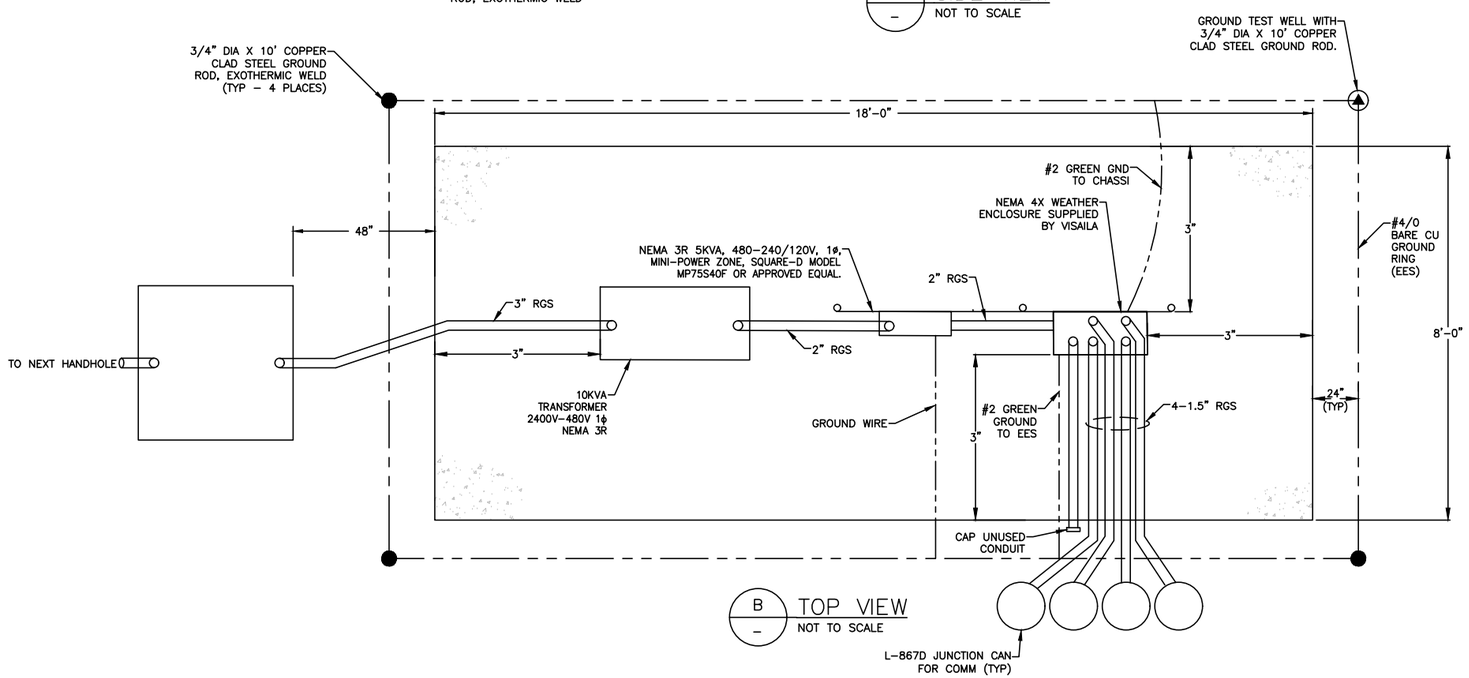

B — TOP VIEW
NOT TO SCALE

1 — RPU-NORTH - NEW
NOT TO SCALE

CITY & COUNTY of DENVER

DENVER INTERNATIONAL AIRPORT

LEAN ENGINEERING

RUNWAY 17R-35L COMPLEX PAVEMENT REHABILITATION PACKAGE 1

ISSUE RECORD

NO.	BY	PURPOSE	DATE	CKD
1	LE	50% DESIGN	09/14/18	DL
2	LE	90% DESIGN	10/26/18	DL
3	LE	BID	12/26/18	DL
4	LE	ADDENDUM 2	1/17/19	DL
5	LE	CONSTRUCTION	2/15/19	DL

SCALE: AS INDICATED

DATE: FEBRUARY 15, 2019

DRAWN BY: KV

CHECKED BY: JA

FAA AIP NO:

WORK BREAKDOWN NO.

DESIGN CONTRACT NO. 201735882

CONST. CONTRACT NO. 201846271

VOLUME NO.

SHEET TITLE: RPU-NORTH NEW

SHEET NO. EL554

CADD FILE NO. _201735882-B1EELD-5264

COLORADO LICENSED PROFESSIONAL ENGINEER — DIXON LEAK 52246 — 2/15/19

D:\dropbox (lean photometrics)\active projects\1571801a rpu den 17r-35l reconstruction\01 drawings\working drawings\Sheets_201735882-B1EELD-5264.dwg Feb 13, 2019 - 4:20pm Kat

NOTES:

1. SEE SHEETS E-001 FOR GENERAL ELECTRICAL NOTES.

KEY NOTES:

1 SLICE EXISTING SSI CABLE INTO NEW SSI CABLE.

LEGEND:

- EXISTING TYPE V SSI CABLE
- NEW TYPE V SSI CABLE
- EXISTING SURFACE SCAN SENSOR
- NEW SURFACE SCAN SENSOR
- ELECTRICAL MANHOLE
- NEW TEMPERATURE PROBE

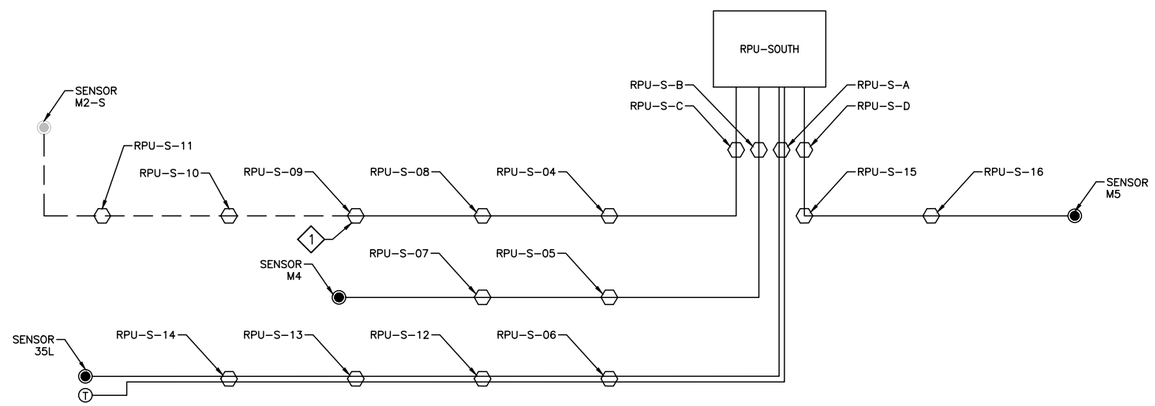

1 / – RPU-SOUTH – SINGLE LINE
NOT TO SCALE

CITY & COUNTY of DENVER

DENVER INTERNATIONAL AIRPORT

LEAN ENGINEERING

RUNWAY 17R-35L COMPLEX PAVEMENT REHABILITATION PACKAGE 1

ISSUE RECORD

NO.	BY	PURPOSE	DATE	CKD
1	LE	50% DESIGN	09/14/18	DL
2	LE	90% DESIGN	10/26/18	DL
3	LE	BID	12/26/18	DL
4	LE	CONSTRUCTION	2/15/19	DL

SCALE: AS INDICATED

DATE: FEBRUARY 15, 2019

DRAWN BY: KV

CHECKED BY: JA

FAA AIP NO:

WORK BREAKDOWN NO.

DESIGN CONTRACT NO. 201735882

CONST. CONTRACT NO. 201846271

VOLUME NO.

SHEET TITLE: RPU-SOUTH SINGLE LINE

SHEET NO. EL555

CADD FILE NO. _201735882-B1EELD-5264

COLORADO LICENSED
AARON LEA
52246
2/15/19
PROFESSIONAL ENGINEER

D:\dropbox (lean photometrics)\active projects\1571801a rah den 17r-35l reconstruction\01 drawings\working drawings\sheets_201735882-B1EELD-5264.dwg Feb 13, 2019 - 4:10pm Kat

NOTES:

1. SEE SHEETS E-001 FOR GENERAL ELECTRICAL NOTES.

KEY NOTES:

1 SLICE EXISTING SSI CABLE INTO NEW SSI CABLE.

LEGEND:

- EXISTING TYPE V SSI CABLE
- NEW TYPE V SSI CABLE
- EXISTING SURFACE SCAN SENSOR
- NEW SURFACE SCAN SENSOR
- ELECTRICAL MANHOLE
- NEW TEMPERATURE PROBE

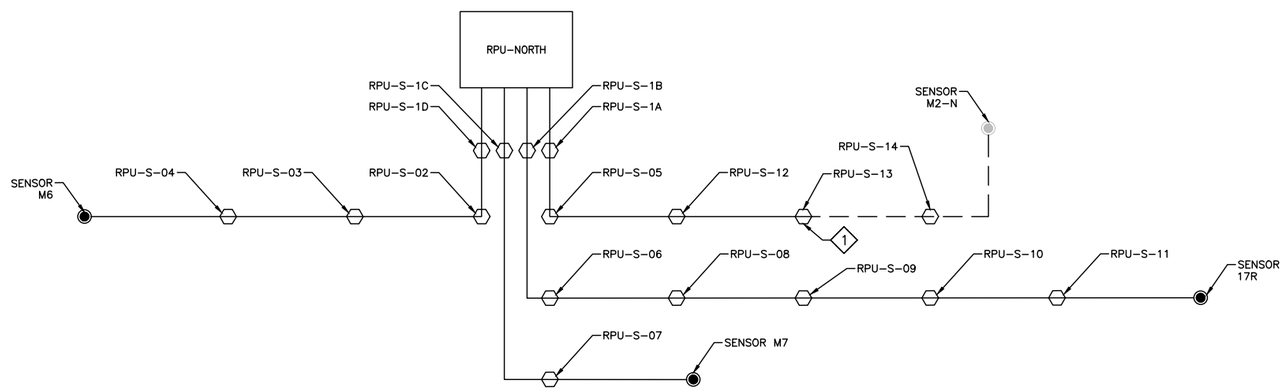

1 RPU-NORTH – SINGLE LINE
NOT TO SCALE

CITY & COUNTY of DENVER

DENVER INTERNATIONAL AIRPORT

LEAN ENGINEERING

RUNWAY 17R-35L COMPLEX PAVEMENT REHABILITATION PACKAGE 1

ISSUE RECORD

NO.	BY	PURPOSE	DATE	CKD
1	LE	50% DESIGN	09/14/18	DL
2	LE	90% DESIGN	10/26/18	DL
3	LE	BID	12/26/18	DL
4	LE	CONSTRUCTION	2/15/19	DL

SCALE: AS INDICATED

DATE: FEBRUARY 15, 2019

DRAWN BY: KV

CHECKED BY: JA

FAA AIP NO:

WORK BREAKDOWN NO.

DESIGN CONTRACT NO. 201735882

CONST. CONTRACT NO. 201846271

VOLUME NO.

SHEET TITLE: RPU-NORTH SINGLE LINE

SHEET NO. EL556

CADD FILE NO. _201735882-B1EELD-5264

D:\dropbox (lean photometrics)\active projects\1571801a rah den 17r-35l reconstruction\01 drawings\working drawings\sheets_201735882-B1EELD-5264.dwg Feb 13, 2019 - 4:10pm Kat

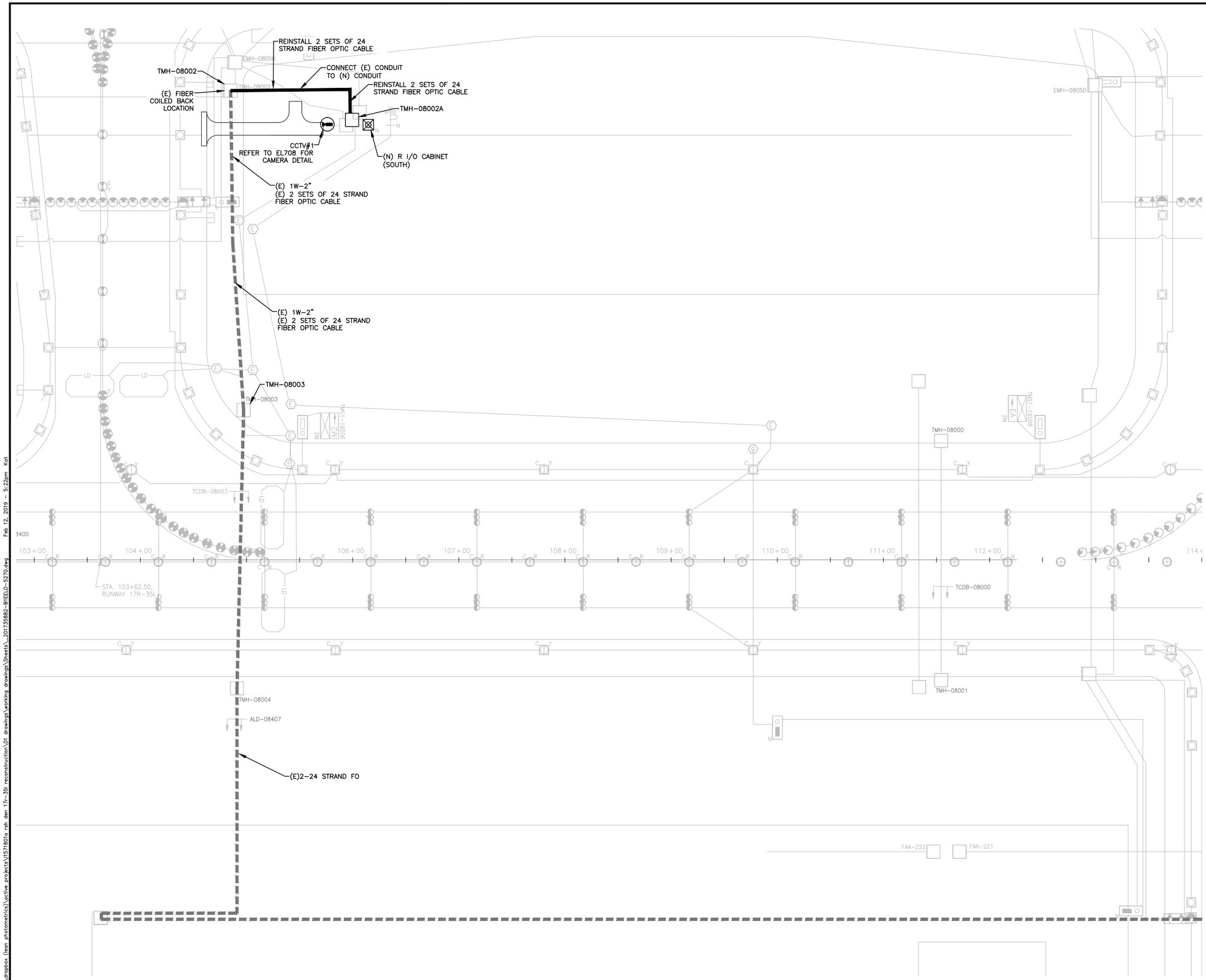

CITY & COUNTY of DENVER

DENVER INTERNATIONAL AIRPORT

LEAN ENGINEERING

RUNWAY 17R-35L COMPLEX PAVEMENT REHABILITATION PACKAGE 1

ISSUE RECORD

NO.	BY	PURPOSE	DATE	CKD
1	LE	50% DESIGN	09/14/18	DL
2	LE	90% DESIGN	10/26/18	DL
3	LE	BID	12/26/18	DL
4	LE	CONSTRUCTION	2/15/19	DL

SCALE: AS INDICATED

DATE: FEBRUARY 15, 2019

DRAWN BY: KV

CHECKED BY: JA

FAA AIP NO:

WORK BREAKDOWN NO.

DESIGN CONTRACT NO. 201735882

CONST. CONTRACT NO. 201846271

VOLUME NO.

SHEET TITLE

CCTV□1 ENLARGEMENT

SHEET NO. EL561

273 OF 396

CADD FILE NO. _201735882-B1EELD-5270

COLORADO LICENSED PROFESSIONAL ENGINEER DARON LEAN 52246 2/15/19

D:\dropbox (lean photometrics)\active projects\157801a rah den 17r-35l reconstruction\01 drawings\working drawings\Sheets_201735882-B1EELD-5270.dwg Feb 12, 2019 - 5:22pm Kat

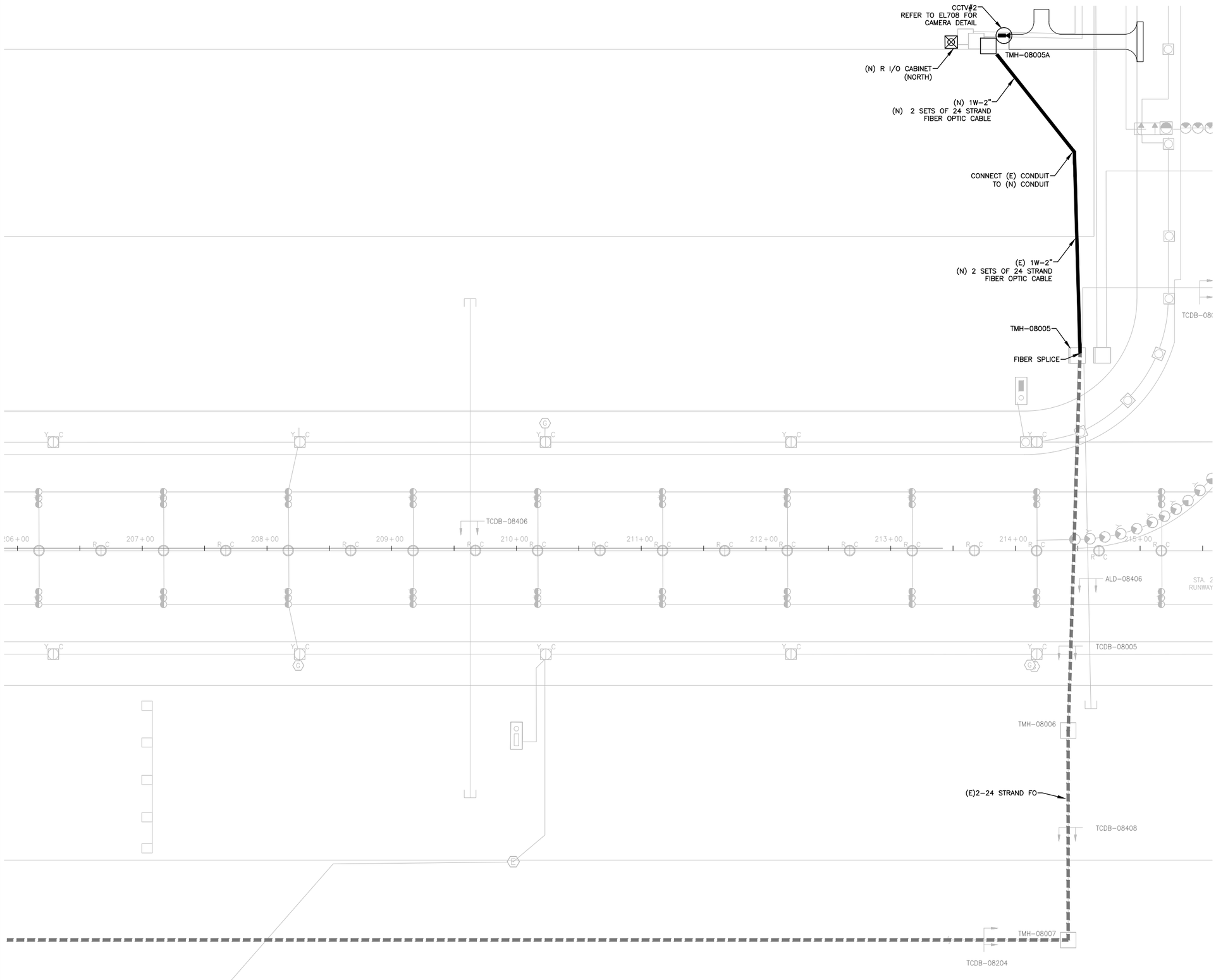

D:\dropbox (lean photometrics)\active projects\1571801a rah den 17r-35l reconstruction\01 drawings\working drawings\Sheets_201735882-B1EELD-5270.dwg Feb 12, 2019 - 5:22pm Kat

CITY & COUNTY of DENVER

DENVER INTERNATIONAL AIRPORT

LEAN ENGINEERING

RUNWAY 17R-35L COMPLEX PAVEMENT REHABILITATION PACKAGE 1

ISSUE RECORD

NO.	BY	PURPOSE	DATE	CKD
1	LE	50% DESIGN	09/14/18	DL
2	LE	90% DESIGN	10/26/18	DL
3	LE	BID	12/26/18	DL
4	LE	CONSTRUCTION	2/15/19	DL

SCALE: AS INDICATED

DATE: FEBRUARY 15, 2019

DRAWN BY: KV

CHECKED BY: JA

FAA AIP NO:

WORK BREAKDOWN NO.

DESIGN CONTRACT NO. 201735882

CONST. CONTRACT NO. 201846271

VOLUME NO.

SHEET TITLE

CCTV#2 ENLARGEMENT

SHEET NO. EL562

CADD FILE NO. _201735882-B1EELD-5270

COLORADO LICENSED PROFESSIONAL ENGINEER
DORON LEAN
52246
2/15/19

NOTES:

1. SEE SHEETS E-001 FOR GENERAL ELECTRICAL NOTES.

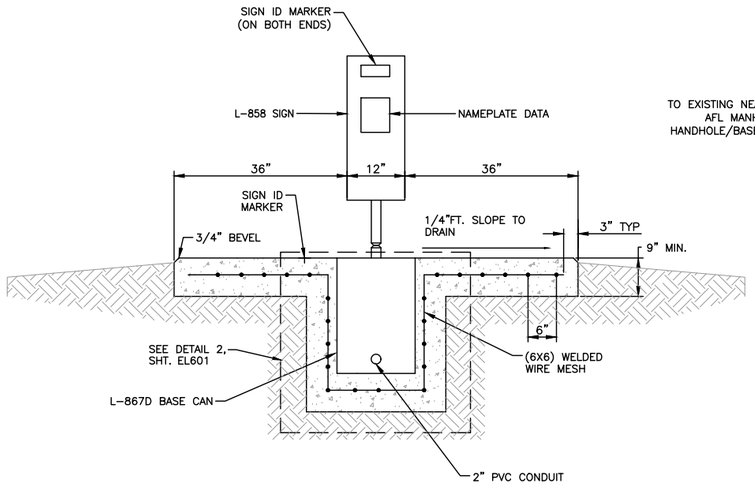

SIDE VIEW

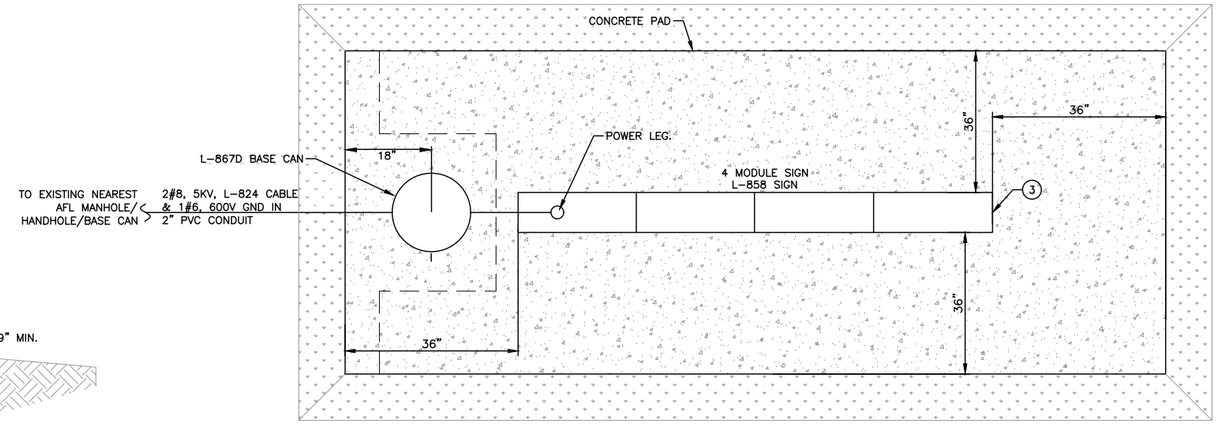

PLAN VIEW

KEY NOTES:

1. TETHER. MINIMUM 1 PER MODULE AND AT LEAST 2 TETHERS PER SIGN.
2. INSTALL NEW SIGNS PER MANUFACTURER MOUNTING PLATE TEMPLATE, RECOMMENDATIONS, AND INSTRUCTIONS. NUMBER AND SPACING OF LEGS AS PER MANUFACTURERS REQUIREMENTS.
3. PROVIDE GUIDANCE SIGN IDENTIFICATION MARKER ON EACH END OF THE SIGN (TOTAL OF TWO MARKERS PER SIGN).
4. INSTALL (N) TRANSFORMER & CONNECTOR PER DETAIL 2 ON EL602.
5. GRADE AREA PRIOR TO INSTALLATION PER CIVIL DRAWINGS.

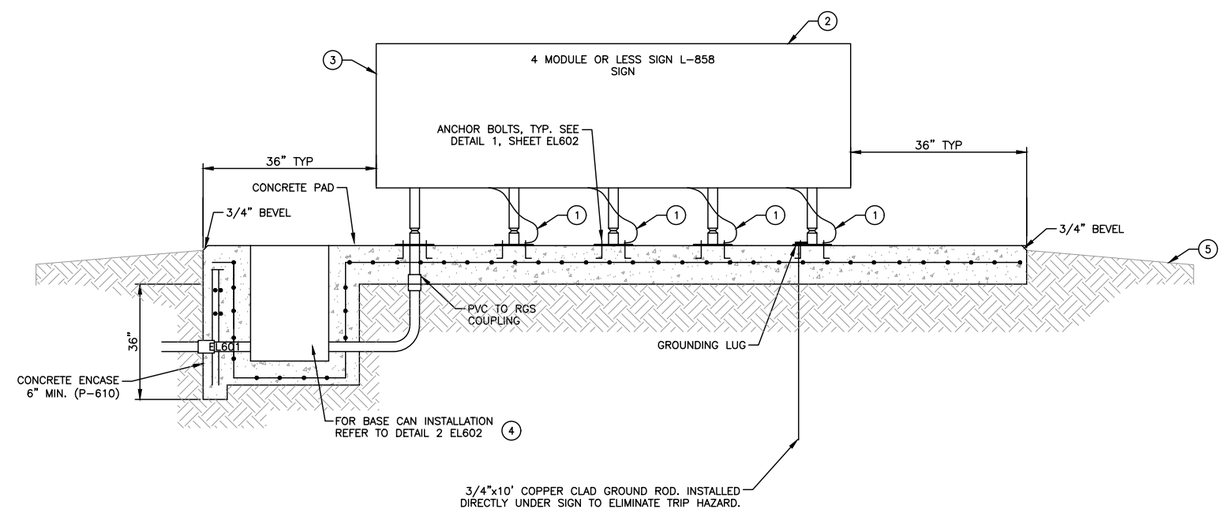

FRONT VIEW

1 / –

NEW LIGHTED GUIDANCE SIGNS 4 MODULES OR LESS INSTALLATION DETAILS ON NEW FOUNDATION

NOT TO SCALE

COLORADO LICENSED
DORON LEA
52246
2/15/19
PROFESSIONAL ENGINEER

CITY & COUNTY of DENVER

DENVER INTERNATIONAL AIRPORT

LEAN ENGINEERING

RUNWAY 17R-35L COMPLEX PAVEMENT REHABILITATION PACKAGE 1

ISSUE RECORD

NO.	BY	PURPOSE	DATE	CKD
1	LE	50% DESIGN	09/14/18	DL
2	LE	90% DESIGN	10/26/18	DL
3	LE	BID	12/26/18	DL
4	LE	CONSTRUCTION	2/15/19	DL

SCALE: AS INDICATED

DATE: FEBRUARY 15, 2019

DRAWN BY: KV

CHECKED BY: JA

FAA AIP NO:

WORK BREAKDOWN NO.

DESIGN CONTRACT NO. 201735882

CONST. CONTRACT NO. 201846271

VOLUME NO.

SHEET TITLE: SIGNAGE DETAIL 1

SHEET NO. EL601

CADD FILE NO. _201735882-B1EELD-5272

D:\dropbox (lean photometrics)\active projects\1571801a rah den 17r-35l reconstruction\01 drawings\working drawings\sheets_20173582-B1EELD-5272.dwg Feb 12, 2019 - 5:22pm Kat

NOTES:

1. SEE SHEETS E-001 FOR GENERAL ELECTRICAL NOTES.

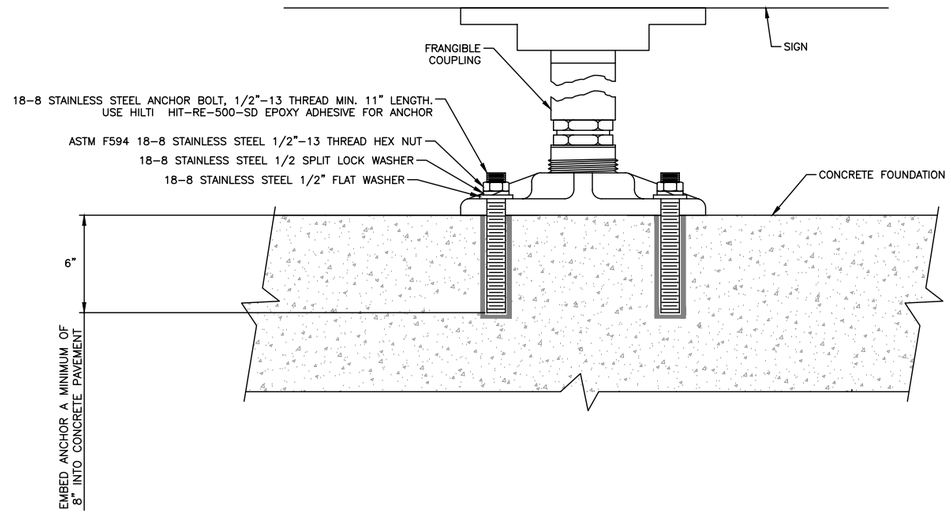

1 / – ANCHOLR BOLT DETAIL – NEW OR EXISTING CONCRETE SIGN FOUNDATION

NOT TO SCALE

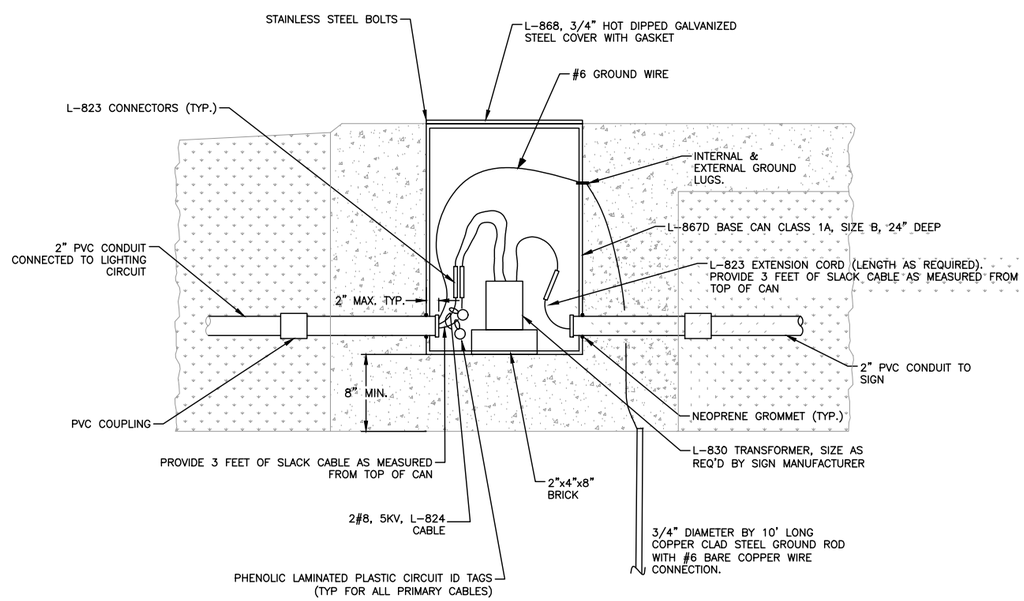

2 / – NEW AIRFIELD SIGN GUIDANCE BASE CAN DETAIL

NOT TO SCALE

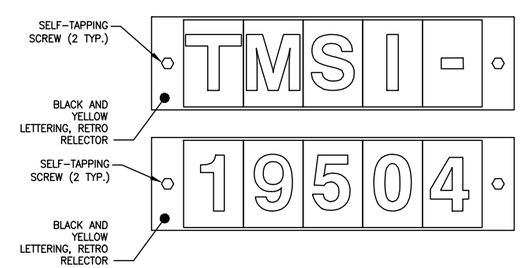

NOTE:
1. PROVIDE MINIMUM 2" TALL LETTERING (2 ROWS).
2. INSTALL 2 SETS OF ID MARKERS ON EACH SIDE OF THE SIGN.

3 / – TYPICAL SIGN ID TAG

NOT TO SCALE

CITY & COUNTY of DENVER

DENVER INTERNATIONAL AIRPORT

LEAN ENGINEERING

RUNWAY 17R-35L COMPLEX PAVEMENT REHABILITATION PACKAGE 1

ISSUE RECORD

NO.	BY	PURPOSE	DATE	CKD
1	LE	50% DESIGN	09/14/18	DL
2	LE	90% DESIGN	10/26/18	DL
3	LE	BID	12/26/18	DL
4	LE	ADDENDUM 2	1/17/19	DL
5	LE	CONSTRUCTION	2/15/19	DL

SCALE: AS INDICATED

DATE: FEBRUARY 15, 2019

DRAWN BY: KV

CHECKED BY: JA

FAA AIP NO:

WORK BREAKDOWN NO.

DESIGN CONTRACT NO. 201735882

CONST. CONTRACT NO. 201846271

VOLUME NO.

SHEET TITLE: SIGNAGE DETAIL 2

SHEET NO. EL602

CADD FILE NO. _201735882-B1EELD-5272

D:\dropbox (lean photometrics)\active projects\1571801a rah den 17r-35l reconstruction\01 drawings\working drawings\Sheets_201735882-B1EELD-5272.dwg Feb 12, 2019 - 5:22pm Kat

NOTES:

1. SEE SHEETS E-001 FOR GENERAL ELECTRICAL NOTES.

SHEET NOTES:

1. (R) EXISTING BOLTS BY CUTTING THEM FLAT WITH SURFACE.
2. PROTECT EXISTING GROUND WIRE TO GROUND ROD.

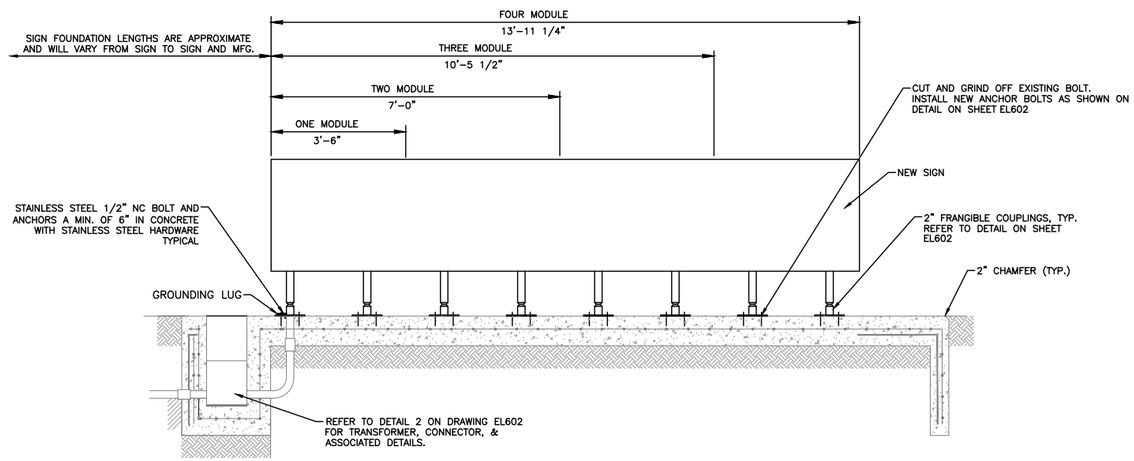

FRONT VIEW

1 NEW GUIDANCE SIGN ON EXISTING SIGN FOUNDATION
NOT TO SCALE

CITY & COUNTY of DENVER

DENVER INTERNATIONAL AIRPORT

LEAN ENGINEERING

RUNWAY 17R-35L COMPLEX PAVEMENT REHABILITATION PACKAGE 1

ISSUE RECORD

NO.	BY	PURPOSE	DATE	CKD
1	LE	50% DESIGN	09/14/18	DL
2	LE	90% DESIGN	10/26/18	DL
3	LE	BID	12/26/18	DL
4	LE	CONSTRUCTION	2/15/19	DL

SCALE: AS INDICATED

DATE: FEBRUARY 15, 2019

DRAWN BY: KV

CHECKED BY: JA

FAA AIP NO:

WORK BREAKDOWN NO.

DESIGN CONTRACT NO. 201735882

CONST. CONTRACT NO. 201846271

VOLUME NO.

SHEET TITLE

SIGNAGE DETAIL 3

SHEET NO. EL603

CADD FILE NO. _201735882-B1EELD-5272

COLORADO LICENSED PROFESSIONAL ENGINEER 52246 2/15/19

D:\dropbox (lean photometrics)\active projects\157180 rah den 17r-35l reconstruction\01 drawings\working drawings\Sheets_201735882-B1EELD-5272.dwg Feb 12, 2019 - 5:22pm Kat

NOTES:

1. SEE SHEETS E-001 FOR GENERAL ELECTRICAL NOTES.

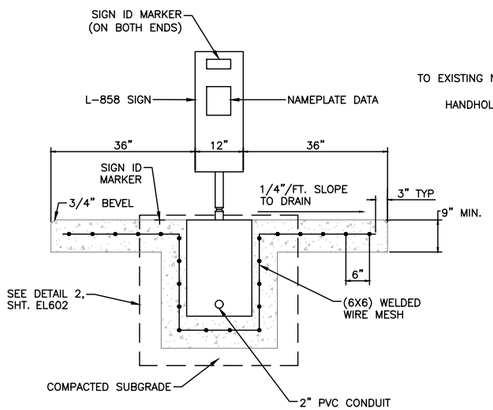

SIDE VIEW

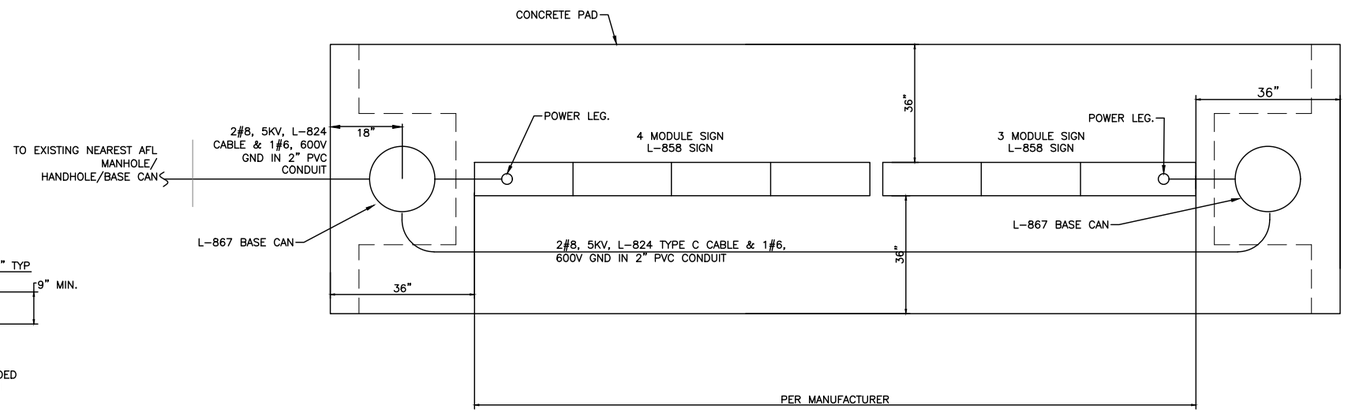

PLAN VIEW

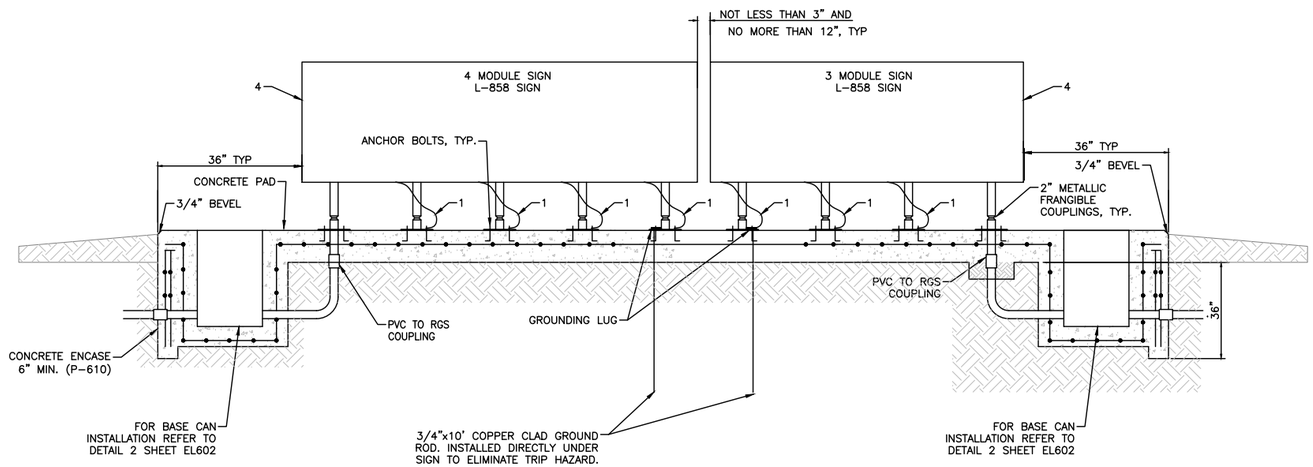

FRONT VIEW

KEY NOTES:

1. TETHER. MINIMUM 1 PER MODULE AND AT LEAST 2 TETHERS PER SIGN.
2. INSTALL NEW SIGNS PER MANUFACTURER MOUNTING PLATE TEMPLATE, RECOMMENDATIONS, AND INSTRUCTIONS. NUMBER AND SPACING OF LEGS AS PER MANUFACTURERS REQUIREMENTS.
3. PROVIDE 2 EACH L-830 ISOLATION TRANSFORMERS: ONE FOR THE 4-MOD SIGN AND ONE FOR THE 3-MOD SIGN TO MATCH EACH TOTAL SIGN VA LOAD PER MANUFACTURER'S RECOMMENDATION. PROVIDE NEW L-823 EXTENSION CORDSETS OF REQUIRED LENGTH.
4. PROVIDE GUIDANCE SIGN IDENTIFICATION MARKER ON EACH END OF THE SIGN (TOTAL OF TWO MARKERS PER SIGN).
5. ASSURE EXISTING FOUNDATION OF SAME SIZE AND DIMENSIONS REQUIRES DEMOLITION AND REMOVAL.

1 / –

NEW LIGHTED GUIDANCE SIGNS LARGER THAN 4 MODULES INSTALLATION DETAILS ON NEW FOUNDATION

NOT TO SCALE

COLORADO LICENSED
AARON LEA
52246
2/15/19
PROFESSIONAL ENGINEER

CITY & COUNTY of DENVER

DENVER INTERNATIONAL AIRPORT

LEAN ENGINEERING

RUNWAY 17R-35L COMPLEX PAVEMENT REHABILITATION PACKAGE 1

ISSUE RECORD

NO.	BY	PURPOSE	DATE	CKD
1	LE	50% DESIGN	09/14/18	DL
2	LE	90% DESIGN	10/26/18	DL
3	LE	BID	12/26/18	DL
4	LE	CONSTRUCTION	2/15/19	DL

SCALE: AS INDICATED

DATE: FEBRUARY 15, 2019

DRAWN BY: KV

CHECKED BY: JA

FAA AIP NO:

WORK BREAKDOWN NO.

DESIGN CONTRACT NO. 201735882

CONST. CONTRACT NO. 201846271

VOLUME NO.

SHEET TITLE: SIGNAGE DETAIL 4

SHEET NO. EL604

CADD FILE NO. _201735882-B1EELD-5272

D:\dropbox (lean photometrics)\active projects\1571801a rwy den 17r-35l reconstruction\01 drawings\working drawings\Sheets_201735882-B1EELD-5272.dwg Feb 12, 2019 - 5:22pm Kat

NOTES:

1. SEE SHEETS E-001 FOR GENERAL ELECTRICAL NOTES.

SHEET NOTES:

1. PRIOR TO DEMOLITION OF EXISTING REMOTE I/O CABINET, CONTRACTOR SHALL SURVEY AND FIELD VERIFY THE EXISTING ROUTING AND WIRING FOR THE AIRFIELD LIGHTING CIRCUITS, INDUCTION LOOPS, AND FIBER CONTROL CABLE. PROVIDE ROUTING AND CONFIRMATION OF EXISTING CIRCUITS IN A SHOP DRAWING TO BE PROVIDED TO THE AIRPORT FOR APPROVAL. PROVIDE A PULLING PLAN FOR THE NEW CABLE AS PART OF THE SHOP DRAWING. CONTRACTOR SHALL NOT DEMOLISH EXISTING REMOTE I/O CABINET UNTIL SHOP DRAWING AND PULLING PAN HAS BEEN APPROVED.
2. DEMOLISH EXISTING FOUNDATION, CONDUITS, AND EQUIPMENT, AND BACKFILL IN KIND. REMOVE ALL CIRCUITS TO NEAREST HANDHOLE AND AS SHOWN ON THE DRAWINGS.

1 / – PHOTO OF RUNWAY 17R/35L RI/O (SOUTH) – REMOVAL
NOT TO SCALE

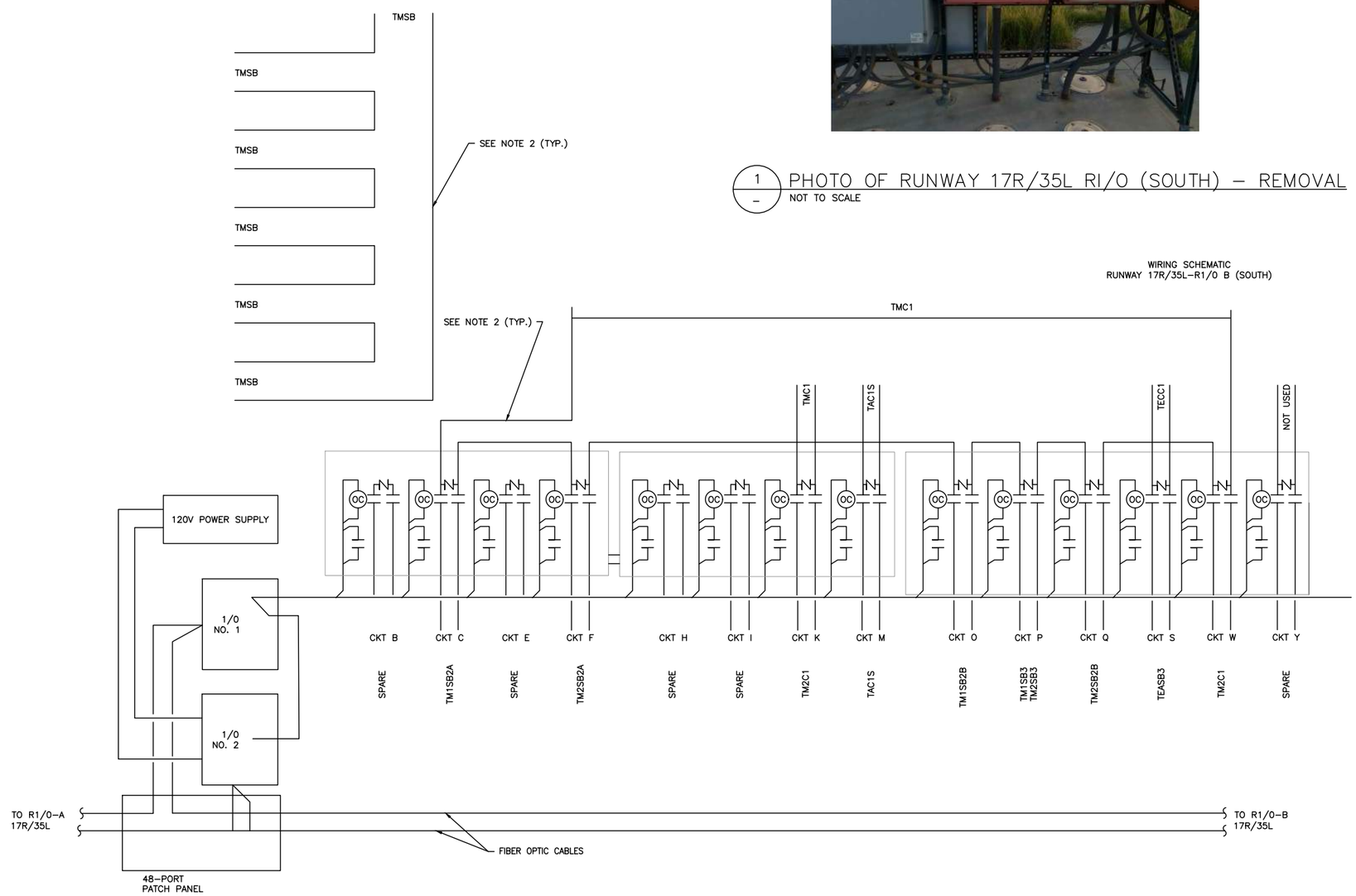

2 / – RI/O SOUTH EXISTING SINGLE LINE – REMOVAL
NOT TO SCALE

CITY & COUNTY of DENVER

DENVER INTERNATIONAL AIRPORT

LEAN ENGINEERING

RUNWAY 17R-35L COMPLEX PAVEMENT REHABILITATION PACKAGE 1

ISSUE RECORD

NO.	BY	PURPOSE	DATE	CKD
1	LE	50% DESIGN	09/14/18	DL
2	LE	90% DESIGN	10/26/18	DL
3	LE	BID	12/26/18	DL
4	LE	CONSTRUCTION	2/15/19	DL

SCALE: AS INDICATED

DATE: FEBRUARY 15, 2019

DRAWN BY: KV

CHECKED BY: JA

FAA AIP NO:

WORK BREAKDOWN NO.

DESIGN CONTRACT NO. 201735882

CONST. CONTRACT NO. 201846271

VOLUME NO.

SHEET TITLE

RI/O SOUTH REMOVAL

SHEET NO. EL701

CADD FILE NO. _201735882-B1EELD-5276

COLORADO LICENSED PROFESSIONAL ENGINEER TORSON LEAN 52246 2/15/19

D:\dropbox (lean photometrics)\active projects\1517180\a rsh den 17-35l reconstruction\01 drawings\working drawings\Sheets_201735882-B1EELD-5276.dwg Feb 12, 2019 - 5:22am Kat

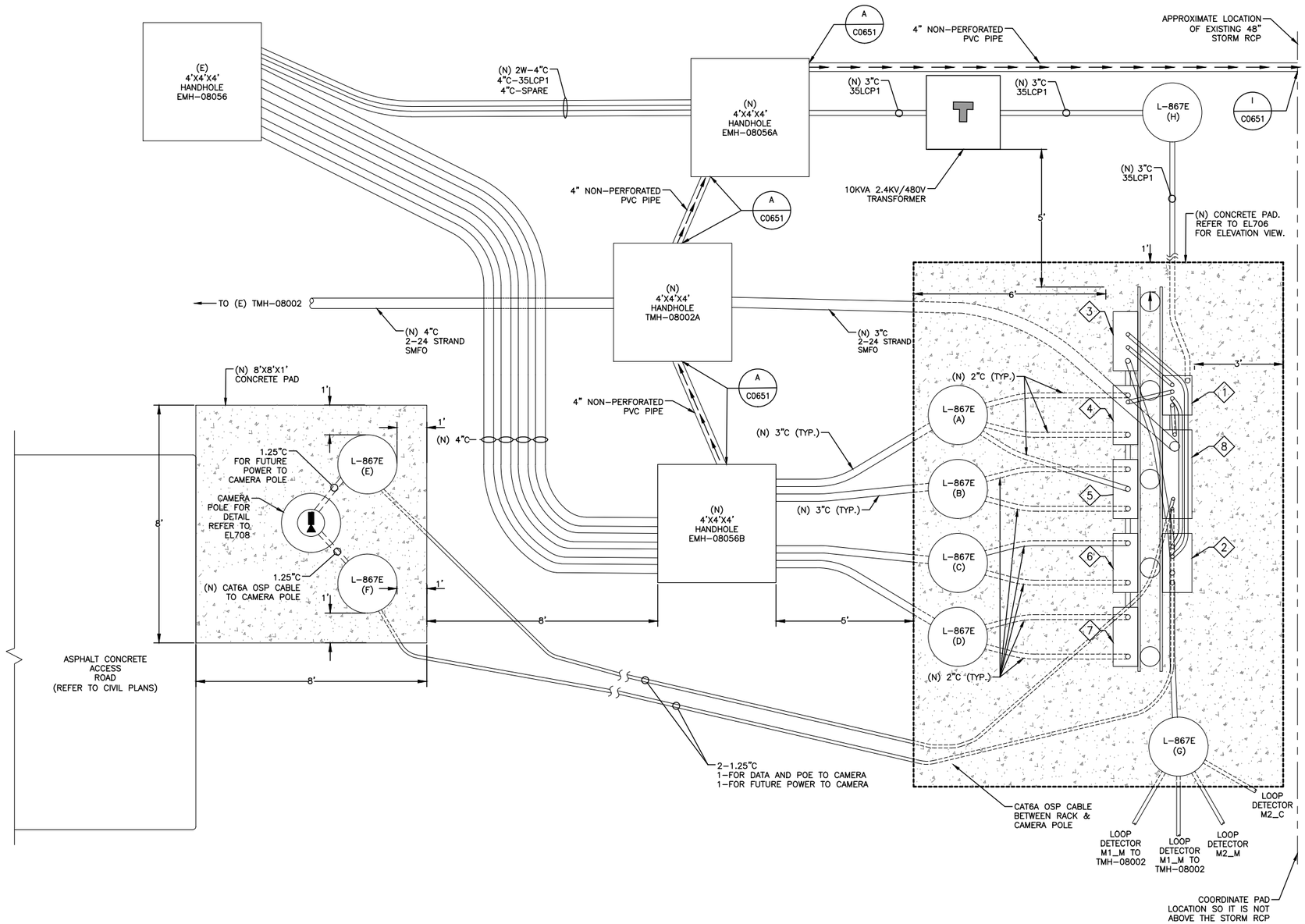

1 / – 17R-35L R I/O SOUTH CABINET – NEW LAYOUT
NOT TO SCALE

NOTES:

1. SEE SHEETS E-001 FOR GENERAL ELECTRICAL NOTES.
2. CONTRACTOR MUST PERFORM UTILITY SURVEY & POT-HOLING OF EXISTING UTILITIES AND PROVIDE CAD DRAWING SHOWING LOCATION OF ANY EXISTING UTILITES AND PROPOSED LOCATION OF (N) EQUIPMENT.

KEY NOTES:

1. MINI POWER ZONE, NEMA 3R, 480-240/120V, 5KVA, 1ϕ SQARED MPZ5S40F (16"x41"x12") OR APPROVED EQUAL.
2. DIGITAL LOOP DETECTOR ENCLOSURE (24"x30"x12").
3. ADVANCED CONTROL EQUIPMENT (ACE) ENCLOSURE (24"x30"x10").
4. CIRCUIT SELECTOR SWITCH #1 (24"x30"x10").
5. CIRCUIT SELECTOR SWITCH #2 (24"x30"x10").
6. CIRCUIT SELECTOR SWITCH #3 (24"x30"x10").
7. CIRCUIT SELECTOR SWITCH #4 (24"x30"x10").
8. IT CABINET ENCLOSURE (36"x48"x12"). REFER TO EL708 FOR IT CABINET DETAILS.

LEGEND:

- L-867E (X) — NEW L-867E BASE CAN (X) DENOTES BASE CAN DESIGNATION.
- NEW CONDUIT
- DRAIN PIPE. ARROW INDICATES DIRECTION OF FLOW.
- NEW 10KVA 2.4KV/480V TRANSFORMER
- (N) 4X4 HANDHOLE EMH-XXXX — NEW 4X4 HANDHOLE
- NEW CCTV CAMERA

COLORADO LICENSED PROFESSIONAL ENGINEER JASON LEAN 52246 2/15/19

CITY & COUNTY of DENVER

DENVER INTERNATIONAL AIRPORT

LEAN ENGINEERING

RUNWAY 17R-35L COMPLEX PAVEMENT REHABILITATION PACKAGE 1

ISSUE RECORD

NO.	BY	PURPOSE	DATE	CKD
1	LE	50% DESIGN	09/14/18	DL
2	LE	90% DESIGN	10/26/18	DL
3	LE	BID	12/26/18	DL
4	LE	CONSTRUCTION	2/15/19	DL

SCALE: AS INDICATED
DATE: FEBRUARY 15, 2019
DRAWN BY: KV
CHECKED BY: JA
FAA AIP NO:
WORK BREAKDOWN NO.
DESIGN CONTRACT NO. 201735882
CONST. CONTRACT NO. 201846271
VOLUME NO.
SHEET TITLE: 17R-35L RI/O SOUTH CABINET NEW LAYOUT
SHEET NO. EL702
280 OF 396
CADD FILE NO. _201735882-B1EELD-5276

D:\dropbox (lean photometrics)\active projects\1571801a rsh den 17-35l reconstruction\01 drawings\working drawings\Sheets_201735882-B1EELD-5276.dwg Feb 12, 2019 - 5:22pm Kat

NOTES:

1. SEE SHEETS E-001 FOR GENERAL ELECTRICAL NOTES.
2. CONTRACTOR MUST PERFORM UTILITY SURVEY & POT-HOLING OF EXISTING UTILITIES AND PROVIDE CAD DRAWING SHOWING LOCATION OF ANY EXISTING UTILITES AND PROPOSED LOCATION OF (N) EQUIPMENT.

KEY NOTES:

1. IT CABINET ENCLOSURE (36"x48"x12"). REFER TO EL708 FOR IT CABINET DETAILS.
2. MINI POWER ZONE, NEMA 3R, 480-240/120V, 5KVA, 1ϕ SQARED MPZ5S40F (16"x41"x12") OR APPROVED EQUAL.
3. ADVANCED CONTROL EQUIPMENT (ACE) ENCLOSURE (24"x30"x10").
4. CIRCUIT SELECTOR SWITCH #1 (24"x30"x10").
5. CIRCUIT SELECTOR SWITCH #2 (24"x30"x10").

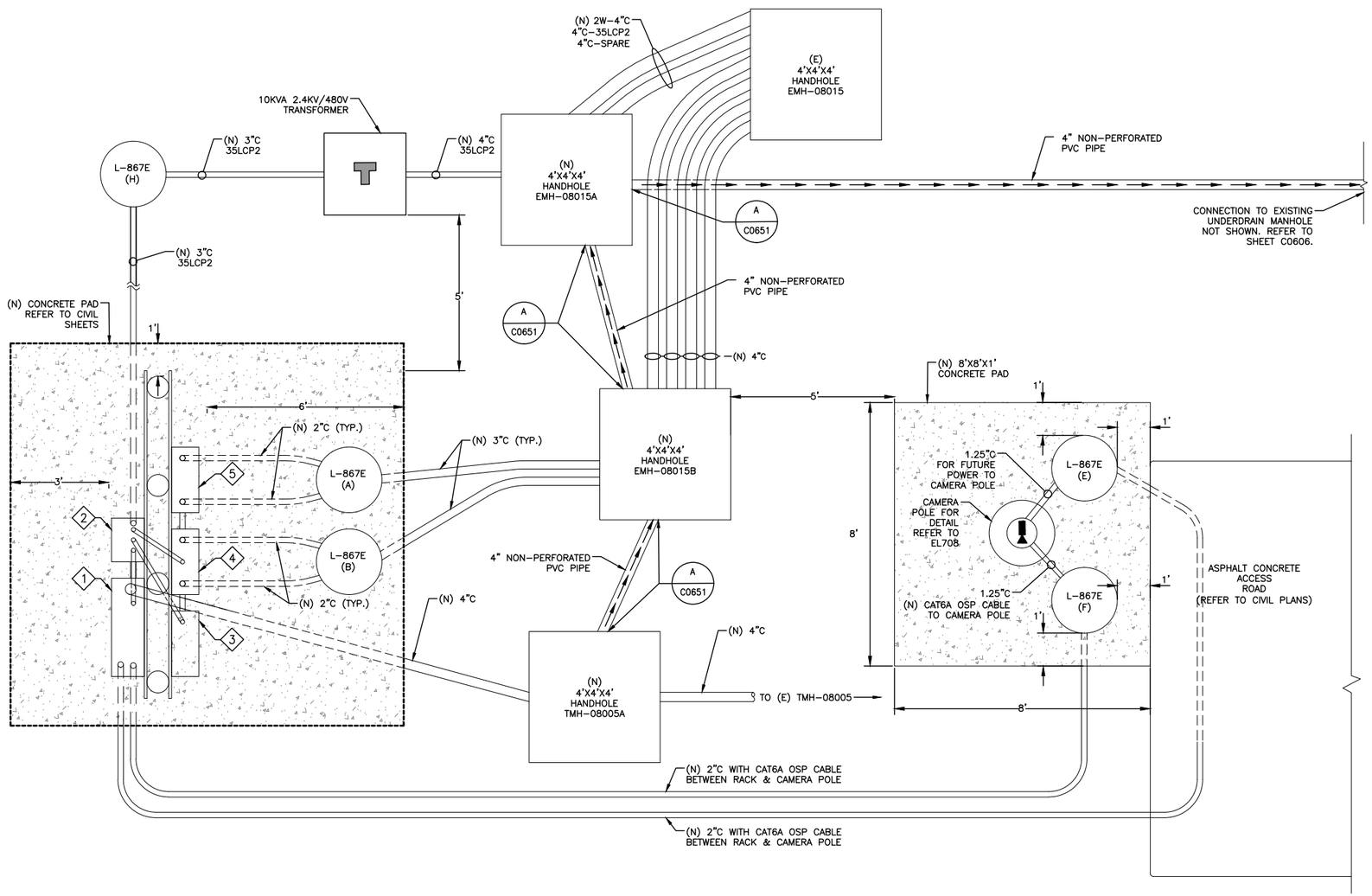

1 — 17R-35L R I/O NORTH CABINET – NEW LAYOUT
NOT TO SCALE

LEGEND:

- L-867E (X) — NEW L-867E BASE CAN (X) DENOTES BASE CAN DESIGNATION.
- NEW CONDUIT
- DRAIN PIPE. ARROW INDICATES DIRECTION OF FLOW.
- NEW 10KVA 2.4KV/480V TRANSFORMER
- (N) 4X4 HANDHOLE EMH-XXXX
- NEW CCTV CAMERA

COLORADO LICENSED DORON LEAN 52246 2/15/19 PROFESSIONAL ENGINEER

CITY & COUNTY of DENVER

DENVER INTERNATIONAL AIRPORT

LEAN ENGINEERING

RUNWAY 17R-35L COMPLEX PAVEMENT REHABILITATION PACKAGE 1

ISSUE RECORD

NO.	BY	PURPOSE	DATE	CKD
1	LE	50% DESIGN	09/14/18	DL
2	LE	90% DESIGN	10/26/18	DL
3	LE	BID	12/26/18	DL
4	LE	CONSTRUCTION	2/15/19	DL

SCALE: AS INDICATED
DATE: FEBRUARY 15, 2019
DRAWN BY: KV
CHECKED BY: JA
FAA AIP NO:
WORK BREAKDOWN NO.
DESIGN CONTRACT NO. 201735882
CONST. CONTRACT NO. 201846271
VOLUME NO.
SHEET TITLE: 17R-35L RI/O NORTH CABINET NEW LAYOUT
SHEET NO. EL703
281 OF 396
CADD FILE NO. _201735882-B1EELD-5276

D:\dropbox (lean photometrics)\active projects\157180\a rah den 17r-35l reconstruction\01 drawings\working drawings\Sheets_201735882-B1EELD-5276.dwg Feb 12, 2019 - 5:22pm Kat

NOTES:

1. SEE SHEETS E-001 FOR GENERAL ELECTRICAL NOTES.

SHEET NOTES:

1. ALL EQUIPMENT SHALL BE NEW.

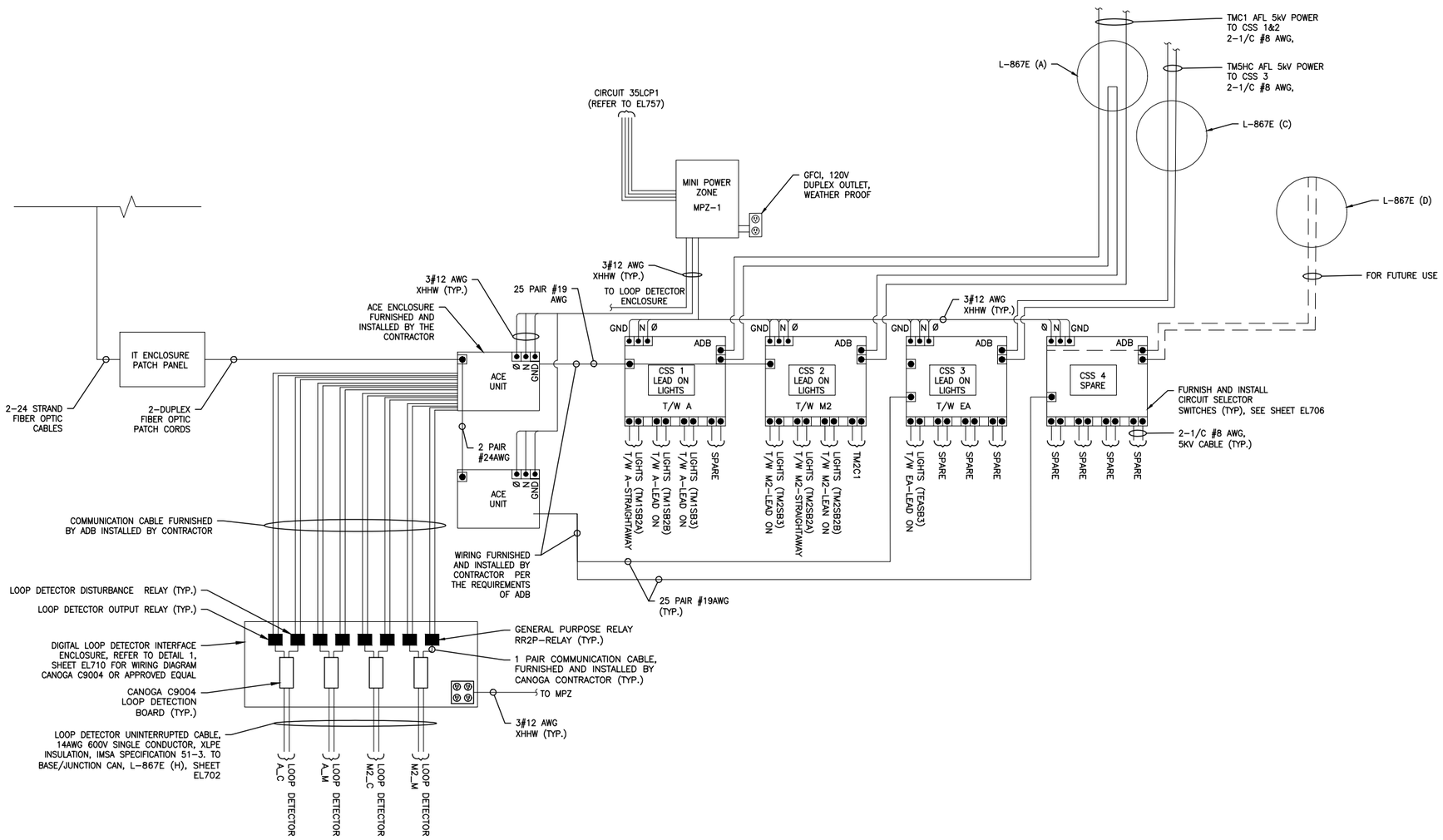

1 RUNWAY 17R-35L SOUTH RI/O – CIRCUIT SELECTOR SWITCH RACK WIRING DIAGRAM

NOT TO SCALE

CITY & COUNTY of DENVER

DENVER INTERNATIONAL AIRPORT

LEAN ENGINEERING

RUNWAY 17R-35L COMPLEX PAVEMENT REHABILITATION PACKAGE 1

ISSUE RECORD

NO.	BY	PURPOSE	DATE	CKD
1	LE	50% DESIGN	09/14/18	DL
2	LE	90% DESIGN	10/26/18	DL
3	LE	BID	12/26/18	DL
4	LE	CONSTRUCTION	2/15/19	DL

SCALE: AS INDICATED

DATE: FEBRUARY 15, 2019

DRAWN BY: KV

CHECKED BY: JA

FAA AIP NO:

WORK BREAKDOWN NO.

DESIGN CONTRACT NO. 201735882

CONST. CONTRACT NO. 201846271

VOLUME NO.

SHEET TITLE: RUNWAY 17R-35L SOUTH RI/O CSS WIRING DIAGRAM

SHEET NO. EL704

CADD FILE NO. _201735882-B1EELD-5276

COLORADO LICENSED PROFESSIONAL ENGINEER DORON LEAN 52246 2/15/19

D:\dropbox (lean photometrics)\active projects\1157180ia rah den 17r-35l reconstruction\01 drawings\working drawings\Sheets_201735882-B1EELD-5276.dwg Feb 12, 2019 - 5:22pm Kat

NOTES:

1. SEE SHEETS E-001 FOR GENERAL ELECTRICAL NOTES.

SHEET NOTES:

1. ALL EQUIPMENT SHALL BE NEW.

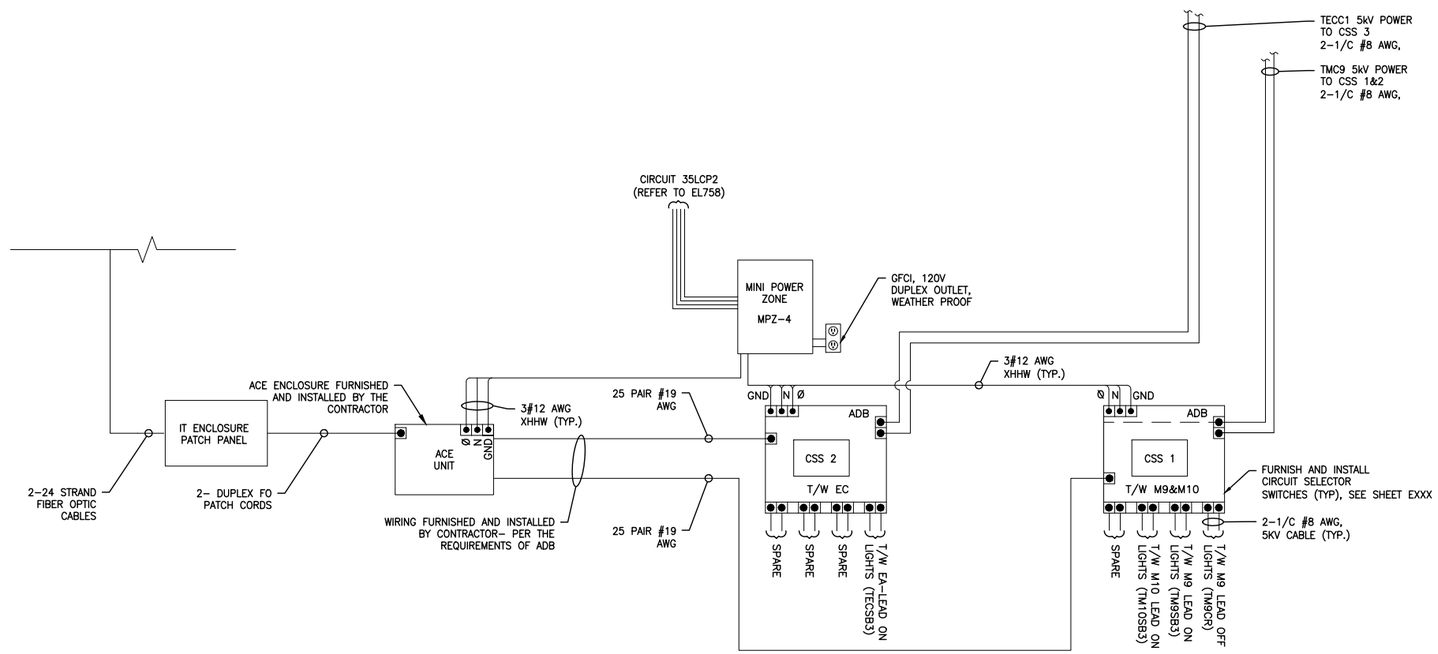

1 RUNWAY 17R-35L NORTH RI/O – CIRCUIT SELECTOR SWITCH RACK WIRING DIAGRAM

NOT TO SCALE

CITY & COUNTY of DENVER

DENVER INTERNATIONAL AIRPORT

LEAN ENGINEERING

RUNWAY 17R-35L COMPLEX PAVEMENT REHABILITATION PACKAGE 1

ISSUE RECORD

NO.	BY	PURPOSE	DATE	CKD
1	LE	50% DESIGN	09/14/18	DL
2	LE	90% DESIGN	10/26/18	DL
3	LE	BID	12/26/18	DL
4	LE	CONSTRUCTION	2/15/19	DL

SCALE: AS INDICATED

DATE: FEBRUARY 15, 2019

DRAWN BY: KV

CHECKED BY: JA

FAA AIP NO:

WORK BREAKDOWN NO.

DESIGN CONTRACT NO. 201735882

CONST. CONTRACT NO. 201846271

VOLUME NO.

SHEET TITLE

RUNWAY 17R-35L NORTH RI/O CSS WIRING DIAGRAM

SHEET NO. EL705

283 OF 396

CADD FILE NO. _201735882-B1EELD-5276

COLORADO LICENSED
AARON LEA
52246
2/15/19
PROFESSIONAL ENGINEER

D:\dropbox (lean photometrics)\active projects\1571801a rah den 17r-35l reconstruction\01 drawings\working drawings\Sheets_201735882-B1EELD-5276.dwg Feb 12, 2019 - 5:23pm Kat

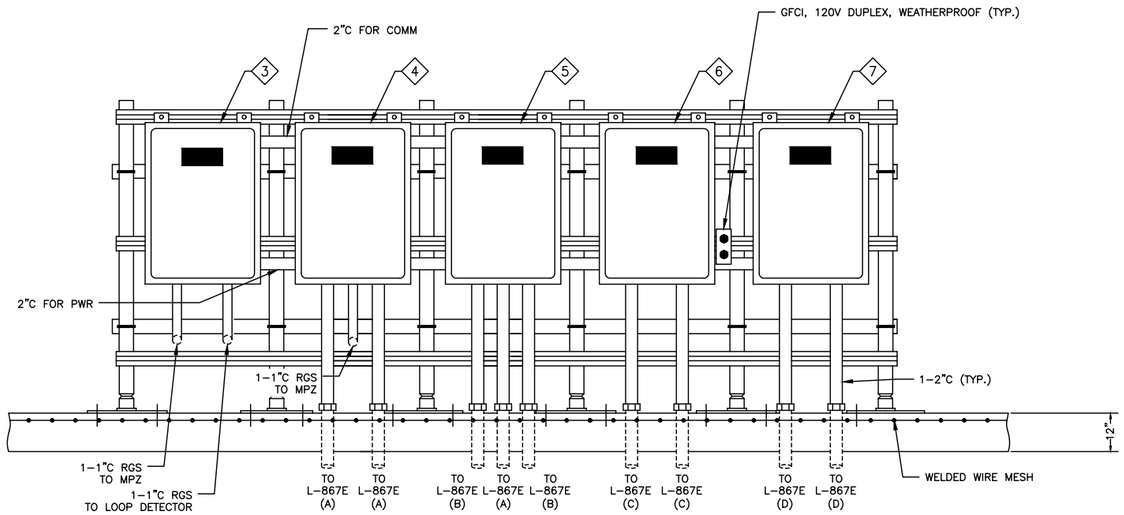

1 / – SOUTH RI/O CABINET – SOUTH FACING ELEVATION – NEW

NOT TO SCALE

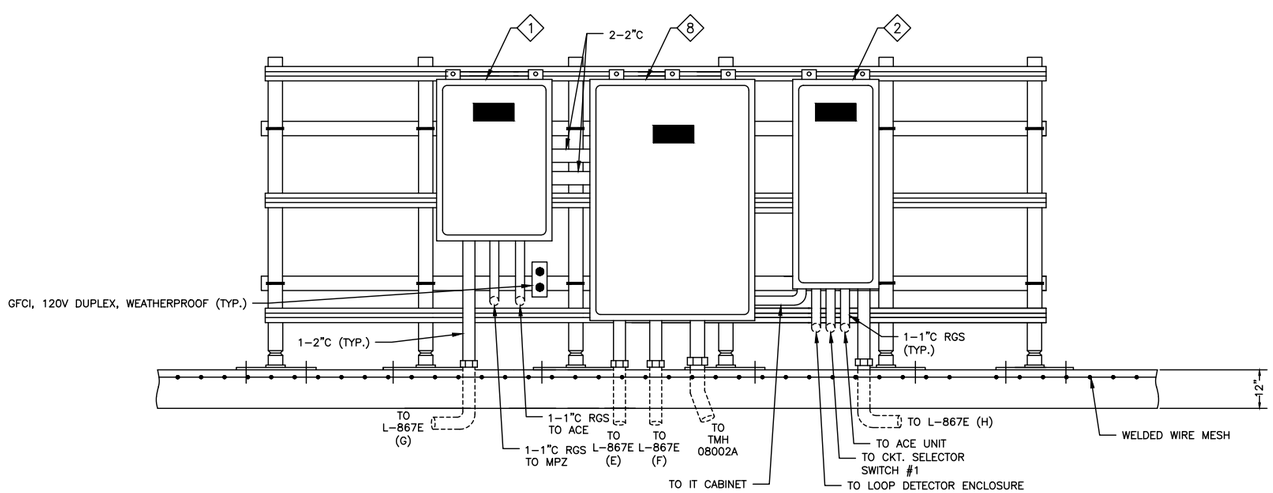

2 / – SOUTH RI/O CABINET – NORTH FACING ELEVATION – NEW

NOT TO SCALE

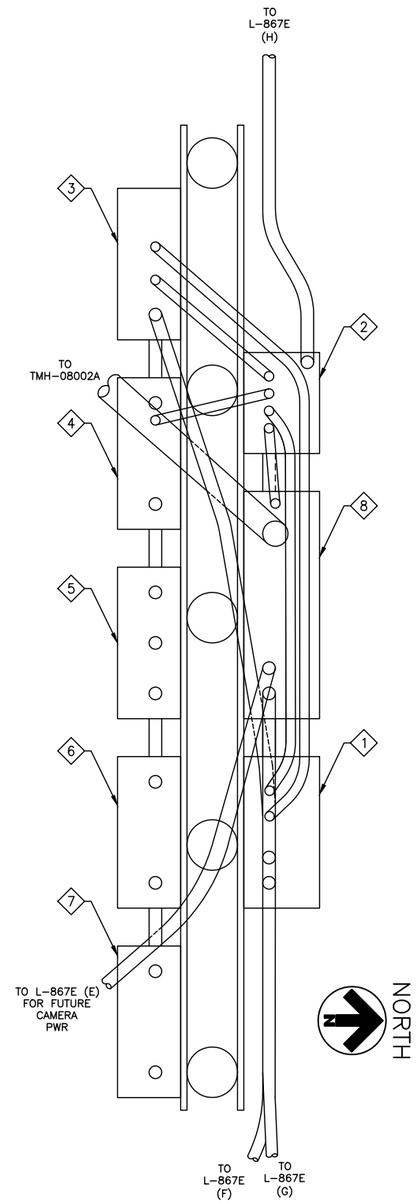

3 / – SOUTH RI/O CABINET – TOP VIEW

NOT TO SCALE

NOTES:

1. SEE SHEETS E-001 FOR GENERAL ELECTRICAL NOTES.

SHEET NOTES:

1. REFER TO EL702 FOR BASE CAN DESIGNATION.

KEY NOTES:

1. DIGITAL LOOP DETECTOR ENCLOSURE (24"x30"x12").
2. MINI POWER ZONE, NEMA 3R, 480-240/120V, 5KVA, 1ϕ SQARED MPZ5S40F (16"x41"x12") OR APPROVED EQUAL.
3. ADVANCED CONTROL EQUIPMENT (ACE) ENCLOSURE (24"x30"x10").
4. CIRCUIT SELECTOR SWITCH #1 (24"x30"x10").
5. CIRCUIT SELECTOR SWITCH #2 (24"x30"x10").
6. CIRCUIT SELECTOR SWITCH #3 (24"x30"x10").
7. CIRCUIT SELECTOR SWITCH #4 (24"x30"x10").
8. IT CABINET ENCLOSURE (36"x48"x12"). REFER TO EL708 FOR IT CABINET DETAILS.

COLORADO LICENSED
DORON LEAN
52246
2/15/19
PROFESSIONAL ENGINEER

CITY & COUNTY of DENVER

DENVER INTERNATIONAL AIRPORT

LEAN ENGINEERING

RUNWAY 17R-35L COMPLEX PAVEMENT REHABILITATION PACKAGE 1

ISSUE RECORD

NO.	BY	PURPOSE	DATE	CKD
1	LE	50% DESIGN	09/14/18	DL
2	LE	90% DESIGN	10/26/18	DL
3	LE	BID	12/26/18	DL
4	LE	CONSTRUCTION	2/15/19	DL

SCALE: AS INDICATED

DATE: FEBRUARY 15, 2019

DRAWN BY: KV

CHECKED BY: JA

FAA AIP NO:

WORK BREAKDOWN NO.

DESIGN CONTRACT NO. 201735882

CONST. CONTRACT NO. 201846271

VOLUME NO.

SHEET TITLE: SOUTH RI/O CABINET ELEVATION

SHEET NO. EL706

CADD FILE NO. _201735882-B1EELD-5276

D:\dropbox (lean photometrics)\active projects\1571801a rah den 17r-35l reconstruction\01 drawings\working drawings\Sheets_201735882-B1EELD-5276.dwg Feb 12, 2019 - 5:23pm Kat

NOTES:

1. SEE SHEETS E-001 FOR GENERAL ELECTRICAL NOTES.

SHEET NOTES:

1. REFER TO EL703 FOR BASE CAN DESIGNATION.

KEY NOTES:

1. IT CABINET ENCLOSURE (36"x48"x12"). REFER TO EL708 FOR IT CABINET DETAILS.
2. MINI POWER ZONE, NEMA 3R, 480-240/120V, 5KVA, 1ϕ SQARED MPZ5S40F (16"x41"x12") OR APPROVED EQUAL.
3. ADVANCED CONTROL EQUIPMENT (ACE) ENCLOSURE (24"x30"x10").
4. CIRCUIT SELECTOR SWITCH #1 (24"x30"x10").
5. CIRCUIT SELECTOR SWITCH #2 (24"x30"x10").

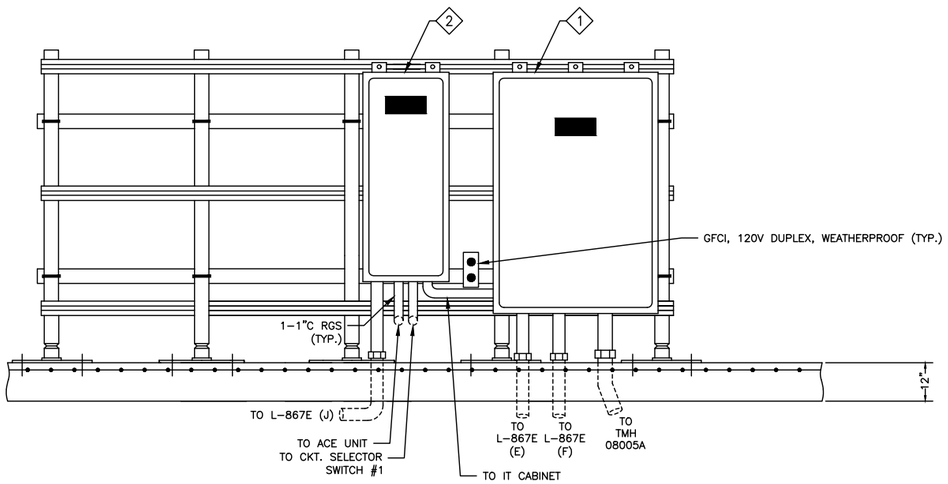

1 NORTH RI/O CABINET – SOUTH FACING ELEVATION – NEW
NOT TO SCALE

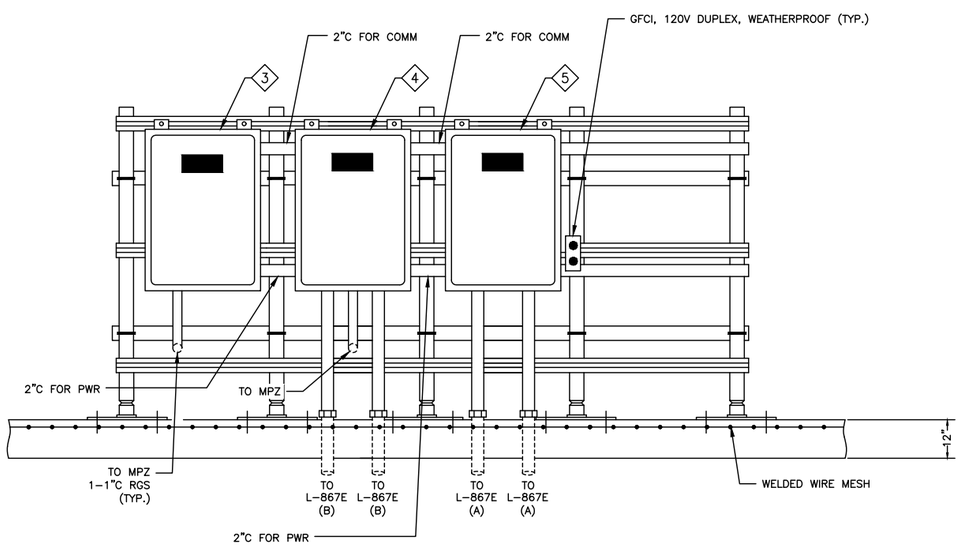

2 NORTH RI/O CABINET – NORTH FACING ELEVATION – NEW
NOT TO SCALE

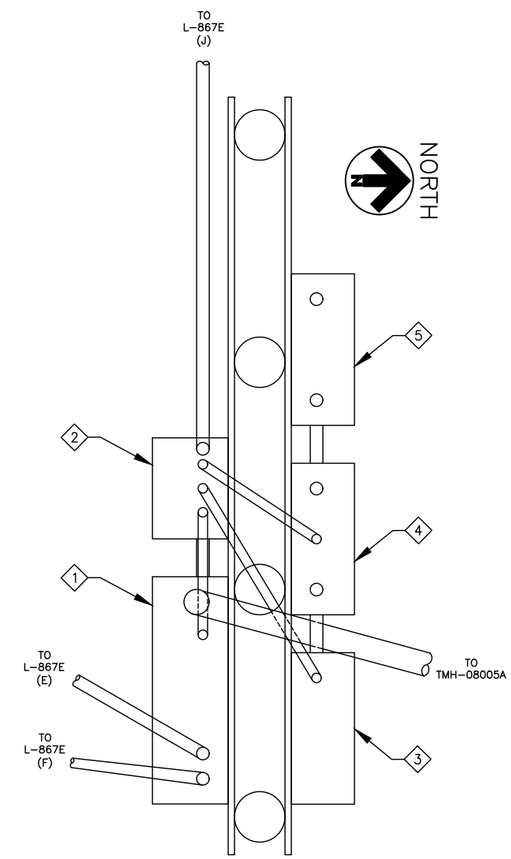

3 NORTH RI/O CABINET – TOP VIEW
NOT TO SCALE

COLORADO LICENSED
BARON LEA
52246
2/15/19
PROFESSIONAL ENGINEER

CITY & COUNTY of DENVER

DENVER INTERNATIONAL AIRPORT

LEAN ENGINEERING

RUNWAY 17R-35L COMPLEX PAVEMENT REHABILITATION PACKAGE 1

ISSUE RECORD

NO.	BY	PURPOSE	DATE	CKD
1	LE	50% DESIGN	09/14/18	DL
2	LE	90% DESIGN	10/26/18	DL
3	LE	BID	12/26/18	DL
4	LE	CONSTRUCTION	2/15/19	DL

SCALE: AS INDICATED

DATE: FEBRUARY 15, 2019

DRAWN BY: KV

CHECKED BY: JA

FAA AIP NO:

WORK BREAKDOWN NO.

DESIGN CONTRACT NO. 201735882

CONST. CONTRACT NO. 201846271

VOLUME NO.

SHEET TITLE: NORTH RI/O CABINET ELEVATION

SHEET NO. EL707

CADD FILE NO. _201735882-B1EELD-5276

D:\dropbox (lean photometrics)\active projects\15718010 rah den 17r-35l reconstruction\01 drawings\working drawings\sheets_201735882-B1EELD-5276.dwg Feb 12, 2019 - 5:23pm Kat

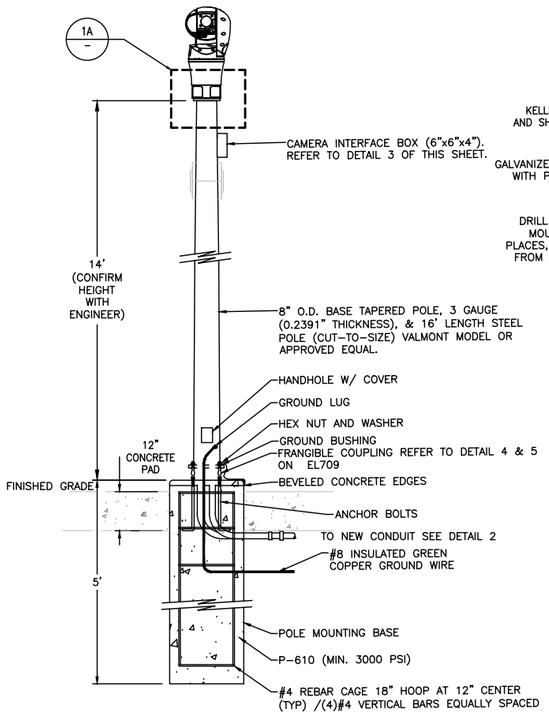

NOTE:
ALL EQUIPMENT AND MATERIAL FOR THIS DETAIL SHALL BE NEW.

1 / – CCTV POLE DETAILS (CCTV#1 AND CCTV#2)
NOT TO SCALE

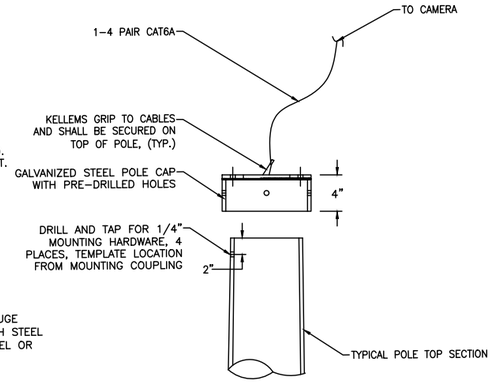

NOTE:
ALL EQUIPMENT AND MATERIAL FOR THIS DETAIL SHALL BE NEW.

1A / – CCTV POLE CONNECTION
NOT TO SCALE

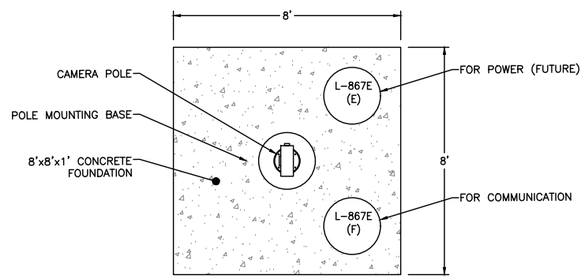

1B / – CCTV POLE TOP VIEW
NOT TO SCALE

NOTES:

1. SEE SHEETS E-001 FOR GENERAL ELECTRICAL NOTES.

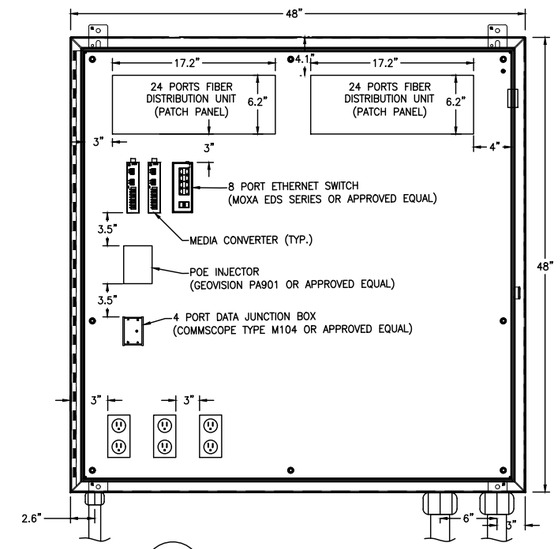

2 / – ITT ENCLOSURE
NOT TO SCALE

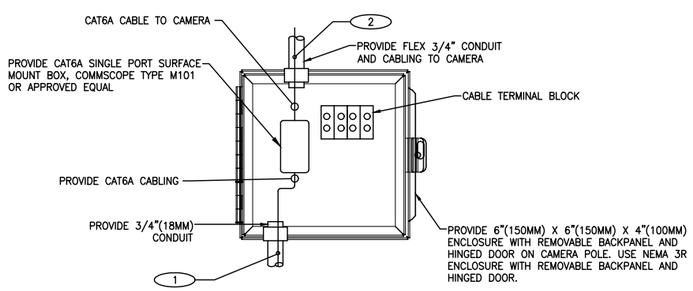

3 / – CAMERA INTERFACE DATA BOX 1 PORT
NOT TO SCALE

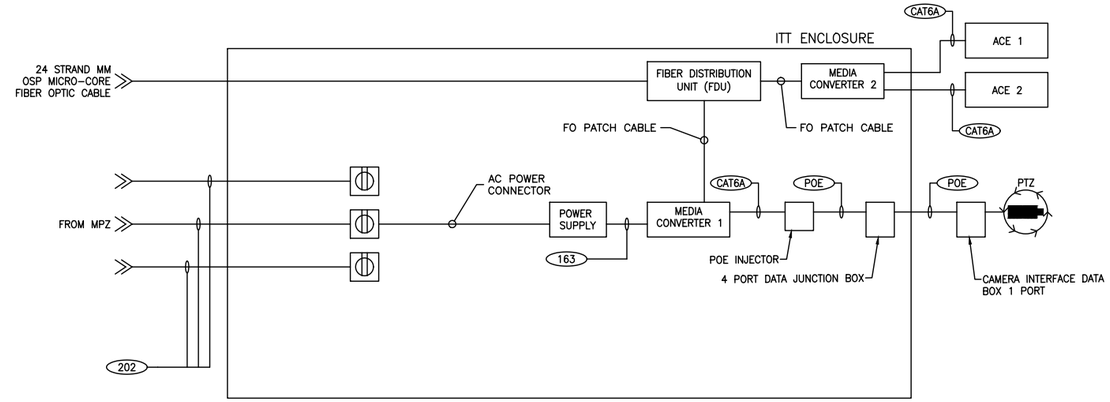

4 / – TYPICAL WIRING DIAGRAM FOR ITT ENCLOSURE & CCTV
NOT TO SCALE

CONDUIT TAG	VOLTAGE	CABLE QTY.	CONDUCTORS PER WIRE	GROUND PER CONDUIT	EQUIPMENT	RECOMMENDATION
1	44-57VDC	1	4 PAIR #23 AWG	1#18 AWG	NETWORK DEVICE	COMMSCOPE SYSTIMAX GIGASPEED X10D 1091 NON-PLENUM U/UTP, OR APPROVED EQUAL
2	44-57VDC	1	4 PAIR #23 AWG	1#18 AWG	NETWORK DEVICE	COMMSCOPE SYSTIMAX GIGASPEED X10D 360BS10E, OR APPROVED EQUAL

3A / – CAMERA INTERFACE BOX AND CABLE SCHEDULE
NOT TO SCALE

CONDUIT TAG	VOLTAGE (AC)	CONDUIT QTY.	CONDUIT	WIRING PER CONDUIT	GROUND PER CONDUIT	EQUIPMENT
163	12VDC	N/A	N/A	2#16 AWG**	1#16 AWG**	CONVERTER/MODULE
202	120V	1*	2"*	2#18 AWG	1#18 AWG	RECEPTACLE
CAT6	–	1	1"	(2 EACH) OUTDOOR RATED CAT 6A CABLE***	–	DATA FOR CCTV
POE	24V	1	1"	(2 EACH) OUTDOOR RATED CAT 6A POWER OVER ETHERNET***	–	DATA FOR CCTV

*CONDUIT IS SHARED BY OTHER CIRCUITS

4A / – ITT ENCLOSURE CONDUIT AND WIRING SCHEDULE
NOT TO SCALE

COLORADO LICENSED
DORON LEA
52246
2/15/19
PROFESSIONAL ENGINEER

CITY & COUNTY of DENVER
DENVER INTERNATIONAL AIRPORT

LEAN ENGINEERING

RUNWAY 17R-35L COMPLEX PAVEMENT REHABILITATION PACKAGE 1

ISSUE RECORD

NO.	BY	PURPOSE	DATE	CKD
1	LE	50% DESIGN	09/14/18	DL
2	LE	90% DESIGN	10/26/18	DL
3	LE	BID	12/26/18	DL
4	LE	CONSTRUCTION	2/15/19	DL

SCALE: AS INDICATED
DATE: FEBRUARY 15, 2019
DRAWN BY: KV
CHECKED BY: JA
FAA AIP NO:
WORK BREAKDOWN NO.
DESIGN CONTRACT NO. 201735882
CONST. CONTRACT NO. 201846271
VOLUME NO.
SHEET TITLE: CCTV POLE & ENCLOSURE DETAILS
SHEET NO. EL708
286 OF 396
CADD FILE NO. _201735882-B1EELD-5276

D:\dropbox (lean photometrics)\active projects\1517180ia rah den 17r-35l reconstruction\01 drawings\working drawings\Sheets_201735882-B1EELD-5276.dwg Feb 12, 2019 - 5:23pm Kat

NOTES:

1. SEE SHEETS E-001 FOR GENERAL ELECTRICAL NOTES.

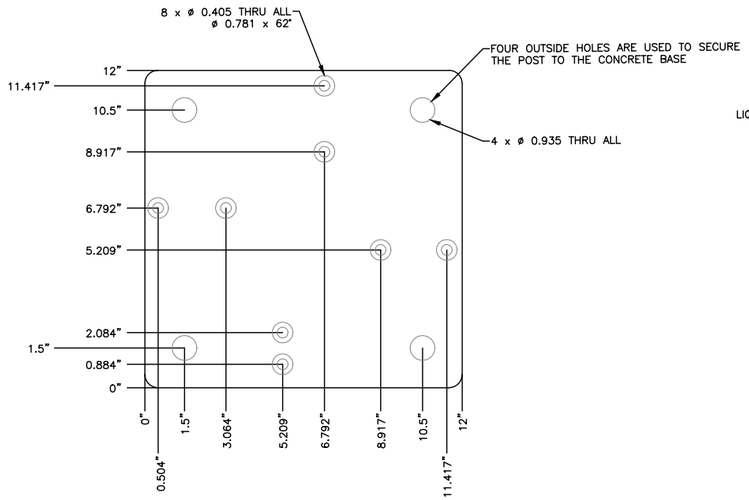

1 MOUNTING PLATE
NOT TO SCALE

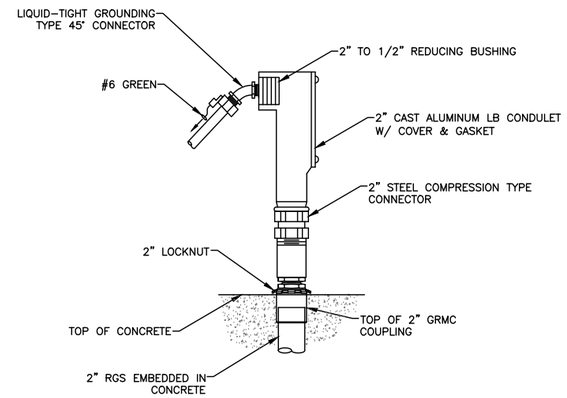

3 LB – WIRING LEG DETAIL
NOT TO SCALE

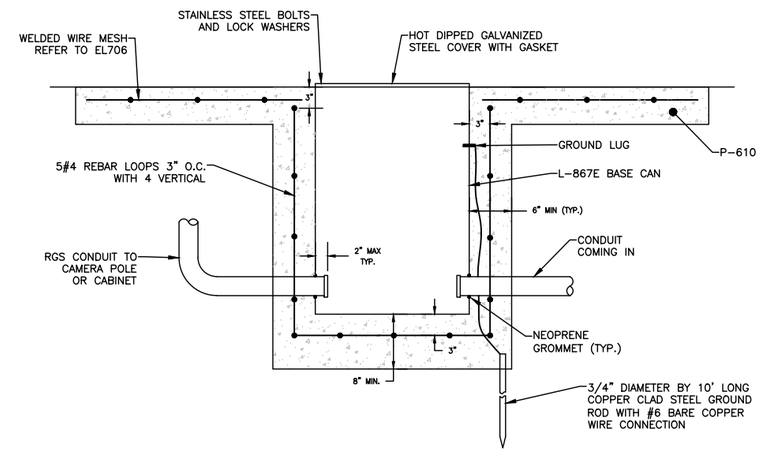

6 L-867E BASE CAN FOR REMOTE I/O CABINET & CCTV POLE
NOT TO SCALE

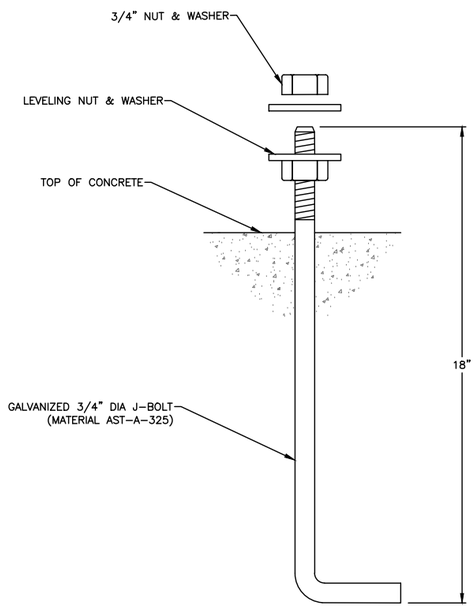

2 "L" SHAPE ANCHOR BOLT
NOT TO SCALE

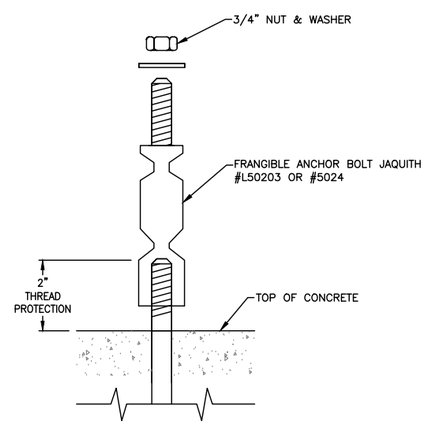

4 FRANGIBLE ANCHOR FUSE BOLT
NOT TO SCALE

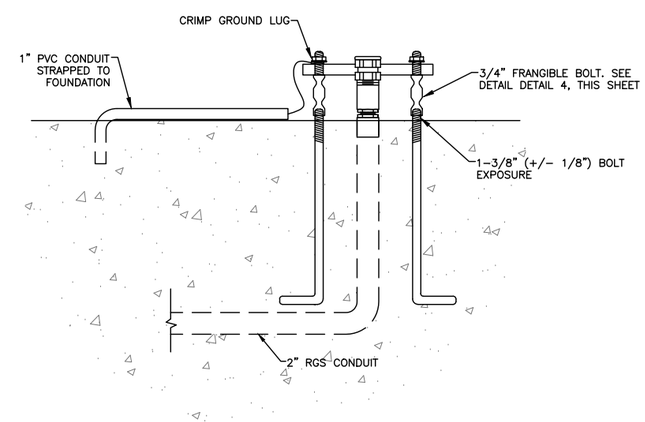

5 MOUNTING PLATE
NOT TO SCALE

COLORADO LICENSED
DORON LEAN
52246
2/15/19
PROFESSIONAL ENGINEER

CITY & COUNTY of DENVER

DENVER INTERNATIONAL AIRPORT

LEAN ENGINEERING

RUNWAY 17R-35L COMPLEX PAVEMENT REHABILITATION PACKAGE 1

ISSUE RECORD

NO.	BY	PURPOSE	DATE	CKD
1	LE	50% DESIGN	09/14/18	DL
2	LE	90% DESIGN	10/26/18	DL
3	LE	BID	12/26/18	DL
4	LE	ADDENDUM 2	1/17/19	DL
5	LE	CONSTRUCTION	2/15/19	DL

SCALE: AS INDICATED

DATE: FEBRUARY 15, 2019

DRAWN BY: KV

CHECKED BY: JA

FAA AIP NO:

WORK BREAKDOWN NO.

DESIGN CONTRACT NO. 201735882

CONST. CONTRACT NO. 201846271

VOLUME NO.

SHEET TITLE: MOUNTING PLATE & FRANGIBLE BOLT DETAILS

SHEET NO. EL709

CADD FILE NO. _201735882-B1EELD-5276

D:\dropbox (lean photometrics)\active projects\1157180ia rah den 17r-35l reconstruction\01 drawings\working drawings\Sheets_201735882-B1EELD-5276.dwg Feb 12, 2019 - 5:23pm Kat

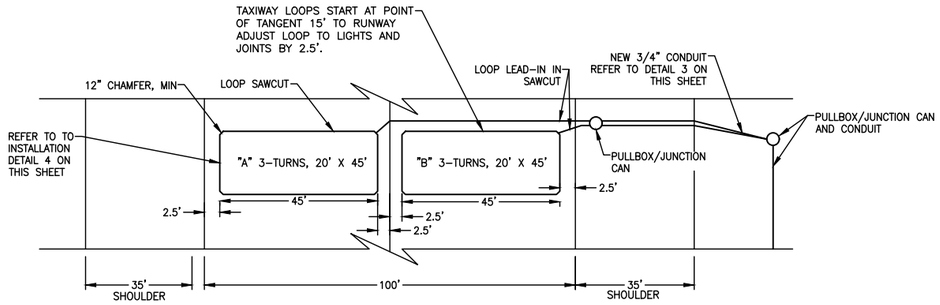

1 TAXIWAY AIRCRAFT DETECTION LOOP DETAIL
NOT TO SCALE

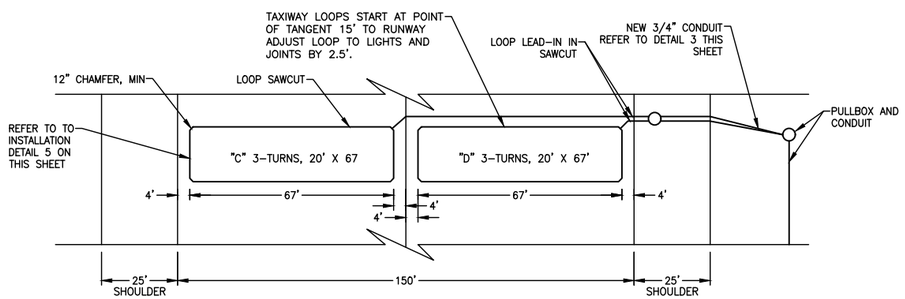

2 RUNWAY AIRCRAFT DETECTION LOOP DETAIL
NOT TO SCALE

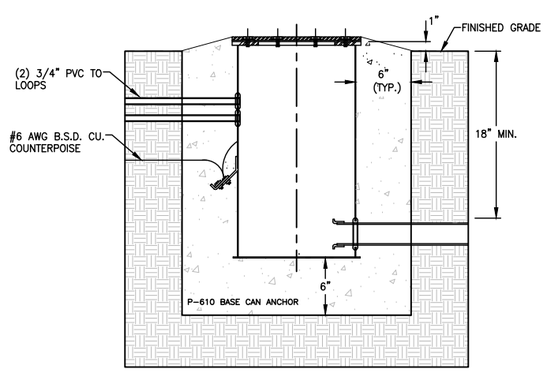

6 L-867D JUNCTION BOX IN TURF
NOT TO SCALE

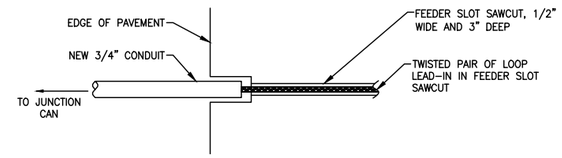

3 LEAD-IN CABLE TRANSITION INSTALLATION
NOT TO SCALE

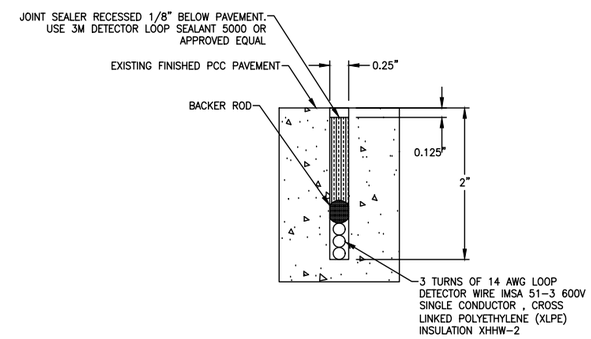

4 LOOP DETECTORS IN SAW KERF IN EXISTING PCC
NOT TO SCALE

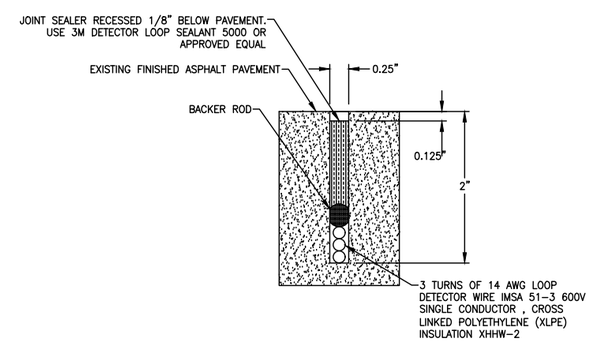

5 LOOP DETECTORS IN SAW KERF IN EXISTING PCC
NOT TO SCALE

NOTES:

1. SEE SHEETS E-001 FOR GENERAL ELECTRICAL NOTES.

SHEET NOTES:

1. ALL LOOP SAWCUTS SHALL BE A MINIMUM 1/4" WIDE BY 2" DEEP TO ACCOMMODATE 3-TURNS OF 14 AWG LOOP WIRE CONDUCTOR.
2. ALL LOOP FEEDER SLOT SAWCUTS SHALL BE 1/2" WIDE BY 3.0" DEEP FROM PULLBOX TO LOOP DETECTOR ACCOMMODATE TWISTED LEADING WIRES.
3. LOOP WIRE SHALL BE TWISTED OUTSIDE OF THE FEEDER SLOT 6 TWISTS PER ONE FOOT FROM LOPP DETECTOR TO PULLBOX BEFORE PLACING TWISTED CABLE INTO FEEDER SAWCUT.
4. LEAD-IN CROSSING CONCRETE TO ASPHALT JOINT SHOULD HAVE EXTRA PROTECTION (WIDTH/DEPTH FOR SEALANT TUBING. LOOP SEALANT SHALL BE DOW 888 AS CURRENTLY USED TO SEAL EXPANSION/CONTRACTION JOINTS.
5. ADJACENT LOOPS SHALL BE SPLICED TO DIAGONALLY OPPOSITE (BLK-WHT, RED-GREEN) PAIRS OF HOMERUN CABLE. ALL SPLICES SHALL BE SOLDERED, INSULATED AND WATERPROOFED USING SPLICE KITS 3M SCOTCHCAST 3832 OR APPROVED EQUAL IN THE HANDHOLES.
6. A 1/4" DIAMETER, 4-CONDUCTOR, CANOGA 30003 LOOP HOMERUN CABLE, SHALL BE INSTALLED FROM EACH HANDHOLE NEAREST THE NEW LOOPS, INTO EXISTING CONDUITS TO THE R-I/O CONTROL CABINET.
7. CONNECTIONS BETWEEN LOOP DETECTOR CABLE AND HOMERUN CABLE IN A PULLBOX SHOULD BE SOLDERED, INSULATED AND WATERPROOFED. USE 3M SCOTCHCAST 3832 BURIED SERVICE WIRE INSTALLATION KIT

COLORADO LICENSED
DORON LEA
52276
2/15/19
PROFESSIONAL ENGINEER

CITY & COUNTY of DENVER

DENVER INTERNATIONAL AIRPORT

LEAN ENGINEERING

RUNWAY 17R-35L COMPLEX PAVEMENT REHABILITATION PACKAGE 1

ISSUE RECORD

NO.	BY	PURPOSE	DATE	CKD
1	LE	50% DESIGN	09/14/18	DL
2	LE	90% DESIGN	10/26/18	DL
3	LE	BID	12/26/18	DL
4	LE	CONSTRUCTION	2/15/19	DL

SCALE: AS INDICATED
DATE: FEBRUARY 15, 2019
DRAWN BY: KV
CHECKED BY: JA
FAA AIP NO:
WORK BREAKDOWN NO.
DESIGN CONTRACT NO. 201735882
CONST. CONTRACT NO. 201846271
VOLUME NO.
SHEET TITLE: AIRCRAFT DETECTION LOOP DETAIL
SHEET NO. EL710

CADD FILE NO. _201735882-B1EELD-5276

D:\dropbox (lean photometrics)\active projects\11571801a rah den 17r-35l reconstruction\01 drawings\working drawings\Sheets_201735882-B1EELD-5276.dwg Feb 12, 2019 - 5:23pm Kat

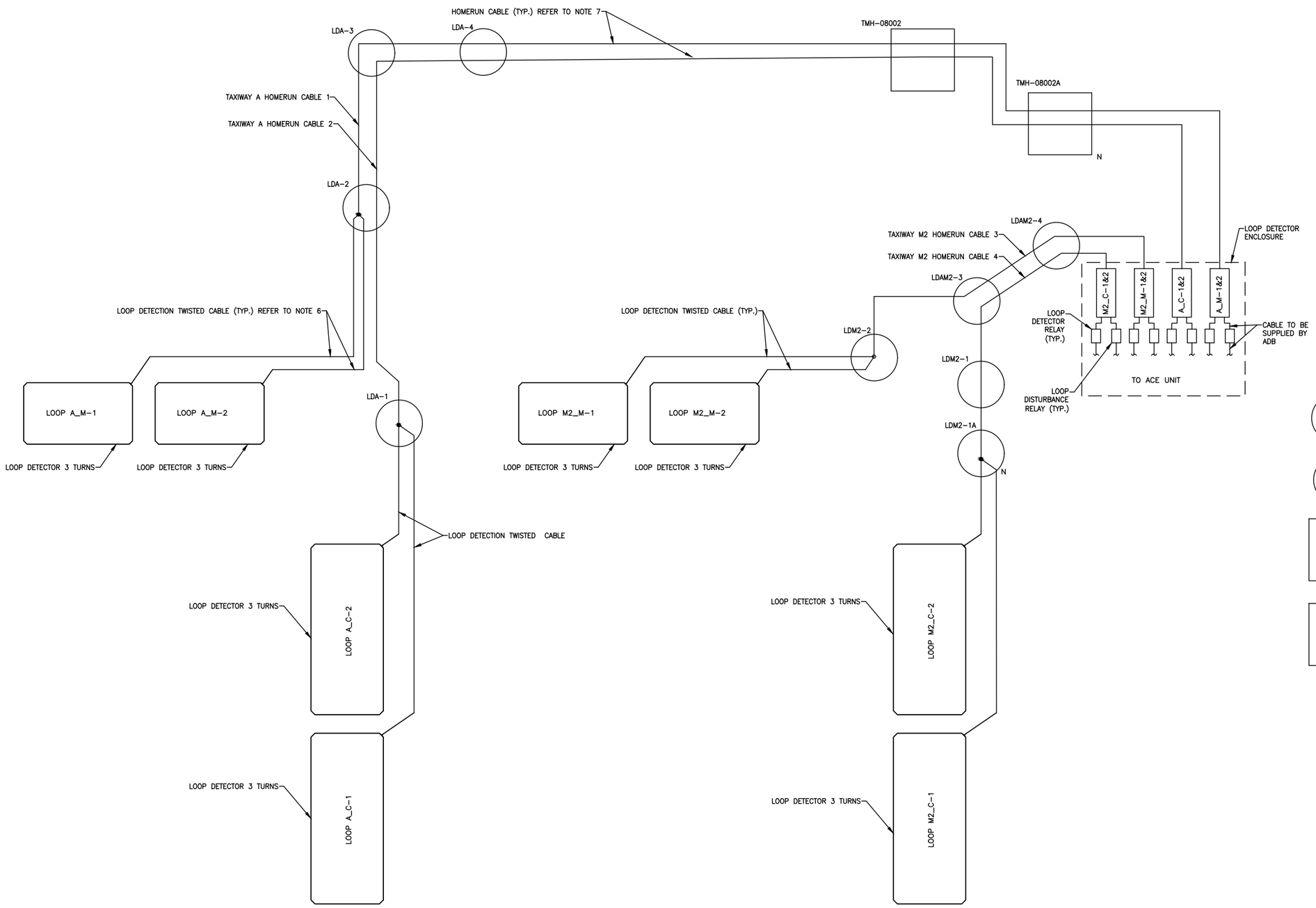

1 AIRCRAFT DETECTION LOOP DIAGRAM
NOT TO SCALE

NOTES:

1. SEE SHEETS E-001 FOR GENERAL ELECTRICAL NOTES.

SHEET NOTES:

1. ALL LOOP SAWCUTS SHALL BE A MINIMUM 1/4" WIDE BY 2" DEEP TO ACCOMMODATE 3-TURNS OF 14 AWG LOOP WIRE CONDUCTOR.
2. ALL LOOP FEEDER SLOT SAWCUTS SHALL BE 1/2" WIDE BY 3.0" DEEP FROM PULLBOX TO LOOP DETECTOR ACCOMMODATE TWISTED LEADING WIRES.
3. LOOP WIRE SHALL BE TWISTED OUTSIDE OF THE FEEDER SLOT 6 TWISTS PER ONE FOOT FROM LOOP DETECTOR TO PULLBOX BEFORE PLACING TWISTED CABLE INTO FEEDER SAWCUT.
4. LOOP SAWCUT CROSSING CONCRETE TO ASPHALT JOINT SHOULD HAVE EXTRA PROTECTION (WIDTH/DEPTH FOR SEALANT TUBING. LOOP SEALANT SHALL BE DOW 888 AS CURRENTLY USED TO SEAL EXPANSION/CONTRACTION JOINTS.
5. ADJACENT LOOPS SHALL BE SPLICED TO DIAGONALLY OPPOSITE (BLK-WHT, RED-GREEN) PAIRS OF HOMERUN CABLE. ALL SPLICES SHALL BE SOLDERED, INSULATED AND WATERPROOFED USING SPLICE KITS 3M SCOTCHCAST 3832 OR APPROVED EQUAL IN THE BASECANS.
6. LOOP DETECTOR CABLE 14AWG 600V SINGLE CONDUCTOR, XLPE INSULATION, IMSA SPECIFICATION 51-3
7. 4-CONDUCTOR, CANOGA 30003 LOOP HOMERUN CABLE, SHALL BE INSTALLED FROM LOOPS TO THE R-I/O CONTROL CABINET.

LDAM2-3 — EXISTING COMMUNICATION JUNCTION CAN

LDM2-1A N — NEW COMMUNICATION JUNCTION CAN

TMH-08002 — EXISTING COMMUNICATION MANHOLE

TMH-08002A N — NEW COMMUNICATION MANHOLE

CANOGA 9004, 4-CHANNELLOOP DETECTOR BOARD

GENERAL PURPOSE RELAY

COLORADO LICENSED
DORON LEAN
52276
2/15/19
PROFESSIONAL ENGINEER

CITY & COUNTY of DENVER

DENVER INTERNATIONAL AIRPORT

LEAN ENGINEERING

RUNWAY 17R-35L COMPLEX PAVEMENT REHABILITATION PACKAGE 1

ISSUE RECORD

NO.	BY	PURPOSE	DATE	CKD
1	LE	50% DESIGN	09/14/18	DL
2	LE	90% DESIGN	10/26/18	DL
3	LE	BID	12/26/18	DL
4	LE	CONSTRUCTION	2/15/19	DL

SCALE: AS INDICATED

DATE: FEBRUARY 15, 2019

DRAWN BY: KV

CHECKED BY: JA

FAA AIP NO:

WORK BREAKDOWN NO.

DESIGN CONTRACT NO. 201735882

CONST. CONTRACT NO. 201846271

VOLUME NO.

SHEET TITLE: LOOP DETECTOR SINGLE LINE DIAGRAM

SHEET NO. EL711

CADD FILE NO. _201735882-B1EELD-5276

D:\dropbox (lean photometrics)\active projects\1157180ia rwy den 17r-35l reconstruction\01 drawings\working drawings\Sheets_201735882-B1EELD-5276.dwg Feb 12, 2019 - 5:23pm Kat

NOTES:

1. SEE SHEETS E-001 FOR GENERAL ELECTRICAL NOTES.

SHEET NOTES:

1. PRIOR TO DEMOLITION OF EXISTING REMOTE I/O CABINET, CONTRACTOR SHALL SURVEY AND FIELD VERIFY THE EXISTING ROUTING AND WIRING FOR THE AIRFIELD LIGHTING CIRCUITS, INDUCTION LOOPS, AND FIBER CONTROL CABLE. PROVIDE ROUTING AND CONFIRMATION OF EXISTING CIRCUITS IN A SHOP DRAWING TO BE PROVIDED TO THE AIRPORT FOR APPROVAL. PROVIDE A PULLING PLAN FOR THE NEW CABLE AS PART OF THE SHOP DRAWING. CONTRACTOR SHALL NOT DEMOLISH EXISTING REMOTE I/O CABINET UNTIL SHOP DRAWING AND PULLING PAN HAS BEEN APPROVED.
2. DEMOLISH EXISTING FOUNDATION, CONDUITS, AND EQUIPMENT, AND BACKFILL IN KIND. REMOVE ALL CIRCUITS TO NEAREST HANDHOLE AND AS SHOWN ON THE DRAWINGS.

1 / – PHOTO OF RUNWAY 17R/35L RI/O (NORTH) – REMOVAL
NOT TO SCALE

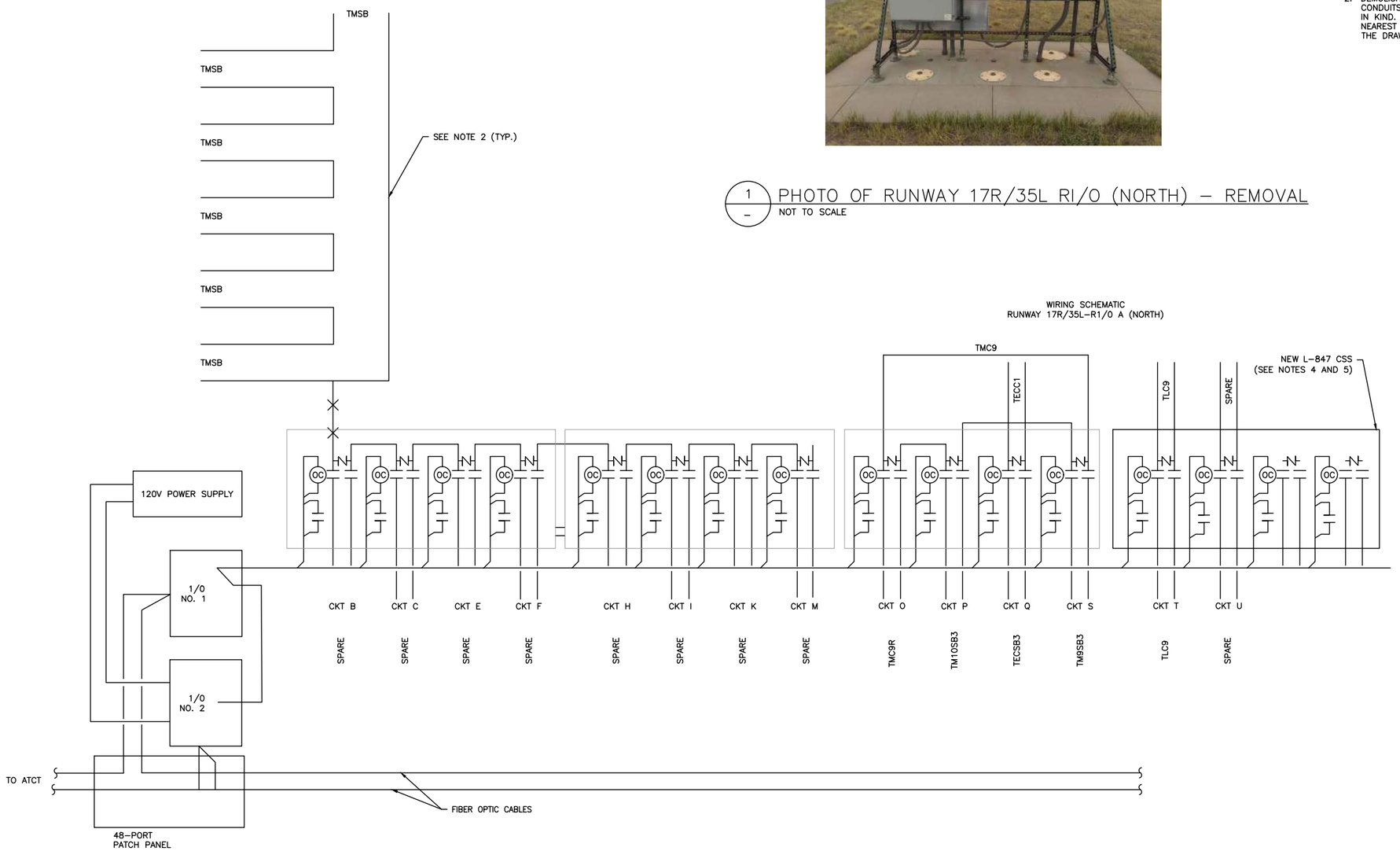

2 / – ONE LINE DIAGRAM – NORTH
NOT TO SCALE

COLORADO LICENSED
DIXON LEAN
52246
2/15/19
PROFESSIONAL ENGINEER

CITY & COUNTY of DENVER

DENVER INTERNATIONAL AIRPORT

LEAN ENGINEERING

RUNWAY 17R-35L COMPLEX PAVEMENT REHABILITATION PACKAGE 1

ISSUE RECORD

NO.	BY	PURPOSE	DATE	CKD
1	LE	50% DESIGN	09/14/18	DL
2	LE	90% DESIGN	10/26/18	DL
3	LE	BID	12/26/18	DL
4	LE	CONSTRUCTION	2/15/19	DL

SCALE: AS INDICATED

DATE: FEBRUARY 15, 2019

DRAWN BY: KV

CHECKED BY: JA

FAA AIP NO:

WORK BREAKDOWN NO.

DESIGN CONTRACT NO. 201735882

CONST. CONTRACT NO. 201846271

VOLUME NO.

SHEET TITLE

RI/O NORTH REMOVAL

SHEET NO. EL712

CADD FILE NO. _201735882-B1EELD-5276

D:\dropbox (lean photometrics)\active projects\1571801a rsh den 17r-35l reconstruction\01 drawings\working drawings\Sheets_201735882-B1EELD-5276.dwg Feb 12, 2019 - 5:23pm Kat

NOTES:

1. SEE SHEETS E-001 FOR GENERAL ELECTRICAL NOTES.

NOTE:

1. CONTROL SYSTEM WAS CHANGED TO AN ADB SYSTEM. CONTRACTOR AS-BUILT DRAWINGS WERE NOT PROVIDED. REFER TO ADB AS-BUILT DRAWINGS AND O&M MANUALS.

1 PATCH PANEL – RUNWAYS 7/25, 8/26, 16L/34R, 17L/35R AND 17R/34L
NOT TO SCALE

2 LOOP DETECTOR ENCLOSURE, TYP.
NOT TO SCALE

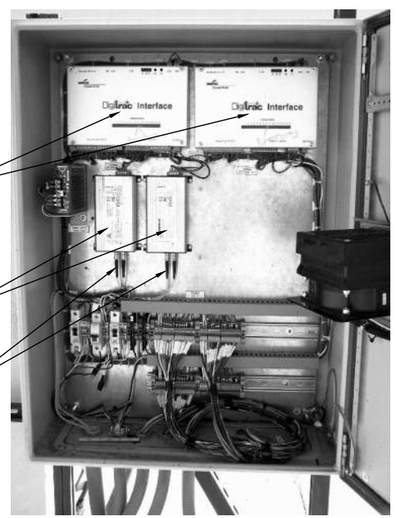

3 DIGITAL INTERFACE UNIT WITHOUT LOGITRAC ADAPTER
NOT TO SCALE

4 CUTOUT ENCLOSURE, TYP.
NOT TO SCALE

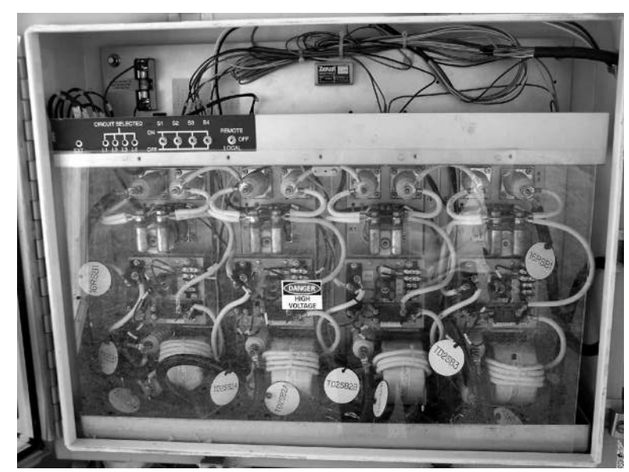

5 CIRCUIT SELECTOR SWITCH
NOT TO SCALE

COLORADO LICENSED
ADRON LEAN
52246
2/15/19
PROFESSIONAL ENGINEER

CITY & COUNTY of DENVER

DENVER INTERNATIONAL AIRPORT

LEAN ENGINEERING

RUNWAY 17R-35L COMPLEX PAVEMENT REHABILITATION PACKAGE 1

ISSUE RECORD

NO.	BY	PURPOSE	DATE	CKD
1	LE	50% DESIGN	09/14/18	DL
2	LE	90% DESIGN	10/26/18	DL
3	LE	BID	12/26/18	DL
4	LE	CONSTRUCTION	2/15/19	DL

SCALE: AS INDICATED

DATE: FEBRUARY 15, 2019

DRAWN BY: KV

CHECKED BY: JA

FAA AIP NO:

WORK BREAKDOWN NO.

DESIGN CONTRACT NO. 201735882

CONST. CONTRACT NO. 201846271

VOLUME NO.

SHEET TITLE: GENERAL CSS EQUIPMENT PHOTOS

SHEET NO. EL713

CADD FILE NO. _201735882-B1EELD-5276

b:\dropbox (lean photometrics)\active projects\1571801a rwy den 17r-35l reconstruction\01 drawings\working drawings\Sheets_201735882-B1EELD-5276.dwg Feb 12, 2019 - 5:23pm Kat

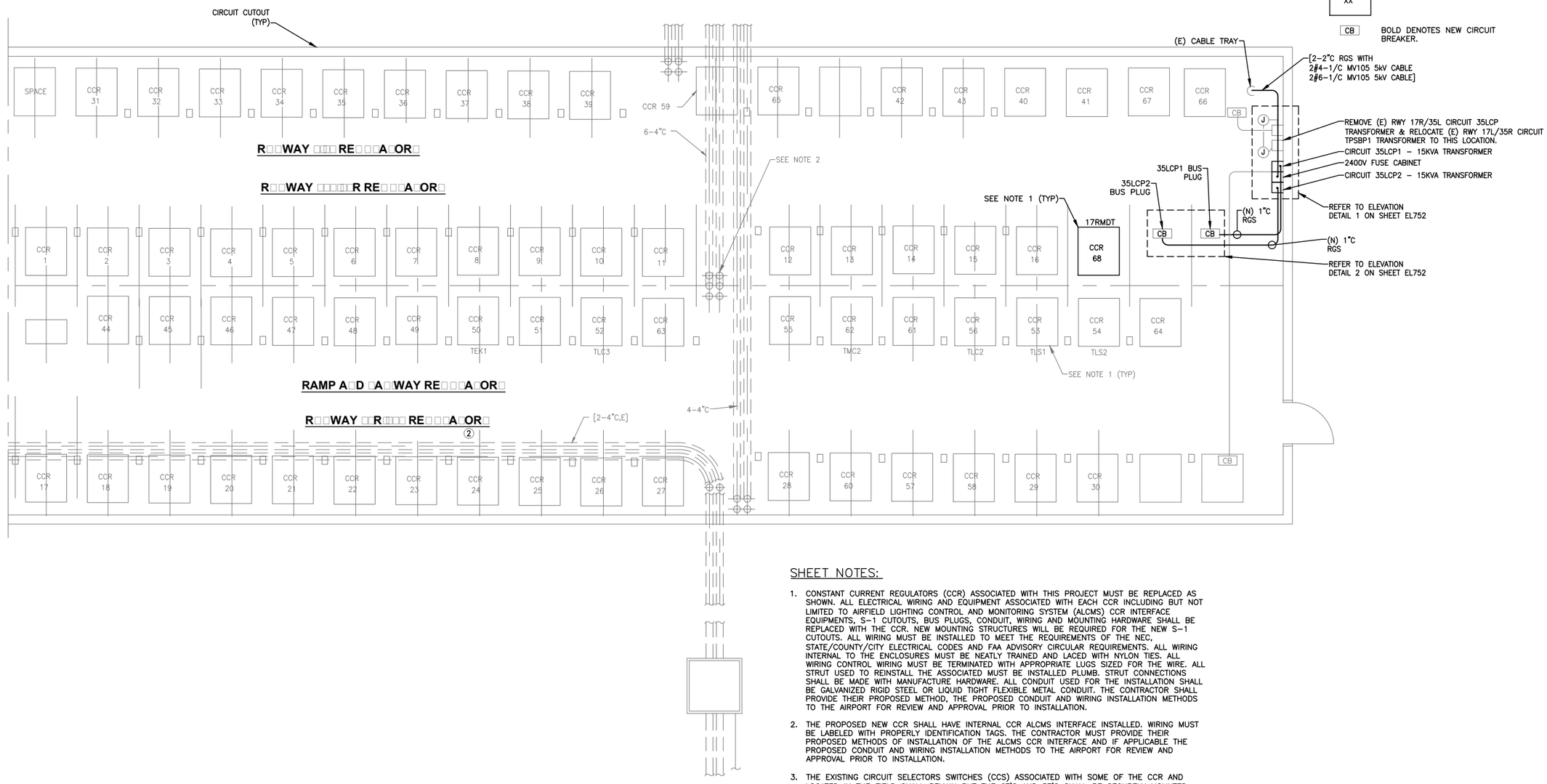

NOTES:

1. SEE SHEETS E-001 FOR GENERAL ELECTRICAL NOTES.

LEGEND:

CCR XX — BOLD DENOTES NEW REGULATOR.

CB — BOLD DENOTES NEW CIRCUIT BREAKER.

SHEET NOTES:

1. CONSTANT CURRENT REGULATORS (CCR) ASSOCIATED WITH THIS PROJECT MUST BE REPLACED AS SHOWN. ALL ELECTRICAL WIRING AND EQUIPMENT ASSOCIATED WITH EACH CCR INCLUDING BUT NOT LIMITED TO AIRFIELD LIGHTING CONTROL AND MONITORING SYSTEM (ALCMS) CCR INTERFACE EQUIPMENTS, S-1 CUTOUTS, BUS PLUGS, CONDUIT, WIRING AND MOUNTING HARDWARE SHALL BE REPLACED WITH THE CCR. NEW MOUNTING STRUCTURES WILL BE REQUIRED FOR THE NEW S-1 CUTOUTS. ALL WIRING MUST BE INSTALLED TO MEET THE REQUIREMENTS OF THE NEC, STATE/COUNTY/CITY ELECTRICAL CODES AND FAA ADVISORY CIRCULAR REQUIREMENTS. ALL WIRING INTERNAL TO THE ENCLOSURES MUST BE NEATLY TRAINED AND LACED WITH NYLON TIES. ALL WIRING CONTROL WIRING MUST BE TERMINATED WITH APPROPRIATE LUGS SIZED FOR THE WIRE. ALL STRUT USED TO REINSTALL THE ASSOCIATED MUST BE INSTALLED PLUMB. STRUT CONNECTIONS SHALL BE MADE WITH MANUFACTURE HARDWARE. ALL CONDUIT USED FOR THE INSTALLATION SHALL BE GALVANIZED RIGID STEEL OR LIQUID TIGHT FLEXIBLE METAL CONDUIT. THE CONTRACTOR SHALL PROVIDE THEIR PROPOSED METHOD, THE PROPOSED CONDUIT AND WIRING INSTALLATION METHODS TO THE AIRPORT FOR REVIEW AND APPROVAL PRIOR TO INSTALLATION.
2. THE PROPOSED NEW CCR SHALL HAVE INTERNAL CCR ALCMS INTERFACE INSTALLED. WIRING MUST BE LABELED WITH PROPERLY IDENTIFICATION TAGS. THE CONTRACTOR MUST PROVIDE THEIR PROPOSED METHODS OF INSTALLATION OF THE ALCMS CCR INTERFACE AND IF APPLICABLE THE PROPOSED CONDUIT AND WIRING INSTALLATION METHODS TO THE AIRPORT FOR REVIEW AND APPROVAL PRIOR TO INSTALLATION.
3. THE EXISTING CIRCUIT SELECTORS SWITCHES (CCS) ASSOCIATED WITH SOME OF THE CCR AND LOCATED IN THE FIELD SHALL REMAIN BUT THE CT'S AND PT'S SHALL BE SECURELY MOUNTED WITH SCREWS WITHIN THE CCS AND NEW LINE AND LOAD WIRING SHALL BE INSTALLED TO THE CCS. THE CONTRACTOR SHALL PROVIDE ALL NEW LINE AND LOAD WIRING TO THE CSS. WIRING SHALL BE LABELED WITH THE PROPER IDENTIFICATION TAGS. ALL WIRING INTERNAL TO THE ENCLOSURES SHALL BE NEATLY TRAINED AND LACED WITH NYLON TIES.
4. LOOP CIRCUITS 35,17R,17RC, AND 35LC THROUGH EXISTING RVR CURRENT TRANSFORMERS LOCATED IN THE EXISTING CABLE TRAY JUNCTION BOX.
5. BUS PLUG REPLACEMENTS SHALL BE MANUFACTURED BY GENERAL ELECTRIC #CSB33SELG WITH SELA 3P3W, 30A, AC, 480V, 65IC STANDARD COMMERCIAL CIRCUIT BREAKERS FOR 30 AMP BUS PLUGS, 3CSB36SELG WITH SELA 3P3W, 60A, AC, 480V, 65IC STANDARD COMMERCIAL CIRCUIT BREAKERS FOR 60 AMP BUS PLUGS, #CSB39SELG WITH SELA 3P3W, 90A, AC, 480V, 65IC STANDARD COMMECIAL CIRCUIT BREAKERS FOR 90 AMP BUS PLUGS.
6. NEW CCRS SHALL BE LINED UP WITH THE FRONTS OF THE CCRS LINED UP.
7. CONTRACTOR SHALL PROTECT THE EXISTING ADB ACE UNITS AND FIELD INSTALLATION BRITE REMOTE UNITS AND DELIVER TO THE AIRPORT IMMEDIATELY AFTER REMOVAL.

COLORADO LICENSED
JASON LEAN
52246
2/15/19
PROFESSIONAL ENGINEER

CITY & COUNTY of DENVER

DENVER INTERNATIONAL AIRPORT

LEAN ENGINEERING

RUNWAY 17R-35L COMPLEX PAVEMENT REHABILITATION PACKAGE 1

ISSUE RECORD

NO.	BY	PURPOSE	DATE	CKD
1	LE	50% DESIGN	09/14/18	DL
2	LE	90% DESIGN	10/26/18	DL
3	LE	BID	12/26/18	DL
4	LE	CONSTRUCTION	2/15/19	DL

SCALE: AS INDICATED

DATE: FEBRUARY 15, 2019

DRAWN BY: KV

CHECKED BY: JA

FAA AIP NO:

WORK BREAKDOWN NO.

DESIGN CONTRACT NO. 201735882

CONST. CONTRACT NO. 201846271

VOLUME NO.

SHEET TITLE: EAST VAULT EQUIPMENT PLAN

SHEET NO. EL751

CADD FILE NO. _201735882-B1EELD-6289

D:\dropbox (lean photometrics)\active projects\1517680ia rsh den 17-35l reconstruction\01 drawings\working drawings\Sheets_201735882-B1EELD-6289.dwg Feb 12, 2019 - 5:23pm Kat

SHEET NOTES:

1. LOCATE EXISTING UNUSED PLUG-IN SPACE ON EACH RESPECTIVE BUSDUCT. PROVIDE NEW PLUG-IN 30A/2P CIRCUIT BREAKERS, 22 KAIC, ONE FOR EACH BUSDUCT, WITH HANDLE OPERABLE FROM THE FLOOR USING A BREAKER STICK. PLUG-IN ASSEMBLY MUST BE COMPATIBLE WITH EXISTING BUSDUCT. PROVIDE (1) – BREAKER STICK FOR OPERATION OF THESE BREAKERS FROM THE FLOOR.
2. PROVIDE 1" RGS CONDUIT RACEWAY FROM EACH NEW PLUG-IN BREAKER TO RESPECTIVE 15 KVA DRY TYPE TRANSFORMER. PROVIDE 2 – 1/C 8AWG, CU, 600V., THWN-2, AND 1 – 1/C 10 AWG, CU, 600V, THWN-2, EQUIPMENT GROUND CONDUCTORS IN 1" C.
3. PROVIDE CUSTOM 15 KVA, DRY-TYPE TRANSFORMER, 480V, 1 PHASE, 2-WIRE PRIMARY TO 2,400V, 1 PHASE, 2-WIRE SECONDARY. TRANSFORMER INSULATION TO BE RATED 220 DEG. CELSIUS. CONNECT TRANSFORMER TO STEP VOLTAGE UP TO 2,400V. MGM TRANSFORMER CO., OR APPROVED EQUAL.
4. PROVIDE 100A., 5.2 KV, FUSIBLE, ENCLOSED CUTOUT WITH 10A FUSE, ABB TYPE EU, OR APPROVED EQUAL FOR EACH 5 KV CONDUCTOR IN VAULT.
5. PROVIDE 2 – 1/C 2 AWG, CU, MV-105, EPR, SHLD, 5 KV CABLES PER CIRCUIT. GROUND SHIELDING TO EXISTING VAULT GROUND SYSTEM. USE EXISTING CONDUITS WHERE AVAILABLE, EXCEPT WHERE NEW CONDUIT IS SHOWN TO BE INSTALLED.
6. REFER TO DRAWING EL759, FOR 5KV CABLE TO 'T-1', 'T-2', 'T-3', & 'T-4'.

NOTES:

1. SEE SHEETS E-001 FOR GENERAL ELECTRICAL NOTES.

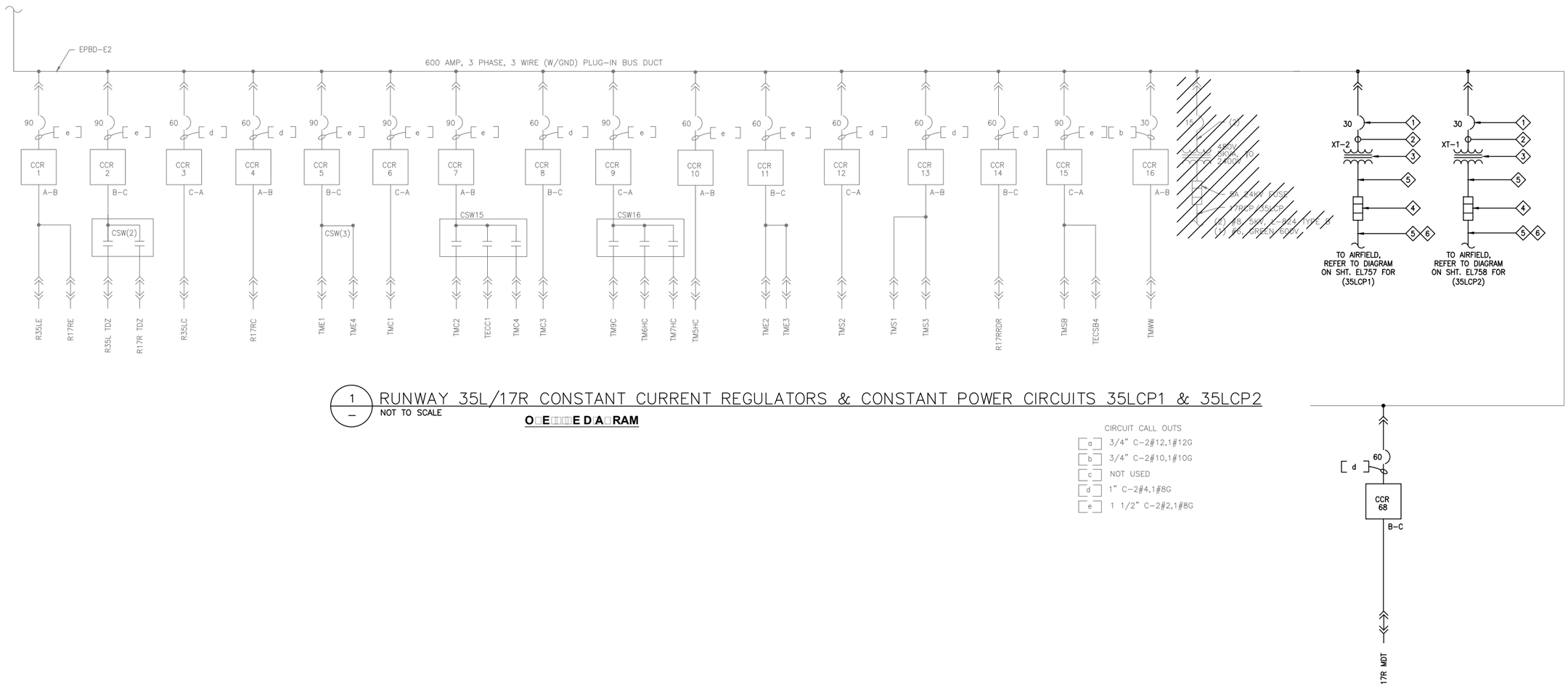

1 RUNWAY 35L/17R CONSTANT CURRENT REGULATORS & CONSTANT POWER CIRCUITS 35LCP1 & 35LCP2
NOT TO SCALE

O E E D A RAM

CIRCUIT CALL OUTS

- a 3/4" C-2#12,1#12G
- b 3/4" C-2#10,1#10G
- c NOT USED
- d 1" C-2#4,1#8G
- e 1 1/2" C-2#2,1#8G

CITY & COUNTY of DENVER

DENVER INTERNATIONAL AIRPORT

LEAN ENGINEERING

RUNWAY 17R-35L COMPLEX PAVEMENT REHABILITATION PACKAGE 1

ISSUE RECORD

NO.	BY	PURPOSE	DATE	CKD
1	LE	50% DESIGN	09/14/18	DL
2	LE	90% DESIGN	10/26/18	DL
3	LE	BID	12/26/18	DL
4	LE	CONSTRUCTION	2/15/19	DL

SCALE: AS INDICATED

DATE: FEBRUARY 15, 2019

DRAWN BY: KV

CHECKED BY: JA

FAA AIP NO:

WORK BREAKDOWN NO.

DESIGN CONTRACT NO. 201735882

CONST. CONTRACT NO. 201846271

VOLUME NO.

SHEET TITLE: RWY 17R35L ONE LINE DIAGRAM

SHEET NO. EL756

CADD FILE NO. _201735882-B1EELD-6289

COLORADO LICENSED PROFESSIONAL ENGINEER DORON LEAN 52246 2/15/19

D:\dropbox (lean photometrics)\active projects\1571801a rwy den 17r-35l reconstruction\01 drawings\working drawings\Sheets_201735882-B1EELD-6289.dwg Feb 12, 2019 - 5:23pm Kat

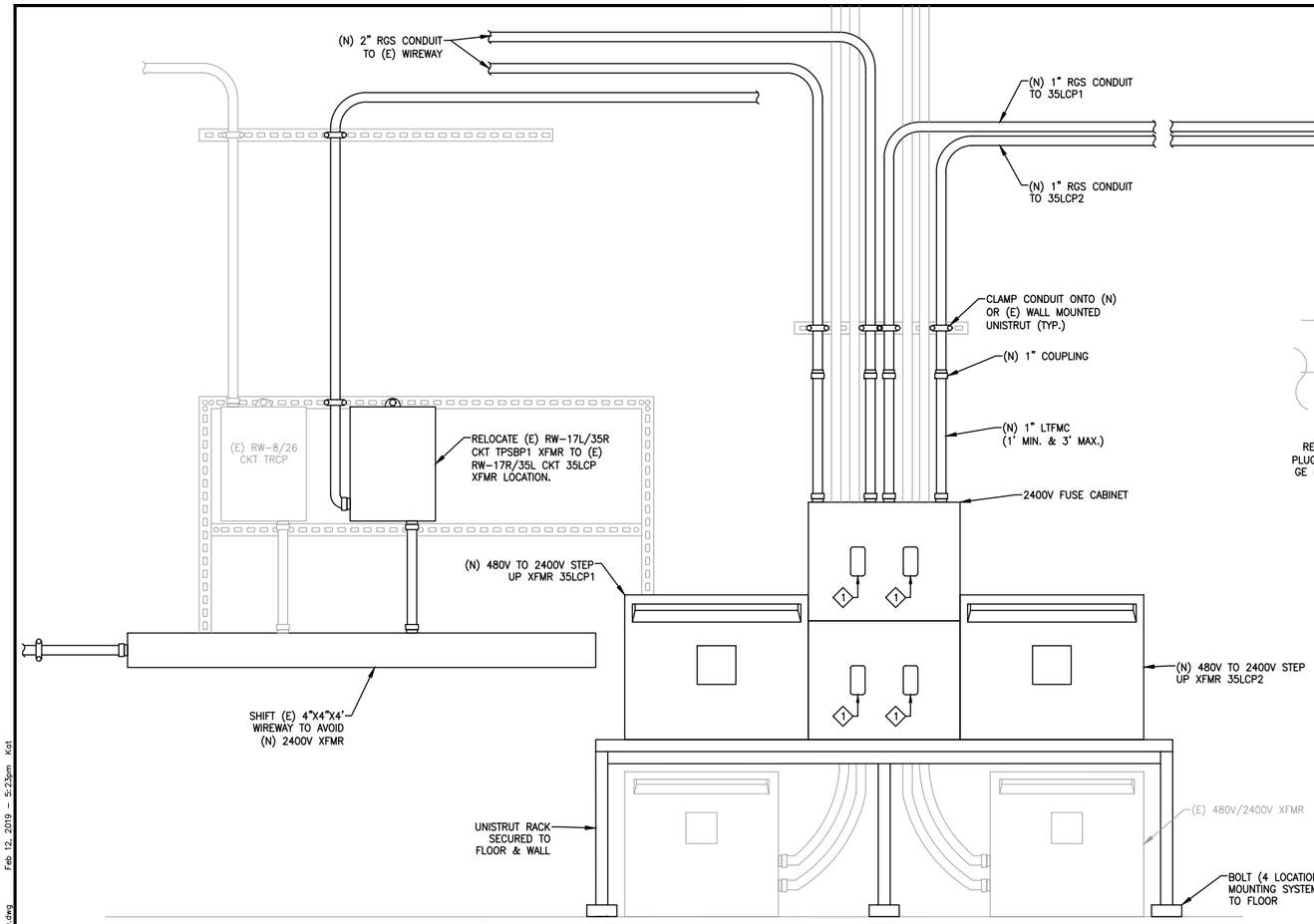

1 ELEVATION VIEW OF 35LCP1 & 35LCP2 TRANSFORMERS & CUTOUTS
NOT TO SCALE

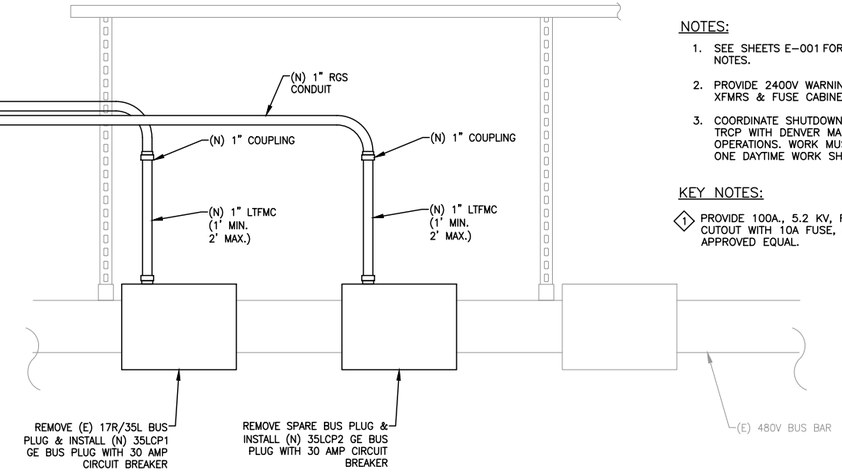

2 ELEVATION VIEW OF 35LCP1 & 35LCP2 BUS PLUG
NOT TO SCALE

NOTES:

1. SEE SHEETS E-001 FOR GENERAL ELECTRICAL NOTES.
2. PROVIDE 2400V WARNING LABELS ON ALL (N) XFMRS & FUSE CABINETS
3. COORDINATE SHUTDOWN OF CKT TPSBP1 & CKT TRCP WITH DENVER MAINTENANCE & AIRPORT OPERATIONS. WORK MUST BE COMPLETED IN ONE DAYTIME WORK SHIFT.

KEY NOTES:

1. PROVIDE 100A., 5.2 KV, FUSIBLE, ENCLOSED CUTOUT WITH 10A FUSE, ABB TYPE EU, OR APPROVED EQUAL.

2A (E) BUS PLUG LOCATIONS
FOR REFERENCE ONLY

1A (E) EAST VAULT 480V/2400V TRANSFORMERS
FOR REFERENCE ONLY

1B TYPICAL NEW TRANSFORMER CONFIGURATION
FOR REFERENCE ONLY

COLORADO LICENSED
TORON LEAN
52246
2/15/19
PROFESSIONAL ENGINEER

CITY & COUNTY of DENVER

DENVER INTERNATIONAL AIRPORT

LEAN ENGINEERING

RUNWAY 17R-35L COMPLEX PAVEMENT REHABILITATION PACKAGE 1

ISSUE RECORD

NO.	BY	PURPOSE	DATE	CKD
1	LE	50% DESIGN	09/14/18	DL
2	LE	90% DESIGN	10/26/18	DL
3	LE	BID	12/26/18	DL
4	LE	CONSTRUCTION	2/15/19	DL

SCALE: AS INDICATED
DATE: FEBRUARY 15, 2019
DRAWN BY: KV
CHECKED BY: JA
FAA AIP NO:
WORK BREAKDOWN NO.
DESIGN CONTRACT NO. 201735882
CONST. CONTRACT NO. 201846271
VOLUME NO.
SHEET TITLE: EAST VAULT EQUIPMENT PLAN ELEVATION
SHEET NO. EL752
294 OF 396
CADD FILE NO. _201735882-B1EELD-6289

D:\dropbox (lean photometrics)\active projects\157180\a rah den 17-35 reconstruction\01 drawings\working drawings\Sheets_201735882-B1EELD-6289.dwg Feb 12, 2019 - 5:23pm Kat

EAST VAULT LIGHTING EQUIPMENT AND CABLE SCHEDULE

EQUIPMENT IDENTIFIER	EQUIPMENT TYPE	EQUIPMENT NUMBER	REGULATOR		CIRCUIT DESCRIPTION	CIRCUIT NAME	CONDUCTORS REQUIRED	CONDUIT ROUTE	CABLE NUMBERS		CONTROL CABLE	CIRCUIT BKR EQUIPMENT NUMBER	CUTOUT EQUIPMENT NUMBER	AIRFIELD LIGHTING CIRCUIT MONITERING SYSTEM	
			SIZE	STEPS					L1	L2				CONTROL CABLE TO–	INSTRUMENT CABLE TO–
CCR1	REGULATOR	08501	30	5							12/C #16 TYPE 1	08571		12/C #16 TYPE 1	
					RW–35L EDGE	35LE	2–1/C #8 5kV	F	35LE–1	35LE–2	12/C #16 TYPE 1		08631		
					RW–17R EDGE	17RE	2–1/C #8 5kV	F	17RE–1	17RE–2			08632		
CCR2	REGULATOR	08503	30	5							12/C #16 TYPE 1	08572		12/C #16 TYPE 1	
CSW2	SWITCH	08504			RW–35L TDZ	35LTDZ	2–1/C #8 5kV	F	35LTDZ–1	35LTDZ–2	12/C #16 TYPE 1		08633		
CSW2	SWITCH				RW–17R TDZ	17RTDZ	2–1/C #8 5kV	F	17RTDZ–1	17RTDZ–2			08634		
CCR3	REGULATOR	08505	20	5	RW–35L CENTERLINE	35LC	2–1/C #8 5kV	F	35LC–1	35LC–2	12/C #16 TYPE 1	08573	08635	12/C #16 TYPE 1	
CCR4	REGULATOR	08506	20	5	RW–17R CENTERLINE	17RC	2–1/C #8 5kV	F	17RC–1	17RC–2	12/C #16 TYPE 1	08574	08636	12/C #16 TYPE 1	
CCR5	REGULATOR	08507	30	3							12/C #16 TYPE 1	08575		12/C #16 TYPE 1	
					PARALLEL TW–M EDGE LIGHTS	TME1	2–1/C #8 5kV	F	TME1–1	TME1–2	12/C #16 TYPE 1		08637		
CSW3	SWITCH	08509			TW–M EDGE LIGHTS	TME4	2–1/C #8 5kV	F	TME4–1	TME4–2			08745		
CCR6	REGULATOR	08510	30		TW–M CENTERLINE LIGHTS	TMC1	2–1/C #8 5kV	F	TMC1–1	TMC1–2	12/C #16 TYPE 1	08578	08639	12/C #16 TYPE 1	
CCR7	REGULATOR	08726	30	3							12/C #16 TYPE 1	08579		12/C #16 TYPE 1	
CSW15	SWITCH				TW–M CENTERLINE LIGHTS	TMC2	2–1/C #8 5kV	F	TMC2–1	TMC2–2	12/C #16 TYPE 1		08640		
CSW15	SWITCH				TW–M CENTERLINE LIGHTS	TECC1	2–1/C #8 5kV	F	TECC1–1	TECC1–2			08576		
CSW15	SWITCH	08511			TW–M CENTERLINE LIGHTS	TMC4	2–1/C #8 5kV	F	TMC4–1	TMC4–2			08577		
CCR8	REGULATOR	08512	20	3	TW–M CENTERLINE LIGHTS	TMC3	2–1/C #8 5kV	F	TMC3–1	TMC3–2	12/C #16 TYPE 1	08580	08641	12/C #16 TYPE 1	
CCR9	REGULATOR	08727	30	3							12/C #16 TYPE 1	08581		12/C #16 TYPE 1	
CSW16	SWITCH				TW–M CENTER LINE LIGHTS	TMC9	2–1/C #8 5kV	F	TMC9–1	TMC9–2	12/C #16 TYPE 1		08642		
CSW16	SWITCH				TW–M CENTER LINE LIGHTS	TM6HC	2–1/C #8 5kV	F	TM6HC–1	TM6HC–2			08728		
CSW16	SWITCH	08513			TW–M CENTER LINE LIGHTS	TM7HC	2–1/C #8 5kV	F	TM7HC–1	TM7HC–2			08729		
CCR10	REGULATOR		20	3	TW–M CENTER LINE LIGHTS	TM5HC	2–1/C #8 5kV	F	TM5HC–1	TM5HC–2	12/C #16 TYPE 1	08582	08643	12/C #16 TYPE 1	
CCR11	REGULATOR		20	3	TW–M CENTER LINE LIGHTS										
					TW–M EDGE LIGHTS	TME2	2–1/C #8 5kV	F	TME2–1	TME2–2			08638		
					TW–M EDGE LIGHTS	TME3	2–1/C #8 5kV	F	TME3–1	TME3–2			08715		
CCR12	REGULATOR	08515	20	3	TW–M SIGNS	TMS2	2–1/C #8 5kV	E	TMS2–1	TMS2–2	12/C #16 TYPE 1	08584	08645	12/C #16 TYPE 1	
CCR13	REGULATOR	08516	20	3							12/C #16 TYPE 1	08585		12/C #16 TYPE 1	
					TW–M SIGNS	TMS1	2–1/C #8 5kV	E	TMS1–1	TMS1–2	12/C #16 TYPE 1		08644		
					TW–M SIGNS	TMS3	2–1/C #8 5kV	E	TMS3–1	TMS3–2			08646		
CCR14	REGULATOR	08517	20	3	17L/35R RDR	17RRDR	2–1/C #8 5kV	E	17RRDR–1	17RRDR–2	12/C #16 TYPE 1	08586	08647	12/C #16 TYPE 1	
CCR15	REGULATOR	08518	30	3	STOP BARS	TMSB	2–1/C #8 5kV	E	TMSB–1	TMSB–2	12/C #16 TYPE 1	08587	08648	12/C #16 TYPE 1	
					TW EC STOP BAR @ TW–M	TECSB4	2–1/C #8 5kV	E	TECSB4–1	TECSB4–2	12/C #16 TYPE 1		08649		
CCR16	REGULATOR	08520	10	3	TW–M WIG WAGS	TMWW	2–1/C #8 5kV	E	TMWW–1	TMWW–2	12/C #16 TYPE 1	08588	08651	12/C #16 TYPE 1	
CCR17	REGULATOR	08521	20	5	RW–35R EDGE	R35RE1	2–1/C #8 5kV	D	R35RE1–1	R35RE1–2	12/C #16 TYPE 1	08589	08652	12/C #16 TYPE 1	
CCR18	REGULATOR	08522	20	5	RW–17L EDGE	R17LE1	2–1/C #8 5kV	D	R17LE1–1	R17LE1–2	12/C #16 TYPE 1	08590	08653	12/C #16 TYPE 1	
CCR19	REGULATOR	08523	20	5							12/C #16 TYPE 1	08591		12/C #16 TYPE 1	
CSW4	SWITCH	08524			RW–35R TDZ	R35RTDZ1	2–1/C #8 5kV	D	R35RTDZ1–1	R35RTDZ1–2	12/C #16 TYPE 1		08654		
CSW4	SWITCH				RW–17L TDZ	R17LTDZ1	2–1/C #8 5kV	D	R17LTDZ1–1	R17LTDZ1–2			08655		
CCR20	REGULATOR	08525	20	5	RW–35R CENTERLINE	R35RC1	2–1/C #8 5kV	D	R35RC1–1	R35RC1–2	12/C #16 TYPE 1	08592	08656	12/C #16 TYPE 1	
CCR21	REGULATOR	08526	20	5	RW–17L CENTERLINE	R17LC1	2–1/C #8 5kV	D	R17LC1–1	R17LC1–2	12/C #16 TYPE 1	08593	08657	12/C #16 TYPE 1	
CCR22	REGULATOR	08527	30	3							12/C #16 TYPE 1	08594		12/C #16 TYPE 1	
CSW5	SWITCH	08228			PARALLEL TW–P EDGE (SOUTH)	TPE1	2–1/C #8 5kV	D	TPE1–1	TPE1–2	12/C #16 TYPE 1		08658		
CSW5	SWITCH				PARALLEL TW–P EDGE (NORTH)	TPE2	2–1/C #8 5kV	D	TPE2–1	TPE2–2			08659		
CSW5	SWITCH				TW EC EDGE	TECE1	2–1/C #8 5kV	D	TECE1–1	TECE1–2			08660		
CSW5	SWITCH				SPARE										
CCR23	REGULATOR	08529	20	3	TW ED AND P7 EDGE	TEDP7E1	2–1/C #8 5kV	D	TEDP7E1–1	TEDP7E1–2	12/C #16 TYPE 1	08595	08661	12/C #16 TYPE 1	
CCR24	REGULATOR	08530	20								12/C #16 TYPE 1	08596		12/C #16 TYPE 1	
CWS18	SWITCH	08990			TW–P SIGNAGE	TPS1	2–1/C #8 5kV	D	TPS1–1	TPS1–2			08662		
CWS18	SWITCH				TW–P SIGNAGE	TPS2	2–1/C #8 5kV	D	TPS2–1	TPS2–2			08663		
CCR25	REGULATOR	08531	30	3	TW–P CENTERLINE LIGHTS (SOUTH)	TPC1	2–1/C #8 5kV	D	TPC1–1	TPC1–2	12/C #16 TYPE 1	08597	08664	12/C #16 TYPE 1	
CCR26	REGULATOR	08532	30	3	TW–P CENTERLINE LIGHTS (NORTH)	TPC2	2–1/C #8 5kV	D	TPC2–1	TPC2–2	12/C #16 TYPE 1	08598	08665	12/C #16 TYPE 1	
CCR27	REGULATOR	08533	30	3							12/C #16 TYPE 1	08599		12/C #16 TYPE 1	
CSW6	SWITCH	08534			TW EC CENTERLINE	TECC2	2–1/C #8 5kV	D	TECC2–1	TECC2–2	12/C #16 TYPE 1		08666		
CSW6	SWITCH				TW P7 CENTERLINE (HIGHSPEED)	TP7HC1	2–1/C #8 5kV	D	TP7HC1–1	TP7HC1–2			08667		
CSW6	SWITCH				TW ED CENTERLINE	TEDC1	2–1/C #8 5kV	D	TEDC1–1	TEDC1–2			08668		
CSW6	SWITCH				TW EC LEAD ON LIGHTS	TECSB5	2–1/C #8 5kV	D	TECSB5–1	TECSB5–2			08629		
CCR28	REGULATOR	08535	10	3	TW P6 CENTERLINE LIGHTS	TP6HC1	2–1/C #8 5kV	D	TP6HC1–1	TP6HC1–2	12/C #16 TYPE 1	08600	08716	12/C #16 TYPE 1	
CCR60	REGULATOR	08730	10	3	TW P7 CENTERLINE LIGHTS	TP7C1	2–1/C #8 5kV	D	TP7C1–1	TP7C1–2	12/C #16 TYPE 1	08731	08732	12/C #16 TYPE 1	
CCR57	REGULATOR	08724	20	3	TZ–4 CENTERLINE LIGHTS	TP4HC1	2–1/C #8 5kV	C	TP4HC1–1	TP4HC1–2	12/C #16 TYPE 1	08717	08718	12/C #16 TYPE 1	
CCR58	REGULATOR	08725	10	3	R35R WIG WAGS	R35RWW1	2–1/C #8 5kV	C	R35RWW1–1	R35RWW1–2	12/C #16 TYPE 1	08719	08720	12/C #16 TYPE 1	
CCR29	REGULATOR	08536	20	3	17L/35R WIND CONE	R35RRDRWC1	2–1/C #8 5kV	C	R35RRDRWC1–1	R35RRDRWC1–2	12/C #16 TYPE 1	08601	08669	12/C #16 TYPE 1	
CCR30	REGULATOR	08537	30	3	TW P AND EC STOP BARS	TPSB1	2–1/C #8 5kV	C	TPSB1–1	TPSB1–2	12/C #16 TYPE 1	08602	08670	12/C #16 TYPE 1	
CCR31	REGULATOR	08538	30	5	RW–8R EDGE	R8E	2–1/C #8 5kV	L	R8E–1	R8E–2	12/C #16 TYPE 1	08603	08671	12/C #16 TYPE 1	
CCR32	REGULATOR	08539	20	5	RW–8/26 CENTERLINE	R8C1	2–1/C #8 5kV	L	R8C1–1	R8C1–2	12/C #16 TYPE 1	08604	08672	12/C #16 TYPE 1	
CCR33	REGULATOR	08540	20	5	RW–8/26 CENTERLINE	R8C2	2–1/C #8 5kV	L	R8C2–1	R8C2–2	12/C #16 TYPE 1	08605	08673	12/C #16 TYPE 1	
CCR34	REGULATOR	08541	20	3	RW–8 SIGNS AND WINDCONE	RDRWC	2–1/C #8 5kV	L	RDRWC–1	RDRWC–2	12/C #16 TYPE 1	08606	08674	12/C #16 TYPE 1	
CCR35	REGULATOR	08542	20	5	RW–8 TDZ LIGHTS	R8TDZ	2–1/C #8 5kV	L	R8TDZ–1	R8TDZ–2	12/C #16 TYPE 1	08607	08675	12/C #16 TYPE 1	
CCR36	REGULATOR	08543	30	3							12/C #16 TYPE 1	08608		12/C #16 TYPE 1	
CSW7	SWITCH	08544			TW–R EDGE (WEST)	TRE1	2–1/C #8 5kV	L	TRE1–1	TRE1–2	12/C #16 TYPE 1		08676		
CSW7	SWITCH				TW–R EDGE (EAST)	TRE2	2–1/C #8 5kV	L	TRE2–1	TRE2–2			08677		
CCR37	REGULATOR	08545	30		TW–R CENTERLINE LIGHTS (WEST)	TRC1	2–1/C #8 5kV	L	TRC1–1	TRC1–2	12/C #16 TYPE 1	08609	08678	12/C #16 TYPE 1	
CCR38	REGULATOR	08546	20	3	TW–R CENTERLINE LIGHTS (WEST)	TRC2	2–1/C #8 5kV	L	TRC2–1	TRC2–2	12/C #16 TYPE 1	08610	08679	12/C #16 TYPE 1	
CCR39	REGULATOR	08547	30	3	TW–R CENTERLINE LIGHTS (EAST)	TRC3	2–1/C #8 5kV	L	TRC3–1	TRC3–2	12/C #16 TYPE 1	08611	08680	12/C #16 TYPE 1	
CCR59	REGULATOR	08723	20	3	TW–R–5 CENTERLINE LIGHTS	TRC4	2–1/C #8 5kV	K	TRC4–1	TRC4–2	12/C #16 TYPE 1	08721	08722	12/C #16 TYPE 1	
CCR40	REGULATOR	08548	20	3							12/C #16 TYPE 1	08612		12/C #16 TYPE 1	
CSW13	SWITCH	08991			TW–R SIGNS (WEST)	GS1	2–1/C #8 5kV	K	GS1–1	GS1–2	12/C #16 TYPE 1		08681		
CSW13	SWITCH				TW–R SIGNS (EAST)	GS2	2–1/C #8 5kV	K	GS2–1	GS2–2			08650		
CCR67	REGULATOR	08992	30	3	SOUTH CARGO CENTERLINE LIGHTS	TAC2	2–1/C #8 5kV	K	TAC2–1	TAC2–2	12/C #16 TYPE 1	08583		12/C #16 TYPE 1	
CCR66	REGULATOR	08993	10	3	SOUTH CARGO SIGNS	TAS1	2–1/C #8 5kV	K	TAS1–1	TAS1–2	12/C #16 TYPE 1			12/C #16 TYPE 1	
CCR41	REGULATOR	08549	30	3	SOUTH CARGO CENTERLINE LIGHTS	TAC1	2–1/C #8 5kV	K	TAC1–1	TAC1–2	12/C #16 TYPE 1	08613	08682	12/C #16 TYPE 1	
CCR42	REGULATOR	08550	30	3	TW–R STOP BARS	TRSB	2–1/C #8 5kV	K	TRSB–1	TRSB–2	12/C #16 TYPE 1	08614	08683	12/C #16 TYPE 1	
CCR43	REGULATOR	08551	10	3	TW–R WIG WAGS AND SIGNS	TRWW	2–1/C #8 5kV	K	TRWW–1	TRWW–2	12/C #16 TYPE 1	08615	08684	12/C #16 TYPE 1	
CCR44	REGULATOR	08552	10	3							12/C #16 TYPE 1	08616		12/C #16 TYPE 1	
CSW8	SWITCH	08553			TW ZN EDGE LIGHTS	TZNE1	2–1/C #8 5kV	J	TZNE1–1	TZNE1–2	12/C #16 TYPE 1		08685		
CSW8	SWITCH				TW WC EDGE LIGHTS	TWCE2	2–1/C #8 5kV	J	TWCE2–1	TWCE2–2			08686		
CSW8	SWITCH				SPARE										
CCR45	REGULATOR	08554	30	3							12/C #16 TYPE 1	08617		12/C #16 TYPE 1	
CSW9	SWITCH	08555			RAMP TW–AA CENTERLINE	TAAC1	2–1/C #8 5kV	J	TAAC1–1	TAAC1–2	12/C #16 TYPE 1		08688		
CSW9	SWITCH				RAMP TW–AN CENTERLINE	TANC1	2–1/C #8 5kV	J	TANC1–1	TANC1–2			08689		
CCR46	REGULATOR	08556	30	3							12/C #16 TYPE 1	08618		12/C #16 TYPE 1	
CSW10	SWITCH	08557			RAMP TW–AS CENTERLINE	TASC1	2–1/C #8 5kV	J	TASC1–1	TASC1–2	12/C #16 TYPE 1		08690		
CSW10	SWITCH				RAMP TW–BS CENTERLINE	TBSC	2–1/C #8 5kV	J	TBSC–1	TBSC–2			08691		
CCR47	REGULATOR	08558	30	3							12/C #16 TYPE 1	08619		12/C #16 TYPE 1	
CSW11	SWITCH	08559			RAMP TW–BN CENTERLINE	TBNC1	2–1/C #8 5kV	J	TBNC1–1	TBNC1–2	12/C #16 TYPE 1		08692		
CSW11	SWITCH				RAMP TW–CN CENTERLINE	TCNC1	2–1/C #8 5kV	J	TCNC1–1	TCNC1–2			08693		
CCR48	REGULATOR	08560	30	3							12/C #16 TYPE 1	08620		12/C #16 TYPE 1	
CSW12	SWITCH	08561			RAMP TW–CS CENTERLINE	TCSC1	2–1/C #8 5kV	J	TCSC1–1	TCSC1–2	12/C #16 TYPE 1		08694		
CSW12	SWITCH				RAMP TW–X CENTERLINE	TXC1	2–1/C #8 5kV	J	TXC1–1	TXC1–2			08695		
CCR49	REGULATOR	08562	30	3							12/C #16 TYPE 1	08621		12/C #16 TYPE 1	
CSW19	SWITCH				RAMP TW–L EDGE LIGHTS	TLE1	2–1/C #8 5kV	J	TLE1–1	TLE1–2	12/C #16 TYPE 1		08696		
CSW19	SWITCH				TAMP TW–L EDGE LIGHTS	TLE2	2–1/C #8 5kV	J	TLE2–1	TLE2–2			08697		
CSW19	SWITCH				SOUTH CARGO EDGE LIGHTS	TAE1	2–1/C #8 5kV	J	TAE1–1	TAE1–2			08687		
CSW19	SWITCH				SPARE										
CCR50	REGULATOR	08564	30	3	RAMP TW–K EDGE LIGHTS	TKE1	2–1/C #8 5kV	J	TKE1–1	TKE1–2	12/C #16 TYPE 1	08622	08698	12/C #16 TYPE 1	
CCR51	REGULATOR	08565	30	3	RAMP TW–L CENTERLINE LIGHTS	TLC1	2–1/C #8 5kV	J	TLC1–1	TLC1–2	12/C #16 TYPE 1	08623	08699	12/C #16 TYPE 1	
CCR52	REGULATOR	08566	20	3	RAMP TW–L CENTERLINE LIGHTS	TLC3	2–1/C #8 5kV	J	TLC3–1	TLC3–2	12/C #16 TYPE 1	08624	08700	12/C #16 TYPE 1	
CCR53	REGULATOR	08567	20	3	RAMP TW–L SIGNS	TLS1	2–1/C #8 5kV	I	TLS1–1	TLS1–2	12/C #16 TYPE 1	08625	08701	12/C #16 TYPE 1	
					RAMP TW–K SIGNS	TKS1	2–1/C #8 5kV	I	TKS1–1	TKS1–2			08994		
CCR54	REGULATOR	08568	20	3	RAMP TW–L SIGNS	TLS2	2–1/C #8 5kV	I	TLS2–1	TLS2–2	12/C #16 TYPE 1	08626	08702	12/C #16 TYPE 1	

NOTES:

1. SEE SHEETS E–001 FOR GENERAL ELECTRICAL NOTES.

NOTES:

1. THIS SHEET IS FOR REFERENCE ONLY. NO NEW CCR'S WILL BE INSTALLED ON THIS SHEET SCHEDULE.

COLORADO LICENSED
DIXON LEAN
52246
2/15/19
PROFESSIONAL ENGINEER

CITY & COUNTY of DENVER

DENVER INTERNATIONAL AIRPORT

LEAN ENGINEERING

RUNWAY 17R-35L COMPLEX PAVEMENT REHABILITATION PACKAGE 1

ISSUE RECORD

NO.	BY	PURPOSE	DATE	CKD
1	LE	50% DESIGN	09/14/18	DL
2	LE	90% DESIGN	10/26/18	DL
3	LE	BID	12/26/18	DL
4	LE	CONSTRUCTION	2/15/19	DL

SCALE: AS INDICATED

DATE: FEBRUARY 15, 2019

DRAWN BY: KV

CHECKED BY: JA

FAA AIP NO:

WORK BREAKDOWN NO.

DESIGN CONTRACT NO. 201735882

CONST. CONTRACT NO. 201846271

VOLUME NO.

SHEET TITLE: 17R35L CCR SCHEDULE

SHEET NO. EL753
295 OF 396

CADD FILE NO. _201735882-B1EELD-6289

D:\dropbox (lean photometrics)\active projects\15718010a rah den 17r-35l reconstruction\01 drawings\working drawings\Sheets_201735882-B1EELD-6289.dwg Feb 12, 2019 – 5:24pm Kat

NOTES:

1. INSTALLATION SHALL MEET ALL THE REQUIREMENTS OF THE NEC AND CITY/COUNTY OF DENVER CODE REQUIREMENTS INCLUDING BUT NOT LIMITED TO GROUNDING, STRAPPING OF CONDUIT, WIRE SIZE, ACCESSIBILITY.
2. ALL INSTALLATIONS SHALL BE DONE IN A NEAT AND PROFESSIONAL MANNER. THE INSTALLATION MEANS AND METHODS SHALL BE SUBMITTED TO THE AIRPORT FOR APPROVAL PRIOR TO INSTALLATION. INSTALLATION MEANS AND METHODS NOT APPROVED BY THE AIRPORT SHALL BE MODIFIED TO MEET THE APPROVAL OF THE AIRPORT AT NO ADDITIONAL COST TO THE AIRPORT.
3. CONTRACTOR SHALL REMOVE ALL EXISTING MOUNTING HARDWARE EXCEPT AS NOTED AND REPLACE WITH NEW MOUNTING HARDWARE.
4. EXISTING CCR INTERFACE UNITS FOR THE ALCMS SHALL BE PROTECTED AND DELIVERED TO THE AIRPORT IMMEDIATELY AFTER REMOVAL. CONTRACTOR SHALL BE RESPONSIBLE FOR REPLACEMENT OF ANY EXISTING INTERFACE UNITS THAT ARE DAMAGED DUE TO THE REMOVAL BY THE CONTRACTOR AT NO ADDITIONAL COST TO THE AIRPORT. COORDINATE WITH THE AIRPORT FOR LOCATION TO DELIVER THE UNITS.
5. EXISTING BUS PLUGS, S-1 CUTOUTS, CCR'S SHALL BE PROTECTED AND DELIVERED TO THE AIRPORT IMMEDIATELY AFTER REMOVAL. CONTRACTOR SHALL BE RESPONSIBLE FOR REPLACEMENT OF ANY EXISTING BUS PLUGS, S-1 CUTOUTS, CCR'S THAT ARE DAMAGED DUE TO THE REMOVAL BY THE CONTRACTOR AT NO ADDITIONAL COST TO THE AIRPORT. COORDINATE WITH THE AIRPORT FOR LOCATION TO DELIVER THE BUS PLUGS, S-1 CUTOUTS, CCR'S.
6. CONTRACTOR SHALL PROTECT ALL EXISTING CIRCUIT SELECTOR SWITCHES (CSS), ADB BRITE MASTER EQUIPMENT AND ANY OTHER EXISTING EQUIPMENT IN THE EAST AIRFIELD LIGHTING VAULT THAT IS NOT IDENTIFIED TO BE REMOVED AS PART OF THIS PROJECT. ANY EXISTING EQUIPMENT THAT IS TO REMAIN THAT IS DAMAGED BY THE CONTRACTOR SHALL BE REPLACED AND CALIBRATED AS REQUIRED FOR AN OPERATIONAL SYSTEM BY THE CONTRACTOR AT NO ADDITIONAL COST TO THE AIRPORT.
7. CONTRACTOR SHALL BE RESPONSIBLE FOR THE DISPOSAL OF ALL REMOVED CONDUIT, WIRING AND MOUNTING HARDWARE REMOVED FROM THE EXISTING INSTALLATION.
8. EQUIPMENT GROUNDING CONDUCTOR SHALL BE #6 AWG COPPER WITH PROPERLY SIZED LUGS.
9. CONDUIT SHALL BE GALVANIZED RIGID STEEL (GRS) OR LIQUIDTIGHT FLEXIBLE METAL CONDUIT (LFMC). THE LENGTH OF THE LFMC SHALL NOT EXCEED SIX (6) FEET.
10. UNLESS NOTED OTHERWISE AT A MINIMUM THE CONTRACTOR SHALL SIZE CONDUIT TO MEET THE REQUIREMENTS OF COMBINATION OF THE NUMBER OF CONDUCTORS, INSULATION TYPE AND SIZE OF CONDUCTORS.
11. UNLESS OTHERWISE NOTED AT A MINIMUM THE SIZE OF EQUIPMENT GROUNDING CONDUCTORS SHALL MEET CODE REQUIREMENTS.
12. EQUIPMENT SHALL BE INSTALLED WITH THE FRONT IN A STRAIGHT LINE WITH OTHER EQUIPMENT AND IN-LINE WITH EXISTING EQUIPMENT RACKING, I.E. CCR'S SHALL LINE UP WITH OTHER CCR'S INSTALLED , CCR INTERFACE UNITS SHALL LINE UP WITH OTHER CCR INTERFACE UNITS , ETC. CODE REQUIRED ACCESSIBILITY REQUIREMENTS SHALL BE MET.
13. ALL EQUIPMENT AND MOUNTING HARDWARE SHALL BE INSTALLED LEVEL.
14. STRUT SHALL BE CONNECTED WITH FACTORY MADE BRACKETS, SPRING BOLTS, FLOOR PLATES, ETC. ALL EQUIPMENT MOUNTING HARDWARE SHALL BE SECURE AND BRACED TO PREVENT MOVEMENT. MOUNTING HARDWARE THAT MOVES BY HAND PRESSURE SHALL BE REPLACED OR CORRECTED AT NOT ADDITIONAL COST TO THE AIRPORT.

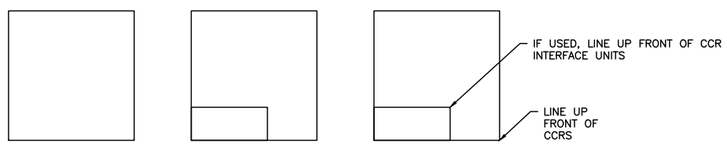

1 CCR INSTALL DETAIL
NOT TO SCALE

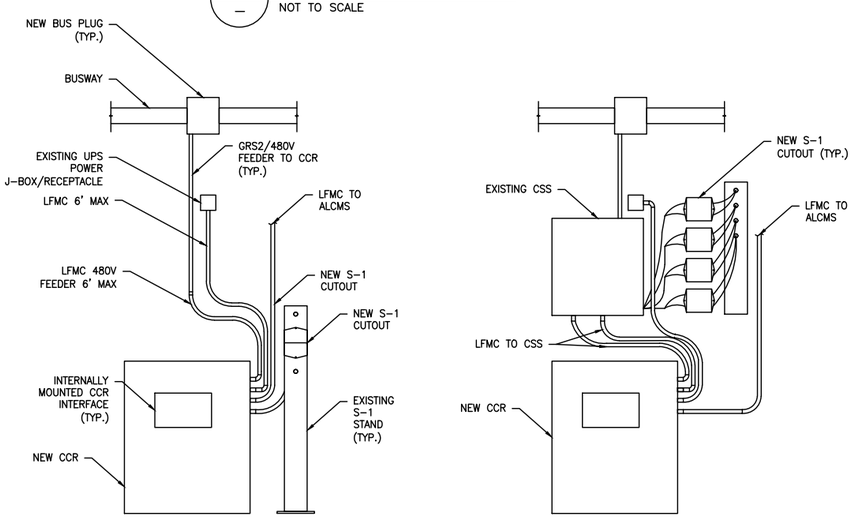

3A NO CSS
NOT TO SCALE

3B WITH CSS
NOT TO SCALE

3 TYPICAL CCR WITH INTERNAL INTERFACE
NOT TO SCALE

NOTES:

1. SEE SHEETS E-001 FOR GENERAL ELECTRICAL NOTES.

* BOLD DENOTES (N) CCR,

2 EXPLANATION OF CIRCUIT DESIGNATION
NOT TO SCALE

COLORADO LICENSED
DIXON LEA
52246
2/15/19
PROFESSIONAL ENGINEER

CITY & COUNTY of DENVER

DENVER INTERNATIONAL AIRPORT

LEAN ENGINEERING

RUNWAY 17R-35L COMPLEX PAVEMENT REHABILITATION PACKAGE 1

ISSUE RECORD

NO.	BY	PURPOSE	DATE	CKD
1	LE	50% DESIGN	09/14/18	DL
2	LE	90% DESIGN	10/26/18	DL
3	LE	BID	12/26/18	DL
4	LE	CONSTRUCTION	2/15/19	DL

SCALE: AS INDICATED
DATE: FEBRUARY 15, 2019
DRAWN BY: KV
CHECKED BY: JA
FAA AIP NO:
WORK BREAKDOWN NO.
DESIGN CONTRACT NO. 201735882
CONST. CONTRACT NO. 201846271
VOLUME NO.
SHEET TITLE: CIRCUIT DESIGNATION
SHEET NO. EL755
296 OF 396
CADD FILE NO. _201735882-B1EELD-6289

D:\dropbox (lean photometrics)\active projects\1571801a rah den 17r-35l reconstruction\01 drawings\working drawings\Sheets_201735882-B1EELD-6289.dwg Feb 12, 2019 - 5:24pm Kat

NOTES:

1. SEE SHEETS E-001 FOR GENERAL ELECTRICAL NOTES.

VOLTAGE DROP CALCULATION

Form Date: 12/31/2017

PROJECT: Denver International RW 17R-35L
NUMBER:
VOLT DROP CALCULATION BASED ON CHAPTER 9 OF THE NATIONAL ELECTRICAL CODE
PREPARED BY: Gil Heinrichs, LEAN ENGINEERING

SYSTEM VOLTAGE: 2400
SYSTEM PHASE: 1

METRIC (Y/N): N Date: 12/4/2018

LOAD DESCRIPTION	NOMINAL VOLTAGE	SYSTEM PHASE	STARTING VOLTAGE	POWER FACTOR	LENGTH OF CIRCUIT IN FEET	CURRENT IN AMPS	FINAL WIRE SIZE	FINAL WIRE RUNS	REQ'D GND WIRE SIZE	LINE TO NEUTRAL Y/N	MAGNETIC CONDUIT Y/N	WIRE TYPE Copper Aluminum	VOLTS DROPPED	SINGLE RUN PERCENT	ADD % TO OTHER LOAD Y/N	ADD TO WHAT LOAD	ENDING VOLTAGE	TOTAL PERCENT DROPPED
CKT 35LCP1 - ALV to EMH 08033	2400	1	2400.0	100%	6850.0	8.3	4	1	6	Y	Y	C	35.3	1.47%	N		2364.7	1.47%
EMH 08033 to XFMR T-2 (2.4kV)	2400	1	2364.7	100%	2050.0	4.2	6	1	10	Y	Y	C	8.4	0.35%	Y	35LCP1 - ALV to EMH 08	2356.3	1.82%
XFMR T-2 to MPZ-2 (480V)	480	1	480.0	100%	10.0	10.4	10	1	10	N	Y	C	0.2	0.05%	N		479.8	0.05%
MPZ-2 to RPU SOUTH (120V)	120	1	120.0	100%	25.0	10.0	12	1	12	Y	Y	C	1.0	0.83%	N		119.0	0.83%
EMH 08033 to XFMR T-1 (2.4 kV)	2400	1	2364.7	100%	5270.0	4.2	6	1	10	Y	Y	C	21.7	0.90%	Y	35LCP1 - ALV to EMH 08	2343.1	2.37%
XFMR "T-1" to "MPZ-1" (480V)	480	1	480.0	100%	10.0	10.4	12	1	12	N	Y	C	0.4	0.09%	N		479.6	0.09%
"MPZ-1" to I/O SOUTH (120V)	120	1	120.0	100%	25.0	10.0	12	1	12	Y	Y	C	1.0	0.83%	N		119.0	0.83%
"MPZ-1" to"CCTV#1" (120V)	120	1	120.0	100%	40.0	2.0	12	1	12	Y	Y	C	0.3	0.27%	N		119.7	0.27%
CKT 35LCP2 to EMH 08006A(2.4 kV)	2400	1	2400.0	100%	1710.0	8.3	6	1	10	Y	Y	C	13.9	0.58%	N		2386.1	0.58%
EMH 08006A to XFMR T-3 (2.4 kV)	2400	1	2386.1	100%	2325.0	4.2	6	1	10	Y	Y	C	9.6	0.40%	Y	5LCP2 to EMH 08006A(2	2376.5	0.98%
XFMR T-3 to MPZ-3 (480V)	480	1	480.0	100%	10.0	10.4	10	1	10	N	Y	C	0.2	0.05%	N		479.8	0.05%
MPZ-3 to RPU SOUTH (120V)	120	1	120.0	100%	25.0	10.0	12	1	12	Y	Y	C	1.0	0.83%	N		119.0	0.83%
EMH 008006A to XFMR T-4 (2.4kV)	2400	1	2386.1	100%	2040.0	4.2	6	1	10	Y	Y	C	8.4	0.35%	Y	5LCP2 to EMH 08006A(2	2377.7	0.93%
XFMR "T-4" to "MPZ-4" (480V)	480	1	480.0	100%	10.0	10.4	10	1	10	N	Y	C	0.2	0.05%	N		479.8	0.05%
"MPZ-4" to I/O SOUTH (120V)	120	1	120.0	100%	40.0	10.0	12	1	12	Y	Y	C	1.6	1.33%	N		118.4	1.33%
"MPZ-4" to CCTV#2 (120V)	120	1	120.0	100%	25.0	2.0	12	1	12	Y	Y	C	0.2	0.17%	N		119.8	0.17%

1 / – 35LCP1 & 35LCP2 – VOLTAGE DROP
NOT TO SCALE

COLORADO LICENSED
DORON LEA
52246
2/15/19
PROFESSIONAL ENGINEER

CITY & COUNTY of DENVER
DENVER INTERNATIONAL AIRPORT

LEAN ENGINEERING

RUNWAY 17R-35L COMPLEX PAVEMENT REHABILITATION PACKAGE 1

ISSUE RECORD

NO.	BY	PURPOSE	DATE	CKD
1	LE	50% DESIGN	09/14/18	DL
2	LE	90% DESIGN	10/26/18	DL
3	LE	BID	12/26/18	DL
4	LE	CONSTRUCTION	2/15/19	DL

SCALE: AS INDICATED
DATE: FEBRUARY 15, 2019
DRAWN BY: KV
CHECKED BY: JA
FAA AIP NO:
WORK BREAKDOWN NO.
DESIGN CONTRACT NO. 201735882
CONST. CONTRACT NO. 201846271
VOLUME NO.
SHEET TITLE: 35LCP1 & 35LCP2 VOLTAGE DROP
SHEET NO. EL759
297 OF 396
CADD FILE NO. _201735882-B1EELD-6289

D:\dropbox (lean photometrics)\active projects\157180 ra den 17r-35l reconstruction\01 drawings\working drawings\Sheets_201735882-B1EELD-6289.dwg Feb 12, 2019 - 5:24pm Kat

LEGEND:

- XX — TAXIWAY/RUNWAY DESIGNATION
- TAXIWAY/RUNWAY CENTERLINE
- (N) CABLE AS NOTED
- (E) ELECTRICAL MANHOLE
- (N) ELECTRICAL MANHOLE
- (N) SPLICE
- (N) TAP SPLICE

START	END	APPROXIMATE DISTANCES
EAST VAULT	EMH–08006A	1710'
EMH–08006A	EMH–08026	2575'
EMH–08026	EMH–08033	2575'
EMH–08033	RPU SOUTH	2050'
EMH–08033	EMH–08046	2815'
EMH–08046	SOUTH R I/O	2455'

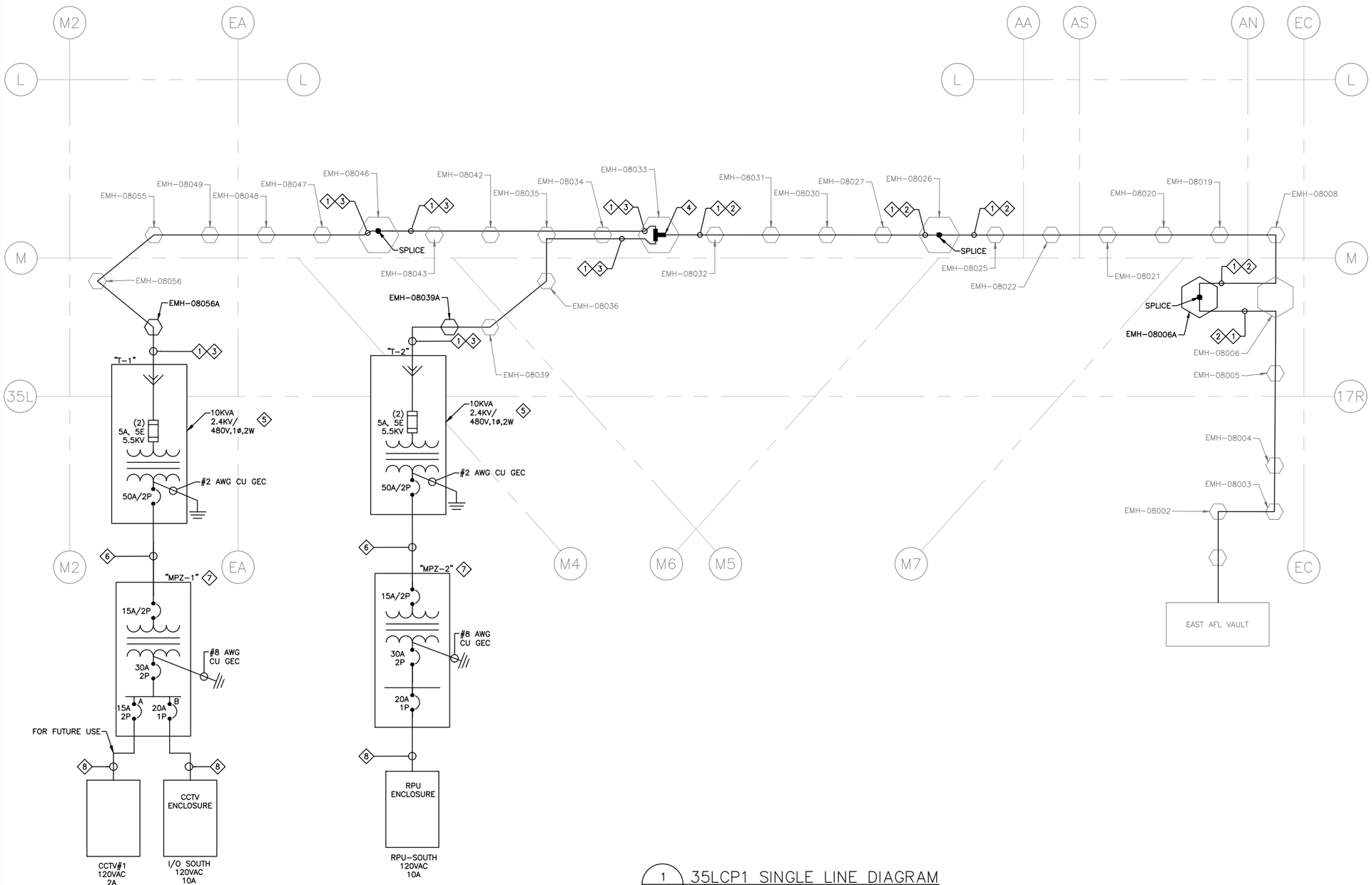

1 — 35LCP1 SINGLE LINE DIAGRAM
NOT TO SCALE

NOTES:

1. SEE SHEETS E–001 FOR GENERAL ELECTRICAL NOTES.

KEY NOTES:

1. 2.4KV CIRCUIT INDICATED IS CONNECTED TO 15 KVA DRY–TYPE TRANSFORMER XT–1 IN EXISTING AIRFIELD LIGHTING VAULT, AVL.
2. NEW (2) – 1/C #4AWG, CU, SHLD, EPR, MV105, 5 KV IN EXISTING CONDUIT. SHIELDING SHALL BE GROUNDED AT EACH SPLICE. DO NOT EXCEED MAXIMUM PULLING TENSION RECOMMENDED BY THE CABLE MANUFACTURER, OKONITE OR EQUAL. PROVIDE 2"C., WHERE THERE IS NO EXISTING CONDUIT COMPLETE WITH TRENCH/BACKFILL/ENCASEMENT AND #2AWG, BARE CU, COUNTERPOISE GROUND CONDUCTOR.
3. NEW (2) – 1/C #6AWG, CU, SHLD, EPR, MV105, 5 KV IN EXISTING CONDUIT. SHIELDING SHALL BE GROUNDED AT EACH SPLICE. DO NOT EXCEED MAXIMUM PULLING TENSION RECOMMENDED BY THE CABLE MANUFACTURER, OKONITE OR EQUAL. PROVIDE 2"C., WHERE THERE IS NO EXISTING CONDUIT COMPLETE WITH TRENCH/BACKFILL/ENCASEMENT AND #2AWG, BARE CU, COUNTERPOISE GROUND CONDUCTOR.
4. NEW (2) – 1/C 5KV "T" OR "Y" SPLICES IN NEW EMH, TO PROVIDE CIRCUIT TAP FOR 2,400 VOLT CIRCUIT. SPLICES TO BE 3–M, OR EQUIVALENT.
5. NEW 10 KVA, SEED OIL–FILLED (FR3), 2,400 VOLT, SINGLE PHASE (L–L) TO 240/480 VOLT, 1 PHASE, 3 WIRE, PADMOUNTED TRANSFORMER WITH PRIMARY BAY–O–NET FUSES AND SECONDARY CIRCUIT BREAKER COMPLETE WITH ALL ANSI/IEEE STANDARD ACCESSORIES, CONCRETE PAD, AND GROUNDING SYSTEM. TRANSFORMER SHALL BE AS MANUFCTURED BY COOPER, OR APPROVED EQUAL. FUSES SHALL BE AS INDICATED OR NEXT AVAILABLE STANDARD TRIP RATING. GROUNDING ELECTRODES SHALL CONSIST OF (2) – 3/4" DIA. X 10 '– 0" COPPER CLAD DRIVEN GROUND RODS CONNECTED WITH #3/0 STRANDED BARE COPPER CONDUCTORS. CONNECTIONS SHALL BE IRREVERSIBLE COMPRESSION TYPE. PROVIDE GROUND LUGS TO EQUIPMENT. PROVIDE GROUNDING ELECTRODE CONDUCTORS (GEC) AS INDICATED. PROVIDE 200A, 5KV, RATED, LOAD BREAK ELBOW CONNECTORS FOR EACH 5KV CABLE CONNECTION TO EACH TRANSFORMER. ELBOW CONNECTORS TO BE BY COOPER, OR EQUAL.
6. NEW (2) – 1/C #6AWG, CU, THWN–2, 600V. CONDUCTORS WITH 1/C #6AWG, CU, THWN–2, 600V. EQUIPMENT GROUNDING CONDUCTOR, IN 1.25" CONDUIT (MAX. SIZE).
7. NEW MINI–POWER ZONE FACTORY–ASSEMBLY CONSISTING OF 15A/2P MAIN CB, 5 KVA ENCAPSULATED TRANSFORMER, 480V. SINGLE–PHASE TO 120/240V, 1–PHASE, 3–WIRES, 15A, 2–POLE, PRIMARY CIRCUIT BREAKER, 30A, 2–POLE, SECONDARY MAIN CB, AND 15A. OR 20A., 1–POLE BRANCH BREAKERS, AS INDICATED. PROVIDE GROUNDING ELECTRODE CONDUCTOR INDICATED TO GROUNDIND ELECTRODE SYSTEM. ENCLOSURE SHALL BE NEMA 3R, MANUFACTURER'S STANDARD FINISH. INTERRUPTING RATING SHALL BE 18KA. PROVIDE RACK MOUNTING AS DETAILED. SQUARE–D #MPZB5S40F, OR APPROVED EQUAL.
8. NEW (2) – 1/C #12AWG (L–N), CU, THWN–2, 600V CONDUCTORS WITH 1/C #12AWG, CU, THWN–2, 600V. EQUIPMENT GROUNDING CONDUCTOR (EGC), IN 1" CONDUIT. PROVIDE TERMINATIONS TO EQUIPMENT INDICATED.

COLORADO LICENSED
DORON LEAN
52246
2/15/19
PROFESSIONAL ENGINEER

CITY & COUNTY of DENVER

DENVER INTERNATIONAL AIRPORT

LEAN ENGINEERING

RUNWAY 17R-35L COMPLEX PAVEMENT REHABILITATION PACKAGE 1

ISSUE RECORD

NO.	BY	PURPOSE	DATE	CKD
1	LE	50% DESIGN	09/14/18	DL
2	LE	90% DESIGN	10/26/18	DL
3	LE	BID	12/26/18	DL
4	LE	CONSTRUCTION	2/15/19	DL

SCALE: AS INDICATED

DATE: FEBRUARY 15, 2019

DRAWN BY: KV

CHECKED BY: JA

FAA AIP NO:

WORK BREAKDOWN NO.

DESIGN CONTRACT NO. 201735882

CONST. CONTRACT NO. 201846271

VOLUME NO.

SHEET TITLE

35LCP1 SINGLE LINE DIAGRAM

SHEET NO. EL757

CADD FILE NO. _201735882-B1EELD-6289

D:\dropbox (lean photometrics)\active projects\157180 ia rah den 17r-35l reconstruction\01 drawings\working drawings\Sheets_201735882-B1EELD-6289.dwg Feb 12, 2019 - 5:24pm Kat

LEGEND:

- XX — TAXIWAY/RUNWAY DESIGNATION
- TAXIWAY/RUNWAY CENTERLINE
- (N) CABLE AS NOTED
- (E) ELECTRICAL MANHOLE
- (N) ELECTRICAL MANHOLE
- (N) SPLICE
- (N) TAP SPLICE

START	END	APPROXIMATE DISTANCES
EAST VAULT	EMH–08006A	1710'
EMH–08006A	NORTH R I/O	2040'
EMH–08006A	RPU NORTH	2325'

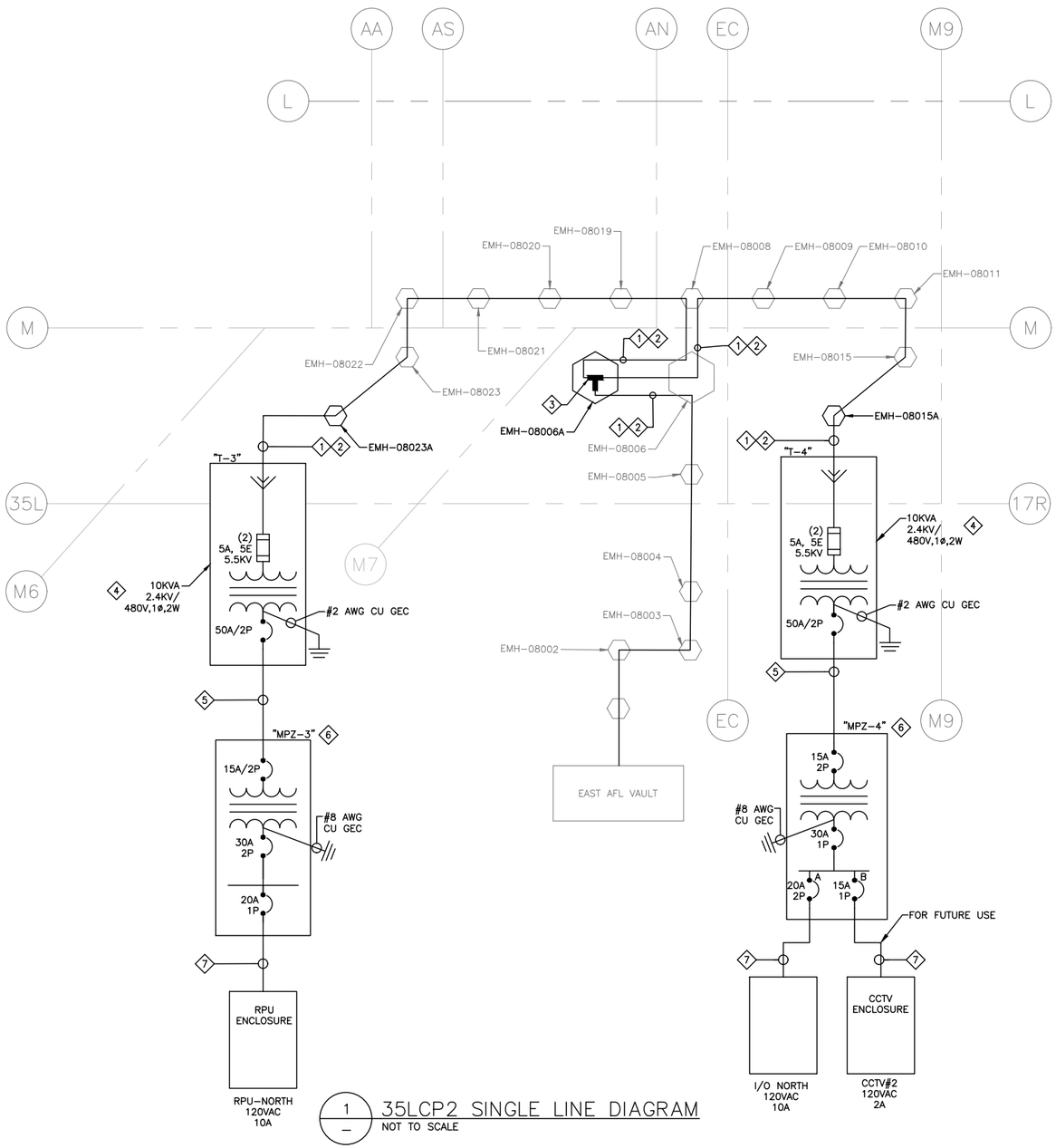

1 — 35LCP2 SINGLE LINE DIAGRAM
NOT TO SCALE

NOTES:

1. SEE SHEETS E–001 FOR GENERAL ELECTRICAL NOTES.

KEY NOTES:

1. 2.4KV CIRCUIT INDICATED IS CONNECTED TO 15 KVA DRY–TYPE TRANSFORMER XT–2 IN EXISTING AIRFIELD LIGHTING VAULT, AVL.
2. NEW (2) – 1/C #6AWG, CU, SHLD, EPR, MV105, 5 KV IN EXISTING CONDUIT. SHIELDING SHALL BE GROUNDED AT EACH SPLICE. DO NOT EXCEED MAXIMUM PULLING TENSION RECOMMENDED BY THE CABLE MANUFACTURER, OKONITE OR EQUAL. PROVIDE 2"C., WHERE THERE IS NO EXISTING CONDUIT COMPLETE WITH TRENCH/BACKFILL/ENCASEMENT AND #2AWG, BARE CU, COUNTERPOISE GROUND CONDUCTOR.
3. NEW (2) – 1/C 5KV "T" OR "Y" SPLICES IN NEW EMH, TO PROVIDE CIRCUIT TAP FOR 2,400 VOLT CIRCUIT. SPLICES TO BE 3–M, OR EQUIVALENT.
4. NEW 10 KVA, SEED OIL–FILLED (FR3), 2,400 VOLT, SINGLE PHASE (L–L) TO 240/480 VOLT, 1 PHASE, 3 WIRE, PADMOUNTED TRANSFORMER WITH PRIMARY BAY–O–NET FUSES AND SECONDARY CIRCUIT BREAKER COMPLETE WITH ALL ANSI/IEEE STANDARD ACCESSORIRES, CONCRETE PAD, AND GROUNDING SYSTEM. TRANSFORMER SHALL BE AS MANUFCTURED BY COOPER, OR APPROVED EQUAL. FUSES SHALL BE AS INDICATED OR NEXT AVAILABLE STANDARD TRIP RATING. GROUNDING ELECTRODES SHALL CONSIST OF (2) – 3/4" DIA. X 10 '– 0" COPPER CLAD DRIVEN GROUND RODS CONNECTED WITH #3/0 STRANDED BARE COPPER CONDUCTORS. CONNECTIONS SHALL BE IRREVERSIBLE COMPRESSION TYPE. PROVIDE GROUND LUGS TO EQUIPMENT. PROVIDE GROUNDING ELECTRODE CONDUCTORS (GEC) AS INDICATED. PROVIDE 200A, 5KV, RATED, LOAD BREAK ELBOW CONNECTORS FOR EACH 5KV CABLE CONNECTION TO EACH TRANSFORMER. ELBOW CONNECTORS TO BE BY COOPER, OR EQUAL.
5. NEW (2) – 1/C #6AWG, CU, THWN–2, 600V. CONDUCTORS WITH 1/C #6AWG, CU, THWN–2, 600V. EQUIPMENT GROUNDING CONDUCTOR, IN 1.25" CONDUIT (MAX. SIZE).
6. NEW MINI–POWER ZONE FACTORY–ASSEMBLY CONSISTING OF 15A/2P MAIN CB, 5 KVA ENCAPSULATED TRANSFORMER, 480V. SINGLE–PHASE TO 120/240V, 1–PHASE, 3–WIRES, 15A, 2–POLE, PRIMARY CIRCUIT BREAKER, 30A, 2–POLE, SECONDARY MAIN CB, AND 15A. OR 20A., 1–POLE BRANCH BREAKERS, AS INDICATED. PROVIDE GROUNDING ELECTRODE CONDUCTOR INDICATED TO GROUNDIND ELECTRODE SYSTEM. ENCLOSURE SHALL BE NEMA 3R, MANUFACTURER'S STANDARD FINISH. INTERRUPTING RATING SHALL BE 18KA. PROVIDE RACK MOUNTING AS DETAILED. SQUARE–D #MPZB5S40F, OR APPROVED EQUAL.
7. NEW (2) – 1/C #12AWG (L–N), CU, THWN–2, 600V CONDUCTORS WITH 1/C #12AWG, CU, THWN–2, 600V. EQUIPMENT GROUNDING CONDUCTOR (EGC), IN 1" CONDUIT. PROVIDE TERMINATIONS TO EQUIPMENT INDICATED.

COLORADO LICENSED
DORON LEAN
52246
2/15/19
PROFESSIONAL ENGINEER

CITY & COUNTY of DENVER

DENVER INTERNATIONAL AIRPORT

LEAN ENGINEERING

RUNWAY 17R-35L COMPLEX PAVEMENT REHABILITATION PACKAGE 1

ISSUE RECORD

NO.	BY	PURPOSE	DATE	CKD
1	LE	50% DESIGN	09/14/18	DL
2	LE	90% DESIGN	10/26/18	DL
3	LE	BID	12/26/18	DL
4	LE	CONSTRUCTION	2/15/19	DL

SCALE: AS INDICATED

DATE: FEBRUARY 15, 2019

DRAWN BY: KV

CHECKED BY: JA

FAA AIP NO:

WORK BREAKDOWN NO.

DESIGN CONTRACT NO. 201735882

CONST. CONTRACT NO. 201846271

VOLUME NO.

SHEET TITLE

35LCP2 SINGLE LINE DIAGRAM

SHEET NO. EL758

CADD FILE NO. _201735882-B1EELD-6289

D:\dropbox (lean photometrics)\active projects\1517180ia rah den 17r-35l reconstruction\01 drawings\working drawings\Sheets_201735882-B1EELD-6289.dwg Feb 12, 2019 - 5:24pm Kat

EAST VAULT LIGHTING EQUIPMENT AND CABLE SCHEDULE (CONT.)

EQUIPMENT IDENTIFIER	EQUIPMENT TYPE	EQUIPMENT NUMBER	REGULATOR		CIRCUIT DESCRIPTION	CIRCUIT NAME	CONDUCTORS REQUIRED	CONDUIT ROUTE	CABLE NUMBERS		CONTROL CABLE	CIRCUIT BKR EQUIPMENT NUMBER	CUTOUT EQUIPMENT NUMBER	AIRFIELD LIGHTING CIRCUIT MONITERING SYSTEM		COMMENTS
			SIZE	STEPS					L1	L2				CONTROL CABLE TO–	INSTRUMENT CABLE TO–	
CCR55	REGULATOR	08569	10	3	TW M CENTERLINE LIGHTS	TMC6	2–1/C #8 5kV	I	TMC6–1	TMC6–2	12/C #16 TYPE 1	08627	08703	12/C #16 TYPE 1		
CCR56	REGULATOR	08570	20	3	RAMP TW–L EDGE	TLC2	2–1/C #8 5kV	I	TLC2–1	TLC2–2	12/C #16 TYPE 1	08628	08704	12/C #16 TYPE 1		
CCR61	REGULATOR	08734	20	3	TW M CENTERLINE	TLC5	2–1/C #8 5kV	I	TLC5–1	TLC5–2	12/C #16 TYPE 1	08735	08735	12/C #16 TYPE 1		
CCR62	REGULATOR	08733	20	3	TW L CENTERLINE LIGHTS	TMC5	2–1/C #8 5kV	I	TMC5–1	TMC5–2	12/C #16 TYPE 1	08743	08743	12/C #16 TYPE 1		
CCR63	REGULATOR	08745	30		TW L CENTERLINE (NORTH OF T/W ZB)	TLC4	2–1/C #8 5kV	J	TLC4–1	TLC4–2	12/C #16 TYPE 1	08746	08746	12/C #16 TYPE 1		
CCR64	REGULATOR	08748	30		TW ZN CENTERLINE LIGHTS	TZNC1	2–1/C #8 5kV	I	TZNC1–1	TZNC1–2	12/C #16 TYPE 1	08749	08749	12/C #16 TYPE 1		
CCR65	REGULATOR	08995	20		TW EE CENTERLINE LIGHTS	TEEC1	2–1/C #8 5kV	K	TEEC1–1	TEEC1–2	12/C #16 TYPE 1	08996	08996	12/C #16 TYPE 1		
	SWITCHBOARD	08705														
EPBD–E1	BUSDUCT	08706														
EPBD–E2	BUSDUCT	08707														
EPBD–E3	BUSDUCT	08708														
EPBD–E4	BUSDUCT	08709														
ELP1	PANELBOARD	08710														
EPP1	PANELBOARD	08711														
EMCU1	MTR CTL UNIT	08712														
	GENERATOR	08713														
T3	TRANSFORMER	08714			CONTROL POWER 8/26	TRCP		K	TRCP–1	TRCP–2		08738				
T4	TRANSFORMER	08737			CONTROL POWER 35L	35LCP1		K	35LCP1–1	35LCP1–2		08740				NEW XFMR
T5	TRANSFORMER	08739			CONTROL POWER 17L/35R	TPCP		K	TPCP–1	TPCP–2		08742				
T6	TRANSFORMER	08741			CONTROL POWER 17R	35LCP2		K	35LCP2–1	35LCP2–2						NEW XFMR
CCR68	REGULATOR		30	3	RWY 17R/35L MDT SIGNS(5.5 AMPS)	17 RMDT	2–1/C #8 5kV		17 RMDT–1	17 RMDT–2	12/C #16 TYPE 1			12/C #16 TYPE 1		NEW CCR

NOTES:

1. SEE SHEETS E–001 FOR GENERAL ELECTRICAL NOTES.

NOTES:

1. STENCIL EQUIPMENT NUMBERS PROVIDED ON THIS SCHEDULE ON THE EQUIPMENT IN LETTERS NOT LESS THAN 1 INCH HIGH.
2. WIRING IN MANHOLES SHALL BE INSTALLED WITH ENOUGH SLACK TO ALLOW THE CABLES TO NEATLY ROUTE ON RACKING SYSTEM WITH TERMINATION ON UPPER RACKS AT WALL BETWEEN DUCT ENTRANCES. INCLUDE 2–FOOT DRIP LOOP AT EACH CORNER. EACH CIRCUIT (TWO WIRES) SHALL BE WRAPPED WITH NYLON TIES AT INTERVALS OF NO LESS THAN 24" APART FOR THE ENTIRE DISTANCE OF THE CABLE IN THE MANHOLE. CIRCUITS SHALL ALL BE SECURED TO THE RACKING IN THE MANHOLES WITH NYLON TIES. WIRING SHALL BE NEATLY TRAINED IN THE MANHOLES USING THE RACKING. CONTRACTOR SHALL ADD ADDITIONAL RACKING AS NEEDED AT NO ADDITIONAL COST TO THE CONTRACT IF REQUIRED TO PROVIDE A NEATLY TRAINED INSTALLATION OF THE CABLES. EACH CABLE SHALL BE SPLICED WITH A PROPERLY SIZED L–823 CONNECTOR AND WIRING SHALL BE LABELED WITH PROPER IDENTIFICATION TAGS ON EACH SIDE OF THE L–823 CONNECTOR AND AT EACH END OF THE RACKS ON EACH WALL THAT THE CONDUCTORS ARE SECURED THROUGH. ALL WIRING SHALL BE SECURED SUCH THAT IT DOES NOT HANG BELOW THE RACKING. ANY CONSTANT VOLTAGE CIRCUITS SHALL BE INSTALLED IN A SEPARATE CONDUIT FROM CONSTANT CURRENT CIRCUITS WHEN INSTALLED IN A DUCT BANK OR CONDUIT. IN MANHOLES THE CONSTANT VOLTAGE CIRCUITS SHALL BE SECURED TO RACKING AND SEPARATED FROM CONSTANT CURRENT CIRCUITS BY A MINIMUM OF 6" ON ALL SIDES.

COLORADO LICENSED
DIXON LEAN
52246
2/15/19
PROFESSIONAL ENGINEER

CITY & COUNTY of DENVER

DENVER INTERNATIONAL AIRPORT

LEAN ENGINEERING

RUNWAY 17R-35L COMPLEX PAVEMENT REHABILITATION PACKAGE 1

ISSUE RECORD

NO.	BY	PURPOSE	DATE	CKD
1	LE	50% DESIGN	09/14/18	DL
2	LE	90% DESIGN	10/26/18	DL
3	LE	BID	12/26/18	DL
4	LE	CONSTRUCTION	2/15/19	DL

SCALE: AS INDICATED

DATE: FEBRUARY 15, 2019

DRAWN BY: KV

CHECKED BY: JA

FAA AIP NO:

WORK BREAKDOWN NO.

DESIGN CONTRACT NO. 201735882

CONST. CONTRACT NO. 201846271

VOLUME NO.

SHEET TITLE

17R35L CCR SCHEDULE

SHEET NO. EL754

CADD FILE NO. _201735882-B1EELD-6289

D:\dropbox (lean photometrics)\active projects\1571801a rwy den 17r-35l reconstruction\01 drawings\working drawings\Sheets_201735882-B1EELD-6289.dwg Feb 12, 2019 - 5:24pm Kat

NOTES:

1. SEE SHEETS E-001 FOR GENERAL ELECTRICAL NOTES.

CABLE LEGEND

- DENOTES NEW CABLE WITH 2-1/C
- DENOTES NEW CABLE WITH 1-1/C
- DENOTES EXISTING CABLE WITH 2-1/C
- DENOTES EXISTING CABLE WITH 1-1/C

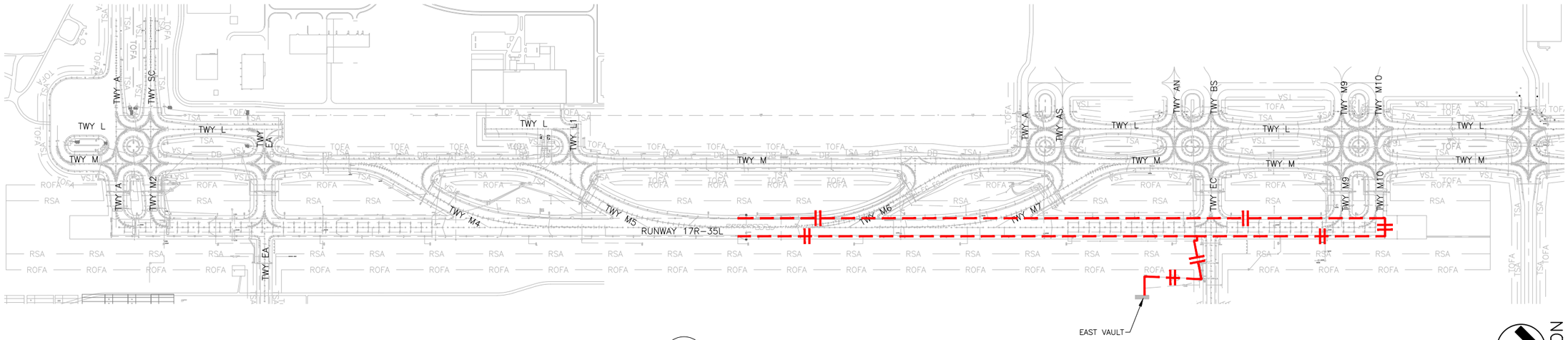

1 CIRCUIT 17RE – EXISTING
NOT TO SCALE

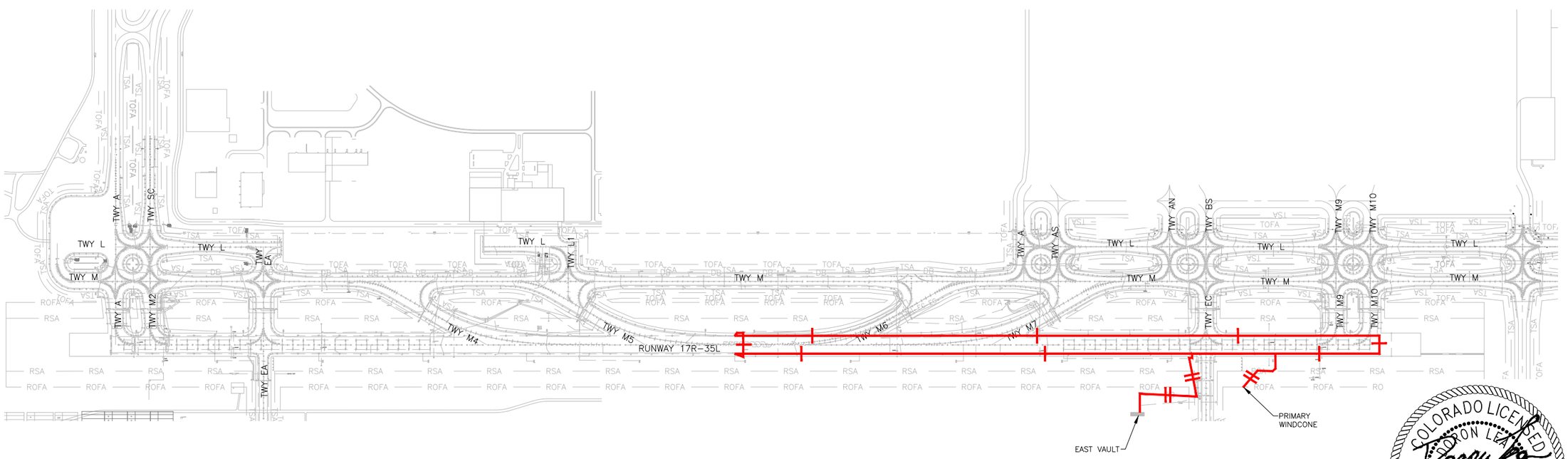

2 CIRCUIT 17RE – NEW
NOT TO SCALE

COLORADO LICENSED
AARON LEA
52246
2/15/19
PROFESSIONAL ENGINEER

CITY & COUNTY of DENVER

DENVER INTERNATIONAL AIRPORT

LEAN ENGINEERING

RUNWAY 17R-35L COMPLEX PAVEMENT REHABILITATION PACKAGE 1

ISSUE RECORD

NO.	BY	PURPOSE	DATE	CKD
1	LE	50% DESIGN	09/14/18	DL
2	LE	90% DESIGN	10/26/18	DL
3	LE	BID	12/26/18	DL
4	LE	CONSTRUCTION	2/15/19	DL

SCALE: AS INDICATED

DATE: FEBRUARY 15, 2019

DRAWN BY: KV

CHECKED BY: JA

FAA AIP NO:

WORK BREAKDOWN NO.

DESIGN CONTRACT NO. 201735882

CONST. CONTRACT NO. 201846271

VOLUME NO.

SHEET TITLE

CIRCUIT MAP
CIRCUIT 17RE

SHEET NO. EL801
301 OF 396

CADD FILE NO. _201735882-B1EELD-4298

Feb 12, 2019 – 5:24pm Kat

D:\dropbox (lean photometrics)\active projects\1571801a rah den 17r-35l reconstruction\01 drawings\working drawings\Sheets_201735882-B1EELD-4298.dwg

NOTES:

1. SEE SHEETS E-001 FOR GENERAL ELECTRICAL NOTES.

CABLE LEGEND

- DENOTES NEW CABLE WITH 2-1/C
- DENOTES NEW CABLE WITH 1-1/C
- DENOTES EXISTING CABLE WITH 2-1/C
- DENOTES EXISTING CABLE WITH 1-1/C
- DENOTES CONNECTION FROM EXISTING CABLE TO NEW CABLE

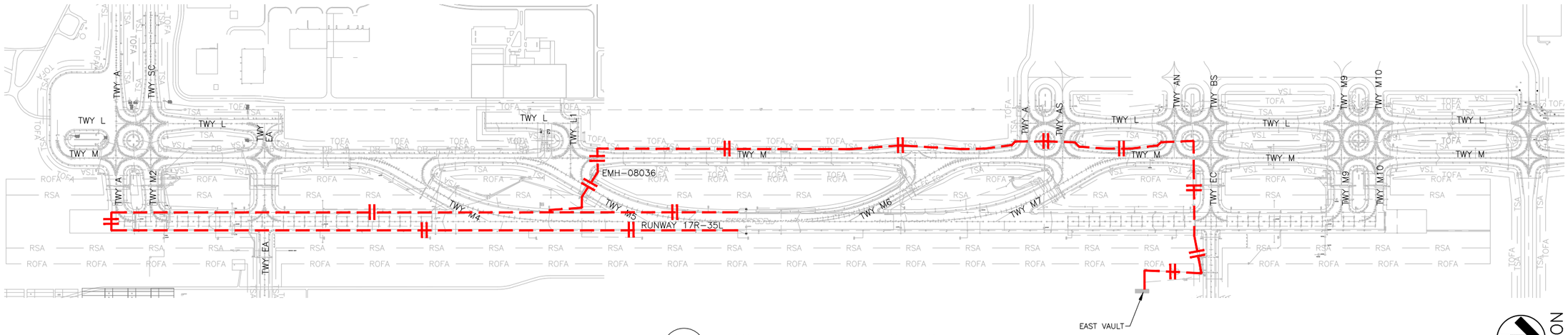

1 CIRCUIT 35LE – EXISTING
NOT TO SCALE

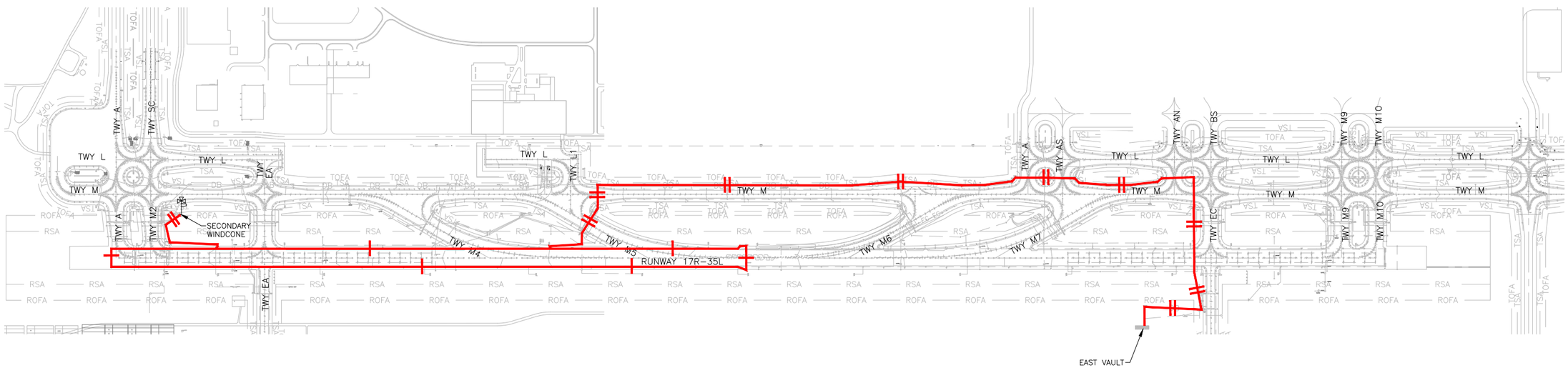

2 CIRCUIT 35LE – NEW
NOT TO SCALE

COLORADO LICENSED
DIXON LEAN
52246
2/15/19
PROFESSIONAL ENGINEER

CITY & COUNTY of DENVER

DENVER INTERNATIONAL AIRPORT

LEAN ENGINEERING

RUNWAY 17R-35L COMPLEX PAVEMENT REHABILITATION PACKAGE 1

ISSUE RECORD

NO.	BY	PURPOSE	DATE	CKD
1	LE	50% DESIGN	09/14/18	DL
2	LE	90% DESIGN	10/26/18	DL
3	LE	BID	12/26/18	DL
4	LE	CONSTRUCTION	2/15/19	DL

SCALE: AS INDICATED

DATE: FEBRUARY 15, 2019

DRAWN BY: KV

CHECKED BY: JA

FAA AIP NO:

WORK BREAKDOWN NO.

DESIGN CONTRACT NO. 201735882

CONST. CONTRACT NO. 201846271

VOLUME NO.

SHEET TITLE

CIRCUIT MAP
CIRCUIT 35LE

SHEET NO. EL802

CADD FILE NO. _201735882-B1EELD-4298

D:\dropbox (lean photometrics)\active projects\1157180ia rwy den 17r-35l reconstruction\01 drawings\working drawings\Sheets_201735882-B1EELD-4298.dwg Feb 12, 2019 - 5:25pm Kat

NOTES:

1. SEE SHEETS E-001 FOR GENERAL ELECTRICAL NOTES.

CABLE LEGEND

- DENOTES NEW CABLE WITH 2-1/C
- DENOTES NEW CABLE WITH 1-1/C
- DENOTES EXISTING CABLE WITH 2-1/C
- DENOTES EXISTING CABLE WITH 1-1/C
- DENOTES CONNECTION FROM EXISTING CABLE TO NEW CABLE

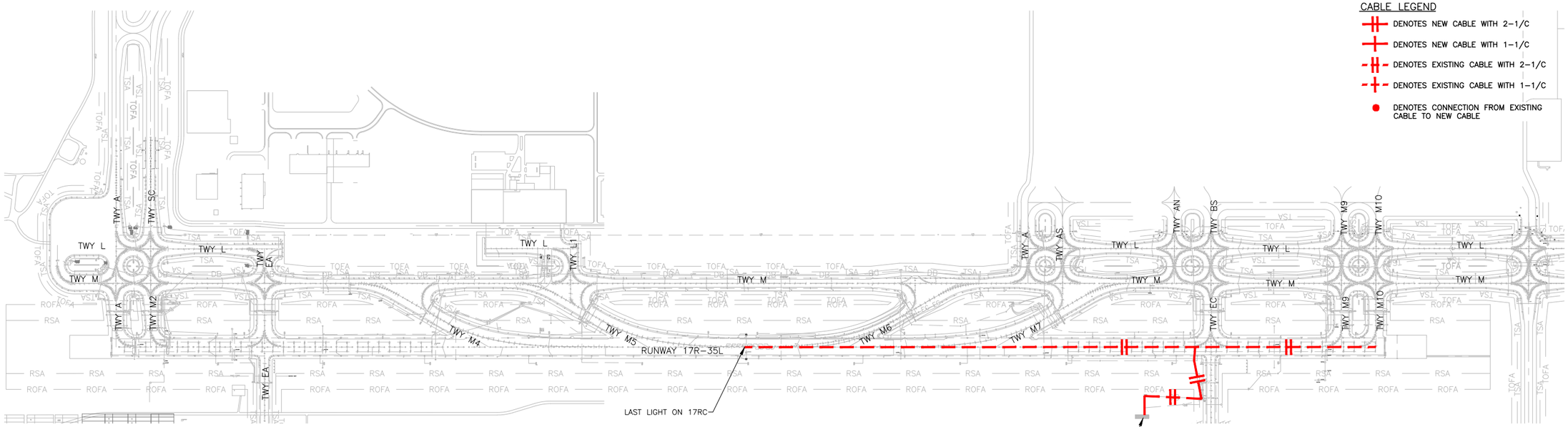

1 / – CIRCUIT 17RC – EXISTING
NOT TO SCALE

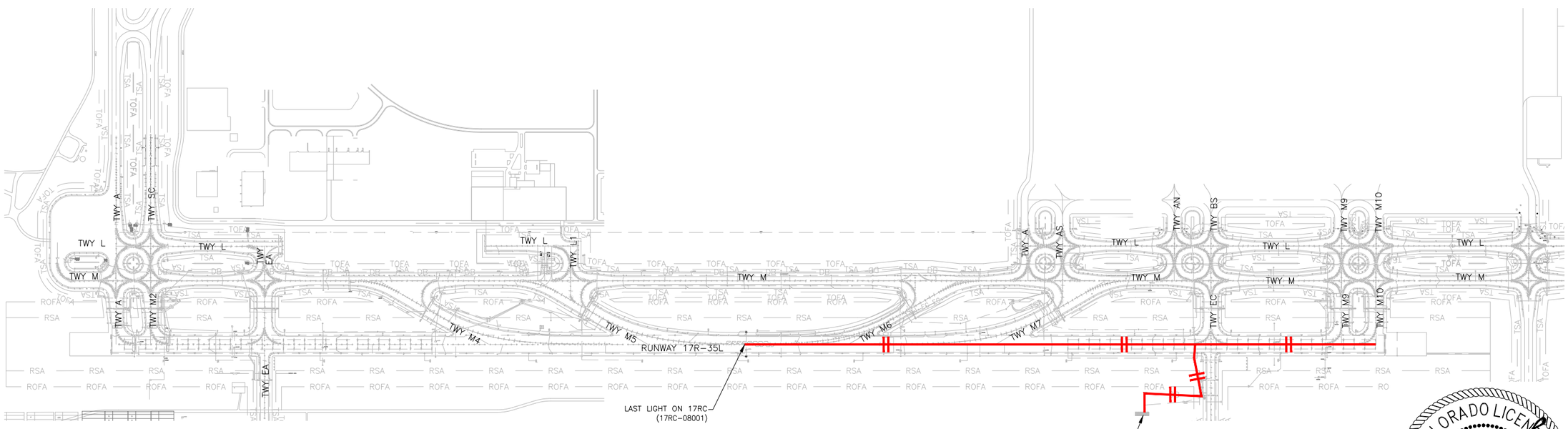

1 / – CIRCUIT 17RC – NEW
NOT TO SCALE

COLORADO LICENSED
DARON LEA
52246
2/15/19
PROFESSIONAL ENGINEER

CITY & COUNTY of DENVER

DENVER INTERNATIONAL AIRPORT

LEAN ENGINEERING

RUNWAY 17R-35L COMPLEX PAVEMENT REHABILITATION PACKAGE 1

ISSUE RECORD

NO.	BY	PURPOSE	DATE	CKD
1	LE	50% DESIGN	09/14/18	DL
2	LE	90% DESIGN	10/26/18	DL
3	LE	BID	12/26/18	DL
4	LE	CONSTRUCTION	2/15/19	DL

SCALE: AS INDICATED

DATE: FEBRUARY 15, 2019

DRAWN BY: KV

CHECKED BY: JA

FAA AIP NO:

WORK BREAKDOWN NO.

DESIGN CONTRACT NO. 201735882

CONST. CONTRACT NO. 201846271

VOLUME NO.

SHEET TITLE

CIRCUIT MAP
CIRCUIT 17RC

SHEET NO. EL803
303 OF 396

CADD FILE NO. _201735882-B1EELD-4298

D:\dropbox (lean photometrics)\active projects\1571801a rah den 17r-35l reconstruction\01 drawings\working drawings\sheets_201735882-B1EELD-4298.dwg Feb 12, 2019 - 5:25pm Kat

NOTES:

1. SEE SHEETS E-001 FOR GENERAL ELECTRICAL NOTES.

CABLE LEGEND

- DENOTES NEW CABLE WITH 2-1/C
- DENOTES NEW CABLE WITH 1-1/C
- DENOTES EXISTING CABLE WITH 2-1/C
- DENOTES EXISTING CABLE WITH 1-1/C
- DENOTES CONNECTION FROM EXISTING CABLE TO NEW CABLE

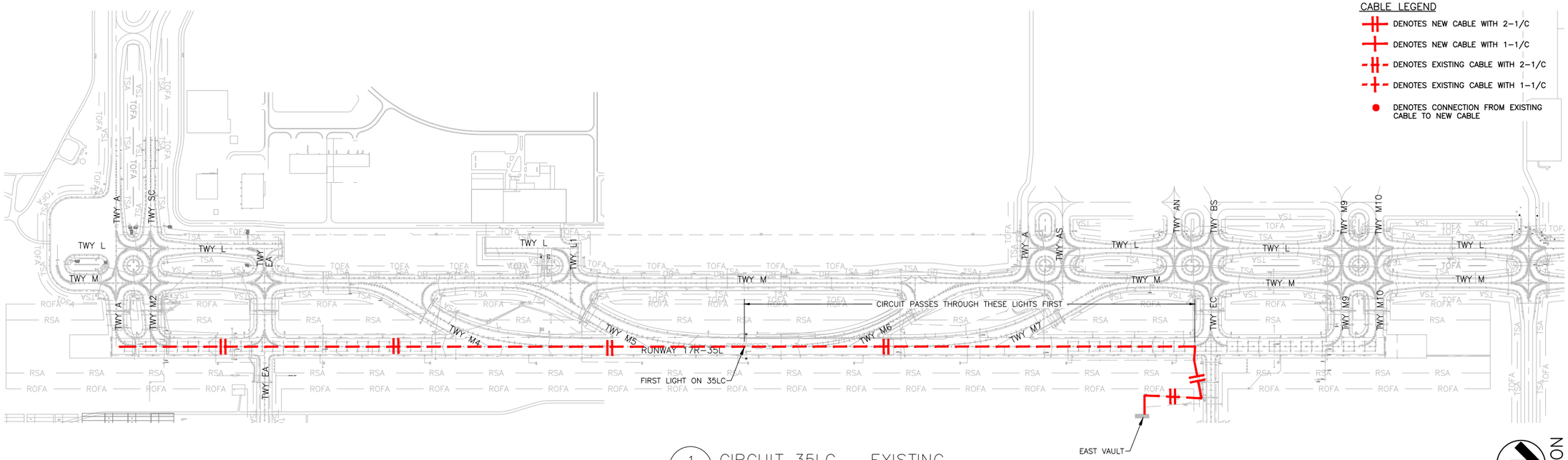

1 / – CIRCUIT 35LC – EXISTING
NOT TO SCALE

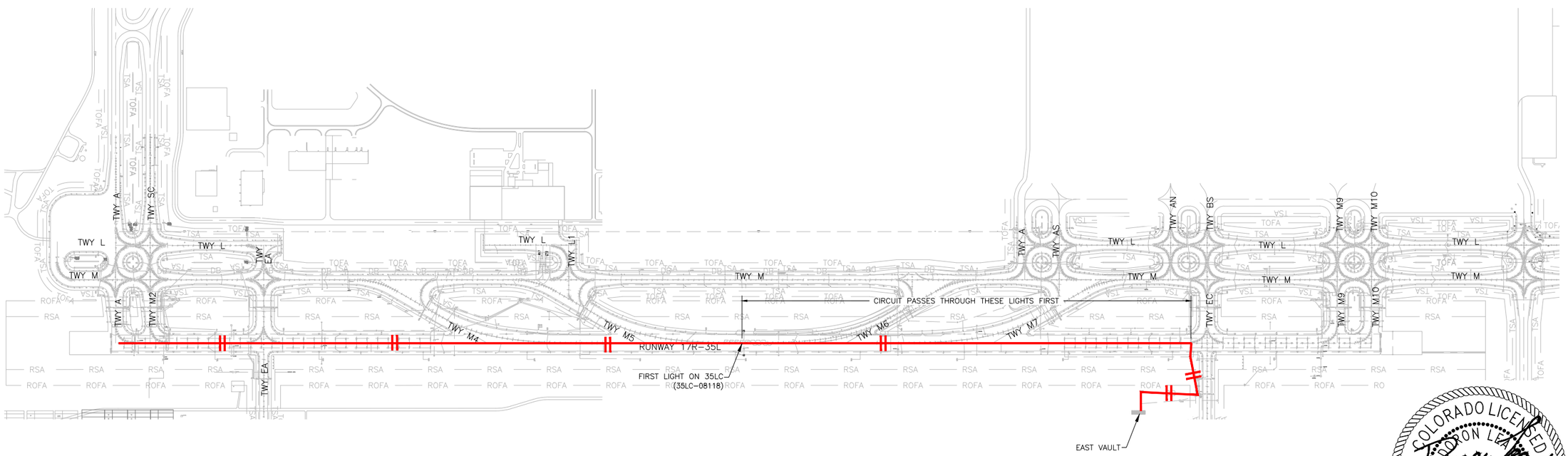

NOTES:

1. 35LC MUST BE REPLACED IN ITS ENTIRETY.

1 / – CIRCUIT 35LC – NEW
NOT TO SCALE

COLORADO LICENSED
AARON LEA
52246
2/15/19
PROFESSIONAL ENGINEER

CITY & COUNTY of DENVER

DENVER INTERNATIONAL AIRPORT

LEAN ENGINEERING

RUNWAY 17R-35L COMPLEX PAVEMENT REHABILITATION PACKAGE 1

ISSUE RECORD

NO.	BY	PURPOSE	DATE	CKD
1	LE	50% DESIGN	09/14/18	DL
2	LE	90% DESIGN	10/26/18	DL
3	LE	BID	12/26/18	DL
4	LE	CONSTRUCTION	2/15/19	DL

SCALE: AS INDICATED

DATE: FEBRUARY 15, 2019

DRAWN BY: KV

CHECKED BY: JA

FAA AIP NO:

WORK BREAKDOWN NO.

DESIGN CONTRACT NO. 201735882

CONST. CONTRACT NO. 201846271

VOLUME NO.

SHEET TITLE

CIRCUIT MAP
CIRCUIT 35LC

SHEET NO. EL804
304 OF 396

CADD FILE NO. _201735882-B1EELD-4298

Feb 12, 2019 – 5:25pm Kat

D:\dropbox (lean photometrics)\active projects\1571801a rah den 17r-35l reconstruction\01 drawings\working drawings\Sheets_201735882-B1EELD-4298.dwg

NOTES:

1. SEE SHEETS E-001 FOR GENERAL ELECTRICAL NOTES.

CABLE LEGEND

- DENOTES NEW CABLE WITH 2-1/C
- DENOTES NEW CABLE WITH 1-1/C
- DENOTES EXISTING CABLE WITH 2-1/C
- DENOTES EXISTING CABLE WITH 1-1/C

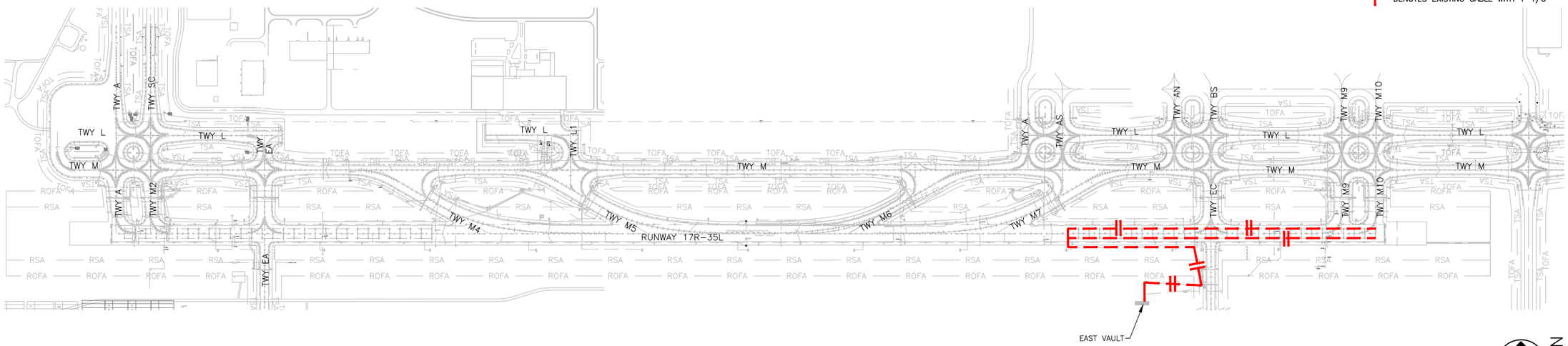

1 CIRCUIT 17RTDZ – EXISTING
NOT TO SCALE

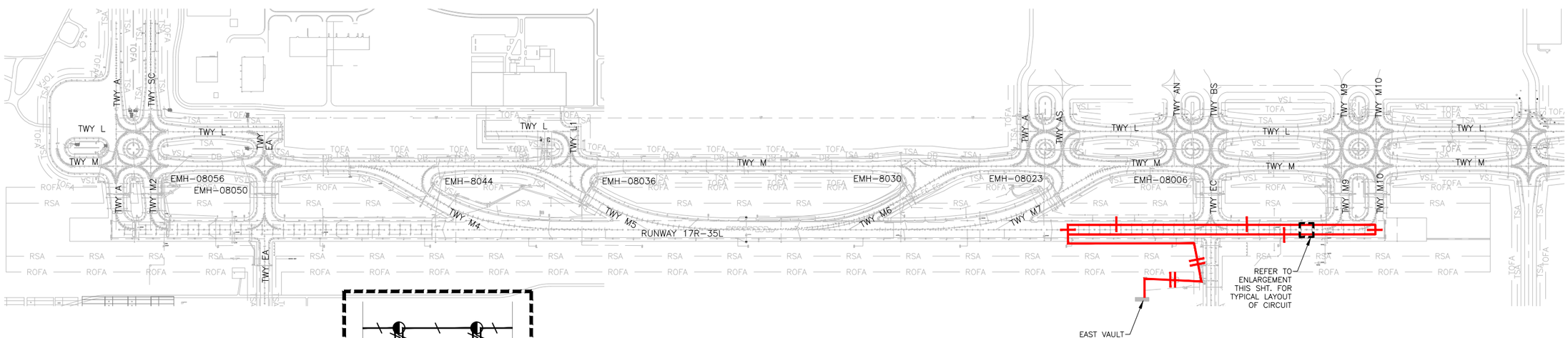

2 CIRCUIT 17RTDZ – NEW
NOT TO SCALE

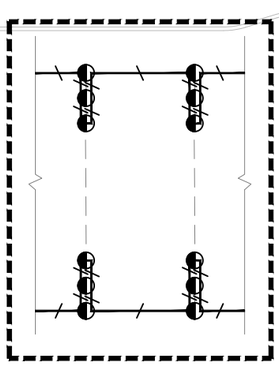

TDZ LAYOUT (TYP)

COLORADO LICENSED
DIXON LEAN
52246
2/15/19
PROFESSIONAL ENGINEER

CITY & COUNTY of DENVER

DENVER INTERNATIONAL AIRPORT

LEAN ENGINEERING

RUNWAY 17R-35L COMPLEX PAVEMENT REHABILITATION PACKAGE 1

ISSUE RECORD

NO.	BY	PURPOSE	DATE	CKD
1	LE	50% DESIGN	09/14/18	DL
2	LE	90% DESIGN	10/26/18	DL
3	LE	BID	12/26/18	DL
4	LE	CONSTRUCTION	2/15/19	DL

SCALE: AS INDICATED

DATE: FEBRUARY 15, 2019

DRAWN BY: KV

CHECKED BY: JA

FAA AIP NO:

WORK BREAKDOWN NO.

DESIGN CONTRACT NO. 201735882

CONST. CONTRACT NO. 201846271

VOLUME NO.

SHEET TITLE

CIRCUIT MAP
CIRCUIT 17RTD□

SHEET NO. EL805
305 OF 396

CADD FILE NO. _201735882-B1EELD-4298

D:\dropbox (lean photometrics)\active projects\1571801a rwy den 17r-35l reconstruction\01 drawings\working drawings\Sheets_201735882-B1EELD-4298.dwg Feb 12, 2019 - 5:26pm Kat

NOTES:

1. SEE SHEETS E-001 FOR GENERAL ELECTRICAL NOTES.

CABLE LEGEND

- DENOTES NEW CABLE WITH 2-1/C
- DENOTES NEW CABLE WITH 1-1/C
- DENOTES EXISTING CABLE WITH 2-1/C
- DENOTES EXISTING CABLE WITH 1-1/C

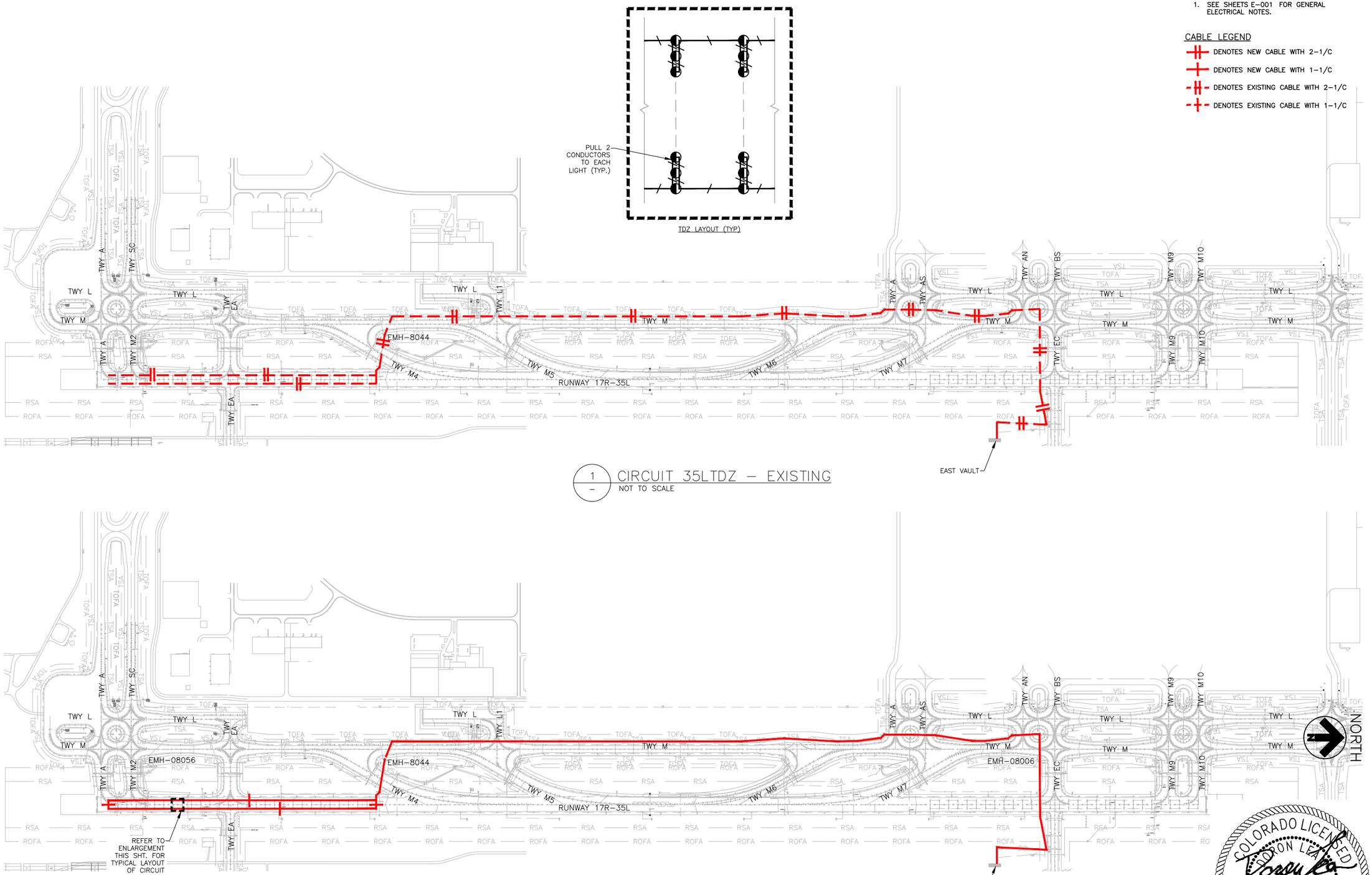

1 – CIRCUIT 35LTDZ – EXISTING
NOT TO SCALE

1 – CIRCUIT 35LTDZ – NEW
NOT TO SCALE

COLORADO LICENSED
DARON LEA
52246
2/15/19
PROFESSIONAL ENGINEER

CITY & COUNTY of DENVER

DENVER INTERNATIONAL AIRPORT

LEAN ENGINEERING

RUNWAY 17R-35L COMPLEX PAVEMENT REHABILITATION PACKAGE 1

ISSUE RECORD

NO.	BY	PURPOSE	DATE	CKD
1	LE	50% DESIGN	09/14/18	DL
2	LE	90% DESIGN	10/26/18	DL
3	LE	BID	12/26/18	DL
4	LE	CONSTRUCTION	2/15/19	DL

SCALE: AS INDICATED

DATE: FEBRUARY 15, 2019

DRAWN BY: KV

CHECKED BY: JA

FAA AIP NO:

WORK BREAKDOWN NO.

DESIGN CONTRACT NO. 201735882

CONST. CONTRACT NO. 201846271

VOLUME NO.

SHEET TITLE

CIRCUIT MAP CIRCUIT 35LTD□

SHEET NO. EL806

306 OF 396

CADD FILE NO. _201735882-B1EELD-4298

Feb 12, 2019 – 5:26pm Kat

D:\dropbox (lean photometrics)\active projects\15718010 rah den 17r-35l reconstruction\01 drawings\working drawings\Sheets_201735882-B1EELD-4298.dwg

NOTES:

1. SEE SHEETS E-001 FOR GENERAL ELECTRICAL NOTES.

CABLE LEGEND

- DENOTES NEW CABLE WITH 2-1/C
- DENOTES NEW CABLE WITH 1-1/C
- DENOTES EXISTING CABLE WITH 2-1/C
- DENOTES EXISTING CABLE WITH 1-1/C

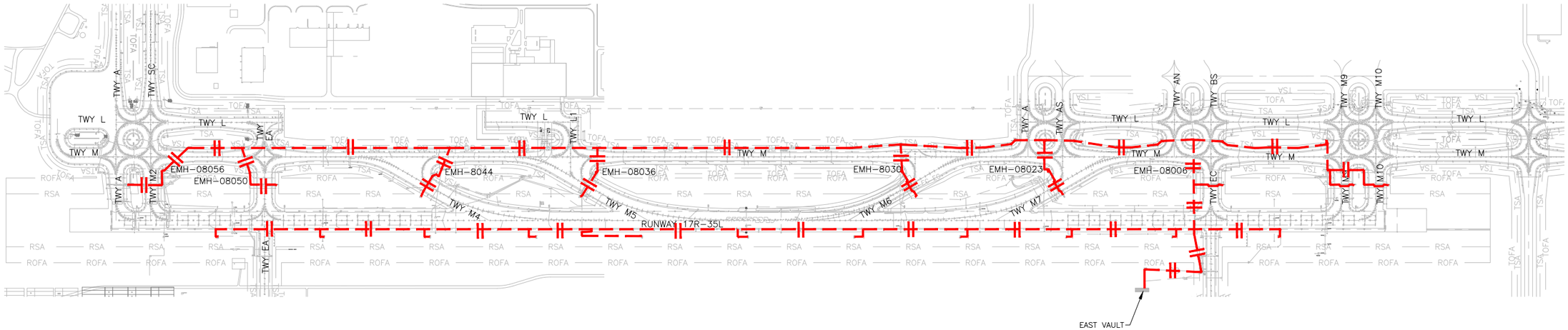

1 – CIRCUIT 17RRDR – EXISTING
NOT TO SCALE

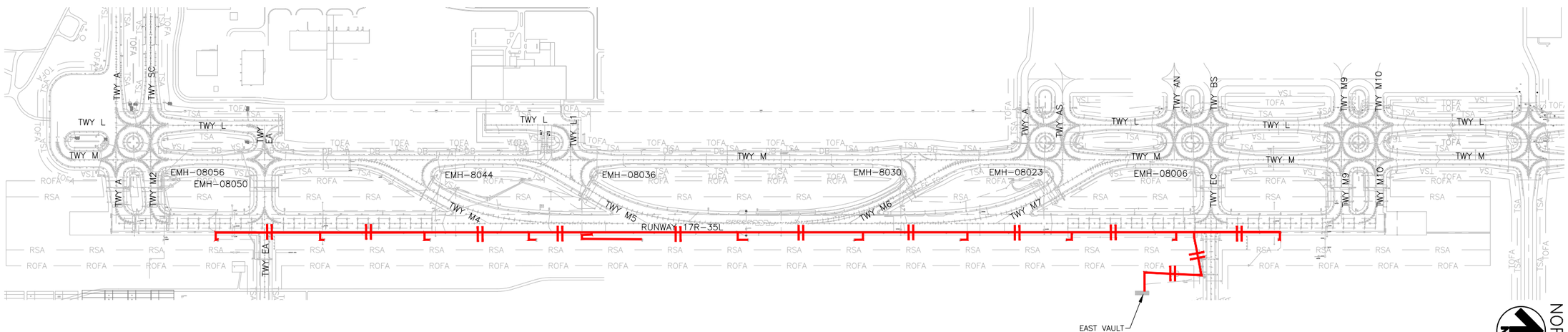

2 – CIRCUIT 17RRDR – NEW
NOT TO SCALE

CITY & COUNTY of DENVER

DENVER INTERNATIONAL AIRPORT

LEAN ENGINEERING

RUNWAY 17R-35L COMPLEX PAVEMENT REHABILITATION PACKAGE 1

ISSUE RECORD

NO.	BY	PURPOSE	DATE	CKD
1	LE	50% DESIGN	09/14/18	DL
2	LE	90% DESIGN	10/26/18	DL
3	LE	BID	12/26/18	DL
4	LE	CONSTRUCTION	2/15/19	DL

SCALE: AS INDICATED

DATE: FEBRUARY 15, 2019

DRAWN BY: KV

CHECKED BY: JA

FAA AIP NO:

WORK BREAKDOWN NO.

DESIGN CONTRACT NO. 201735882

CONST. CONTRACT NO. 201846271

VOLUME NO.

SHEET TITLE: CIRCUIT MAP CIRCUIT 17RRDR

SHEET NO. EL807

CADD FILE NO. _201735882-B1EELD-4298

COLORADO LICENSED PROFESSIONAL ENGINEER DIXON LEAN 52246 2/15/19

D:\dropbox (lean photometrics)\active projects\1157180ia rah den 17r-35l reconstruction\01 drawings\working drawings\Sheets_201735882-B1EELD-4298.dwg Feb 12, 2019 - 5:26pm Kat

NOTES:

1. SEE SHEETS E-001 FOR GENERAL ELECTRICAL NOTES.

CABLE LEGEND

DENOTES NEW CABLE WITH 2-1/C

DENOTES NEW CABLE WITH 1-1/C

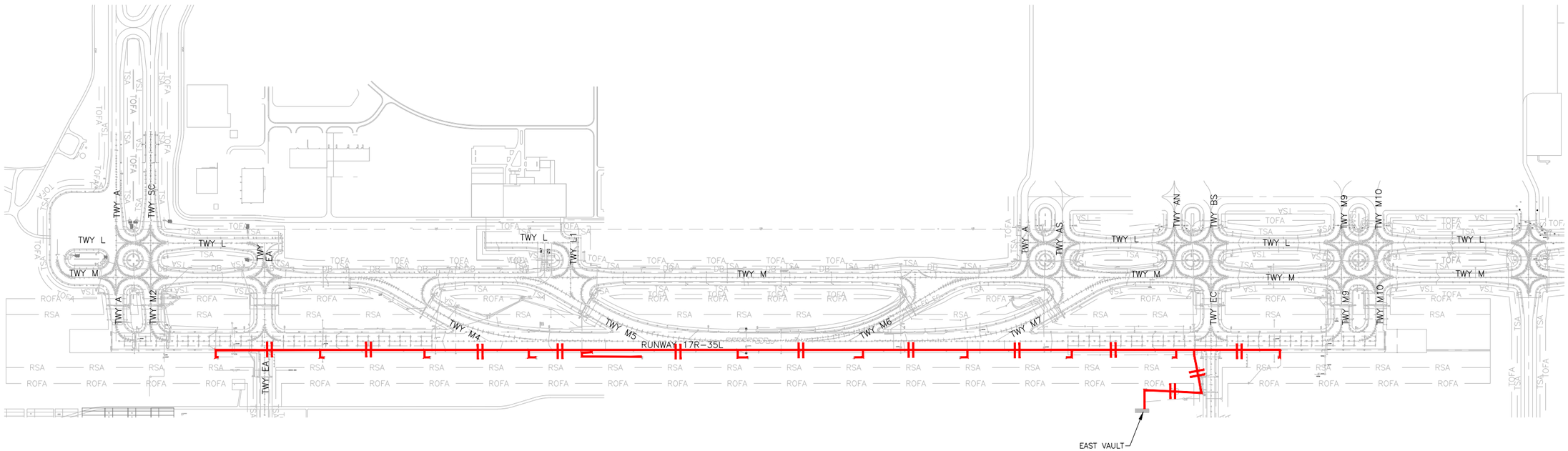

1 / – CIRCUIT 17RRDR – NEW

NOT TO SCALE

NORTH

COLORADO LICENSED
DORON LEA
52246
2/15/19
PROFESSIONAL ENGINEER

CITY & COUNTY of DENVER

DENVER INTERNATIONAL AIRPORT

LEAN ENGINEERING

RUNWAY 17R-35L COMPLEX PAVEMENT REHABILITATION PACKAGE 1

ISSUE RECORD

NO.	BY	PURPOSE	DATE	CKD
1	LE	50% DESIGN	09/14/18	DL
2	LE	90% DESIGN	10/26/18	DL
3	LE	BID	12/26/18	DL
4	LE	CONSTRUCTION	2/15/19	DL

SCALE: AS INDICATED

DATE: FEBRUARY 15, 2019

DRAWN BY: KV

CHECKED BY: JA

FAA AIP NO:

WORK BREAKDOWN NO.

DESIGN CONTRACT NO. 201735882

CONST. CONTRACT NO. 201846271

VOLUME NO.

SHEET TITLE

CIRCUIT MAP NEW CIRCUIT 17RRDR

SHEET NO. EL808

308 OF 396

CADD FILE NO. _201735882-B1EELD-4298

b:\dropbox (lean photometrics)\active projects\1571801a rwy den 17r-35l reconstruction\01 drawings\working drawings\Sheets_201735882-B1EELD-4298.dwg Feb 12, 2019 - 5:27pm Kat

NOTES:

1. SEE SHEETS E-001 FOR GENERAL ELECTRICAL NOTES.

CABLE LEGEND

- DENOTES NEW CABLE WITH 2-1/C
- DENOTES NEW CABLE WITH 1-1/C
- DENOTES EXISTING CABLE WITH 2-1/C
- DENOTES EXISTING CABLE WITH 1-1/C

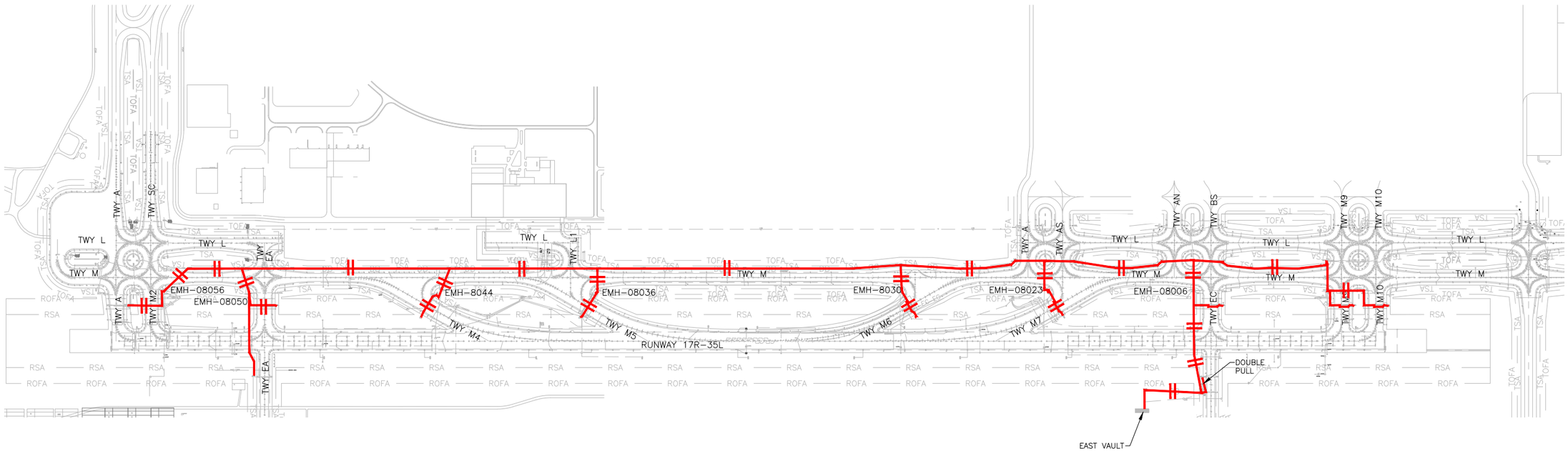

1 CIRCUIT 17RMDT – NEW (NEW CIRCUIT)
NOT TO SCALE

NORTH

COLORADO LICENSED
DORON LEAN
52246
2/15/19
PROFESSIONAL ENGINEER

CITY & COUNTY of DENVER

DENVER INTERNATIONAL AIRPORT

LEAN ENGINEERING

RUNWAY 17R-35L COMPLEX PAVEMENT REHABILITATION PACKAGE 1

ISSUE RECORD

NO.	BY	PURPOSE	DATE	CKD
1	LE	50% DESIGN	09/14/18	DL
2	LE	90% DESIGN	10/26/18	DL
3	LE	BID	12/26/18	DL
4	LE	CONSTRUCTION	2/15/19	DL

SCALE: AS INDICATED

DATE: FEBRUARY 15, 2019

DRAWN BY: KV

CHECKED BY: JA

FAA AIP NO:

WORK BREAKDOWN NO.

DESIGN CONTRACT NO. 201735882

CONST. CONTRACT NO. 201846271

VOLUME NO.

SHEET TITLE

CIRCUIT MAP NEW CIRCUIT 17RMDT

SHEET NO. EL809

CADD FILE NO. _201735882-B1EELD-4298

D:\dropbox (lean photometrics)\active projects\1571801a rwy den 17r-35l reconstruction\01 drawings\working drawings\Sheets_201735882-B1EELD-4298.dwg Feb 12, 2019 - 5:27pm Kat

NOTES:

1. SEE SHEETS E-001 FOR GENERAL ELECTRICAL NOTES.

CABLE LEGEND

- DENOTES NEW CABLE WITH 2-1/C
- DENOTES NEW CABLE WITH 1-1/C
- DENOTES EXISTING CABLE WITH 2-1/C
- DENOTES EXISTING CABLE WITH 1-1/C

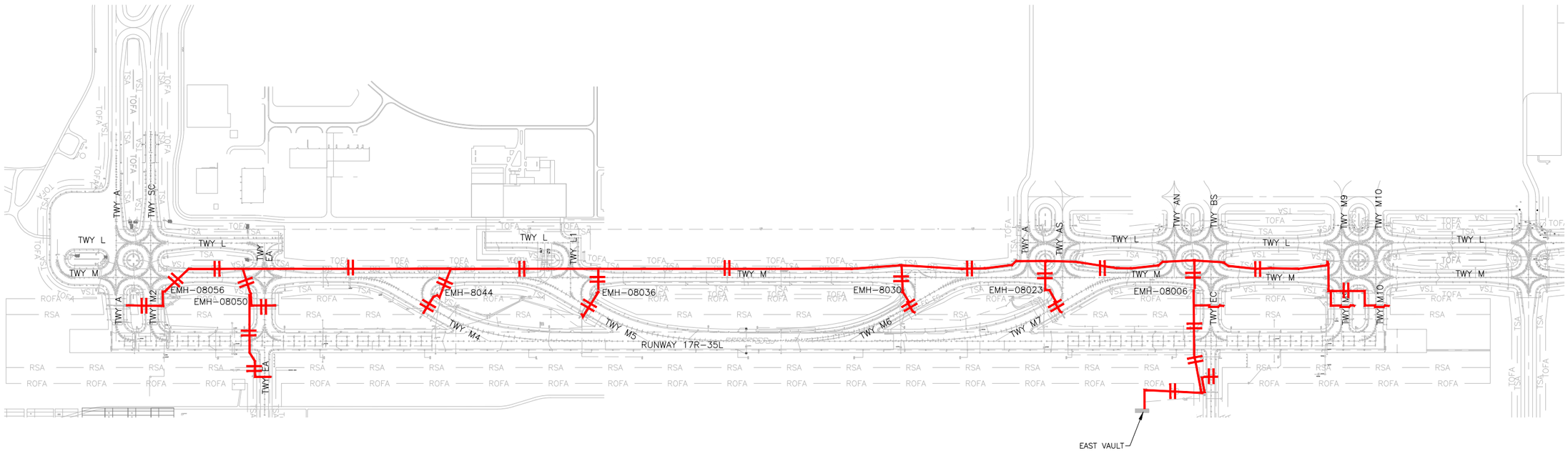

1 CIRCUIT TMWW – EXISTING & NEW
NOT TO SCALE

NORTH

COLORADO LICENSED
DIXON LEA
52246
2/15/19
PROFESSIONAL ENGINEER

CITY & COUNTY of DENVER

DENVER INTERNATIONAL AIRPORT

LEAN ENGINEERING

RUNWAY 17R-35L COMPLEX PAVEMENT REHABILITATION PACKAGE 1

ISSUE RECORD

NO.	BY	PURPOSE	DATE	CKD
1	LE	50% DESIGN	09/14/18	DL
2	LE	90% DESIGN	10/26/18	DL
3	LE	BID	12/26/18	DL
4	LE	CONSTRUCTION	2/15/19	DL

SCALE: AS INDICATED

DATE: FEBRUARY 15, 2019

DRAWN BY: KV

CHECKED BY: JA

FAA AIP NO:

WORK BREAKDOWN NO.

DESIGN CONTRACT NO. 201735882

CONST. CONTRACT NO. 201846271

VOLUME NO.

SHEET TITLE

CIRCUIT MAP
CIRCUIT TMWW

SHEET NO. EL810
310 OF 396

CADD FILE NO. _201735882-B1EELD-4298

D:\dropbox (lean photometrics)\active projects\1157180ia rwy den 17r-35l reconstruction\01 drawings\working drawings\Sheets_201735882-B1EELD-4298.dwg Feb 12, 2019 - 5:27pm Kat

NOTES:

1. SEE SHEETS E-001 FOR GENERAL ELECTRICAL NOTES.

CABLE LEGEND

- DENOTES NEW CABLE WITH 2-1/C
- DENOTES NEW CABLE WITH 1-1/C
- DENOTES EXISTING CABLE WITH 2-1/C
- DENOTES EXISTING CABLE WITH 1-1/C
- DENOTES CONNECTION FROM EXISTING CABLE TO NEW CABLE

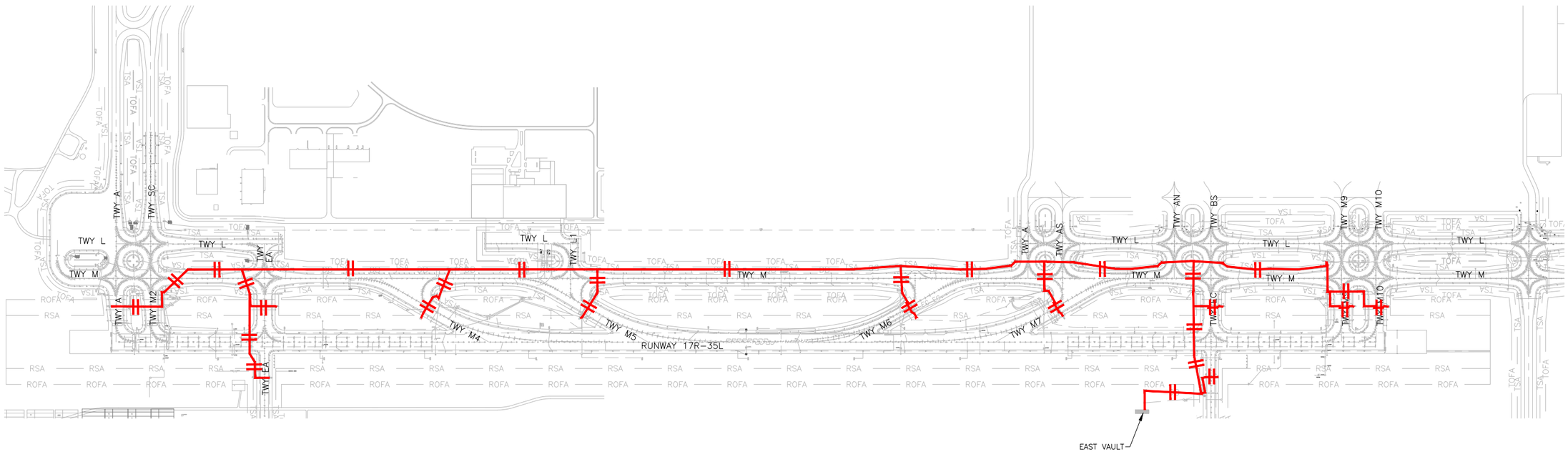

1 CIRCUIT TMSB – EXISTING & NEW
NOT TO SCALE

NORTH

COLORADO LICENSED
DORON LEA
52246
2/15/19
PROFESSIONAL ENGINEER

CITY & COUNTY of DENVER

DENVER INTERNATIONAL AIRPORT

LEAN ENGINEERING

RUNWAY 17R-35L COMPLEX PAVEMENT REHABILITATION PACKAGE 1

ISSUE RECORD

NO.	BY	PURPOSE	DATE	CKD
1	LE	50% DESIGN	09/14/18	DL
2	LE	90% DESIGN	10/26/18	DL
3	LE	BID	12/26/18	DL
4	LE	CONSTRUCTION	2/15/19	DL

SCALE: AS INDICATED

DATE: FEBRUARY 15, 2019

DRAWN BY: KV

CHECKED BY: JA

FAA AIP NO:

WORK BREAKDOWN NO.

DESIGN CONTRACT NO. 201735882

CONST. CONTRACT NO. 201846271

VOLUME NO.

SHEET TITLE

CIRCUIT MAP
CIRCUIT TMSB

SHEET NO. EL811
311 OF 396

CADD FILE NO. _201735882-B1EELD-4298

D:\dropbox (lean photometrics)\active projects\1571801a den 17r-35l reconstruction\01 drawings\working drawings\Sheets_201735882-B1EELD-4298.dwg Feb 12, 2019 - 5:27pm Kat

NOTES:

1. SEE SHEETS E-001 FOR GENERAL ELECTRICAL NOTES.

CABLE LEGEND

- DENOTES NEW CABLE WITH 2-1/C
- DENOTES NEW CABLE WITH 1-1/C
- DENOTES EXISTING CABLE WITH 2-1/C
- DENOTES EXISTING CABLE WITH 1-1/C
- DENOTES CONNECTION FROM EXISTING CABLE TO NEW CABLE

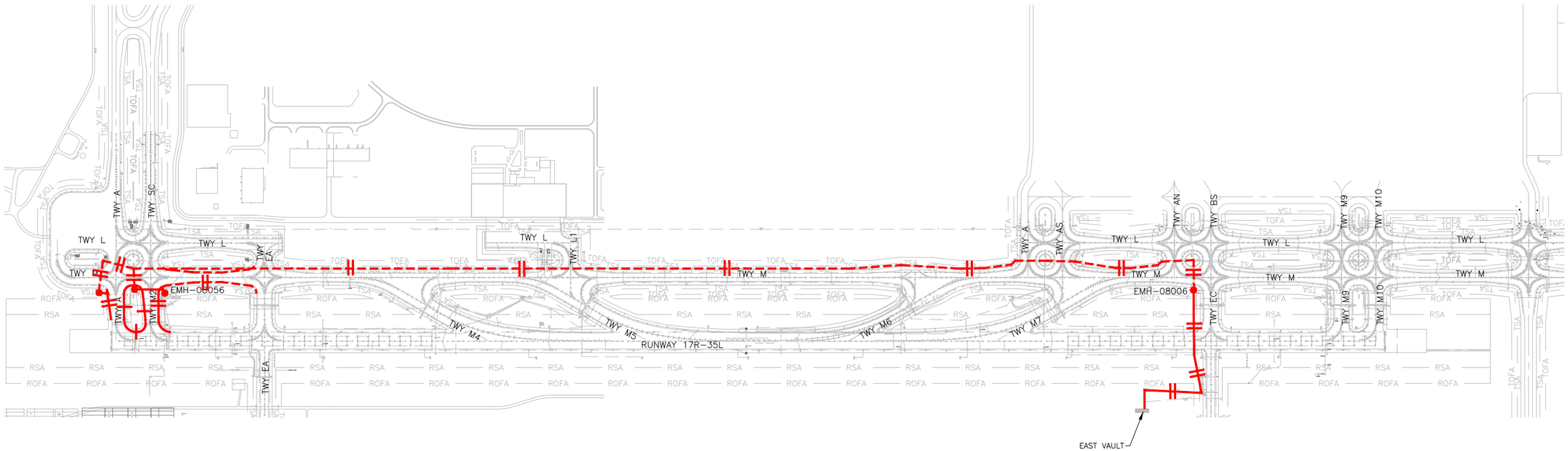

1 CIRCUIT TME1 – EXISTING & NEW
NOT TO SCALE

NORTH

COLORADO LICENSED
DORON LEAN
52246
2/15/19
PROFESSIONAL ENGINEER

CITY & COUNTY of DENVER

DENVER INTERNATIONAL AIRPORT

LEAN ENGINEERING

RUNWAY 17R-35L COMPLEX PAVEMENT REHABILITATION PACKAGE 1

ISSUE RECORD

NO.	BY	PURPOSE	DATE	CKD
1	LE	50% DESIGN	09/14/18	DL
2	LE	90% DESIGN	10/26/18	DL
3	LE	BID	12/26/18	DL
4	LE	CONSTRUCTION	2/15/19	DL

SCALE: AS INDICATED

DATE: FEBRUARY 15, 2019

DRAWN BY: KV

CHECKED BY: JA

FAA AIP NO:

WORK BREAKDOWN NO.

DESIGN CONTRACT NO. 201735882

CONST. CONTRACT NO. 201846271

VOLUME NO.

SHEET TITLE

CIRCUIT MAP
CIRCUIT TME1

SHEET NO. EL812
312 OF 396

CADD FILE NO. _201735882-B1EELD-4298

D:\dropbox (lean photometrics)\active projects\1571801a rwy den 17r-35l reconstruction\01 drawings\working drawings\Sheets_201735882-B1EELD-4298.dwg Feb 12, 2019 - 5:27pm Kat

NOTES:

1. SEE SHEETS E-001 FOR GENERAL ELECTRICAL NOTES.

CABLE LEGEND

- DENOTES NEW CABLE WITH 2-1/C
- DENOTES NEW CABLE WITH 1-1/C
- DENOTES EXISTING CABLE WITH 2-1/C
- DENOTES EXISTING CABLE WITH 1-1/C
- DENOTES CONNECTION FROM EXISTING CABLE TO NEW CABLE

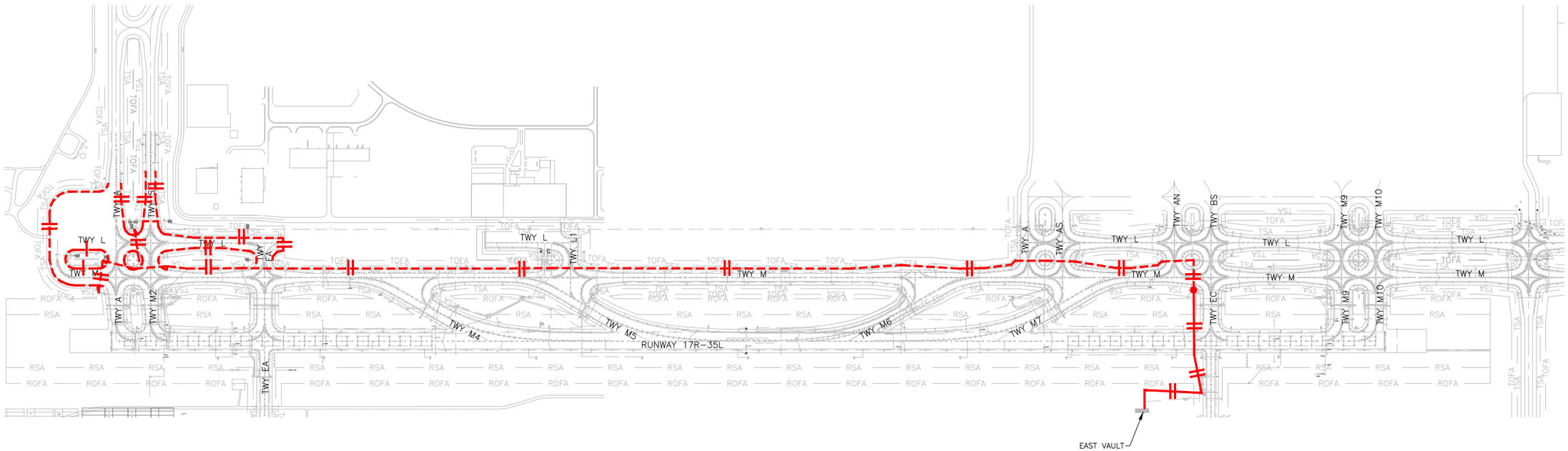

1 CIRCUIT TAE1 – EXISTING & NEW
NOT TO SCALE

NORTH

COLORADO LICENSED
DORON LEAN
52246
2/15/19
PROFESSIONAL ENGINEER

CITY & COUNTY of DENVER

DENVER INTERNATIONAL AIRPORT

LEAN ENGINEERING

RUNWAY 17R-35L COMPLEX PAVEMENT REHABILITATION PACKAGE 1

ISSUE RECORD

NO.	BY	PURPOSE	DATE	CKD
1	LE	50% DESIGN	09/14/18	DL
2	LE	90% DESIGN	10/26/18	DL
3	LE	BID	12/26/18	DL
4	LE	CONSTRUCTION	2/15/19	DL

SCALE: AS INDICATED

DATE: FEBRUARY 15, 2019

DRAWN BY: KV

CHECKED BY: JA

FAA AIP NO:

WORK BREAKDOWN NO.

DESIGN CONTRACT NO. 201735882

CONST. CONTRACT NO. 201846271

VOLUME NO.

SHEET TITLE

CIRCUIT MAP
CIRCUIT TAE1

SHEET NO.
EL813
313 OF 396

CADD FILE NO.
_201735882-B1EELD-4298

b:\dropbox (lean photometrics)\active projects\1157180ia rwy den 17r-35l reconstruction\01 drawings\working drawings\Sheets_201735882-B1EELD-4298.dwg Feb 12, 2019 - 5:27pm Kat

NOTES:

1. SEE SHEETS E-001 FOR GENERAL ELECTRICAL NOTES.

CABLE LEGEND

- DENOTES NEW CABLE WITH 2-1/C
- DENOTES NEW CABLE WITH 1-1/C
- DENOTES EXISTING CABLE WITH 2-1/C
- DENOTES EXISTING CABLE WITH 1-1/C
- DENOTES CONNECTION FROM EXISTING CABLE TO NEW CABLE

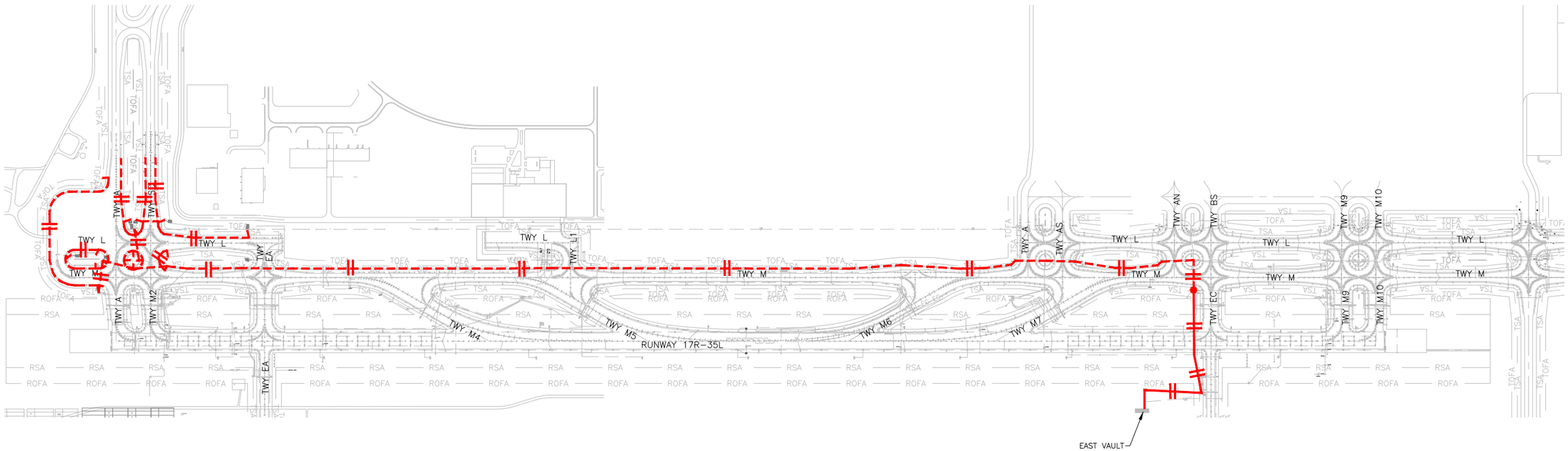

1 CIRCUIT TAS1 – EXISTING & NEW
NOT TO SCALE

NORTH

COLORADO LICENSED
DORON LEAN
52246
2/15/19
PROFESSIONAL ENGINEER

CITY & COUNTY of DENVER

DENVER INTERNATIONAL AIRPORT

LEAN ENGINEERING

RUNWAY 17R-35L COMPLEX PAVEMENT REHABILITATION PACKAGE 1

ISSUE RECORD

NO.	BY	PURPOSE	DATE	CKD
1	LE	50% DESIGN	09/14/18	DL
2	LE	90% DESIGN	10/26/18	DL
3	LE	BID	12/26/18	DL
4	LE	CONSTRUCTION	2/15/19	DL

SCALE: AS INDICATED

DATE: FEBRUARY 15, 2019

DRAWN BY: KV

CHECKED BY: JA

FAA AIP NO:

WORK BREAKDOWN NO.

DESIGN CONTRACT NO. 201735882

CONST. CONTRACT NO. 201846271

VOLUME NO.

SHEET TITLE

CIRCUIT MAP
CIRCUIT TAS1

SHEET NO. EL814
314 OF 396

CADD FILE NO. _201735882-B1EELD-4298

B:\dropbox (lean photometrics)\active projects\1157180ia rwy den 17r-35l reconstruction\01 drawings\working drawings\Sheets_201735882-B1EELD-4298.dwg Feb 12, 2019 - 5:28pm Kat

NOTES:

1. SEE SHEETS E-001 FOR GENERAL ELECTRICAL NOTES.

CABLE LEGEND

- DENOTES NEW CABLE WITH 2-1/C
- DENOTES NEW CABLE WITH 1-1/C
- DENOTES EXISTING CABLE WITH 2-1/C
- DENOTES EXISTING CABLE WITH 1-1/C
- DENOTES CONNECTION FROM EXISTING CABLE TO NEW CABLE

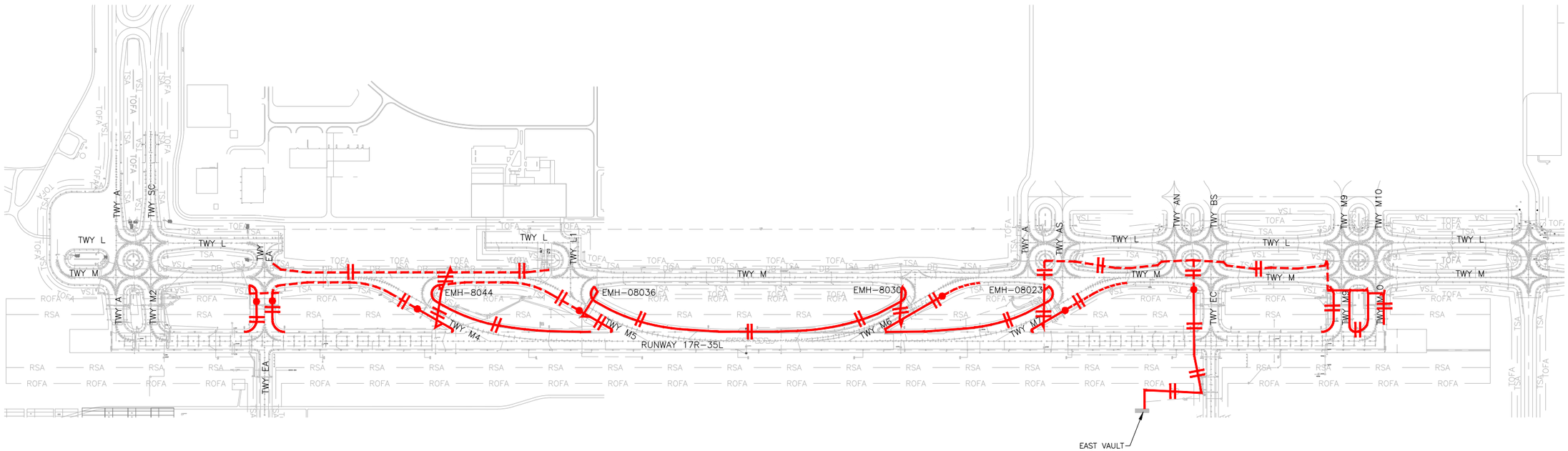

1 CIRCUIT TME4 – EXISTING & NEW
NOT TO SCALE

NORTH

CITY & COUNTY of DENVER

DENVER INTERNATIONAL AIRPORT

LEAN ENGINEERING

RUNWAY 17R-35L COMPLEX PAVEMENT REHABILITATION PACKAGE 1

ISSUE RECORD

NO.	BY	PURPOSE	DATE	CKD
1	LE	50% DESIGN	09/14/18	DL
2	LE	90% DESIGN	10/26/18	DL
3	LE	BID	12/26/18	DL
4	LE	CONSTRUCTION	2/15/19	DL

SCALE: AS INDICATED

DATE: FEBRUARY 15, 2019

DRAWN BY: KV

CHECKED BY: JA

FAA AIP NO:

WORK BREAKDOWN NO.

DESIGN CONTRACT NO. 201735882

CONST. CONTRACT NO. 201846271

VOLUME NO.

SHEET TITLE

CIRCUIT MAP
CIRCUIT TME4

SHEET NO. EL815
315 OF 396

CADD FILE NO. _201735882-B1EELD-4298

COLORADO LICENSED PROFESSIONAL ENGINEER
DORON LEAN
52246
2/15/19

Feb 12, 2019 – 5:28pm Kat

D:\dropbox (lean photometrics)\active projects\1571801a rwy den 17r-35l reconstruction\01 drawings\working drawings\Sheets_201735882-B1EELD-4298.dwg

NOTES:

1. SEE SHEETS E-001 FOR GENERAL ELECTRICAL NOTES.

CABLE LEGEND

- DENOTES NEW CABLE WITH 2-1/C
- DENOTES NEW CABLE WITH 1-1/C
- DENOTES EXISTING CABLE WITH 2-1/C
- DENOTES EXISTING CABLE WITH 1-1/C
- DENOTES CONNECTION FROM EXISTING CABLE TO NEW CABLE

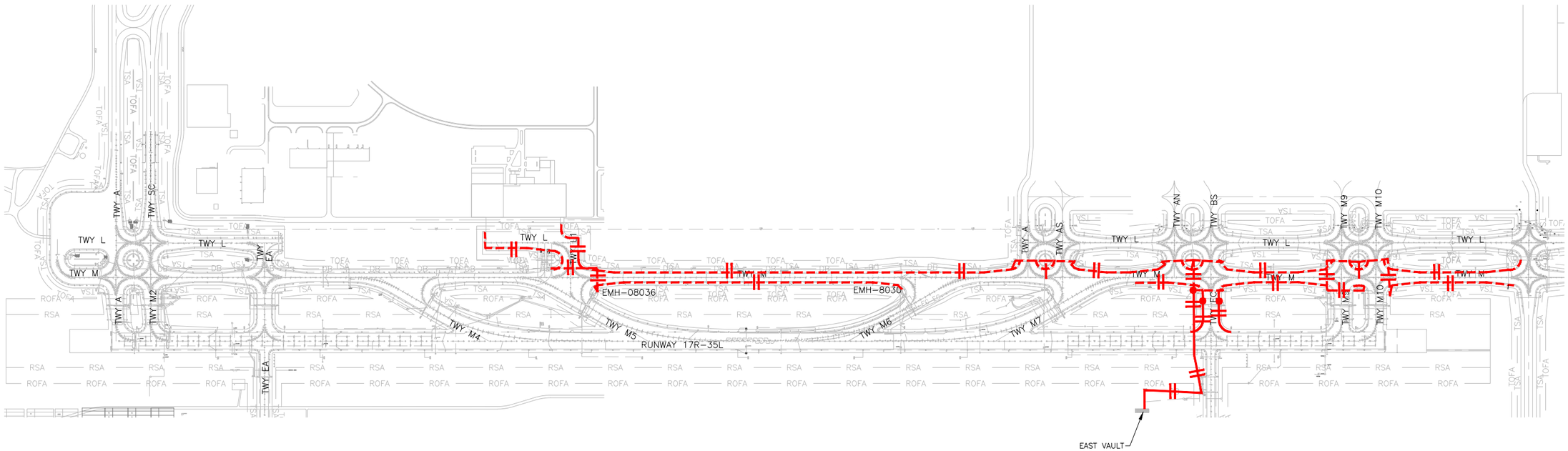

1 CIRCUIT TME2 – EXISTING & NEW
NOT TO SCALE

NORTH

COLORADO LICENSED
DORON LEAN
52246
2/15/19
PROFESSIONAL ENGINEER

CITY & COUNTY of DENVER

DENVER INTERNATIONAL AIRPORT

LEAN ENGINEERING

RUNWAY 17R-35L COMPLEX PAVEMENT REHABILITATION PACKAGE 1

ISSUE RECORD

NO.	BY	PURPOSE	DATE	CKD
1	LE	50% DESIGN	09/14/18	DL
2	LE	90% DESIGN	10/26/18	DL
3	LE	BID	12/26/18	DL
4	LE	CONSTRUCTION	2/15/19	DL

SCALE: AS INDICATED

DATE: FEBRUARY 15, 2019

DRAWN BY: KV

CHECKED BY: JA

FAA AIP NO:

WORK BREAKDOWN NO.

DESIGN CONTRACT NO. 201735882

CONST. CONTRACT NO. 201846271

VOLUME NO.

SHEET TITLE

CIRCUIT MAP
CIRCUIT TME2

SHEET NO.
EL816
316 OF 396

CADD FILE NO.
_201735882-B1EELD-4298

b:\dropbox (lean photometrics)\active projects\1571801a rwy den 17r-35l reconstruction\01 drawings\working drawings\Sheets_201735882-B1EELD-4298.dwg Feb 12, 2019 - 5:28pm Kat

NOTES:

1. SEE SHEETS E-001 FOR GENERAL ELECTRICAL NOTES.

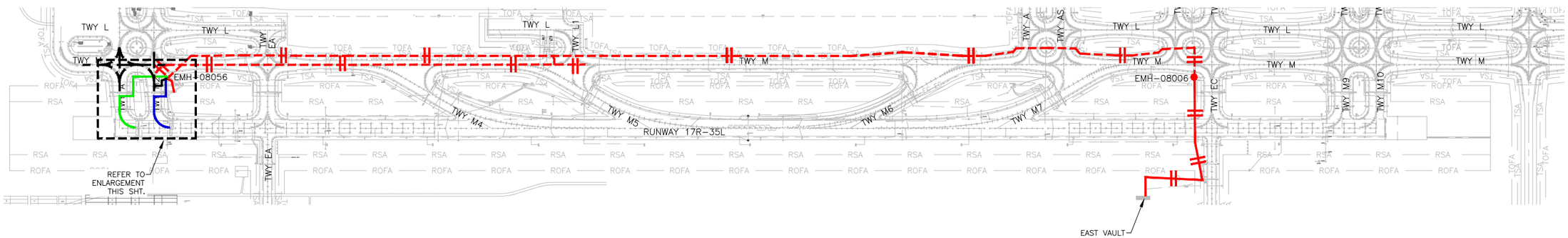

1 – CIRCUIT TMC1 (HOMERUN), TM2C1, TM1SB2B, TM1SB3, TM1SB2A, TM2SB2B, TM2SB3, TM2SB2A – EXISTING & NEW

NOT TO SCALE

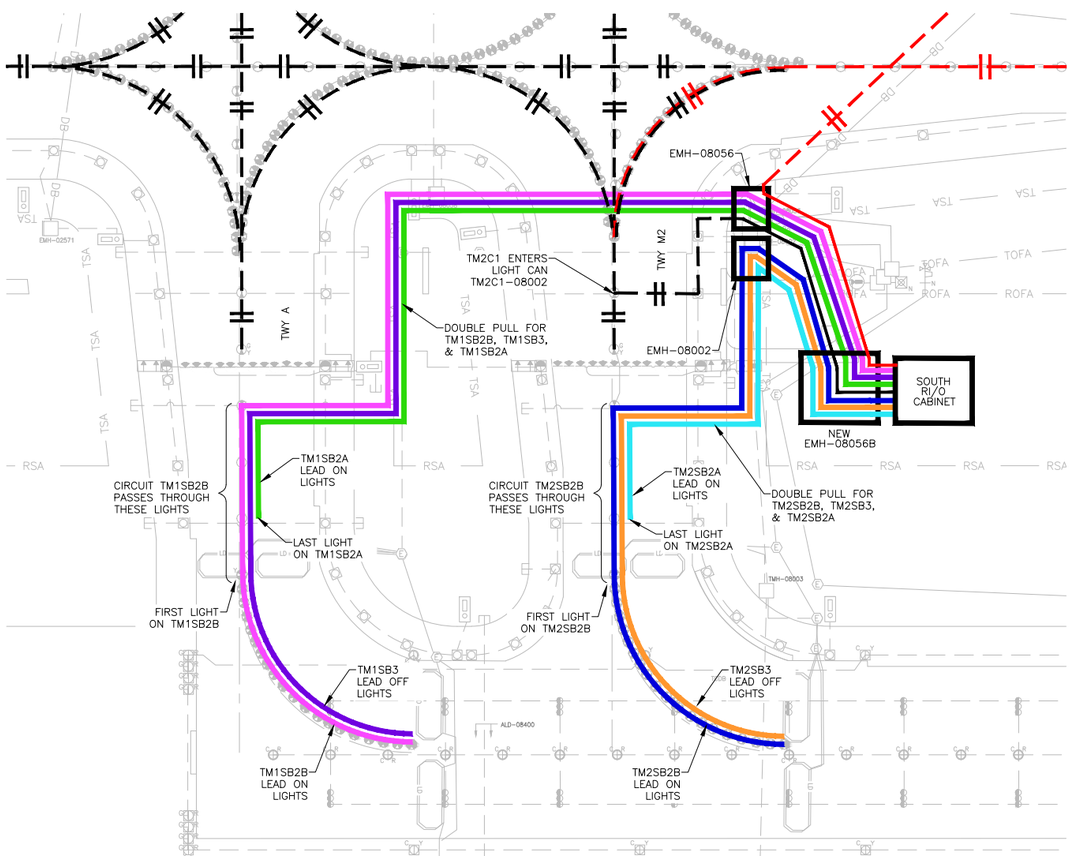

2 – CIRCUIT ENLARGEMENT

NOT TO SCALE

LEGEND:

- TMC1
- TM2C1
- TM1SB2B
- TM1SB3
- TM1SB2A
- TM2SB2B
- TM2SB3
- TM2SB2A

CABLE LEGEND

- DENOTES NEW CABLE WITH 2-1/C
- DENOTES NEW CABLE WITH 1-1/C
- DENOTES EXISTING CABLE WITH 2-1/C
- DENOTES EXISTING CABLE WITH 1-1/C
- DENOTES CONNECTION FROM EXISTING CABLE TO NEW CABLE

NORTH

COLORADO LICENSED
DERON LEA
52246
2/15/19
PROFESSIONAL ENGINEER

CITY & COUNTY of DENVER

DENVER INTERNATIONAL AIRPORT

LEAN ENGINEERING

RUNWAY 17R-35L COMPLEX PAVEMENT REHABILITATION PACKAGE 1

ISSUE RECORD

NO.	BY	PURPOSE	DATE	CKD
1	LE	50% DESIGN	09/14/18	DL
2	LE	90% DESIGN	10/26/18	DL
3	LE	BID	12/26/18	DL
4	LE	CONSTRUCTION	2/15/19	DL

SCALE: AS INDICATED

DATE: FEBRUARY 15, 2019

DRAWN BY: KV

CHECKED BY: JA

FAA AIP NO:

WORK BREAKDOWN NO.

DESIGN CONTRACT NO. 201735882

CONST. CONTRACT NO. 201846271

VOLUME NO.

SHEET TITLE: CIRCUIT MAP CIRCUIT 35LCP (SOUTH)

SHEET NO. EL817

317 OF 396

CADD FILE NO. _201735882-B1EELD-4298

D:\dropbox (lean photometrics)\active projects\1571801a rah den 17r-35l reconstruction\01 drawings\working drawings\Sheets_201735882-B1EELD-4298.dwg Feb 12, 2019 - 5:28pm Kat

NOTES:

1. SEE SHEETS E-001 FOR GENERAL ELECTRICAL NOTES.

LEGEND:

- TMC9R
- TMC9
- TM10SB3
- TM09SB3

CABLE LEGEND

- DENOTES NEW CABLE WITH 2-1/C
- DENOTES NEW CABLE WITH 1-1/C
- DENOTES EXISTING CABLE WITH 2-1/C
- DENOTES EXISTING CABLE WITH 1-1/C
- DENOTES CONNECTION FROM EXISTING CABLE TO NEW CABLE

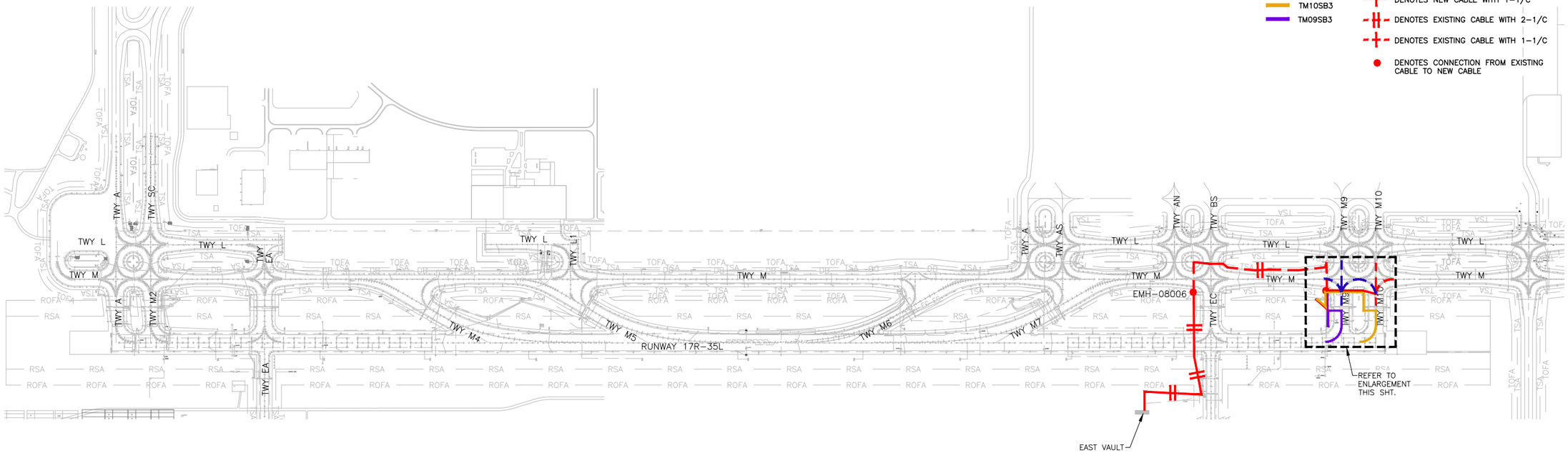

1 – CIRCUIT TMC9 (HOMERUN), TMC9R, TM9SB3, TM10SB3 – EXISTING & NEW
NOT TO SCALE

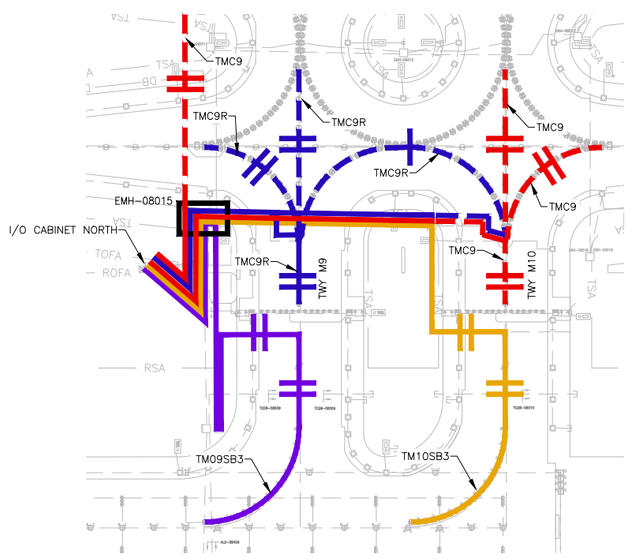

2 – CIRCUIT ENLARGEMENT
NOT TO SCALE

NORTH

CITY & COUNTY of DENVER

DENVER INTERNATIONAL AIRPORT

LEAN ENGINEERING

RUNWAY 17R-35L COMPLEX PAVEMENT REHABILITATION PACKAGE 1

ISSUE RECORD

NO.	BY	PURPOSE	DATE	CKD
1	LE	50% DESIGN	09/14/18	DL
2	LE	90% DESIGN	10/26/18	DL
3	LE	BID	12/26/18	DL
4	LE	CONSTRUCTION	2/15/19	DL

SCALE: AS INDICATED

DATE: FEBRUARY 15, 2019

DRAWN BY: KV

CHECKED BY: JA

FAA AIP NO:

WORK BREAKDOWN NO.

DESIGN CONTRACT NO. 201735882

CONST. CONTRACT NO. 201846271

VOLUME NO.

SHEET TITLE: CIRCUIT MAP CIRCUIT 35LCP (NORTH)

SHEET NO. EL818

318 OF 396

CADD FILE NO. _201735882-B1EELD-4298

COLORADO LICENSED PROFESSIONAL ENGINEER JOSHUA LEA 52246 2/15/19

Feb 12, 2019 – 5:29pm Kat

D:\dropbox (lean photometrics)\active projects\1571801a rah den 17r-35l reconstruction\01 drawings\working drawings\sheets_201735882-B1EELD-4298.dwg

NOTES:

1. SEE SHEETS E-001 FOR GENERAL ELECTRICAL NOTES.

CABLE LEGEND

- DENOTES NEW CABLE WITH 2-1/C
- DENOTES NEW CABLE WITH 1-1/C
- DENOTES EXISTING CABLE WITH 2-1/C
- DENOTES EXISTING CABLE WITH 1-1/C
- DENOTES CONNECTION FROM EXISTING CABLE TO NEW CABLE

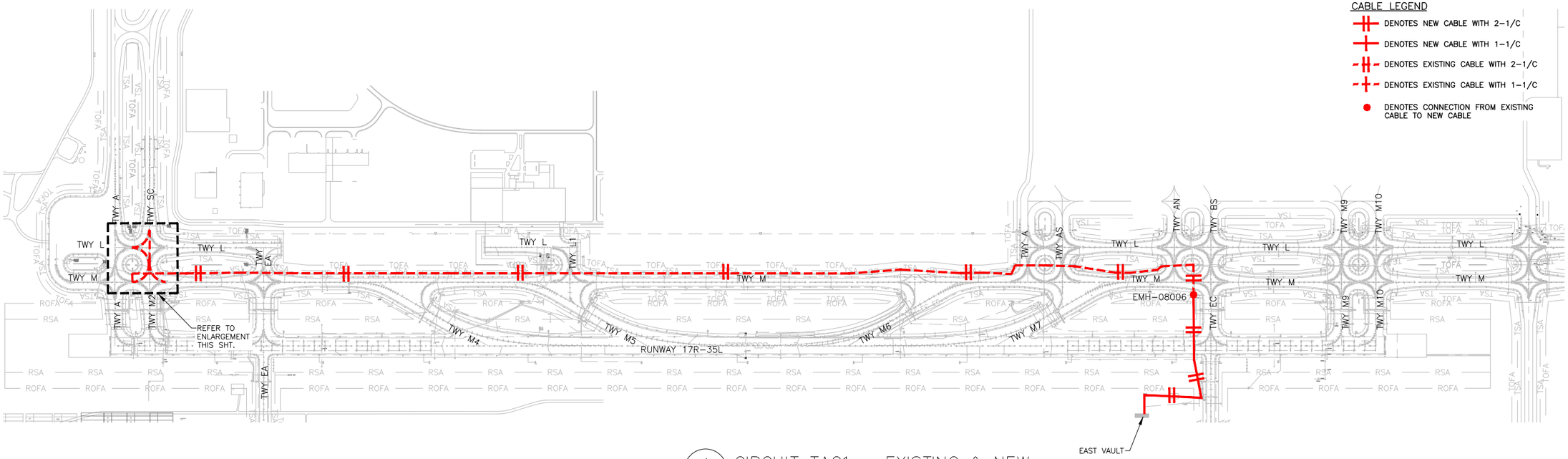

1 CIRCUIT TAC1 – EXISTING & NEW
NOT TO SCALE

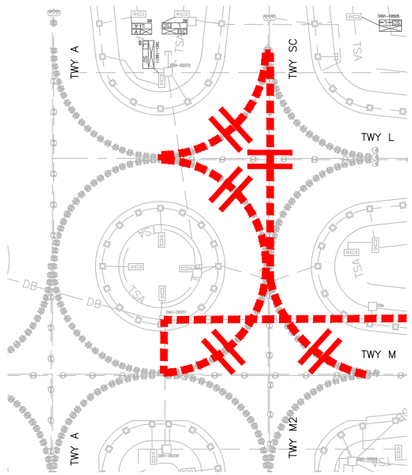

2 CIRCUIT ENLARGEMENT
NOT TO SCALE

NORTH

COLORADO LICENSED
DORON LEAN
52246
2/15/19
PROFESSIONAL ENGINEER

CITY & COUNTY of DENVER

DENVER INTERNATIONAL AIRPORT

LEAN ENGINEERING

RUNWAY 17R-35L COMPLEX PAVEMENT REHABILITATION PACKAGE 1

ISSUE RECORD

NO.	BY	PURPOSE	DATE	CKD
1	LE	50% DESIGN	09/14/18	DL
2	LE	90% DESIGN	10/26/18	DL
3	LE	BID	12/26/18	DL
4	LE	CONSTRUCTION	2/15/19	DL

SCALE: AS INDICATED

DATE: FEBRUARY 15, 2019

DRAWN BY: KV

CHECKED BY: JA

FAA AIP NO:

WORK BREAKDOWN NO.

DESIGN CONTRACT NO. 201735882

CONST. CONTRACT NO. 201846271

VOLUME NO.

SHEET TITLE

CIRCUIT MAP
CIRCUIT TAC1

SHEET NO. EL819
319 OF 396

CADD FILE NO. _201735882-B1EELD-4298

b:\dropbox (lean photometrics)\active projects\1571801a rwy den 17r-35l reconstruction\01 drawings\working drawings\Sheets_201735882-B1EELD-4298.dwg Feb 12, 2019 - 5:29pm Kat

NOTES:

1. SEE SHEETS E-001 FOR GENERAL ELECTRICAL NOTES.

CABLE LEGEND

- DENOTES NEW CABLE WITH 2-1/C
- DENOTES NEW CABLE WITH 1-1/C
- DENOTES EXISTING CABLE WITH 2-1/C
- DENOTES EXISTING CABLE WITH 1-1/C
- DENOTES CONNECTION FROM EXISTING CABLE TO NEW CABLE

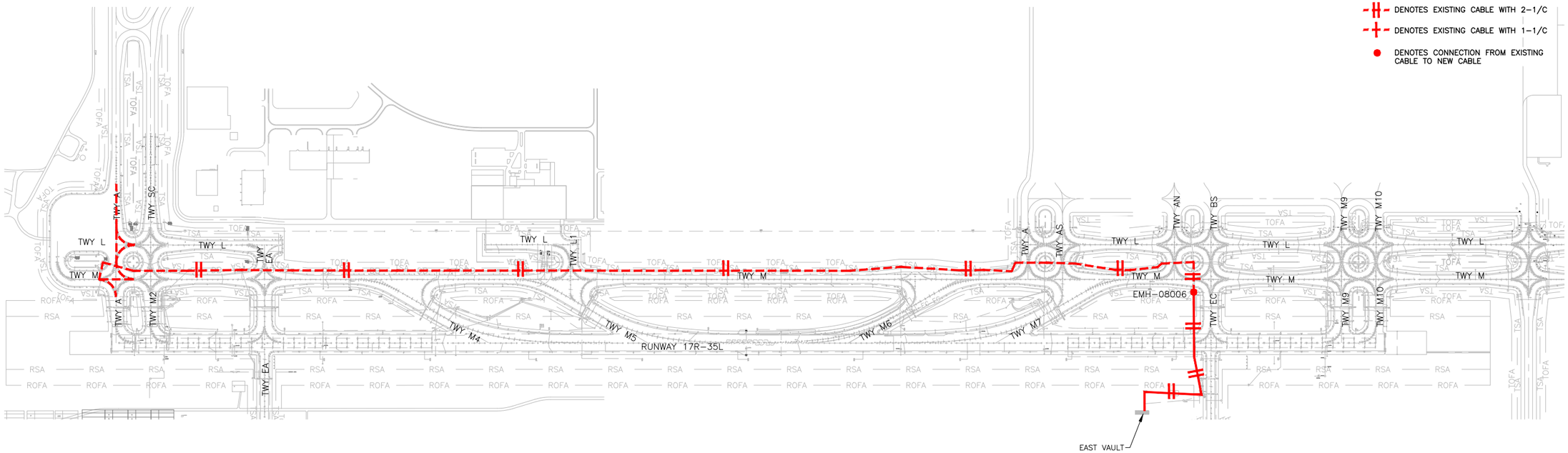

1 CIRCUIT TAC2 – EXISTING & NEW
NOT TO SCALE

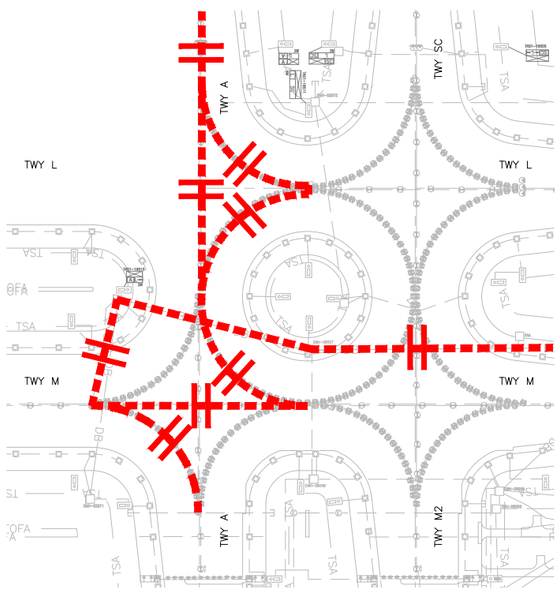

2 CIRCUIT ENLARGEMENT
NOT TO SCALE

NORTH

COLORADO LICENSED
AARON LEA
52246
2/15/19
PROFESSIONAL ENGINEER

CITY & COUNTY of DENVER

DENVER INTERNATIONAL AIRPORT

LEAN ENGINEERING

RUNWAY 17R-35L COMPLEX PAVEMENT REHABILITATION PACKAGE 1

ISSUE RECORD

NO.	BY	PURPOSE	DATE	CKD
1	LE	50% DESIGN	09/14/18	DL
2	LE	90% DESIGN	10/26/18	DL
3	LE	BID	12/26/18	DL
4	LE	CONSTRUCTION	2/15/19	DL

SCALE: AS INDICATED

DATE: FEBRUARY 15, 2019

DRAWN BY: KV

CHECKED BY: JA

FAA AIP NO:

WORK BREAKDOWN NO.

DESIGN CONTRACT NO. 201735882

CONST. CONTRACT NO. 201846271

VOLUME NO.

SHEET TITLE

CIRCUIT MAP
CIRCUIT TAC2

SHEET NO. EL820
320 OF 396

CADD FILE NO. _201735882-B1EELD-4298

D:\dropbox (lean photometrics)\active projects\1457801a rah den 17r-35l reconstruction\01 drawings\working drawings\Sheets_201735882-B1EELD-4298.dwg Feb 12, 2019 - 5:29pm Kat

NOTES:

1. SEE SHEETS E-001 FOR GENERAL ELECTRICAL NOTES.

CABLE LEGEND

- DENOTES NEW CABLE WITH 2-1/C
- DENOTES NEW CABLE WITH 1-1/C
- DENOTES EXISTING CABLE WITH 2-1/C
- DENOTES EXISTING CABLE WITH 1-1/C
- DENOTES CONNECTION FROM EXISTING CABLE TO NEW CABLE

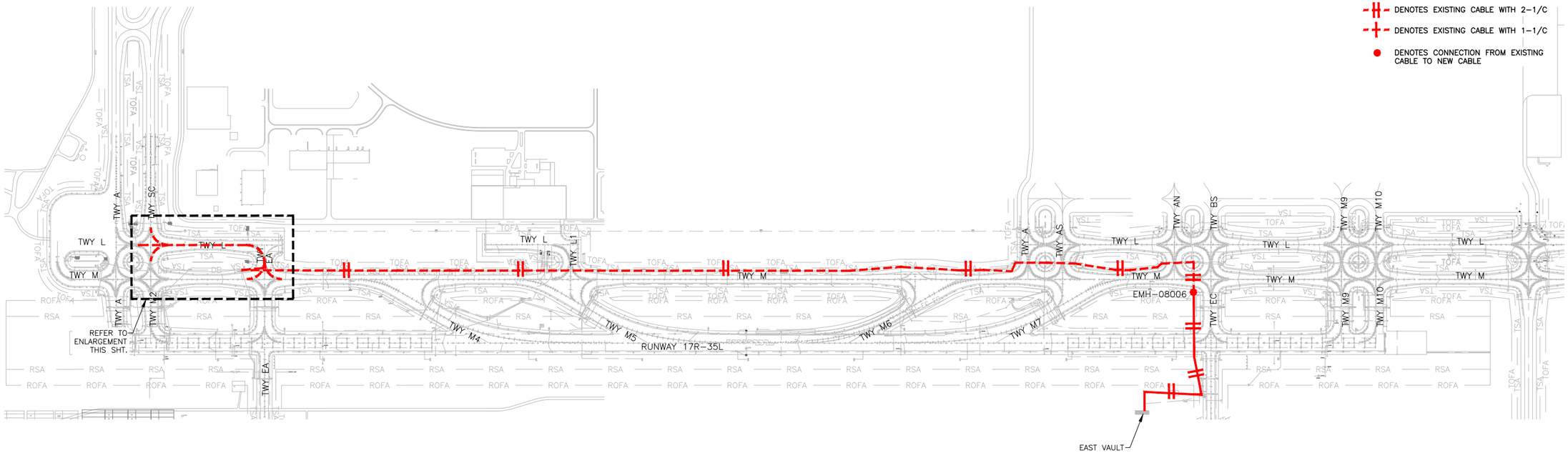

1 CIRCUIT TASC1 – EXISTING & NEW
NOT TO SCALE

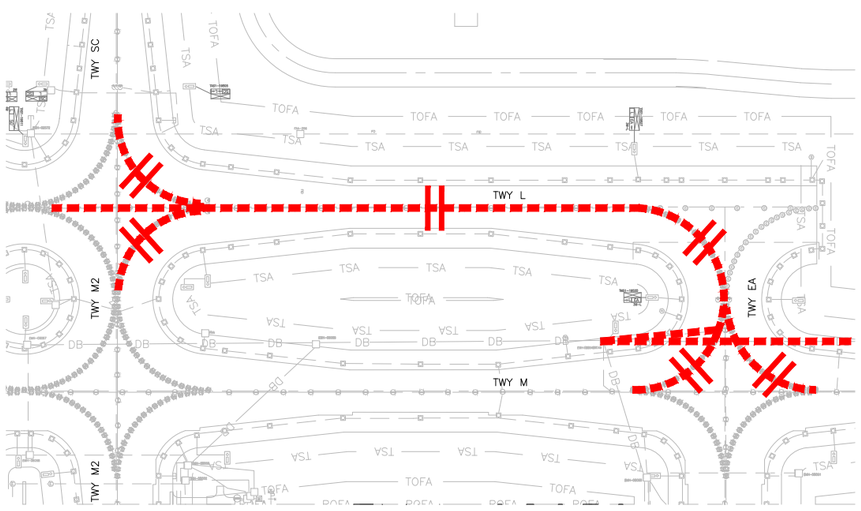

2 CIRCUIT ENLARGMENT
NOT TO SCALE

NORTH

COLORADO LICENSED
CARON LEA
52246
2/15/19
PROFESSIONAL ENGINEER

CITY & COUNTY of DENVER

DENVER INTERNATIONAL AIRPORT

LEAN ENGINEERING

RUNWAY 17R-35L COMPLEX PAVEMENT REHABILITATION PACKAGE 1

ISSUE RECORD

NO.	BY	PURPOSE	DATE	CKD
1	LE	50% DESIGN	09/14/18	DL
2	LE	90% DESIGN	10/26/18	DL
3	LE	BID	12/26/18	DL
4	LE	CONSTRUCTION	2/15/19	DL

SCALE: AS INDICATED

DATE: FEBRUARY 15, 2019

DRAWN BY: KV

CHECKED BY: JA

FAA AIP NO:

WORK BREAKDOWN NO.

DESIGN CONTRACT NO. 201735882

CONST. CONTRACT NO. 201846271

VOLUME NO.

SHEET TITLE

CIRCUIT MAP
CIRCUIT TASC1

SHEET NO. EL821
321 OF 396

CADD FILE NO. _201735882-B1EELD-4298

Feb 12, 2019 – 5:29pm Kat

D:\dropbox (lean photometrics)\active projects\1571801a rah den 17r-35l reconstruction\01 drawings\working drawings\Sheet1_201735882-B1EELD-4298.dwg

NOTES:

1. SEE SHEETS E-001 FOR GENERAL ELECTRICAL NOTES.

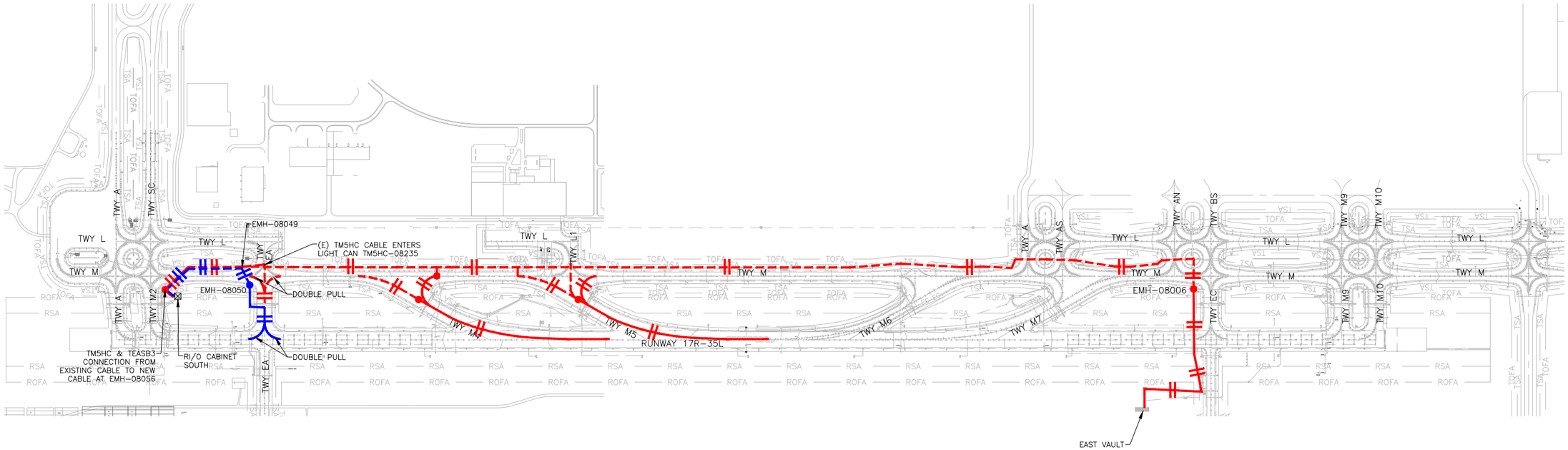

1 CIRCUIT TM5HC & TEASB3 – EXISTING & NEW
NOT TO SCALE

CABLE LEGEND

- DENOTES NEW TM5HC CABLE WITH 2-1/C
- DENOTES NEW TM5HC CABLE WITH 1-1/C
- DENOTES EXISTING TM5HC CABLE WITH 2-1/C
- DENOTES EXISTING TM5HC CABLE WITH 1-1/C
- DENOTES CONNECTION FROM EXISTING TM5HC CABLE TO NEW CABLE
- DENOTES NEW TEASB3 CABLE WITH 2-1/C
- DENOTES NEW TEASB3 CABLE WITH 1-1/C
- DENOTES EXISTING TEASB3 CABLE WITH 2-1/C
- DENOTES EXISTING TEASB3 CABLE WITH 1-1/C
- DENOTES CONNECTION FROM EXISTING TEASB3 CABLE TO NEW CABLE

NORTH

COLORADO LICENSED
JORON LEA
52246
2/15/19
PROFESSIONAL ENGINEER

CITY & COUNTY of DENVER

DENVER INTERNATIONAL AIRPORT

LEAN ENGINEERING

RUNWAY 17R-35L COMPLEX PAVEMENT REHABILITATION PACKAGE 1

ISSUE RECORD

NO.	BY	PURPOSE	DATE	CKD
1	LE	50% DESIGN	09/14/18	DL
2	LE	90% DESIGN	10/26/18	DL
3	LE	BID	12/26/18	DL
4	LE	CONSTRUCTION	2/15/19	DL

SCALE: AS INDICATED

DATE: FEBRUARY 15, 2019

DRAWN BY: KV

CHECKED BY: JA

FAA AIP NO:

WORK BREAKDOWN NO.

DESIGN CONTRACT NO. 201735882

CONST. CONTRACT NO. 201846271

VOLUME NO.

SHEET TITLE

CIRCUIT MAP
CIRCUIT TM5HC

SHEET NO. EL822
322 OF 396

CADD FILE NO. _201735882-B1EELD-4298

Feb 12, 2019 – 5:29pm Kat

D:\dropbox (lean photometrics)\active projects\1571801a rah den 17r-35l reconstruction\01 drawings\working drawings\Sheets_201735882-B1EELD-4298.dwg

NOTES:

1. SEE SHEETS E-001 FOR GENERAL ELECTRICAL NOTES.

CABLE LEGEND

- DENOTES NEW CABLE WITH 2-1/C
- DENOTES NEW CABLE WITH 1-1/C
- DENOTES EXISTING CABLE WITH 2-1/C
- DENOTES EXISTING CABLE WITH 1-1/C
- DENOTES CONNECTION FROM EXISTING CABLE TO NEW CABLE

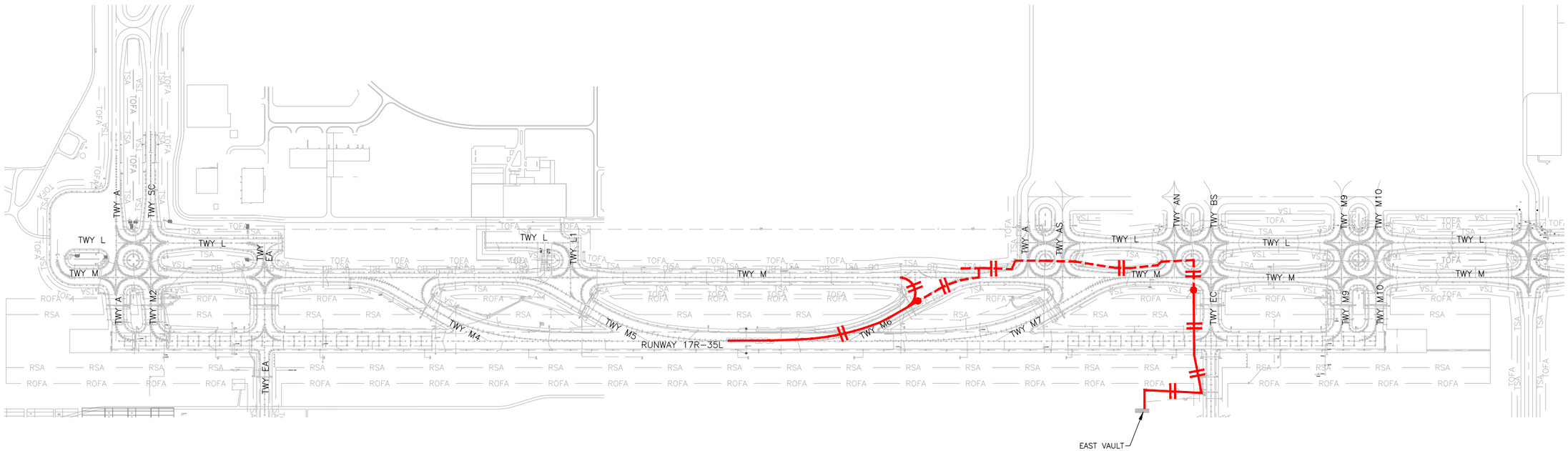

1 CIRCUIT TM6HC – EXISTING & NEW
NOT TO SCALE

NORTH

COLORADO LICENSED
DORON LEAN
52246
2/15/19
PROFESSIONAL ENGINEER

CITY & COUNTY of DENVER

DENVER INTERNATIONAL AIRPORT

LEAN ENGINEERING

RUNWAY 17R-35L COMPLEX PAVEMENT REHABILITATION PACKAGE 1

ISSUE RECORD

NO.	BY	PURPOSE	DATE	CKD
1	LE	50% DESIGN	09/14/18	DL
2	LE	90% DESIGN	10/26/18	DL
3	LE	BID	12/26/18	DL
4	LE	CONSTRUCTION	2/15/19	DL

SCALE: AS INDICATED

DATE: FEBRUARY 15, 2019

DRAWN BY: KV

CHECKED BY: JA

FAA AIP NO:

WORK BREAKDOWN NO.

DESIGN CONTRACT NO. 201735882

CONST. CONTRACT NO. 201846271

VOLUME NO.

SHEET TITLE

CIRCUIT MAP
CIRCUIT TM6HC

SHEET NO. EL823
323 OF 396

CADD FILE NO. _201735882-B1EELD-4298

b:\dropbox (lean photometrics)\active projects\1571801a rwy den 17r-35l reconstruction\01 drawings\working drawings\Sheets_201735882-B1EELD-4298.dwg Feb 12, 2019 - 5:30pm Kat

NOTES:

1. SEE SHEETS E-001 FOR GENERAL ELECTRICAL NOTES.

CABLE LEGEND

- DENOTES NEW CABLE WITH 2-1/C
- DENOTES NEW CABLE WITH 1-1/C
- DENOTES EXISTING CABLE WITH 2-1/C
- DENOTES EXISTING CABLE WITH 1-1/C
- DENOTES CONNECTION FROM EXISTING CABLE TO NEW CABLE

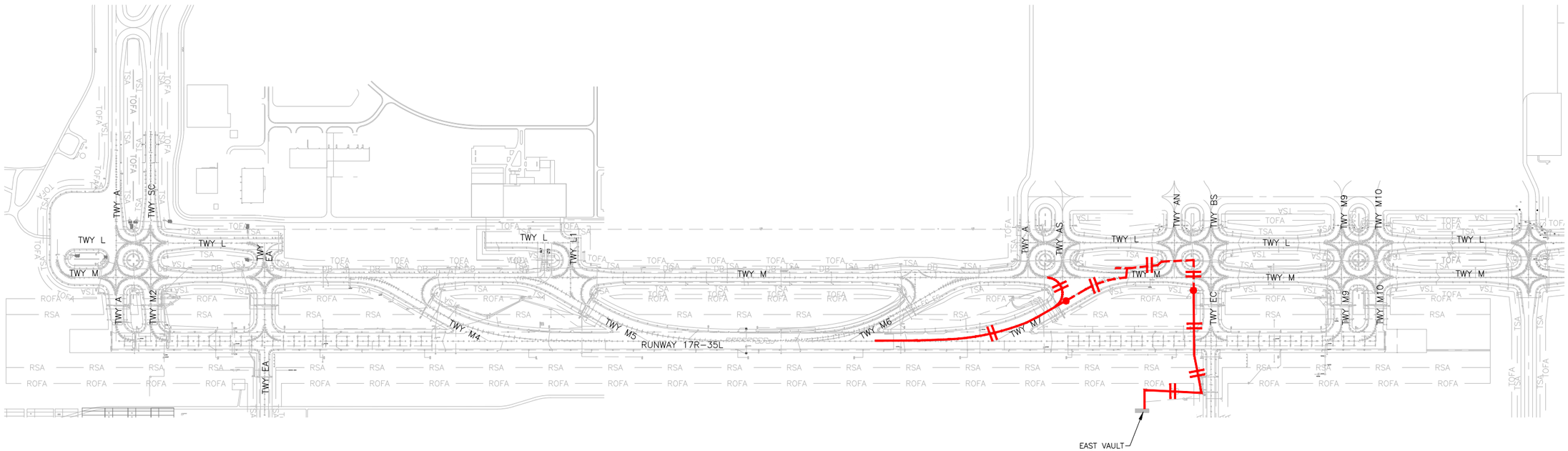

1 – CIRCUIT TM7HC – EXISTING & NEW
NOT TO SCALE

NORTH

COLORADO LICENSED
DORON LEAN
52246
2/15/19
PROFESSIONAL ENGINEER

CITY & COUNTY of DENVER

DENVER INTERNATIONAL AIRPORT

LEAN ENGINEERING

RUNWAY 17R-35L COMPLEX PAVEMENT REHABILITATION PACKAGE 1

ISSUE RECORD

NO.	BY	PURPOSE	DATE	CKD
1	LE	50% DESIGN	09/14/18	DL
2	LE	90% DESIGN	10/26/18	DL
3	LE	BID	12/26/18	DL
4	LE	CONSTRUCTION	2/15/19	DL

SCALE: AS INDICATED

DATE: FEBRUARY 15, 2019

DRAWN BY: KV

CHECKED BY: JA

FAA AIP NO:

WORK BREAKDOWN NO.

DESIGN CONTRACT NO. 201735882

CONST. CONTRACT NO. 201846271

VOLUME NO.

SHEET TITLE

CIRCUIT MAP
CIRCUIT TM7HC

SHEET NO.
EL824
324 OF 396

CADD FILE NO.
_201735882-B1EELD-4298

b:\dropbox (lean photometrics)\active projects\157180ia rah den 17r-35l reconstruction\01 drawings\working drawings\Sheets_201735882-B1EELD-4298.dwg Feb 12, 2019 - 5:30pm Kat

NOTES:

1. SEE SHEETS E-001 FOR GENERAL ELECTRICAL NOTES.

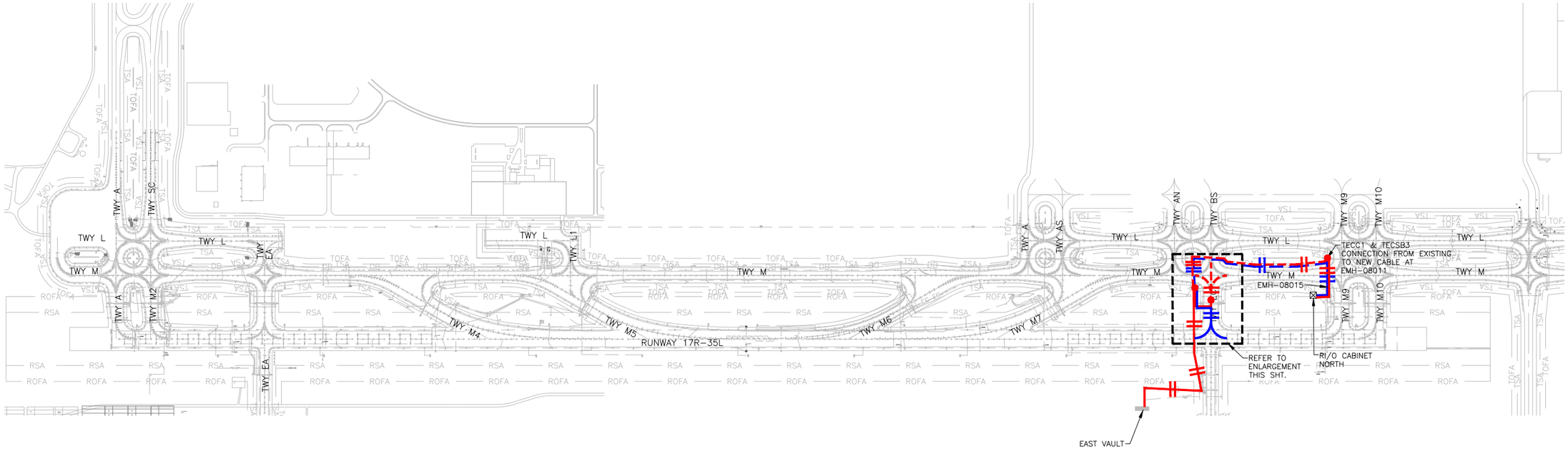

1 – CIRCUIT TECC1 (HOMERUN), & TECSB3 – EXISTING & NEW
NOT TO SCALE

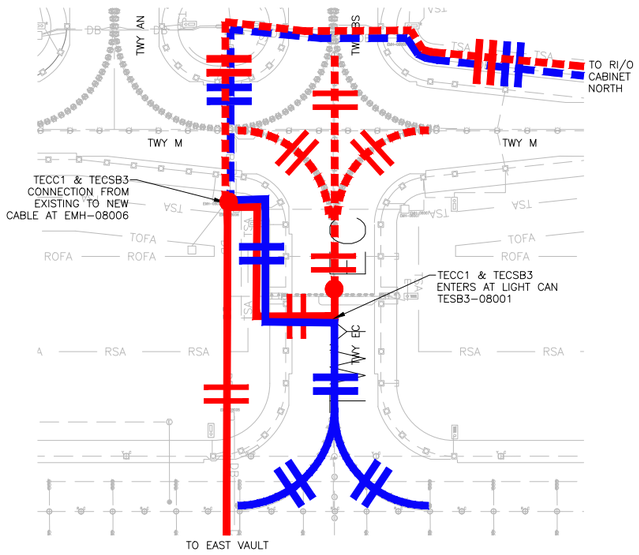

2 – CIRCUIT ENLARGEMENT
NOT TO SCALE

CABLE LEGEND

- DENOTES NEW TECC1 CABLE WITH 2-1/C
- DENOTES NEW TECC1 CABLE WITH 1-1/C
- DENOTES EXISTING TECC1 CABLE WITH 2-1/C
- DENOTES EXISTING TECC1 CABLE WITH 1-1/C
- DENOTES CONNECTION FROM EXISTING TECC1 CABLE TO NEW CABLE
- DENOTES NEW TECSB3 CABLE WITH 2-1/C
- DENOTES NEW TECSB3 CABLE WITH 1-1/C
- DENOTES EXISTING TECSB3 CABLE WITH 2-1/C
- DENOTES EXISTING TECSB3 CABLE WITH 1-1/C
- DENOTES CONNECTION FROM EXISTING TECSB3 CABLE TO NEW CABLE

NORTH

COLORADO LICENSED PROFESSIONAL ENGINEER
DORON LEAN
52246
2/15/19

CITY & COUNTY of DENVER

DENVER INTERNATIONAL AIRPORT

LEAN ENGINEERING

RUNWAY 17R-35L COMPLEX PAVEMENT REHABILITATION PACKAGE 1

ISSUE RECORD

NO.	BY	PURPOSE	DATE	CKD
1	LE	50% DESIGN	09/14/18	DL
2	LE	90% DESIGN	10/26/18	DL
3	LE	BID	12/26/18	DL
4	LE	CONSTRUCTION	2/15/19	DL

SCALE: AS INDICATED

DATE: FEBRUARY 15, 2019

DRAWN BY: KV

CHECKED BY: JA

FAA AIP NO:

WORK BREAKDOWN NO.

DESIGN CONTRACT NO. 201735882

CONST. CONTRACT NO. 201846271

VOLUME NO.

SHEET TITLE: CIRCUIT MAP CIRCUIT TECC1 & TECSB3

SHEET NO. EL825
325 OF 396

CADD FILE NO. _201735882-B1EELD-4298

D:\dropbox (lean photometrics)\active projects\1157180ia rah den 17r-35l reconstruction\01 drawings\working drawings\Sheets_201735882-B1EELD-4298.dwg Feb 12, 2019 - 5:30pm Kat

NOTES:

1. SEE SHEETS E-001 FOR GENERAL ELECTRICAL NOTES.

CABLE LEGEND

- DENOTES NEW CABLE WITH 2-1/C
- DENOTES NEW CABLE WITH 1-1/C
- DENOTES EXISTING CABLE WITH 2-1/C
- DENOTES EXISTING CABLE WITH 1-1/C
- DENOTES CONNECTION FROM EXISTING CABLE TO NEW CABLE

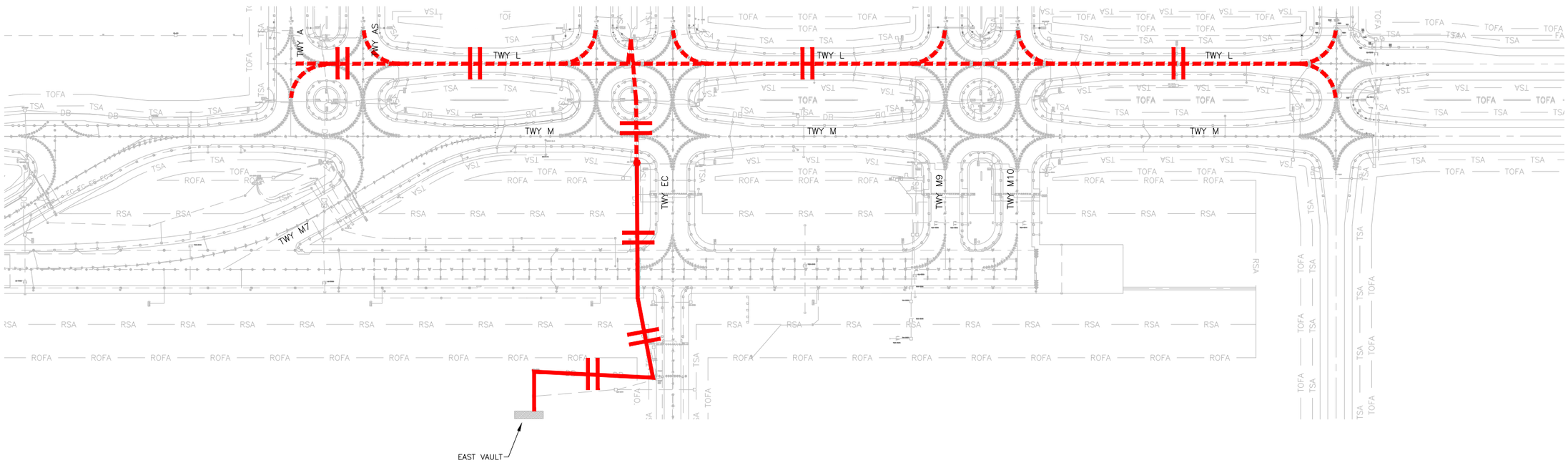

1 / – CIRCUIT TLC1 – EXISTING & NEW
NOT TO SCALE

COLORADO LICENSED
DORON LEA
52246
2/15/19
PROFESSIONAL ENGINEER

CITY & COUNTY of DENVER

DENVER INTERNATIONAL AIRPORT

LEAN ENGINEERING

RUNWAY 17R-35L COMPLEX PAVEMENT REHABILITATION PACKAGE 1

ISSUE RECORD

NO.	BY	PURPOSE	DATE	CKD
1	LE	50% DESIGN	09/14/18	DL
2	LE	90% DESIGN	10/26/18	DL
3	LE	BID	12/26/18	DL
4	LE	CONSTRUCTION	2/15/19	DL

SCALE: AS INDICATED

DATE: FEBRUARY 15, 2019

DRAWN BY: KV

CHECKED BY: JA

FAA AIP NO:

WORK BREAKDOWN NO.

DESIGN CONTRACT NO. 201735882

CONST. CONTRACT NO. 201846271

VOLUME NO.

SHEET TITLE

CIRCUIT MAP
CIRCUIT TLC1

SHEET NO. EL826
326 OF 396

CADD FILE NO. _201735882-B1EELD-4298

D:\dropbox (lean photometrics)\active projects\1571801a rah den 17r-35l reconstruction\01 drawings\working drawings\Sheets_201735882-B1EELD-4298.dwg Feb 12, 2019 - 5:30pm Kat

NOTES:

1. SEE SHEETS E-001 FOR GENERAL ELECTRICAL NOTES.

CABLE LEGEND

- DENOTES NEW CABLE WITH 2-1/C
- DENOTES NEW CABLE WITH 1-1/C
- DENOTES EXISTING CABLE WITH 2-1/C
- DENOTES EXISTING CABLE WITH 1-1/C
- DENOTES CONNECTION FROM EXISTING CABLE TO NEW CABLE

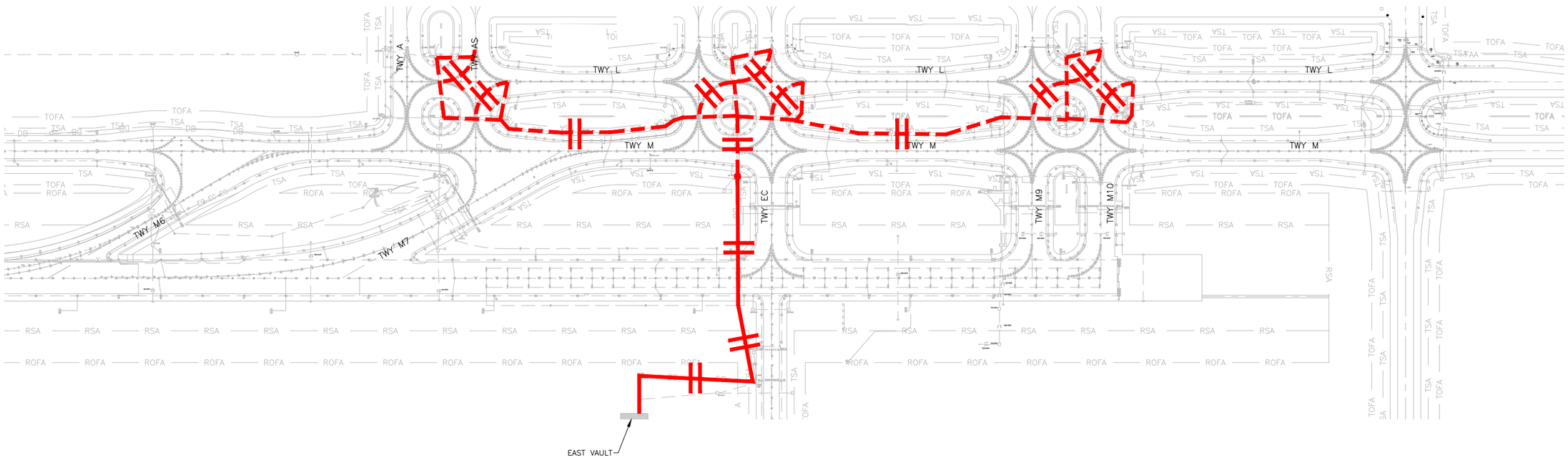

1 / – CIRCUIT TLC2 – EXISTING & NEW
NOT TO SCALE

NORTH

COLORADO LICENSED
DORON LEAN
52246
2/15/19
PROFESSIONAL ENGINEER

CITY & COUNTY of DENVER

DENVER INTERNATIONAL AIRPORT

LEAN ENGINEERING

RUNWAY 17R-35L COMPLEX PAVEMENT REHABILITATION PACKAGE 1

ISSUE RECORD

NO.	BY	PURPOSE	DATE	CKD
1	LE	50% DESIGN	09/14/18	DL
2	LE	90% DESIGN	10/26/18	DL
3	LE	BID	12/26/18	DL
4	LE	CONSTRUCTION	2/15/19	DL

SCALE: AS INDICATED

DATE: FEBRUARY 15, 2019

DRAWN BY: KV

CHECKED BY: JA

FAA AIP NO:

WORK BREAKDOWN NO.

DESIGN CONTRACT NO. 201735882

CONST. CONTRACT NO. 201846271

VOLUME NO.

SHEET TITLE

CIRCUIT MAP
CIRCUIT TLC2

SHEET NO. EL827

CADD FILE NO. _201735882-B1EELD-4298

D:\dropbox (lean photometrics)\active projects\157180ia rah den 17r-35l reconstruction\01 drawings\working drawings\Sheets_201735882-B1EELD-4298.dwg Feb 12, 2019 - 5:30pm Kat

NOTES:

1. SEE SHEETS E-001 FOR GENERAL ELECTRICAL NOTES.

CABLE LEGEND

- DENOTES NEW CABLE WITH 2-1/C
- DENOTES NEW CABLE WITH 1-1/C
- DENOTES EXISTING CABLE WITH 2-1/C
- DENOTES EXISTING CABLE WITH 1-1/C
- DENOTES CONNECTION FROM EXISTING CABLE TO NEW CABLE

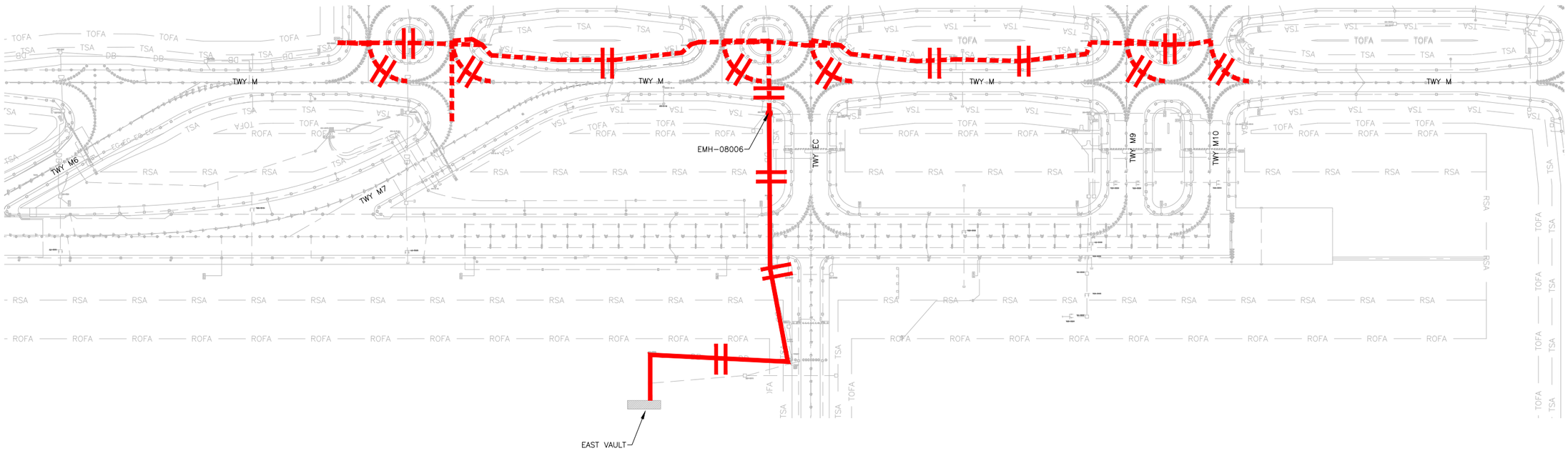

1 / – CIRCUIT TLC4 – EXISTING & NEW
NOT TO SCALE

NORTH

COLORADO LICENSED
AARON LEA
52246
2/15/19
PROFESSIONAL ENGINEER

CITY & COUNTY of DENVER

DENVER INTERNATIONAL AIRPORT

LEAN ENGINEERING

RUNWAY 17R-35L COMPLEX PAVEMENT REHABILITATION PACKAGE 1

ISSUE RECORD

NO.	BY	PURPOSE	DATE	CKD
1	LE	50% DESIGN	09/14/18	DL
2	LE	90% DESIGN	10/26/18	DL
3	LE	BID	12/26/18	DL
4	LE	CONSTRUCTION	2/15/19	DL

SCALE: AS INDICATED

DATE: FEBRUARY 15, 2019

DRAWN BY: KV

CHECKED BY: JA

FAA AIP NO:

WORK BREAKDOWN NO.

DESIGN CONTRACT NO. 201735882

CONST. CONTRACT NO. 201846271

VOLUME NO.

SHEET TITLE

CIRCUIT MAP
CIRCUIT TLC4

SHEET NO. EL828
328 OF 396

CADD FILE NO. _201735882-B1EELD-4298

D:\dropbox (lean photometrics)\active projects\1571801a rah den 17r-35l reconstruction\01 drawings\working drawings\Sheets_201735882-B1EELD-4298.dwg Feb 12, 2019 - 5:31pm Kat

NOTES:

1. SEE SHEETS E-001 FOR GENERAL ELECTRICAL NOTES.

CABLE LEGEND

- DENOTES NEW CABLE WITH 2-1/C
- DENOTES NEW CABLE WITH 1-1/C
- DENOTES EXISTING CABLE WITH 2-1/C
- DENOTES EXISTING CABLE WITH 1-1/C
- DENOTES CONNECTION FROM EXISTING CABLE TO NEW CABLE

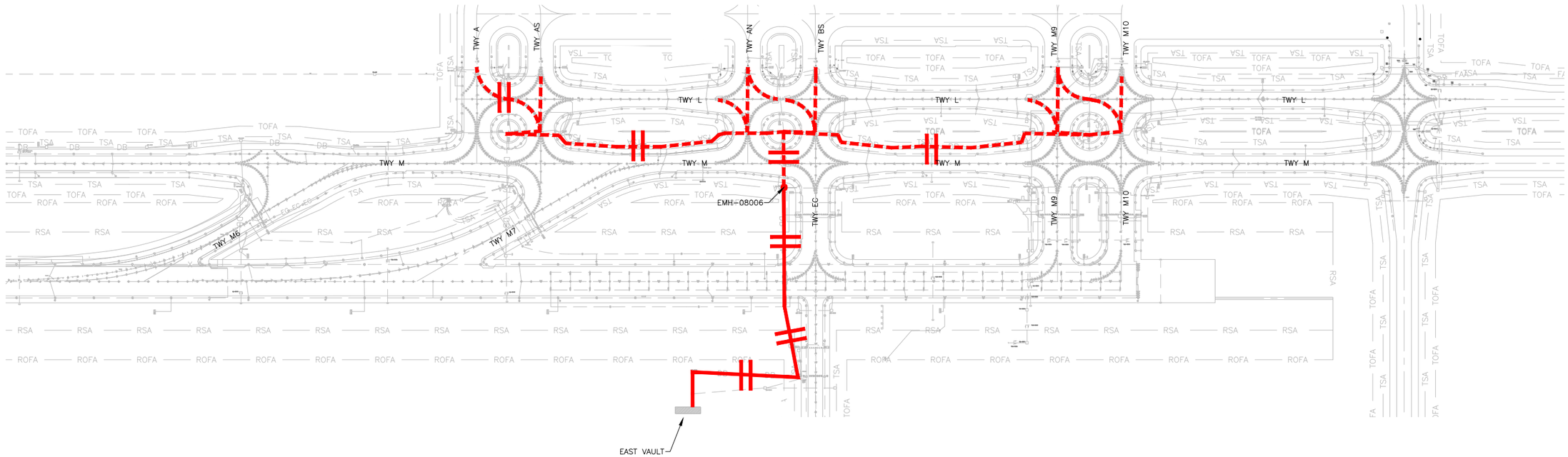

1 / – CIRCUIT TLC5 – EXISTING & NEW
NOT TO SCALE

NORTH

COLORADO LICENSED
DORON LEAN
52246
2/15/19
PROFESSIONAL ENGINEER

CITY & COUNTY of DENVER

DENVER INTERNATIONAL AIRPORT

LEAN ENGINEERING

RUNWAY 17R-35L COMPLEX PAVEMENT REHABILITATION PACKAGE 1

ISSUE RECORD

NO.	BY	PURPOSE	DATE	CKD
1	LE	50% DESIGN	09/14/18	DL
2	LE	90% DESIGN	10/26/18	DL
3	LE	BID	12/26/18	DL
4	LE	CONSTRUCTION	2/15/19	DL

SCALE: AS INDICATED

DATE: FEBRUARY 15, 2019

DRAWN BY: KV

CHECKED BY: JA

FAA AIP NO:

WORK BREAKDOWN NO.

DESIGN CONTRACT NO. 201735882

CONST. CONTRACT NO. 201846271

VOLUME NO.

SHEET TITLE

CIRCUIT MAP
CIRCUIT TLC5

SHEET NO. EL829
329 OF 396

CADD FILE NO. _201735882-B1EELD-4298

D:\dropbox (lean photometrics)\active projects\157180ia rah den 17r-35l reconstruction\01 drawings\working drawings\Sheets_201735882-B1EELD-4298.dwg Feb 12, 2019 - 5:31pm Kat

NOTES:

1. SEE SHEETS E-001 FOR GENERAL ELECTRICAL NOTES.

CABLE LEGEND

- DENOTES NEW CABLE WITH 2-1/C
- DENOTES NEW CABLE WITH 1-1/C
- DENOTES EXISTING CABLE WITH 2-1/C
- DENOTES EXISTING CABLE WITH 1-1/C
- DENOTES CONNECTION FROM EXISTING CABLE TO NEW CABLE

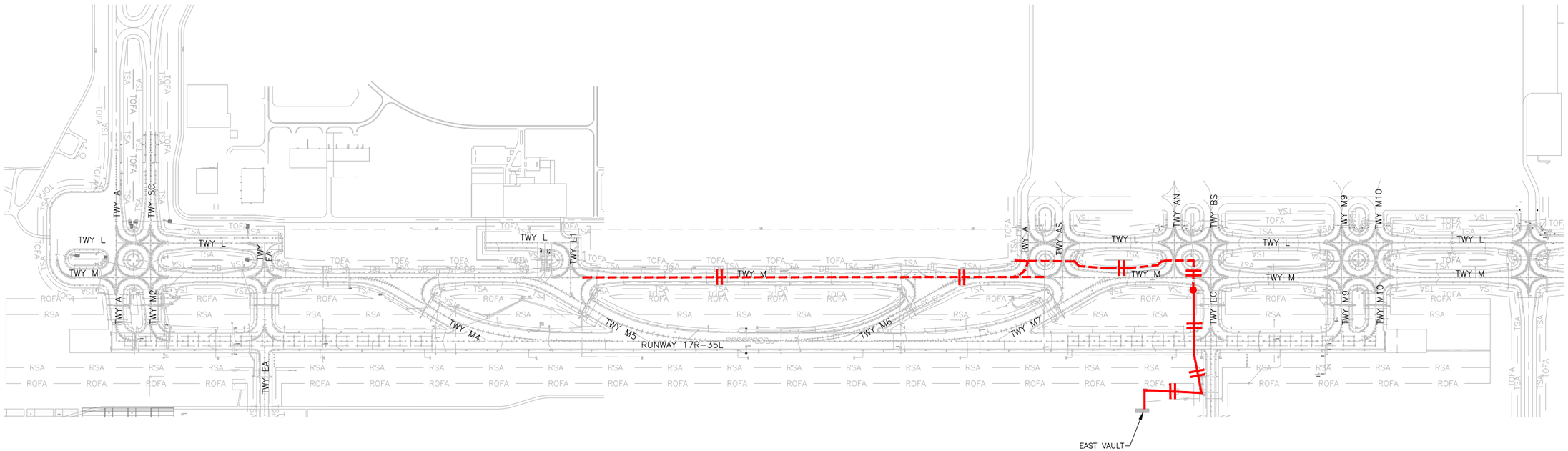

1 / – CIRCUIT TMC2 – EXISTING & NEW
NOT TO SCALE

NORTH

COLORADO LICENSED
DORON LEAN
52246
2/15/19
PROFESSIONAL ENGINEER

CITY & COUNTY of DENVER

DENVER INTERNATIONAL AIRPORT

LEAN ENGINEERING

RUNWAY 17R-35L COMPLEX PAVEMENT REHABILITATION PACKAGE 1

ISSUE RECORD

NO.	BY	PURPOSE	DATE	CKD
1	LE	50% DESIGN	09/14/18	DL
2	LE	90% DESIGN	10/26/18	DL
3	LE	BID	12/26/18	DL
4	LE	CONSTRUCTION	2/15/19	DL

SCALE: AS INDICATED

DATE: FEBRUARY 15, 2019

DRAWN BY: KV

CHECKED BY: JA

FAA AIP NO:

WORK BREAKDOWN NO.

DESIGN CONTRACT NO. 201735882

CONST. CONTRACT NO. 201846271

VOLUME NO.

SHEET TITLE

CIRCUIT MAP
CIRCUIT TMC2

SHEET NO. EL830
330 OF 396

CADD FILE NO. _201735882-B1EELD-4298

b:\dropbox (lean photometrics)\active projects\1571801a rah den 17r-35l reconstruction\01 drawings\working drawings\Sheets_201735882-B1EELD-4298.dwg Feb 12, 2019 - 5:31pm Kat

NOTES:

1. SEE SHEETS E-001 FOR GENERAL ELECTRICAL NOTES.

CABLE LEGEND

- DENOTES NEW CABLE WITH 2-1/C
- DENOTES NEW CABLE WITH 1-1/C
- DENOTES EXISTING CABLE WITH 2-1/C
- DENOTES EXISTING CABLE WITH 1-1/C
- DENOTES CONNECTION FROM EXISTING CABLE TO NEW CABLE

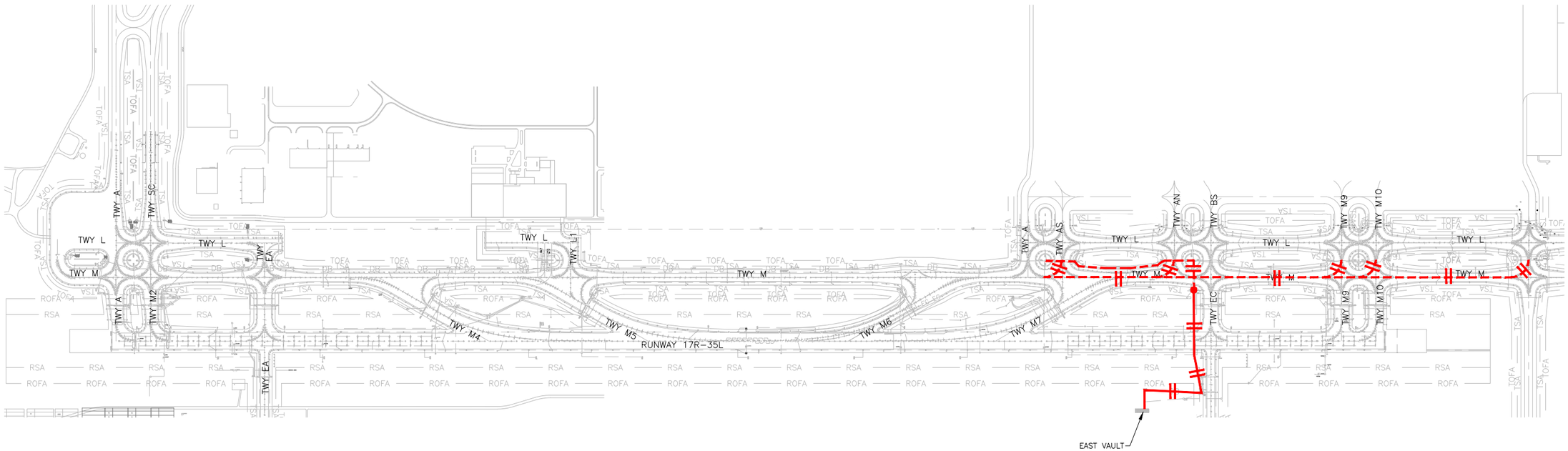

1 CIRCUIT TMC3 – EXISTING & NEW
NOT TO SCALE

NORTH

COLORADO LICENSED
DORON LEAN
52246
2/15/19
PROFESSIONAL ENGINEER

CITY & COUNTY of DENVER

DENVER INTERNATIONAL AIRPORT

LEAN ENGINEERING

RUNWAY 17R-35L COMPLEX PAVEMENT REHABILITATION PACKAGE 1

ISSUE RECORD

NO.	BY	PURPOSE	DATE	CKD
1	LE	50% DESIGN	09/14/18	DL
2	LE	90% DESIGN	10/26/18	DL
3	LE	BID	12/26/18	DL
4	LE	CONSTRUCTION	2/15/19	DL

SCALE: AS INDICATED

DATE: FEBRUARY 15, 2019

DRAWN BY: KV

CHECKED BY: JA

FAA AIP NO:

WORK BREAKDOWN NO.

DESIGN CONTRACT NO. 201735882

CONST. CONTRACT NO. 201846271

VOLUME NO.

SHEET TITLE

CIRCUIT MAP
CIRCUIT TMC3

SHEET NO. EL831
331 OF 396

CADD FILE NO. _201735882-B1EELD-4298

b:\dropbox (lean photometrics)\active projects\1157180ia rah den 17r-35l reconstruction\01 drawings\working drawings\Sheets_201735882-B1EELD-4298.dwg Feb 12, 2019 - 5:31pm Kat

NOTES:

1. SEE SHEETS E-001 FOR GENERAL ELECTRICAL NOTES.

CABLE LEGEND

- DENOTES NEW CABLE WITH 2-1/C
- DENOTES NEW CABLE WITH 1-1/C
- DENOTES EXISTING CABLE WITH 2-1/C
- DENOTES EXISTING CABLE WITH 1-1/C
- DENOTES CONNECTION FROM EXISTING CABLE TO NEW CABLE

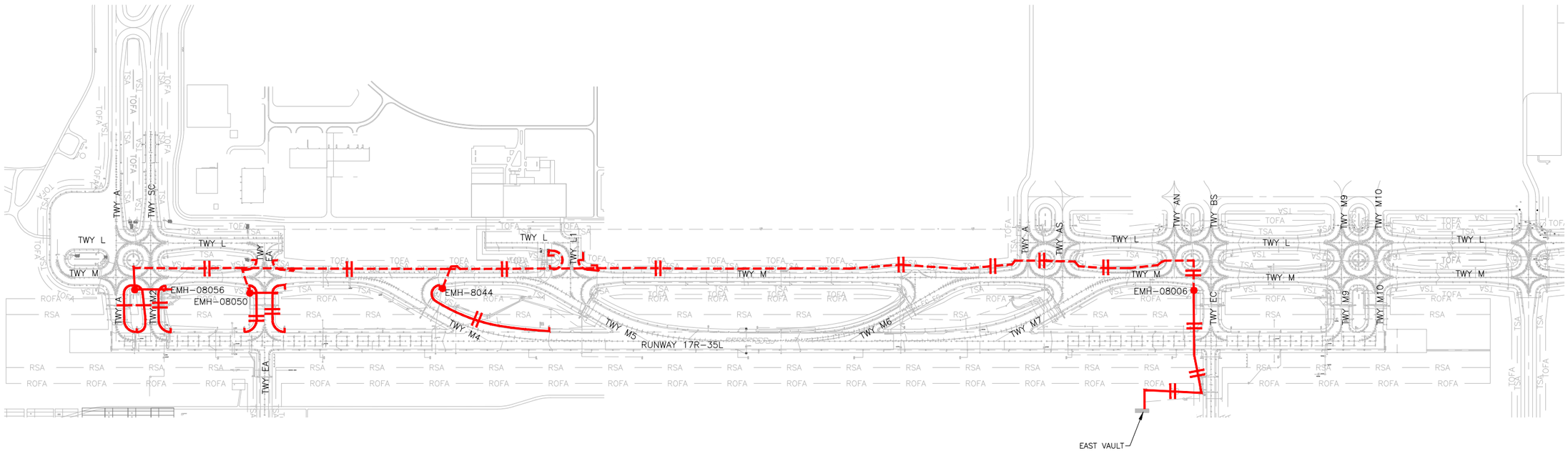

1 CIRCUIT TMS1 – EXISTING & NEW
NOT TO SCALE

NORTH

COLORADO LICENSED
DORON LEAN
52246
2/15/19
PROFESSIONAL ENGINEER

CITY & COUNTY of DENVER

DENVER INTERNATIONAL AIRPORT

LEAN ENGINEERING

RUNWAY 17R-35L COMPLEX PAVEMENT REHABILITATION PACKAGE 1

ISSUE RECORD

NO.	BY	PURPOSE	DATE	CKD
1	LE	50% DESIGN	09/14/18	DL
2	LE	90% DESIGN	10/26/18	DL
3	LE	BID	12/26/18	DL
4	LE	CONSTRUCTION	2/15/19	DL

SCALE: AS INDICATED

DATE: FEBRUARY 15, 2019

DRAWN BY: KV

CHECKED BY: JA

FAA AIP NO:

WORK BREAKDOWN NO.

DESIGN CONTRACT NO. 201735882

CONST. CONTRACT NO. 201846271

VOLUME NO.

SHEET TITLE

CIRCUIT MAP
CIRCUIT TMS1

SHEET NO. EL832
332 OF 396

CADD FILE NO. _201735882-B1EELD-4298

D:\dropbox (lean photometrics)\active projects\1571801a rah den 17r-35l reconstruction\01 drawings\working drawings\Sheets_201735882-B1EELD-4298.dwg Feb 12, 2019 - 5:31pm Kat

NOTES:

1. SEE SHEETS E-001 FOR GENERAL ELECTRICAL NOTES.

CABLE LEGEND

- DENOTES NEW CABLE WITH 2-1/C
- DENOTES NEW CABLE WITH 1-1/C
- DENOTES EXISTING CABLE WITH 2-1/C
- DENOTES EXISTING CABLE WITH 1-1/C
- DENOTES CONNECTION FROM EXISTING CABLE TO NEW CABLE

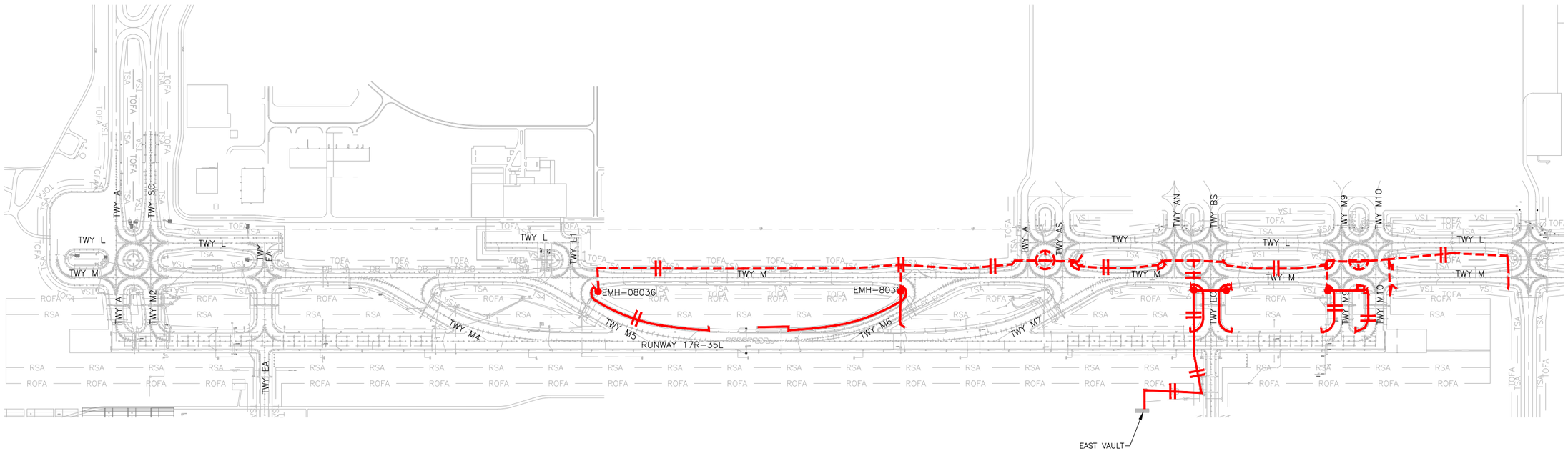

1 – CIRCUIT TMS2 – EXISTING & NEW
NOT TO SCALE

NORTH

COLORADO LICENSED PROFESSIONAL ENGINEER
DORON LEAN
52246
2/15/19

CITY & COUNTY of DENVER

DENVER INTERNATIONAL AIRPORT

LEAN ENGINEERING

RUNWAY 17R-35L COMPLEX PAVEMENT REHABILITATION PACKAGE 1

ISSUE RECORD

NO.	BY	PURPOSE	DATE	CKD
1	LE	50% DESIGN	09/14/18	DL
2	LE	90% DESIGN	10/26/18	DL
3	LE	BID	12/26/18	DL
4	LE	CONSTRUCTION	2/15/19	DL

SCALE: AS INDICATED

DATE: FEBRUARY 15, 2019

DRAWN BY: KV

CHECKED BY: JA

FAA AIP NO:

WORK BREAKDOWN NO.

DESIGN CONTRACT NO. 201735882

CONST. CONTRACT NO. 201846271

VOLUME NO.

SHEET TITLE

CIRCUIT MAP
CIRCUIT TMS2

SHEET NO. EL833
333 OF 396

CADD FILE NO. _201735882-B1EELD-4298

D:\dropbox (lean photometrics)\active projects\1571801a rah den 17r-35l reconstruction\01 drawings\working drawings\Sheets_201735882-B1EELD-4298.dwg Feb 12, 2019 - 5:31pm Kat

NOTES:

1. SEE SHEETS E-001 FOR GENERAL ELECTRICAL NOTES.

CABLE LEGEND

- DENOTES NEW CABLE WITH 2-1/C
- DENOTES NEW CABLE WITH 1-1/C
- DENOTES EXISTING CABLE WITH 2-1/C
- DENOTES EXISTING CABLE WITH 1-1/C
- DENOTES CONNECTION FROM EXISTING CABLE TO NEW CABLE

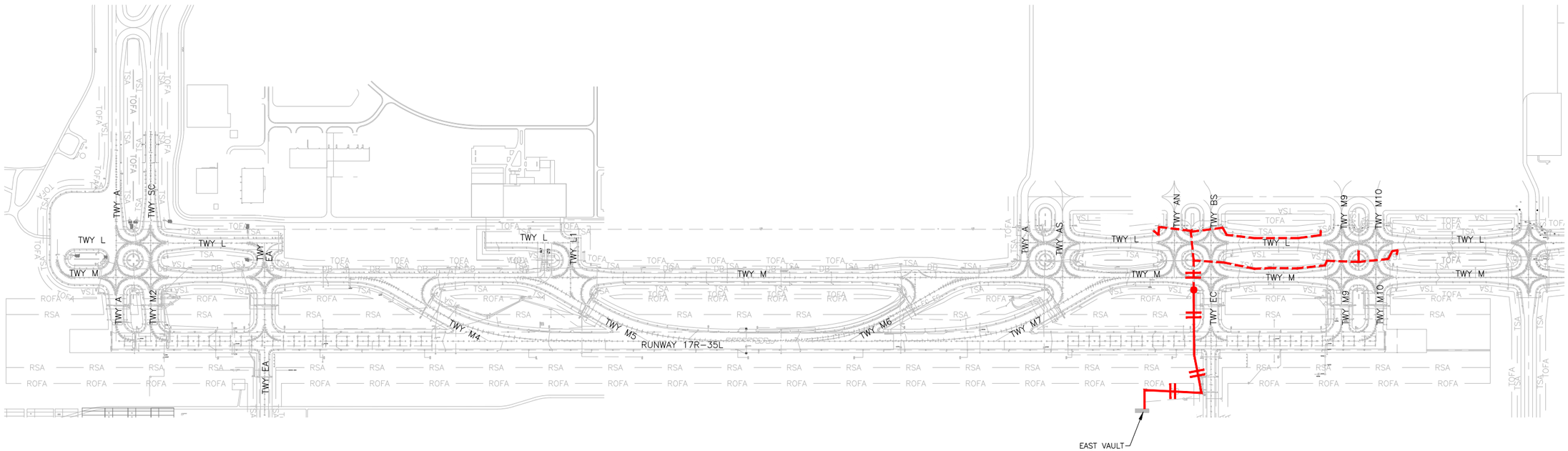

1 CIRCUIT TLKS1 – EXISTING & NEW
NOT TO SCALE

NORTH

COLORADO LICENSED
DORON LEA
52246
2/15/19
PROFESSIONAL ENGINEER

CITY & COUNTY of DENVER

DENVER INTERNATIONAL AIRPORT

LEAN ENGINEERING

RUNWAY 17R-35L COMPLEX PAVEMENT REHABILITATION PACKAGE 1

ISSUE RECORD

NO.	BY	PURPOSE	DATE	CKD
1	LE	50% DESIGN	09/14/18	DL
2	LE	90% DESIGN	10/26/18	DL
3	LE	BID	12/26/18	DL
4	LE	CONSTRUCTION	2/15/19	DL

SCALE: AS INDICATED

DATE: FEBRUARY 15, 2019

DRAWN BY: KV

CHECKED BY: JA

FAA AIP NO:

WORK BREAKDOWN NO.

DESIGN CONTRACT NO. 201735882

CONST. CONTRACT NO. 201846271

VOLUME NO.

SHEET TITLE

CIRCUIT MAP
CIRCUIT TLKS1

SHEET NO. EL834
334 OF 396

CADD FILE NO. _201735882-B1EELD-4298

D:\dropbox (lean photometrics)\active projects\1157180ia rah den 17r-35l reconstruction\01 drawings\working drawings\Sheets_201735882-B1EELD-4298.dwg Feb 12, 2019 - 5:32pm Kat

NOTES:

1. SEE SHEETS E-001 FOR GENERAL ELECTRICAL NOTES.

CABLE LEGEND

- DENOTES NEW CABLE WITH 2-1/C
- DENOTES NEW CABLE WITH 1-1/C
- DENOTES EXISTING CABLE WITH 2-1/C
- DENOTES EXISTING CABLE WITH 1-1/C
- DENOTES CONNECTION FROM EXISTING CABLE TO NEW CABLE

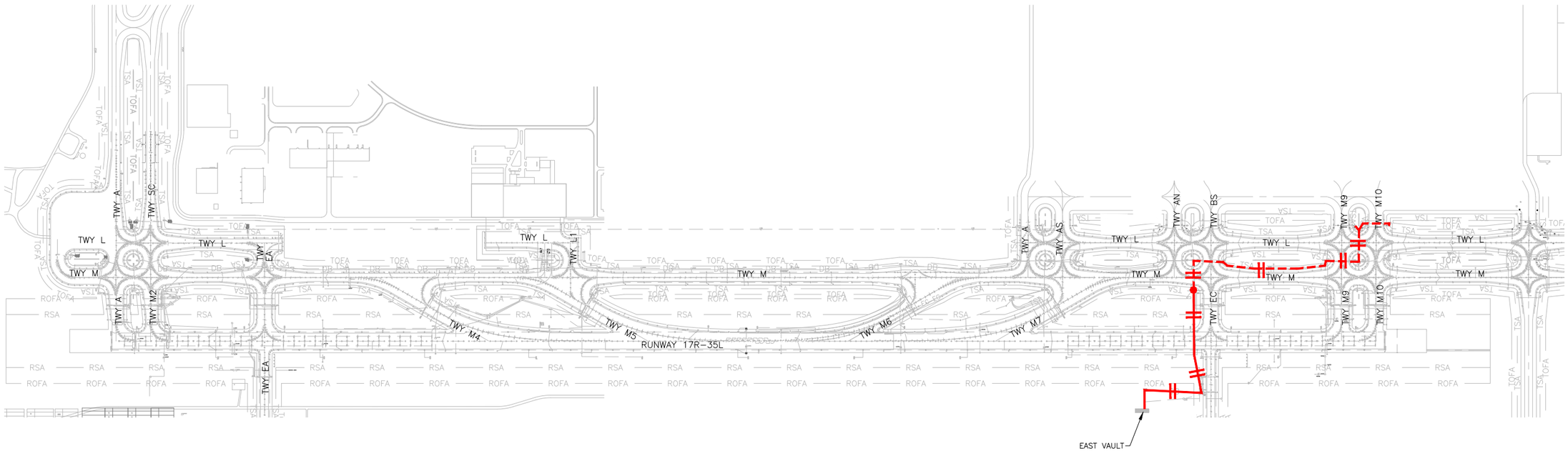

1 CIRCUIT TLS1 – EXISTING & NEW
NOT TO SCALE

NORTH

COLORADO LICENSED
DORON LEAN
52246
2/15/19
PROFESSIONAL ENGINEER

CITY & COUNTY of DENVER

DENVER INTERNATIONAL AIRPORT

LEAN ENGINEERING

RUNWAY 17R-35L COMPLEX PAVEMENT REHABILITATION PACKAGE 1

ISSUE RECORD

NO.	BY	PURPOSE	DATE	CKD
1	LE	50% DESIGN	09/14/18	DL
2	LE	90% DESIGN	10/26/18	DL
3	LE	BID	12/26/18	DL
4	LE	CONSTRUCTION	2/15/19	DL

SCALE: AS INDICATED

DATE: FEBRUARY 15, 2019

DRAWN BY: KV

CHECKED BY: JA

FAA AIP NO:

WORK BREAKDOWN NO.

DESIGN CONTRACT NO. 201735882

CONST. CONTRACT NO. 201846271

VOLUME NO.

SHEET TITLE

CIRCUIT MAP
CIRCUIT TLS1

SHEET NO. EL835
335 OF 396

CADD FILE NO. _201735882-B1EELD-4298

D:\dropbox (lean photometrics)\active projects\1157180ia rah den 17r-35l reconstruction\01 drawings\working drawings\Sheets_201735882-B1EELD-4298.dwg Feb 12, 2019 - 5:32pm Kat

NOTES:

1. SEE SHEETS E-001 FOR GENERAL ELECTRICAL NOTES.

CABLE LEGEND

- DENOTES NEW CABLE WITH 2-1/C
- DENOTES NEW CABLE WITH 1-1/C
- DENOTES EXISTING CABLE WITH 2-1/C
- DENOTES EXISTING CABLE WITH 1-1/C
- DENOTES CONNECTION FROM EXISTING CABLE TO NEW CABLE

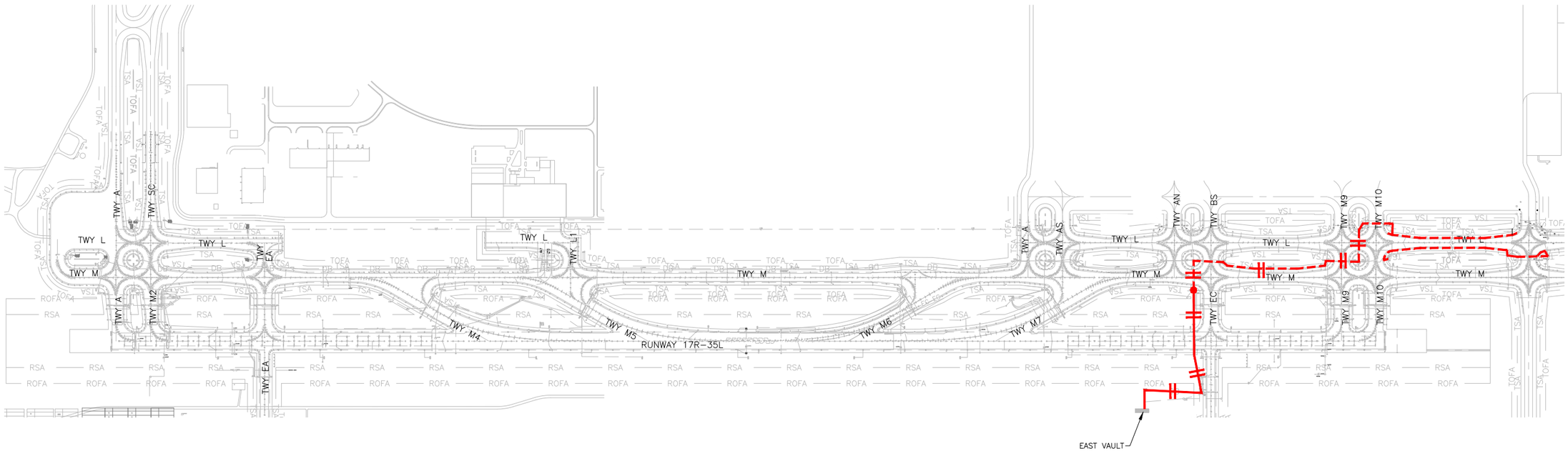

1 CIRCUIT TLE1 – EXISTING & NEW
NOT TO SCALE

NORTH

COLORADO LICENSED
DORON LEAN
52246
2/15/19
PROFESSIONAL ENGINEER

CITY & COUNTY of DENVER

DENVER INTERNATIONAL AIRPORT

LEAN ENGINEERING

RUNWAY 17R-35L COMPLEX PAVEMENT REHABILITATION PACKAGE 1

ISSUE RECORD

NO.	BY	PURPOSE	DATE	CKD
1	LE	50% DESIGN	09/14/18	DL
2	LE	90% DESIGN	10/26/18	DL
3	LE	BID	12/26/18	DL
4	LE	CONSTRUCTION	2/15/19	DL

SCALE: AS INDICATED

DATE: FEBRUARY 15, 2019

DRAWN BY: KV

CHECKED BY: JA

FAA AIP NO:

WORK BREAKDOWN NO.

DESIGN CONTRACT NO. 201735882

CONST. CONTRACT NO. 201846271

VOLUME NO.

SHEET TITLE

CIRCUIT MAP
CIRCUIT TLE1

SHEET NO. EL836
336 OF 396

CADD FILE NO. _201735882-B1EELD-4298

D:\dropbox (lean photometrics)\active projects\1571801a rwy den 17r-35l reconstruction\01 drawings\working drawings\Sheets_201735882-B1EELD-4298.dwg Feb 12, 2019 - 5:32pm Kat

NOTES:

1. SEE SHEETS E-001 FOR GENERAL ELECTRICAL NOTES.

CABLE LEGEND

DENOTES NEW 35LCP1 WITH 2-1/C

DENOTES NEW 35LCP2 WITH 2-1/C

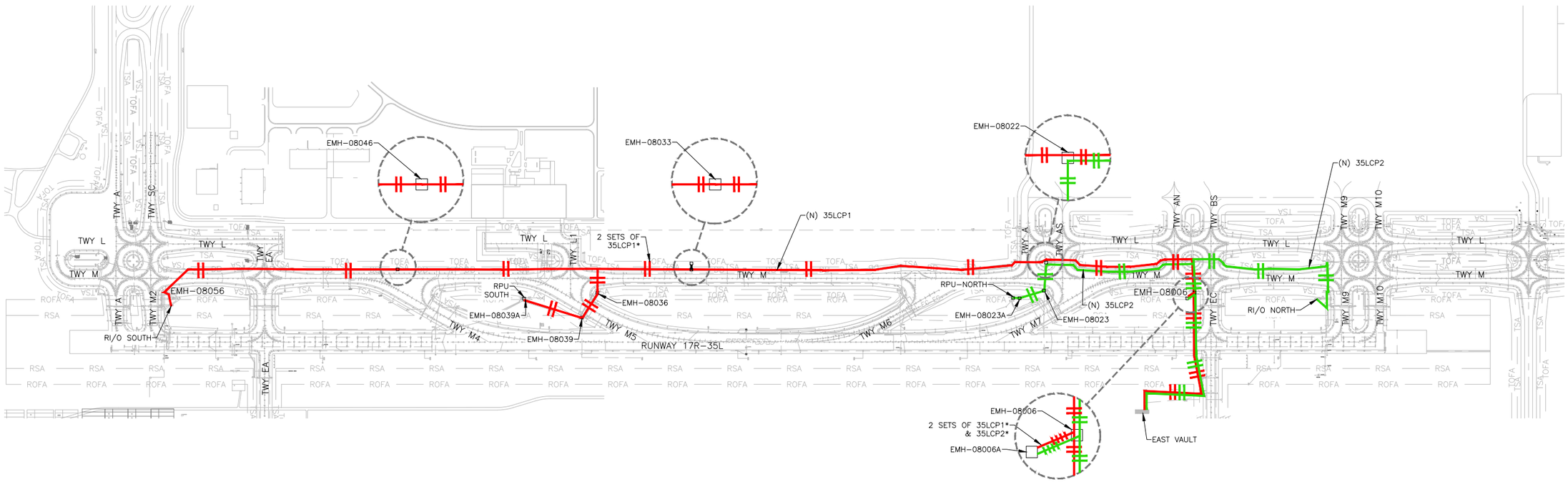

1 CIRCUIT 35LCP1 & 35LCP2 CIRCUITS – NEW
NOT TO SCALE

NORTH

COLORADO LICENSED
BARON LEA
52246
2/15/19
PROFESSIONAL ENGINEER

CITY & COUNTY of DENVER

DENVER INTERNATIONAL AIRPORT

LEAN ENGINEERING

RUNWAY 17R-35L COMPLEX PAVEMENT REHABILITATION PACKAGE 1

ISSUE RECORD

NO.	BY	PURPOSE	DATE	CKD
1	LE	50% DESIGN	09/14/18	DL
2	LE	90% DESIGN	10/26/18	DL
3	LE	BID	12/26/18	DL
4	LE	CONSTRUCTION	2/15/19	DL

SCALE: AS INDICATED

DATE: FEBRUARY 15, 2019

DRAWN BY: KV

CHECKED BY: JA

FAA AIP NO:

WORK BREAKDOWN NO.

DESIGN CONTRACT NO. 201735882

CONST. CONTRACT NO. 201846271

VOLUME NO.

SHEET TITLE

CIRCUIT MAP CIRCUIT 35LCP1 & 35LCP2

SHEET NO. EL837

337 OF 396

CADD FILE NO. _201735882-B1EELD-4298

D:\dropbox (lean photometrics)\active projects\1571801a rah den 17r-35l reconstruction\01 drawings\working drawings\Sheets_201735882-B1EELD-4298.dwg Feb 12, 2019 - 5:32pm Kat

FIXTURE ID	REF. DRAWING	FAA DESIGNATION	FIXTURE TYPE	LENS COLOR	BASE CAN	COMMENTS
17RE-08001	EL108	L-862	BIDIREC.	WHITE/WHITE	L-867B (N)	QUARTZ LIGHT
17RE-08002	EL108	L-862	BIDIREC.	WHITE/WHITE	L-867B (E)	QUARTZ LIGHT
17RE-08003	EL108	L-862	BIDIREC.	WHITE/WHITE	L-867B (N)	QUARTZ LIGHT
17RE-08004	EL108	L-862	BIDIREC.	WHITE/WHITE	L-867B (E)	QUARTZ LIGHT
17RE-08005	EL108	L-862	BIDIREC.	WHITE/WHITE	L-867B (N)	QUARTZ LIGHT
17RE-08006	EL108	L-862	BIDIREC.	WHITE/WHITE	L-867B (E)	QUARTZ LIGHT
17RE-08007	EL109	L-850C	BIDIREC.	WHITE/WHITE	L-868B (N)	QUARTZ LIGHT
17RE-08008	EL109	L-862	BIDIREC.	WHITE/WHITE	L-867B (E)	QUARTZ LIGHT
17RE-08009	EL109	L-850C	BIDIREC.	WHITE/WHITE	L-868B (N)	QUARTZ LIGHT
17RE-08010	EL109	L-862	BIDIREC.	WHITE/WHITE	L-867B (E)	QUARTZ LIGHT
17RE-08011	EL109	L-850C	BIDIREC.	WHITE/WHITE	L-868B (N)	QUARTZ LIGHT
17RE-08012	EL109	L-862	BIDIREC.	WHITE/WHITE	L-867B (E)	QUARTZ LIGHT
17RE-08013	EL109	L-850C	BIDIREC.	WHITE/WHITE	L-868B (N)	QUARTZ LIGHT
17RE-08014	EL109	L-862	BIDIREC.	WHITE/WHITE	L-867B (E)	QUARTZ LIGHT
17RE-08015	EL109	L-862	BIDIREC.	WHITE/WHITE	L-867B (E)	QUARTZ LIGHT
17RE-08016	EL109	L-862	BIDIREC.	WHITE/WHITE	L-867B (E)	QUARTZ LIGHT
17RE-08017	EL110	L-850C	BIDIREC.	WHITE/WHITE	L-868B (N)	QUARTZ LIGHT
17RE-08018	EL110	L-862	BIDIREC.	WHITE/WHITE	L-867B (E)	QUARTZ LIGHT
17RE-08019	EL110	L-850C	BIDIREC.	WHITE/WHITE	L-868B (N)	QUARTZ LIGHT
17RE-08020	EL110	L-862	BIDIREC.	WHITE/WHITE	L-867B (E)	QUARTZ LIGHT
17RE-08021	EL110	L-850C	BIDIREC.	WHITE/WHITE	L-868B (E)	QUARTZ LIGHT
17RE-08022	EL110	L-862	BIDIREC.	WHITE/WHITE	L-867B (E)	QUARTZ LIGHT
17RE-08023	EL110	L-850C	BIDIREC.	WHITE/WHITE	L-868B (E)	QUARTZ LIGHT
17RE-08024	EL110	L-862	BIDIREC.	WHITE/WHITE	L-867B (E)	QUARTZ LIGHT
17RE-08025	EL110	L-850C	BIDIREC.	WHITE/WHITE	L-868B (E)	QUARTZ LIGHT
17RE-08026	EL110	L-862	BIDIREC.	WHITE/WHITE	L-867B (E)	QUARTZ LIGHT
17RE-08027	EL111	L-850C	BIDIREC.	WHITE/WHITE	L-868B (E)	QUARTZ LIGHT
17RE-08028	EL111	L-862	BIDIREC.	WHITE/WHITE	L-867B (E)	QUARTZ LIGHT
17RE-08029	EL111	L-862	BIDIREC.	WHITE/WHITE	L-867B (E)	QUARTZ LIGHT
17RE-08030	EL111	L-862	BIDIREC.	WHITE/WHITE	L-867B (E)	QUARTZ LIGHT
17RE-08031	EL111	L-862	BIDIREC.	WHITE/WHITE	L-867B (E)	QUARTZ LIGHT
17RE-08032	EL111	L-862	BIDIREC.	WHITE/WHITE	L-867B (E)	QUARTZ LIGHT
17RE-08033	EL111	L-862	BIDIREC.	WHITE/WHITE	L-867B (E)	QUARTZ LIGHT
17RE-08034	EL111	L-862	BIDIREC.	WHITE/WHITE	L-867B (E)	QUARTZ LIGHT
17RE-08035	EL111	L-862	BIDIREC.	WHITE/WHITE	L-867B (E)	QUARTZ LIGHT
17RE-08036	EL111	L-862	BIDIREC.	WHITE/WHITE	L-867B (E)	QUARTZ LIGHT
17RE-08037	EL112	L-862	BIDIREC.	WHITE/WHITE	L-867B (E)	QUARTZ LIGHT
17RE-08038	EL112	L-862	BIDIREC.	WHITE/WHITE	L-867B (E)	QUARTZ LIGHT
17RE-08039	EL112	L-862	BIDIREC.	WHITE/YELLOW	L-867B (E)	QUARTZ LIGHT
17RE-08040	EL112	L-862	BIDIREC.	WHITE/YELLOW	L-867B (E)	QUARTZ LIGHT
17RE-08041	EL112	L-862	BIDIREC.	WHITE/YELLOW	L-867B (E)	QUARTZ LIGHT
17RE-08042	EL112	L-862	BIDIREC.	WHITE/YELLOW	L-867B (E)	QUARTZ LIGHT
17RE-08043	EL112	L-850C	BIDIREC.	WHITE/YELLOW	L-868B (N)	QUARTZ LIGHT
17RE-08044	EL112	L-862	BIDIREC.	WHITE/YELLOW	L-867B (E)	QUARTZ LIGHT
17RE-08045	EL112	L-850C	BIDIREC.	WHITE/YELLOW	L-868B (N)	QUARTZ LIGHT
17RE-08046	EL112	L-850C	BIDIREC.	WHITE/YELLOW	L-868B (N)	QUARTZ LIGHT
17RE-08047	EL113	L-862	BIDIREC.	WHITE/YELLOW	L-867B (E)	QUARTZ LIGHT
17RE-08048	EL113	L-862	BIDIREC.	WHITE/YELLOW	L-867B (E)	QUARTZ LIGHT
17RE-08049	EL113	L-862	BIDIREC.	WHITE/YELLOW	L-867B (E)	QUARTZ LIGHT
17RE-08050	EL113	L-862	BIDIREC.	WHITE/YELLOW	L-867B (E)	QUARTZ LIGHT
17RE-08051	EL113	L-862	BIDIREC.	WHITE/YELLOW	L-867B (E)	QUARTZ LIGHT
17RE-08052	EL113	L-862	BIDIREC.	WHITE/YELLOW	L-867B (E)	QUARTZ LIGHT
17RE-08053	EL113	L-862	BIDIREC.	WHITE/YELLOW	L-867B (E)	QUARTZ LIGHT
17RE-08054	EL113	L-862	BIDIREC.	WHITE/YELLOW	L-867B (E)	QUARTZ LIGHT
17RE-08055	EL113	L-862	BIDIREC.	WHITE/YELLOW	L-867B (E)	QUARTZ LIGHT
17RE-08056	EL113	L-862	BIDIREC.	WHITE/YELLOW	L-867B (E)	QUARTZ LIGHT
17RE-08057	EL114	L-850C	BIDIREC.	WHITE/YELLOW	L-868B (N)	QUARTZ LIGHT
17RE-08058	EL114	L-862	BIDIREC.	WHITE/YELLOW	L-867B (E)	QUARTZ LIGHT
17RE-08059	EL114	L-850C	BIDIREC.	WHITE/YELLOW	L-868B (N)	QUARTZ LIGHT
17RE-08060	EL114	L-862	BIDIREC.	WHITE/YELLOW	L-867B (E)	QUARTZ LIGHT
17RE-08061	EL114	L-862E	BIDIREC.	RED/GREEN	L-867B (E)	QUARTZ LIGHT
17RE-08062	EL114	L-862E	BIDIREC.	RED/GREEN	L-867B (E)	QUARTZ LIGHT
17RE-08063	EL114	L-862E	BIDIREC.	RED/GREEN	L-867B (E)	QUARTZ LIGHT
17RE-08064	EL114	L-862E	BIDIREC.	RED/GREEN	L-867B (E)	QUARTZ LIGHT
17RE-08065	EL114	L-862E	BIDIREC.	RED/GREEN	L-867B (E)	QUARTZ LIGHT
17RE-08066	EL114	L-862E	BIDIREC.	RED/GREEN	L-867B (E)	QUARTZ LIGHT
17RE-08067	EL114	L-862E	BIDIREC.	RED/GREEN	L-867B (E)	QUARTZ LIGHT
17RE-08068	EL114	L-862E	BIDIREC.	RED/GREEN	L-867B (E)	QUARTZ LIGHT

NOTES:

1. SEE SHEETS E-001 FOR GENERAL ELECTRICAL NOTES.

SHEET NOTES:

1. FOR (N) BASE CANS ON TWY M6 REFER TO EL900 SERIES. FOR ALL OTHER (N) BASE CANS CONTRACTOR MUST SURVEY (E) BASE CAN LOCATION AND INSTALL (N) BASE CAN AT SAME LOCATION AND ORIENTATION AND ALIGNMENT.
2. ALL LIGHTS MUST BE NEW AND LED U.O.N.
3. FOR ALL LIGHT FIXTURES (NEW AND REINSTALLED), FURNISH AND INSTALL CONNECTORS, SPACER RINGS, FLANGE RING, WITH PAVEMENT DAM, BOLTS, AND WASHERS.
4. FOR NEW LIGHTS, FURNISH AND INSTALL NEW TRANSFORMER SIZE PER MFG. RECOMMENDATIONS. SUPPLY WITH 6.6A PRIMARY/ 6.6A SECONDARY.
5. FOR EXISTING LIGHTS TO BE REMOVED AND REINSTALLED REFER TO SCHEDULE BELOW:

LIGHT TYPE	XFMR TYPE
TWY CTL UNIDIRECTIONAL (LED)	30/45

6. RECORD NUMBER AND DEPTH OF SPACERS.
7. L-868B BASE CAN HEIGHT SHALL BE 22" U.O.N. ON AREA PLANS.
8. L-867B BASE CAN HEIGHT SHALL BE 22" U.O.N. ON AREA PLANS.

ABBREVIATIONS:

BIDIREC. – BIDIRECTIONAL
OMNI – OMNIDIRECTIONAL
UNIDIREC. – UNIDIRECTIONAL
EXT – EXTENSION
(L) – LED (UNLESS OTHERWISE NOTED)
MFG. – MANUFACTURER
(RR) – REMOVE AND REINSTALL
(E) – EXISTING TO BE REUSED
(N) – NEW
N/A – NOT APPLICABLE

COLORADO LICENSED
AARON LEAN
52246
2/15/19
PROFESSIONAL ENGINEER

CITY & COUNTY of DENVER

DENVER INTERNATIONAL AIRPORT

LEAN ENGINEERING

RUNWAY 17R-35L COMPLEX PAVEMENT REHABILITATION PACKAGE 1

ISSUE RECORD

NO.	BY	PURPOSE	DATE	CKD
1	LE	50% DESIGN	09/14/18	DL
2	LE	90% DESIGN	10/26/18	DL
3	LE	BID	12/26/18	DL
4	LE	CONSTRUCTION	2/15/19	DL

SCALE: AS INDICATED
DATE: FEBRUARY 15, 2019
DRAWN BY: KV
CHECKED BY: JA
FAA AIP NO:
WORK BREAKDOWN NO.
DESIGN CONTRACT NO. 201735882
CONST. CONTRACT NO. 201846271
VOLUME NO.
SHEET TITLE: FIXTURE SCHEDULE CIRCUIT 17RE
SHEET NO. EL851

CADD FILE NO. _201735882-B1EELD-6334

D:\dropbox (lean photometrics)\active projects\1571801a rah den 17r-35l reconstruction\01 drawings\working drawings\sheets_201735882-B1EELD-6334.dwg Feb 12, 2019 - 5:32pm Kat

FIXTURE ID	REF. DRAWING	FAA DESIGNATION	FIXTURE TYPE	LENS COLOR	BASE CAN	COMMENTS
35LE-08001	EL102	L-862E	BIDIREC.	GREEN/RED	L-867B (E)	QUARTZ LIGHT
35LE-08002	EL102	L-862E	BIDIREC.	GREEN/RED	L-867B (E)	QUARTZ LIGHT
35LE-08003	EL102	L-862E	BIDIREC.	GREEN/RED	L-867B (E)	QUARTZ LIGHT
35LE-08004	EL102	L-862E	BIDIREC.	GREEN/RED	L-867B (E)	QUARTZ LIGHT
35LE-08005	EL102	L-862E	BIDIREC.	GREEN/RED	L-867B (E)	QUARTZ LIGHT
35LE-08006	EL102	L-862E	BIDIREC.	GREEN/RED	L-867B (E)	QUARTZ LIGHT
35LE-08007	EL102	L-862E	BIDIREC.	GREEN/RED	L-867B (E)	QUARTZ LIGHT
35LE-08008	EL102	L-862E	BIDIREC.	GREEN/RED	L-867B (E)	QUARTZ LIGHT
35LE-08009	EL102	L-850C	BIDIREC.	WHITE/YELLOW	L-868B (E)	QUARTZ LIGHT
35LE-08010	EL102	L-862	BIDIREC.	WHITE/YELLOW	L-867B (E)	QUARTZ LIGHT
35LE-08011	EL102	L-850C	BIDIREC.	WHITE/YELLOW	L-868B (N)	QUARTZ LIGHT
35LE-08012	EL102	L-862	BIDIREC.	WHITE/YELLOW	L-867B (E)	QUARTZ LIGHT
35LE-08013	EL102	L-862	BIDIREC.	WHITE/YELLOW	L-867B (E)	QUARTZ LIGHT
35LE-08014	EL102	L-862	BIDIREC.	WHITE/YELLOW	L-867B (E)	QUARTZ LIGHT
35LE-08015	EL102	L-862	BIDIREC.	WHITE/YELLOW	L-867B (E)	QUARTZ LIGHT
35LE-08016	EL102	L-862	BIDIREC.	WHITE/YELLOW	L-867B (E)	QUARTZ LIGHT
35LE-08017	EL103	L-862	BIDIREC.	WHITE/YELLOW	L-867B (E)	QUARTZ LIGHT
35LE-08018	EL103	L-862	BIDIREC.	WHITE/YELLOW	L-867B (E)	QUARTZ LIGHT
35LE-08019	EL103	L-862	BIDIREC.	WHITE/YELLOW	L-867B (E)	QUARTZ LIGHT
35LE-08020	EL103	L-862	BIDIREC.	WHITE/YELLOW	L-867B (E)	QUARTZ LIGHT
35LE-08021	EL103	L-850C	BIDIREC.	WHITE/YELLOW	L-868B (N)	QUARTZ LIGHT
35LE-08022	EL103	L-850C	BIDIREC.	WHITE/YELLOW	L-868B (N)	QUARTZ LIGHT
35LE-08023	EL103	L-850C	BIDIREC.	WHITE/YELLOW	L-868B (N)	QUARTZ LIGHT
35LE-08024	EL103	L-862	BIDIREC.	WHITE/YELLOW	L-867B (E)	QUARTZ LIGHT
35LE-08025	EL103	L-862	BIDIREC.	WHITE/YELLOW	L-867B (E)	QUARTZ LIGHT
35LE-08026	EL103	L-862	BIDIREC.	WHITE/YELLOW	L-867B (E)	QUARTZ LIGHT
35LE-08027	EL104	L-862	BIDIREC.	WHITE/YELLOW	L-867B (E)	QUARTZ LIGHT
35LE-08028	EL104	L-862	BIDIREC.	WHITE/YELLOW	L-867B (E)	QUARTZ LIGHT
35LE-08029	EL104	L-862	BIDIREC.	WHITE/YELLOW	L-867B (E)	QUARTZ LIGHT
35LE-08030	EL104	L-862	BIDIREC.	WHITE/YELLOW	L-867B (E)	QUARTZ LIGHT
35LE-08031	EL104	L-862	BIDIREC.	WHITE/WHITE	L-867B (E)	QUARTZ LIGHT
35LE-08032	EL104	L-862	BIDIREC.	WHITE/WHITE	L-867B (E)	QUARTZ LIGHT
35LE-08033	EL104	L-862	BIDIREC.	WHITE/WHITE	L-867B (E)	QUARTZ LIGHT
35LE-08034	EL104	L-862	BIDIREC.	WHITE/WHITE	L-867B (E)	QUARTZ LIGHT
35LE-08035	EL104	L-862	BIDIREC.	WHITE/WHITE	L-867B (E)	QUARTZ LIGHT
35LE-08036	EL104	L-862	BIDIREC.	WHITE/WHITE	L-867B (E)	QUARTZ LIGHT
35LE-08037	EL105	L-862	BIDIREC.	WHITE/WHITE	L-867B (E)	QUARTZ LIGHT
35LE-08038	EL105	L-862	BIDIREC.	WHITE/WHITE	L-867B (E)	QUARTZ LIGHT
35LE-08039	EL105	L-862	BIDIREC.	WHITE/WHITE	L-867B (E)	QUARTZ LIGHT
35LE-08040	EL105	L-862	BIDIREC.	WHITE/WHITE	L-867B (E)	QUARTZ LIGHT
35LE-08041	EL105	L-850C	BIDIREC.	WHITE/WHITE	L-868B (N)	QUARTZ LIGHT
35LE-08042	EL105	L-862	BIDIREC.	WHITE/WHITE	L-867B (E)	QUARTZ LIGHT
35LE-08043	EL105	L-850C	BIDIREC.	WHITE/WHITE	L-868B (N)	QUARTZ LIGHT
35LE-08044	EL105	L-862	BIDIREC.	WHITE/WHITE	L-867B (E)	QUARTZ LIGHT
35LE-08045	EL105	L-850C	BIDIREC.	WHITE/WHITE	L-868B (N)	QUARTZ LIGHT
35LE-08046	EL105	L-862	BIDIREC.	WHITE/WHITE	L-867B (E)	QUARTZ LIGHT
35LE-08047	EL106	L-850C	BIDIREC.	WHITE/WHITE	L-868B (N)	QUARTZ LIGHT
35LE-08048	EL106	L-862	BIDIREC.	WHITE/WHITE	L-867B (E)	QUARTZ LIGHT
35LE-08049	EL106	L-850C	BIDIREC.	WHITE/WHITE	L-868B (N)	QUARTZ LIGHT
35LE-08050	EL106	L-862	BIDIREC.	WHITE/WHITE	L-867B (E)	QUARTZ LIGHT
35LE-08051	EL106	L-862	BIDIREC.	WHITE/WHITE	L-867B (E)	QUARTZ LIGHT
35LE-08052	EL106	L-862	BIDIREC.	WHITE/WHITE	L-867B (E)	QUARTZ LIGHT
35LE-08053	EL106	L-862	BIDIREC.	WHITE/WHITE	L-867B (E)	QUARTZ LIGHT
35LE-08054	EL106	L-862	BIDIREC.	WHITE/WHITE	L-867B (E)	QUARTZ LIGHT
35LE-08055	EL107	L-850C	BIDIREC.	WHITE/WHITE	L-868B (N)	QUARTZ LIGHT
35LE-08056	EL107	L-862	BIDIREC.	WHITE/WHITE	L-867B (E)	QUARTZ LIGHT
35LE-08057	EL107	L-850C	BIDIREC.	WHITE/WHITE	L-868B (N)	QUARTZ LIGHT
35LE-08058	EL107	L-862	BIDIREC.	WHITE/WHITE	L-867B (E)	QUARTZ LIGHT
35LE-08059	EL107	L-850C	BIDIREC.	WHITE/WHITE	L-868B (N)	QUARTZ LIGHT
35LE-08060	EL107	L-862	BIDIREC.	WHITE/WHITE	L-867B (E)	QUARTZ LIGHT
35LE-08061	EL107	L-850C	BIDIREC.	WHITE/WHITE	L-868B (N)	QUARTZ LIGHT
35LE-08062	EL107	L-862	BIDIREC.	WHITE/WHITE	L-867B (E)	QUARTZ LIGHT
35LE-08063	EL107	L-850C	BIDIREC.	WHITE/WHITE	L-868B (N)	QUARTZ LIGHT
35LE-08064	EL107	L-862	BIDIREC.	WHITE/WHITE	L-867B (E)	QUARTZ LIGHT
35LE-08065	EL108	L-850C	BIDIREC.	WHITE/WHITE	L-868B (N)	QUARTZ LIGHT
35LE-08066	EL108	L-862	BIDIREC.	WHITE/WHITE	L-867B (E)	QUARTZ LIGHT
35LE-08067	EL108	L-862	BIDIREC.	WHITE/WHITE	L-867B (E)	QUARTZ LIGHT
35LE-08068	EL108	L-862	BIDIREC.	WHITE/WHITE	L-867B (E)	QUARTZ LIGHT

NOTES:

1. SEE SHEETS E-001 FOR GENERAL ELECTRICAL NOTES.

SHEET NOTES:

1. FOR (N) BASE CANS ON TWY M6 REFER TO EL900 SERIES. FOR ALL OTHER (N) BASE CANS CONTRACTOR MUST SURVEY (E) BASE CAN LOCATION AND INSTALL (N) BASE CAN AT SAME LOCATION AND ORIENTATION AND ALIGNMENT.
2. ALL LIGHTS MUST BE NEW AND LED U.O.N.
3. FOR ALL LIGHT FIXTURES (NEW AND REINSTALLED), FURNISH AND INSTALL CONNECTORS, SPACER RINGS, FLANGE RING, WITH PAVEMENT DAM, BOLTS, AND WASHERS.
4. FOR NEW LIGHTS, FURNISH AND INSTALL NEW TRANSFORMER SIZE PER MFG. RECOMMENDATIONS. SUPPLY WITH 6.6A PRIMARY/ 6.6A SECONDARY.
5. FOR EXISTING LIGHTS TO BE REMOVED AND REINSTALLED REFER TO SCHEDULE BELOW:

LIGHT TYPE	XFMR TYPE
TWY CTL UNIDIRECTIONAL (LED)	30/45

6. RECORD NUMBER AND DEPTH OF SPACERS.
7. L-868B BASE CAN HEIGHT SHALL BE 22" U.O.N. ON AREA PLANS.
8. L-867B BASE CAN HEIGHT SHALL BE 22" U.O.N. ON AREA PLANS.

ABBREVIATIONS:

BIDIREC. – BIDIRECTIONAL
OMNI – OMNIDIRECTIONAL
UNIDIREC. – UNIDIRECTIONAL
EXT – EXTENSION
(L) – LED (UNLESS OTHERWISE NOTED)
MFG. – MANUFACTURER
(RR) – REMOVE AND REINSTALL
(E) – EXISTING TO BE REUSED
(N) – NEW
N/A – NOT APPLICABLE

COLORADO LICENSED
DORON LEAN
52246
2/15/19
PROFESSIONAL ENGINEER

CITY & COUNTY of DENVER

DENVER INTERNATIONAL AIRPORT

LEAN ENGINEERING

RUNWAY 17R-35L COMPLEX PAVEMENT REHABILITATION PACKAGE 1

ISSUE RECORD

NO.	BY	PURPOSE	DATE	CKD
1	LE	50% DESIGN	09/14/18	DL
2	LE	90% DESIGN	10/26/18	DL
3	LE	BID	12/26/18	DL
4	LE	ADDENDUM 2	1/17/19	DL
5	LE	CONSTRUCTION	2/15/19	DL

SCALE: AS INDICATED
DATE: FEBRUARY 15, 2019
DRAWN BY: KV
CHECKED BY: JA
FAA AIP NO:
WORK BREAKDOWN NO.
DESIGN CONTRACT NO. 201735882
CONST. CONTRACT NO. 201846271
VOLUME NO.
SHEET TITLE: FIXTURE SCHEDULE CIRCUIT 35LE
SHEET NO. EL852
339 OF 396
CADD FILE NO. _201735882-B1EELD-6334

B:\dropbox (lean photometrics)\active projects\1571801a rwy den 17r-35l reconstruction\01 drawings\working drawings\Sheets_201735882-B1EELD-6334.dwg Feb 12, 2019 - 5:32pm Kat

FIXTURE ID	REF. DWG	FAA DESIGNATION	FIXTURE TYPE	LENS COLOR	BASE CAN	COMMENTS
17RC-08001	EL108	L-850A	BIDIREC.	WHITE/WHITE	L-868B (E)	
17RC-08002	EL108	L-850A	BIDIREC.	WHITE/WHITE	L-868B (E)	
17RC-08003	EL108	L-850A	BIDIREC.	WHITE/WHITE	L-868B (E)	
17RC-08004	EL108	L-850A	BIDIREC.	WHITE/WHITE	L-868B (E)	
17RC-08005	EL108	L-850A	BIDIREC.	WHITE/WHITE	L-868B (E)	
17RC-08006	EL108	L-850A	BIDIREC.	WHITE/WHITE	L-868B (E)	
17RC-08007	EL108	L-850A	BIDIREC.	WHITE/WHITE	L-868B (E)	
17RC-08008	EL108	L-850A	BIDIREC.	WHITE/WHITE	L-868B (E)	
17RC-08009	EL108	L-850A	BIDIREC.	WHITE/WHITE	L-868B (E)	
17RC-08010	EL108	L-850A	BIDIREC.	WHITE/WHITE	L-868B (E)	
17RC-08011	EL108	L-850A	BIDIREC.	WHITE/WHITE	L-868B (N)	
17RC-08012	EL108	L-850A	BIDIREC.	WHITE/WHITE	L-868B (E)	
17RC-08013	EL108	L-850A	BIDIREC.	WHITE/WHITE	L-868B (E)	
17RC-08014	EL108	L-850A	BIDIREC.	WHITE/WHITE	L-868B (E)	
17RC-08015	EL108	L-850A	BIDIREC.	WHITE/WHITE	L-868B (E)	
17RC-08016	EL109	L-850A	BIDIREC.	WHITE/WHITE	L-868B (E)	
17RC-08017	EL109	L-850A	BIDIREC.	WHITE/WHITE	L-868B (E)	
17RC-08018	EL109	L-850A	BIDIREC.	WHITE/WHITE	L-868B (E)	
17RC-08019	EL109	L-850A	BIDIREC.	WHITE/WHITE	L-868B (E)	
17RC-08020	EL109	L-850A	BIDIREC.	WHITE/WHITE	L-868B (N)	
17RC-08021	EL109	L-850A	BIDIREC.	WHITE/WHITE	L-868B (E)	
17RC-08022	EL109	L-850A	BIDIREC.	WHITE/WHITE	L-868B (E)	
17RC-08023	EL109	L-850A	BIDIREC.	WHITE/WHITE	L-868B (N)	
17RC-08024	EL109	L-850A	BIDIREC.	WHITE/WHITE	L-868B (E)	
17RC-08025	EL109	L-850A	BIDIREC.	WHITE/WHITE	L-868B (E)	
17RC-08026	EL109	L-850A	BIDIREC.	WHITE/WHITE	L-868B (E)	
17RC-08027	EL109	L-850A	BIDIREC.	WHITE/WHITE	L-868B (E)	
17RC-08028	EL109	L-850A	BIDIREC.	WHITE/WHITE	L-868B (E)	
17RC-08029	EL109	L-850A	BIDIREC.	WHITE/WHITE	L-868B (E)	
17RC-08030	EL109	L-850A	BIDIREC.	WHITE/WHITE	L-868B (E)	
17RC-08031	EL109	L-850A	BIDIREC.	WHITE/WHITE	L-868B (E)	
17RC-08032	EL109	L-850A	BIDIREC.	WHITE/WHITE	L-868B (E)	
17RC-08033	EL109	L-850A	BIDIREC.	WHITE/WHITE	L-868B (E)	
17RC-08034	EL109	L-850A	BIDIREC.	WHITE/WHITE	L-868B (E)	
17RC-08035	EL110	L-850A	BIDIREC.	WHITE/WHITE	L-868B (E)	
17RC-08036	EL110	L-850A	BIDIREC.	WHITE/WHITE	L-868B (E)	
17RC-08037	EL110	L-850A	BIDIREC.	WHITE/WHITE	L-868B (E)	
17RC-08038	EL110	L-850A	BIDIREC.	WHITE/WHITE	L-868B (E)	
17RC-08039	EL110	L-850A	BIDIREC.	WHITE/WHITE	L-868B (E)	
17RC-08040	EL110	L-850A	BIDIREC.	WHITE/WHITE	L-868B (E)	
17RC-08041	EL110	L-850A	BIDIREC.	WHITE/WHITE	L-868B (E)	
17RC-08042	EL110	L-850A	BIDIREC.	WHITE/WHITE	L-868B (E)	
17RC-08043	EL110	L-850A	BIDIREC.	WHITE/WHITE	L-868B (E)	
17RC-08044	EL110	L-850A	BIDIREC.	WHITE/WHITE	L-868B (E)	
17RC-08045	EL110	L-850A	BIDIREC.	WHITE/WHITE	L-868B (E)	
17RC-08046	EL110	L-850A	BIDIREC.	WHITE/WHITE	L-868B (E)	
17RC-08047	EL110	L-850A	BIDIREC.	WHITE/WHITE	L-868B (E)	
17RC-08048	EL110	L-850A	BIDIREC.	WHITE/WHITE	L-868B (E)	
17RC-08049	EL110	L-850A	BIDIREC.	WHITE/WHITE	L-868B (E)	
17RC-08050	EL110	L-850A	BIDIREC.	WHITE/WHITE	L-868B (E)	
17RC-08051	EL110	L-850A	BIDIREC.	WHITE/WHITE	L-868B (E)	
17RC-08052	EL110	L-850A	BIDIREC.	WHITE/WHITE	L-868B (E)	
17RC-08053	EL110	L-850A	BIDIREC.	WHITE/WHITE	L-868B (E)	
17RC-08054	EL110	L-850A	BIDIREC.	WHITE/WHITE	L-868B (E)	
17RC-08055	EL111	L-850A	BIDIREC.	WHITE/WHITE	L-868B (E)	
17RC-08056	EL111	L-850A	BIDIREC.	WHITE/WHITE	L-868B (E)	
17RC-08057	EL111	L-850A	BIDIREC.	WHITE/WHITE	L-868B (E)	
17RC-08058	EL111	L-850A	BIDIREC.	WHITE/WHITE	L-868B (E)	
17RC-08059	EL111	L-850A	BIDIREC.	WHITE/WHITE	L-868B (E)	
17RC-08060	EL111	L-850A	BIDIREC.	WHITE/WHITE	L-868B (E)	
17RC-08061	EL111	L-850A	BIDIREC.	WHITE/RED	L-868B (E)	
17RC-08062	EL111	L-850A	BIDIREC.	WHITE/WHITE	L-868B (E)	
17RC-08063	EL111	L-850A	BIDIREC.	WHITE/RED	L-868B (E)	
17RC-08064	EL111	L-850A	BIDIREC.	WHITE/WHITE	L-868B (E)	

MATCH LINE SEE SHEET RIGHT

FIXTURE ID	REF. DWG	FAA DESIGNATION	FIXTURE TYPE	LENS COLOR	BASE CAN	COMMENTS

MATCH LINE SEE SHEET LEFT

17RC-08065	EL111	L-850A	BIDIREC.	WHITE/RED	L-868B (E)	
17RC-08066	EL111	L-850A	BIDIREC.	WHITE/WHITE	L-868B (E)	
17RC-08067	EL111	L-850A	BIDIREC.	WHITE/RED	L-868B (E)	
17RC-08068	EL111	L-850A	BIDIREC.	WHITE/WHITE	L-868B (E)	
17RC-08069	EL111	L-850A	BIDIREC.	WHITE/RED	L-868B (E)	
17RC-08070	EL111	L-850A	BIDIREC.	WHITE/WHITE	L-868B (E)	
17RC-08071	EL111	L-850A	BIDIREC.	WHITE/RED	L-868B (E)	
17RC-08072	EL111	L-850A	BIDIREC.	WHITE/WHITE	L-868B (E)	
17RC-08073	EL111	L-850A	BIDIREC.	WHITE/RED	L-868B (E)	
17RC-08074	EL112	L-850A	BIDIREC.	WHITE/WHITE	L-868B (E)	
17RC-08075	EL112	L-850A	BIDIREC.	WHITE/RED	L-868B (E)	
17RC-08076	EL112	L-850A	BIDIREC.	WHITE/WHITE	L-868B (E)	
17RC-08077	EL112	L-850A	BIDIREC.	WHITE/RED	L-868B (E)	
17RC-08078	EL112	L-850A	BIDIREC.	WHITE/WHITE	L-868B (E)	
17RC-08079	EL112	L-850A	BIDIREC.	WHITE/RED	L-868B (E)	
17RC-08080	EL112	L-850A	BIDIREC.	WHITE/WHITE	L-868B (E)	
17RC-08081	EL112	L-850A	BIDIREC.	WHITE/RED	L-868B (E)	
17RC-08082	EL112	L-850A	BIDIREC.	WHITE/WHITE	L-868B (E)	
17RC-08083	EL112	L-850A	BIDIREC.	WHITE/RED	L-868B (E)	
17RC-08084	EL112	L-850A	BIDIREC.	WHITE/WHITE	L-868B (E)	
17RC-08085	EL112	L-850A	BIDIREC.	WHITE/RED	L-868B (E)	
17RC-08086	EL112	L-850A	BIDIREC.	WHITE/WHITE	L-868B (E)	
17RC-08087	EL112	L-850A	BIDIREC.	WHITE/RED	L-868B (E)	
17RC-08088	EL112	L-850A	BIDIREC.	WHITE/WHITE	L-868B (E)	
17RC-08089	EL112	L-850A	BIDIREC.	WHITE/RED	L-868B (E)	
17RC-08090	EL112	L-850A	BIDIREC.	WHITE/WHITE	L-868B (E)	
17RC-08091	EL112	L-850A	BIDIREC.	WHITE/RED	L-868B (E)	
17RC-08092	EL112	L-850A	BIDIREC.	WHITE/WHITE	L-868B (E)	
17RC-08093	EL112	L-850A	BIDIREC.	WHITE/RED	L-868B (E)	
17RC-08094	EL113	L-850A	BIDIREC.	WHITE/WHITE	L-868B (E)	
17RC-08095	EL113	L-850A	BIDIREC.	WHITE/RED	L-868B (E)	
17RC-08096	EL113	L-850A	BIDIREC.	WHITE/WHITE	L-868B (E)	
17RC-08097	EL113	L-850A	BIDIREC.	WHITE/RED	L-868B (E)	
17RC-08098	EL113	L-850A	BIDIREC.	WHITE/WHITE	L-868B (E)	
17RC-08099	EL113	L-850A	BIDIREC.	WHITE/RED	L-868B (E)	
17RC-08100	EL113	L-850A	BIDIREC.	WHITE/WHITE	L-868B (E)	
17RC-08101	EL113	L-850A	BIDIREC.	WHITE/RED	L-868B (E)	
17RC-08102	EL113	L-850A	BIDIREC.	WHITE/RED	L-868B (E)	
17RC-08103	EL113	L-850A	BIDIREC.	WHITE/RED	L-868B (E)	
17RC-08104	EL113	L-850A	BIDIREC.	WHITE/RED	L-868B (N)	
17RC-08105	EL113	L-850A	BIDIREC.	WHITE/RED	L-868B (N)	
17RC-08106	EL113	L-850A	BIDIREC.	WHITE/RED	L-868B (N)	
17RC-08107	EL113	L-850A	BIDIREC.	WHITE/RED	L-868B (N)	
17RC-08108	EL113	L-850A	BIDIREC.	WHITE/RED	L-868B (N)	
17RC-08109	EL113	L-850A	BIDIREC.	WHITE/RED	L-868B (N)	
17RC-08110	EL113	L-850A	BIDIREC.	WHITE/RED	L-868B (N)	
17RC-08111	EL113	L-850A	BIDIREC.	WHITE/RED	L-868B (N)	
17RC-08112	EL113	L-850A	BIDIREC.	WHITE/RED	L-868B (N)	
17RC-08113	EL113	L-850A	BIDIREC.	WHITE/RED	L-868B (N)	
17RC-08114	EL114	L-850A	BIDIREC.	WHITE/RED	L-868B (N)	
17RC-08115	EL114	L-850A	BIDIREC.	WHITE/RED	L-868B (N)	
17RC-08116	EL114	L-850A	BIDIREC.	WHITE/RED	L-868B (N)	
17RC-08117	EL114	L-850A	BIDIREC.	WHITE/RED	L-868B (N)	
17RC-08118	EL114	L-850A	BIDIREC.	WHITE/RED	L-868B (N)	
17RC-08119	EL114	L-850A	BIDIREC.	WHITE/RED	L-868B (N)	
17RC-08120	EL114	L-850A	BIDIREC.	WHITE/RED	L-868B (N)	

NOTES:

1. SEE SHEETS E-001 FOR GENERAL ELECTRICAL NOTES.

SHEET NOTES:

1. FOR (N) BASE CANS ON TWY M6 REFER TO EL900 SERIES. FOR ALL OTHER (N) BASE CANS CONTRACTOR MUST SURVEY (E) BASE CAN LOCATION AND INSTALL (N) BASE CAN AT SAME LOCATION AND ORIENTATION AND ALIGNMENT.
2. ALL LIGHTS MUST BE NEW AND LED U.O.N.
3. FOR ALL LIGHT FIXTURES (NEW AND REINSTALLED), FURNISH AND INSTALL CONNECTORS, SPACER RINGS, FLANGE RING, WITH PAVEMENT DAM, BOLTS, AND WASHERS.
4. FOR NEW LIGHTS, FURNISH AND INSTALL NEW TRANSFORMER SIZE PER MFG. RECOMMENDATIONS. SUPPLY WITH 6.6A PRIMARY/ 6.6A SECONDARY.
5. FOR EXISTING LIGHTS TO BE REMOVED AND REINSTALLED REFER TO SCHEDULE BELOW:

LIGHT TYPE	XFMR TYPE
TWY CTL UNIDIRECTIONAL (LED)	30/45

6. RECORD NUMBER AND DEPTH OF SPACERS.
7. L-868B BASE CAN HEIGHT SHALL BE 22" U.O.N. ON AREA PLANS.
8. L-867B BASE CAN HEIGHT SHALL BE 22" U.O.N. ON AREA PLANS.

ABBREVIATIONS:

BIDIREC. – BIDIRECTIONAL
OMNI – OMNIDIRECTIONAL
UNIDIREC. – UNIDIRECTIONAL
EXT – EXTENSION
(L) – LED (UNLESS OTHERWISE NOTED)
MFG. – MANUFACTURER
(RR) – REMOVE AND REINSTALL
(E) – EXISTING TO BE REUSED
(N) – NEW
N/A – NOT APPLICABLE

COLORADO LICENSED
CORON LEA
52246
2/15/19
PROFESSIONAL ENGINEER

CITY & COUNTY of DENVER

DENVER INTERNATIONAL AIRPORT

LEAN ENGINEERING

RUNWAY 17R-35L COMPLEX PAVEMENT REHABILITATION PACKAGE 1

ISSUE RECORD

NO.	BY	PURPOSE	DATE	CKD
1	LE	50% DESIGN	09/14/18	DL
2	LE	90% DESIGN	10/26/18	DL
3	LE	BID	12/26/18	DL
4	LE	CONSTRUCTION	2/15/19	DL

SCALE: AS INDICATED
DATE: FEBRUARY 15, 2019
DRAWN BY: KV
CHECKED BY: JA
FAA AIP NO:
WORK BREAKDOWN NO.
DESIGN CONTRACT NO. 201735882
CONST. CONTRACT NO. 201846271
VOLUME NO.
SHEET TITLE: FIXTURE SCHEDULE CIRCUIT 17RC
SHEET NO. EL853
340 OF 396
CADD FILE NO. _201735882-B1EELD-6334

D:\dropbox (lean photometrics)\active projects\1571801a rah den 17r-35l reconstruction\01 drawings\working drawings\sheets_20173582-B1EELD-6334.dwg Feb 12, 2019 - 5:32pm Kat

FIXTURE ID	REF. DWG	FAA DESIGNATION	FIXTURE TYPE	LENS COLOR	BASE CAN	COMMENTS
35LC-08001	EL102	L-850A	BIDIREC.	WHITE/RED	L-868B (N)	
35LC-08002	EL102	L-850A	BIDIREC.	WHITE/RED	L-868B (N)	
35LC-08003	EL102	L-850A	BIDIREC.	WHITE/RED	L-868B (N)	
35LC-08004	EL102	L-850A	BIDIREC.	WHITE/RED	L-868B (N)	
35LC-08005	EL102	L-850A	BIDIREC.	WHITE/RED	L-868B (N)	
35LC-08006	EL102	L-850A	BIDIREC.	WHITE/RED	L-868B (N)	
35LC-08007	EL102	L-850A	BIDIREC.	WHITE/RED	L-868B (N)	
35LC-08008	EL102	L-850A	BIDIREC.	WHITE/RED	L-868B (N)	
35LC-08009	EL102	L-850A	BIDIREC.	WHITE/RED	L-868B (N)	
35LC-08010	EL102	L-850A	BIDIREC.	WHITE/RED	L-868B (N)	
35LC-08011	EL102	L-850A	BIDIREC.	WHITE/RED	L-868B (N)	
35LC-08012	EL102	L-850A	BIDIREC.	WHITE/RED	L-868B (N)	
35LC-08013	EL102	L-850A	BIDIREC.	WHITE/RED	L-868B (N)	
35LC-08014	EL102	L-850A	BIDIREC.	WHITE/RED	L-868B (N)	
35LC-08015	EL102	L-850A	BIDIREC.	WHITE/RED	L-868B (N)	
35LC-08016	EL103	L-850A	BIDIREC.	WHITE/RED	L-868B (N)	
35LC-08017	EL103	L-850A	BIDIREC.	WHITE/RED	L-868B (N)	
35LC-08018	EL103	L-850A	BIDIREC.	WHITE/RED	L-868B (N)	
35LC-08019	EL103	L-850A	BIDIREC.	WHITE/RED	L-868B (N)	
35LC-08020	EL103	L-850A	BIDIREC.	WHITE/RED	L-868B (N)	
35LC-08021	EL103	L-850A	BIDIREC.	WHITE/WHITE	L-868B (N)	
35LC-08022	EL103	L-850A	BIDIREC.	WHITE/RED	L-868B (N)	
35LC-08023	EL103	L-850A	BIDIREC.	WHITE/WHITE	L-868B (N)	
35LC-08024	EL103	L-850A	BIDIREC.	WHITE/RED	L-868B (N)	
35LC-08025	EL103	L-850A	BIDIREC.	WHITE/WHITE	L-868B (E)	
35LC-08026	EL103	L-850A	BIDIREC.	WHITE/RED	L-868B (E)	
35LC-08027	EL103	L-850A	BIDIREC.	WHITE/WHITE	L-868B (E)	
35LC-08028	EL103	L-850A	BIDIREC.	WHITE/RED	L-868B (E)	
35LC-08029	EL103	L-850A	BIDIREC.	WHITE/WHITE	L-868B (E)	
35LC-08030	EL103	L-850A	BIDIREC.	WHITE/RED	L-868B (E)	
35LC-08031	EL103	L-850A	BIDIREC.	WHITE/WHITE	L-868B (E)	
35LC-08032	EL103	L-850A	BIDIREC.	WHITE/RED	L-868B (E)	
35LC-08033	EL103	L-850A	BIDIREC.	WHITE/WHITE	L-868B (E)	
35LC-08034	EL103	L-850A	BIDIREC.	WHITE/RED	L-868B (E)	
35LC-08035	EL103	L-850A	BIDIREC.	WHITE/WHITE	L-868B (E)	
35LC-08036	EL104	L-850A	BIDIREC.	WHITE/RED	L-868B (E)	
35LC-08037	EL104	L-850A	BIDIREC.	WHITE/WHITE	L-868B (E)	
35LC-08038	EL104	L-850A	BIDIREC.	WHITE/RED	L-868B (E)	
35LC-08039	EL104	L-850A	BIDIREC.	WHITE/WHITE	L-868B (E)	
35LC-08040	EL104	L-850A	BIDIREC.	WHITE/RED	L-868B (E)	
35LC-08041	EL104	L-850A	BIDIREC.	WHITE/WHITE	L-868B (E)	
35LC-08042	EL104	L-850A	BIDIREC.	WHITE/RED	L-868B (E)	
35LC-08043	EL104	L-850A	BIDIREC.	WHITE/WHITE	L-868B (E)	
35LC-08044	EL104	L-850A	BIDIREC.	WHITE/RED	L-868B (E)	
35LC-08045	EL104	L-850A	BIDIREC.	WHITE/WHITE	L-868B (E)	
35LC-08046	EL104	L-850A	BIDIREC.	WHITE/RED	L-868B (E)	
35LC-08047	EL104	L-850A	BIDIREC.	WHITE/WHITE	L-868B (E)	
35LC-08048	EL104	L-850A	BIDIREC.	WHITE/RED	L-868B (E)	
35LC-08049	EL104	L-850A	BIDIREC.	WHITE/WHITE	L-868B (E)	
35LC-08050	EL104	L-850A	BIDIREC.	WHITE/RED	L-868B (E)	
35LC-08051	EL104	L-850A	BIDIREC.	WHITE/WHITE	L-868B (E)	
35LC-08052	EL104	L-850A	BIDIREC.	WHITE/RED	L-868B (E)	
35LC-08053	EL104	L-850A	BIDIREC.	WHITE/WHITE	L-868B (E)	
35LC-08054	EL104	L-850A	BIDIREC.	WHITE/RED	L-868B (E)	
35LC-08055	EL105	L-850A	BIDIREC.	WHITE/WHITE	L-868B (E)	
35LC-08056	EL105	L-850A	BIDIREC.	WHITE/RED	L-868B (E)	
35LC-08057	EL105	L-850A	BIDIREC.	WHITE/WHITE	L-868B (E)	
35LC-08058	EL105	L-850A	BIDIREC.	WHITE/RED	L-868B (E)	
35LC-08059	EL105	L-850A	BIDIREC.	WHITE/WHITE	L-868B (E)	
35LC-08060	EL105	L-850A	BIDIREC.	WHITE/RED	L-868B (E)	
35LC-08061	EL105	L-850A	BIDIREC.	WHITE/WHITE	L-868B (E)	
35LC-08062	EL105	L-850A	BIDIREC.	WHITE/WHITE	L-868B (E)	
35LC-08063	EL105	L-850A	BIDIREC.	WHITE/WHITE	L-868B (E)	
35LC-08064	EL105	L-850A	BIDIREC.	WHITE/WHITE	L-868B (E)	

MATCH LINE SEE SHEET RIGHT

FIXTURE ID	REF. DWG	FAA DESIGNATION	FIXTURE TYPE	LENS COLOR	BASE CAN	COMMENTS

MATCH LINE SEE SHEET LEFT

35LC-08065	EL105	L-850A	BIDIREC.	WHITE/WHITE	L-868B (E)	
35LC-08066	EL105	L-850A	BIDIREC.	WHITE/WHITE	L-868B (E)	
35LC-08067	EL105	L-850A	BIDIREC.	WHITE/WHITE	L-868B (E)	
35LC-08068	EL105	L-850A	BIDIREC.	WHITE/WHITE	L-868B (E)	
35LC-08069	EL105	L-850A	BIDIREC.	WHITE/WHITE	L-868B (E)	
35LC-08070	EL105	L-850A	BIDIREC.	WHITE/WHITE	L-868B (E)	
35LC-08071	EL105	L-850A	BIDIREC.	WHITE/WHITE	L-868B (E)	
35LC-08072	EL105	L-850A	BIDIREC.	WHITE/WHITE	L-868B (E)	
35LC-08073	EL105	L-850A	BIDIREC.	WHITE/WHITE	L-868B (E)	
35LC-08074	EL105	L-850A	BIDIREC.	WHITE/WHITE	L-868B (E)	
35LC-08075	EL106	L-850A	BIDIREC.	WHITE/WHITE	L-868B (E)	
35LC-08076	EL106	L-850A	BIDIREC.	WHITE/WHITE	L-868B (E)	
35LC-08077	EL106	L-850A	BIDIREC.	WHITE/WHITE	L-868B (E)	
35LC-08078	EL106	L-850A	BIDIREC.	WHITE/WHITE	L-868B (E)	
35LC-08079	EL106	L-850A	BIDIREC.	WHITE/WHITE	L-868B (E)	
35LC-08080	EL106	L-850A	BIDIREC.	WHITE/WHITE	L-868B (E)	
35LC-08081	EL106	L-850A	BIDIREC.	WHITE/WHITE	L-868B (E)	
35LC-08082	EL106	L-850A	BIDIREC.	WHITE/WHITE	L-868B (E)	
35LC-08083	EL106	L-850A	BIDIREC.	WHITE/WHITE	L-868B (E)	
35LC-08084	EL106	L-850A	BIDIREC.	WHITE/WHITE	L-868B (E)	
35LC-08085	EL106	L-850A	BIDIREC.	WHITE/WHITE	L-868B (E)	
35LC-08086	EL106	L-850A	BIDIREC.	WHITE/WHITE	L-868B (E)	
35LC-08087	EL106	L-850A	BIDIREC.	WHITE/WHITE	L-868B (E)	
35LC-08088	EL106	L-850A	BIDIREC.	WHITE/WHITE	L-868B (E)	
35LC-08089	EL106	L-850A	BIDIREC.	WHITE/WHITE	L-868B (E)	
35LC-08090	EL106	L-850A	BIDIREC.	WHITE/WHITE	L-868B (E)	
35LC-08091	EL106	L-850A	BIDIREC.	WHITE/WHITE	L-868B (E)	
35LC-08092	EL106	L-850A	BIDIREC.	WHITE/WHITE	L-868B (N)	
35LC-08093	EL106	L-850A	BIDIREC.	WHITE/WHITE	L-868B (E)	
35LC-08094	EL107	L-850A	BIDIREC.	WHITE/WHITE	L-868B (N)	
35LC-08095	EL107	L-850A	BIDIREC.	WHITE/WHITE	L-868B (E)	
35LC-08096	EL107	L-850A	BIDIREC.	WHITE/WHITE	L-868B (N)	
35LC-08097	EL107	L-850A	BIDIREC.	WHITE/WHITE	L-868B (E)	
35LC-08098	EL107	L-850A	BIDIREC.	WHITE/WHITE	L-868B (E)	
35LC-08099	EL107	L-850A	BIDIREC.	WHITE/WHITE	L-868B (E)	
35LC-08100	EL107	L-850A	BIDIREC.	WHITE/WHITE	L-868B (N)	
35LC-08101	EL107	L-850A	BIDIREC.	WHITE/WHITE	L-868B (E)	
35LC-08102	EL107	L-850A	BIDIREC.	WHITE/WHITE	L-868B (E)	
35LC-08103	EL107	L-850A	BIDIREC.	WHITE/WHITE	L-868B (E)	
35LC-08104	EL107	L-850A	BIDIREC.	WHITE/WHITE	L-868B (E)	
35LC-08105	EL107	L-850A	BIDIREC.	WHITE/WHITE	L-868B (E)	
35LC-08106	EL107	L-850A	BIDIREC.	WHITE/WHITE	L-868B (E)	
35LC-08107	EL107	L-850A	BIDIREC.	WHITE/WHITE	L-868B (E)	
35LC-08108	EL107	L-850A	BIDIREC.	WHITE/WHITE	L-868B (E)	
35LC-08109	EL107	L-850A	BIDIREC.	WHITE/WHITE	L-868B (E)	
35LC-08110	EL107	L-850A	BIDIREC.	WHITE/WHITE	L-868B (E)	
35LC-08111	EL107	L-850A	BIDIREC.	WHITE/WHITE	L-868B (E)	
35LC-08112	EL107	L-850A	BIDIREC.	WHITE/WHITE	L-868B (E)	
35LC-08113	EL107	L-850A	BIDIREC.	WHITE/WHITE	L-868B (E)	
35LC-08114	EL108	L-850A	BIDIREC.	WHITE/WHITE	L-868B (E)	
35LC-08115	EL108	L-850A	BIDIREC.	WHITE/WHITE	L-868B (N)	
35LC-08116	EL108	L-850A	BIDIREC.	WHITE/WHITE	L-868B (E)	
35LC-08117	EL108	L-850A	BIDIREC.	WHITE/WHITE	L-868B (E)	
35LC-08118	EL108	L-850A	BIDIREC.	WHITE/WHITE	L-868B (E)	

NOTES:

1. SEE SHEETS E-001 FOR GENERAL ELECTRICAL NOTES.

SHEET NOTES:

1. FOR (N) BASE CANS ON TWY M6 REFER TO EL900 SERIES. FOR ALL OTHER (N) BASE CANS CONTRACTOR MUST SURVEY (E) BASE CAN LOCATION AND INSTALL (N) BASE CAN AT SAME LOCATION AND ORIENTATION AND ALIGNMENT.
2. ALL LIGHTS MUST BE NEW AND LED U.O.N.
3. FOR ALL LIGHT FIXTURES (NEW AND REINSTALLED), FURNISH AND INSTALL CONNECTORS, SPACER RINGS, FLANGE RING, WITH PAVEMENT DAM, BOLTS, AND WASHERS.
4. FOR NEW LIGHTS, FURNISH AND INSTALL NEW TRANSFORMER SIZE PER MFG. RECOMMENDATIONS. SUPPLY WITH 6.6A PRIMARY/ 6.6A SECONDARY.
5. FOR EXISTING LIGHTS TO BE REMOVED AND REINSTALLED REFER TO SCHEDULE BELOW:

LIGHT TYPE	XFMR TYPE
TWY CTL UNIDIRECTIONAL (LED)	30/45

6. RECORD NUMBER AND DEPTH OF SPACERS.
7. L-868B BASE CAN HEIGHT SHALL BE 22" U.O.N. ON AREA PLANS.
8. L-867B BASE CAN HEIGHT SHALL BE 22" U.O.N. ON AREA PLANS.

ABBREVIATIONS:

BIDIREC. – BIDIRECTIONAL
OMNI – OMNIDIRECTIONAL
UNIDIREC. – UNIDIRECTIONAL
EXT – EXTENSION
(L) – LED (UNLESS OTHERWISE NOTED)
MFG. – MANUFACTURER
(RR) – REMOVE AND REINSTALL
(E) – EXISTING TO BE REUSED
(N) – NEW
N/A – NOT APPLICABLE

COLORADO LICENSED
BARON LEAN
52246
2/15/19
PROFESSIONAL ENGINEER

CITY & COUNTY of DENVER

DENVER INTERNATIONAL AIRPORT

LEAN ENGINEERING

RUNWAY 17R-35L COMPLEX PAVEMENT REHABILITATION PACKAGE 1

ISSUE RECORD

NO.	BY	PURPOSE	DATE	CKD
1	LE	50% DESIGN	09/14/18	DL
2	LE	90% DESIGN	10/26/18	DL
3	LE	BID	12/26/18	DL
4	LE	CONSTRUCTION	2/15/19	DL

SCALE: AS INDICATED
DATE: FEBRUARY 15, 2019
DRAWN BY: KV
CHECKED BY: JA
FAA AIP NO:
WORK BREAKDOWN NO.
DESIGN CONTRACT NO. 201735882
CONST. CONTRACT NO. 201846271
VOLUME NO.
SHEET TITLE: FIXTURE SCHEDULE CIRCUIT 35LC
SHEET NO. EL854

CADD FILE NO. _201735882-B1EELD-6334

D:\dropbox (lean photometrics)\active projects\1571801a rah den 17r-35l reconstruction\01 drawings\working drawings\sheets_201735882-B1EELD-6334.dwg Feb 12, 2019 - 5:32pm Kat

FIXTURE ID	REF. DWG	FAA DESIGNATION	FIXTURE TYPE	LENS COLOR	BASE CAN	COMMENTS
17RTD-08001	EL111	L-850B	UNIDIREC.	WHITE	L-868B (E)	
17RTD-08002	EL111	L-850B	UNIDIREC.	WHITE	L-868B (E)	
17RTD-08003	EL111	L-850B	UNIDIREC.	WHITE	L-868B (N)	
17RTD-08004	EL111	L-850B	UNIDIREC.	WHITE	L-868B (E)	
17RTD-08005	EL111	L-850B	UNIDIREC.	WHITE	L-868B (E)	
17RTD-08006	EL111	L-850B	UNIDIREC.	WHITE	L-868B (N)	
17RTD-08007	EL111	L-850B	UNIDIREC.	WHITE	L-868B (E)	
17RTD-08008	EL111	L-850B	UNIDIREC.	WHITE	L-868B (E)	
17RTD-08009	EL111	L-850B	UNIDIREC.	WHITE	L-868B (N)	
17RTD-08010	EL111	L-850B	UNIDIREC.	WHITE	L-868B (E)	
17RTD-08011	EL111	L-850B	UNIDIREC.	WHITE	L-868B (E)	
17RTD-08012	EL111	L-850B	UNIDIREC.	WHITE	L-868B (N)	
17RTD-08013	EL111	L-850B	UNIDIREC.	WHITE	L-868B (E)	
17RTD-08014	EL111	L-850B	UNIDIREC.	WHITE	L-868B (E)	
17RTD-08015	EL111	L-850B	UNIDIREC.	WHITE	L-868B (N)	
17RTD-08016	EL111	L-850B	UNIDIREC.	WHITE	L-868B (E)	
17RTD-08017	EL111	L-850B	UNIDIREC.	WHITE	L-868B (E)	
17RTD-08018	EL111	L-850B	UNIDIREC.	WHITE	L-868B (N)	
17RTD-08091	EL111	L-850B	UNIDIREC.	WHITE	L-868B (E)	
17RTD-08092	EL111	L-850B	UNIDIREC.	WHITE	L-868B (E)	
17RTD-08093	EL111	L-850B	UNIDIREC.	WHITE	L-868B (E)	
17RTD-08094	EL111	L-850B	UNIDIREC.	WHITE	L-868B (E)	
17RTD-08095	EL111	L-850B	UNIDIREC.	WHITE	L-868B (E)	
17RTD-08096	EL111	L-850B	UNIDIREC.	WHITE	L-868B (E)	
17RTD-08097	EL111	L-850B	UNIDIREC.	WHITE	L-868B (E)	
17RTD-08098	EL111	L-850B	UNIDIREC.	WHITE	L-868B (N)	
17RTD-08099	EL111	L-850B	UNIDIREC.	WHITE	L-868B (N)	
17RTD-08100	EL111	L-850B	UNIDIREC.	WHITE	L-868B (E)	
17RTD-08101	EL111	L-850B	UNIDIREC.	WHITE	L-868B (E)	
17RTD-08102	EL111	L-850B	UNIDIREC.	WHITE	L-868B (E)	
17RTD-08103	EL111	L-850B	UNIDIREC.	WHITE	L-868B (E)	
17RTD-08104	EL111	L-850B	UNIDIREC.	WHITE	L-868B (E)	
17RTD-08105	EL111	L-850B	UNIDIREC.	WHITE	L-868B (E)	
17RTD-08106	EL111	L-850B	UNIDIREC.	WHITE	L-868B (E)	
17RTD-08107	EL111	L-850B	UNIDIREC.	WHITE	L-868B (E)	
17RTD-08108	EL111	L-850B	UNIDIREC.	WHITE	L-868B (E)	
17RTD-08019	EL112	L-850B	UNIDIREC.	WHITE	L-868B (E)	
17RTD-08020	EL112	L-850B	UNIDIREC.	WHITE	L-868B (E)	
17RTD-08021	EL112	L-850B	UNIDIREC.	WHITE	L-868B (N)	
17RTD-08022	EL112	L-850B	UNIDIREC.	WHITE	L-868B (E)	
17RTD-08023	EL112	L-850B	UNIDIREC.	WHITE	L-868B (E)	
17RTD-08024	EL112	L-850B	UNIDIREC.	WHITE	L-868B (N)	
17RTD-08025	EL112	L-850B	UNIDIREC.	WHITE	L-868B (E)	
17RTD-08026	EL112	L-850B	UNIDIREC.	WHITE	L-868B (E)	
17RTD-08027	EL112	L-850B	UNIDIREC.	WHITE	L-868B (N)	
17RTD-08028	EL112	L-850B	UNIDIREC.	WHITE	L-868B (E)	
17RTD-08029	EL112	L-850B	UNIDIREC.	WHITE	L-868B (E)	
17RTD-08030	EL112	L-850B	UNIDIREC.	WHITE	L-868B (N)	
17RTD-08031	EL112	L-850B	UNIDIREC.	WHITE	L-868B (E)	
17RTD-08032	EL112	L-850B	UNIDIREC.	WHITE	L-868B (E)	
17RTD-08033	EL112	L-850B	UNIDIREC.	WHITE	L-868B (N)	
17RTD-08034	EL112	L-850B	UNIDIREC.	WHITE	L-868B (E)	
17RTD-08035	EL112	L-850B	UNIDIREC.	WHITE	L-868B (E)	
17RTD-08036	EL112	L-850B	UNIDIREC.	WHITE	L-868B (N)	
17RTD-08037	EL112	L-850B	UNIDIREC.	WHITE	L-868B (E)	
17RTD-08038	EL112	L-850B	UNIDIREC.	WHITE	L-868B (E)	
17RTD-08039	EL112	L-850B	UNIDIREC.	WHITE	L-868B (N)	
17RTD-08040	EL112	L-850B	UNIDIREC.	WHITE	L-868B (E)	
17RTD-08041	EL112	L-850B	UNIDIREC.	WHITE	L-868B (E)	
17RTD-08042	EL112	L-850B	UNIDIREC.	WHITE	L-868B (N)	
17RTD-08043	EL112	L-850B	UNIDIREC.	WHITE	L-868B (E)	
17RTD-08044	EL112	L-850B	UNIDIREC.	WHITE	L-868B (E)	
17RTD-08045	EL112	L-850B	UNIDIREC.	WHITE	L-868B (N)	
17RTD-08046	EL112	L-850B	UNIDIREC.	WHITE	L-868B (E)	
17RTD-08047	EL112	L-850B	UNIDIREC.	WHITE	L-868B (E)	
17RTD-08048	EL112	L-850B	UNIDIREC.	WHITE	L-868B (N)	
17RTD-08109	EL112	L-850B	UNIDIREC.	WHITE	L-868B (E)	
17RTD-08110	EL112	L-850B	UNIDIREC.	WHITE	L-868B (N)	
17RTD-08111	EL112	L-850B	UNIDIREC.	WHITE	L-868B (N)	
17RTD-08112	EL112	L-850B	UNIDIREC.	WHITE	L-868B (E)	
17RTD-08113	EL112	L-850B	UNIDIREC.	WHITE	L-868B (E)	
17RTD-08114	EL112	L-850B	UNIDIREC.	WHITE	L-868B (E)	
17RTD-08115	EL112	L-850B	UNIDIREC.	WHITE	L-868B (E)	
17RTD-08116	EL112	L-850B	UNIDIREC.	WHITE	L-868B (E)	
17RTD-08117	EL112	L-850B	UNIDIREC.	WHITE	L-868B (E)	
17RTD-08118	EL112	L-850B	UNIDIREC.	WHITE	L-868B (E)	
17RTD-08119	EL112	L-850B	UNIDIREC.	WHITE	L-868B (E)	
17RTD-08120	EL112	L-850B	UNIDIREC.	WHITE	L-868B (E)	

MATCH LINE SEE SHEET RIGHT

FIXTURE ID	REF. DWG	FAA DESIGNATION	FIXTURE TYPE	LENS COLOR	BASE CAN	COMMENTS

MATCH LINE SEE SHEET LEFT

17RTD-08121	EL112	L-850B	UNIDIREC.	WHITE	L-868B (E)	
17RTD-08122	EL112	L-850B	UNIDIREC.	WHITE	L-868B (N)	
17RTD-08123	EL112	L-850B	UNIDIREC.	WHITE	L-868B (N)	
17RTD-08124	EL112	L-850B	UNIDIREC.	WHITE	L-868B (N)	
17RTD-08125	EL112	L-850B	UNIDIREC.	WHITE	L-868B (E)	
17RTD-08126	EL112	L-850B	UNIDIREC.	WHITE	L-868B (E)	
17RTD-08127	EL112	L-850B	UNIDIREC.	WHITE	L-868B (E)	
17RTD-08128	EL112	L-850B	UNIDIREC.	WHITE	L-868B (E)	
17RTD-08129	EL112	L-850B	UNIDIREC.	WHITE	L-868B (E)	
17RTD-08130	EL112	L-850B	UNIDIREC.	WHITE	L-868B (E)	
17RTD-08131	EL112	L-850B	UNIDIREC.	WHITE	L-868B (E)	
17RTD-08132	EL112	L-850B	UNIDIREC.	WHITE	L-868B (E)	
17RTD-08133	EL112	L-850B	UNIDIREC.	WHITE	L-868B (E)	
17RTD-08134	EL112	L-850B	UNIDIREC.	WHITE	L-868B (E)	
17RTD-08135	EL112	L-850B	UNIDIREC.	WHITE	L-868B (E)	
17RTD-08136	EL112	L-850B	UNIDIREC.	WHITE	L-868B (E)	
17RTD-08137	EL112	L-850B	UNIDIREC.	WHITE	L-868B (E)	
17RTD-08138	EL112	L-850B	UNIDIREC.	WHITE	L-868B (E)	
17RTD-08049	EL113	L-850B	UNIDIREC.	WHITE	L-868B (N)	
17RTD-08050	EL113	L-850B	UNIDIREC.	WHITE	L-868B (N)	
17RTD-08151	EL113	L-850B	UNIDIREC.	WHITE	L-868B (N)	
17RTD-08152	EL113	L-850B	UNIDIREC.	WHITE	L-868B (E)	
17RTD-08153	EL113	L-850B	UNIDIREC.	WHITE	L-868B (E)	
17RTD-08154	EL113	L-850B	UNIDIREC.	WHITE	L-868B (N)	
17RTD-08155	EL113	L-850B	UNIDIREC.	WHITE	L-868B (E)	
17RTD-08156	EL113	L-850B	UNIDIREC.	WHITE	L-868B (E)	
17RTD-08157	EL113	L-850B	UNIDIREC.	WHITE	L-868B (E)	
17RTD-08158	EL113	L-850B	UNIDIREC.	WHITE	L-868B (E)	
17RTD-08159	EL113	L-850B	UNIDIREC.	WHITE	L-868B (E)	
17RTD-08160	EL113	L-850B	UNIDIREC.	WHITE	L-868B (E)	
17RTD-08161	EL113	L-850B	UNIDIREC.	WHITE	L-868B (E)	
17RTD-08162	EL113	L-850B	UNIDIREC.	WHITE	L-868B (E)	
17RTD-08163	EL113	L-850B	UNIDIREC.	WHITE	L-868B (N)	
17RTD-08164	EL113	L-850B	UNIDIREC.	WHITE	L-868B (E)	
17RTD-08165	EL113	L-850B	UNIDIREC.	WHITE	L-868B (E)	
17RTD-08166	EL113	L-850B	UNIDIREC.	WHITE	L-868B (N)	
17RTD-08167	EL113	L-850B	UNIDIREC.	WHITE	L-868B (E)	
17RTD-08168	EL113	L-850B	UNIDIREC.	WHITE	L-868B (E)	
17RTD-08169	EL113	L-850B	UNIDIREC.	WHITE	L-868B (N)	
17RTD-08170	EL113	L-850B	UNIDIREC.	WHITE	L-868B (E)	
17RTD-08171	EL113	L-850B	UNIDIREC.	WHITE	L-868B (E)	
17RTD-08172	EL113	L-850B	UNIDIREC.	WHITE	L-868B (E)	
17RTD-08173	EL113	L-850B	UNIDIREC.	WHITE	L-868B (E)	
17RTD-08174	EL113	L-850B	UNIDIREC.	WHITE	L-868B (E)	
17RTD-08175	EL113	L-850B	UNIDIREC.	WHITE	L-868B (E)	
17RTD-08176	EL113	L-850B	UNIDIREC.	WHITE	L-868B (E)	
17RTD-08177	EL113	L-850B	UNIDIREC.	WHITE	L-868B (E)	
17RTD-08178	EL113	L-850B	UNIDIREC.	WHITE	L-868B (E)	
17RTD-08139	EL113	L-850B	UNIDIREC.	WHITE	L-868B (E)	
17RTD-08140	EL113	L-850B	UNIDIREC.	WHITE	L-868B (E)	
17RTD-08141	EL113	L-850B	UNIDIREC.	WHITE	L-868B (E)	
17RTD-08142	EL113	L-850B	UNIDIREC.	WHITE	L-868B (E)	
17RTD-08143	EL113	L-850B	UNIDIREC.	WHITE	L-868B (N)	
17RTD-08144	EL113	L-850B	UNIDIREC.	WHITE	L-868B (N)	
17RTD-08145	EL113	L-850B	UNIDIREC.	WHITE	L-868B (E)	
17RTD-08146	EL113	L-850B	UNIDIREC.	WHITE	L-868B (E)	
17RTD-08147	EL113	L-850B	UNIDIREC.	WHITE	L-868B (E)	
17RTD-08148	EL113	L-850B	UNIDIREC.	WHITE	L-868B (E)	
17RTD-08149	EL113	L-850B	UNIDIREC.	WHITE	L-868B (E)	
17RTD-08150	EL113	L-850B	UNIDIREC.	WHITE	L-868B (E)	
17RTD-08151	EL113	L-850B	UNIDIREC.	WHITE	L-868B (E)	
17RTD-08152	EL113	L-850B	UNIDIREC.	WHITE	L-868B (E)	
17RTD-08153	EL113	L-850B	UNIDIREC.	WHITE	L-868B (E)	
17RTD-08154	EL113	L-850B	UNIDIREC.	WHITE	L-868B (E)	
17RTD-08155	EL113	L-850B	UNIDIREC.	WHITE	L-868B (E)	
17RTD-08156	EL113	L-850B	UNIDIREC.	WHITE	L-868B (E)	
17RTD-08157	EL113	L-850B	UNIDIREC.	WHITE	L-868B (E)	
17RTD-08158	EL113	L-850B	UNIDIREC.	WHITE	L-868B (E)	
17RTD-08159	EL113	L-850B	UNIDIREC.	WHITE	L-868B (E)	
17RTD-08160	EL113	L-850B	UNIDIREC.	WHITE	L-868B (E)	
17RTD-08161	EL113	L-850B	UNIDIREC.	WHITE	L-868B (E)	
17RTD-08162	EL113	L-850B	UNIDIREC.	WHITE	L-868B (E)	
17RTD-08163	EL113	L-850B	UNIDIREC.	WHITE	L-868B (E)	
17RTD-08164	EL113	L-850B	UNIDIREC.	WHITE	L-868B (E)	
17RTD-08165	EL113	L-850B	UNIDIREC.	WHITE	L-868B (E)	

MATCH LINE SEE SHEET EL856

NOTES:

1. SEE SHEETS E-001 FOR GENERAL ELECTRICAL NOTES.

SHEET NOTES:

1. FOR (N) BASE CANS ON TWY M6 REFER TO EL900 SERIES. FOR ALL OTHER (N) BASE CANS CONTRACTOR MUST SURVEY (E) BASE CAN LOCATION AND INSTALL (N) BASE CAN AT SAME LOCATION AND ORIENTATION AND ALIGNMENT.
2. ALL LIGHTS MUST BE NEW AND LED U.O.N.
3. FOR ALL LIGHT FIXTURES (NEW AND REINSTALLED), FURNISH AND INSTALL CONNECTORS, SPACER RINGS, FLANGE RING, WITH PAVEMENT DAM, BOLTS, AND WASHERS.
4. FOR NEW LIGHTS, FURNISH AND INSTALL NEW TRANSFORMER SIZE PER MFG. RECOMMENDATIONS. SUPPLY WITH 6.6A PRIMARY/ 6.6A SECONDARY.
5. FOR EXISTING LIGHTS TO BE REMOVED AND REINSTALLED REFER TO SCHEDULE BELOW:

LIGHT TYPE	XFMR TYPE
TWY CTL UNIDIRECTIONAL (LED)	30/45

6. RECORD NUMBER AND DEPTH OF SPACERS.
7. L-868B BASE CAN HEIGHT SHALL BE 22" U.O.N. ON AREA PLANS.
8. L-867B BASE CAN HEIGHT SHALL BE 22" U.O.N. ON AREA PLANS.

ABBREVIATIONS:

BIDIREC. – BIDIRECTIONAL
OMNI – OMNIDIRECTIONAL
UNIDIREC. – UNIDIRECTIONAL
EXT – EXTENSION
(L) – LED (UNLESS OTHERWISE NOTED)
MFG. – MANUFACTURER
(RR) – REMOVE AND REINSTALL
(E) – EXISTING TO BE REUSED
(N) – NEW
N/A – NOT APPLICABLE

COLORADO LICENSED
AARON LEA
52246
2/15/19
PROFESSIONAL ENGINEER

CITY & COUNTY of DENVER

DENVER INTERNATIONAL AIRPORT

LEAN ENGINEERING

RUNWAY 17R-35L COMPLEX PAVEMENT REHABILITATION PACKAGE 1

ISSUE RECORD

NO.	BY	PURPOSE	DATE	CKD
1	LE	50% DESIGN	09/14/18	DL
2	LE	90% DESIGN	10/26/18	DL
3	LE	BID	12/26/18	DL
4	LE	ADDENDUM 2	1/17/19	DL
5	LE	CONSTRUCTION	2/15/19	DL

SCALE: AS INDICATED
DATE: FEBRUARY 15, 2019
DRAWN BY: KV
CHECKED BY: JA
FAA AIP NO:
WORK BREAKDOWN NO.
DESIGN CONTRACT NO. 201735882
CONST. CONTRACT NO. 201846271
VOLUME NO.
SHEET TITLE: FIXTURE SCHEDULE CIRCUIT 17RTD□ (1 OF 2)
SHEET NO. EL855
342 OF 396
CADD FILE NO. _201735882-B1EELD-6334

D:\dropbox (lean photometrics)\active projects\1571801a rah den 17r-35l reconstruction\01 drawings\working drawings\sheets_201735882-B1EELD-6334.dwg Feb 12, 2019 - 5:32pm Kat

FIXTURE ID	REF. DW	FAA DESIGNATION	FIXTURE TYPE	LENS COLOR	BASE CAN	COMMENTS
MATCH LINE SEE SHEET EL855						
17RTD-08166	EL113	L-850B	UNIDIREC.	WHITE	L-868B (E)	
17RTD-08167	EL113	L-850B	UNIDIREC.	WHITE	L-868B (E)	
17RTD-08168	EL113	L-850B	UNIDIREC.	WHITE	L-868B (E)	
17RTD-08079	EL114	L-850B	UNIDIREC.	WHITE	L-868B (E)	
17RTD-08080	EL114	L-850B	UNIDIREC.	WHITE	L-868B (E)	
17RTD-08081	EL114	L-850B	UNIDIREC.	WHITE	L-868B (E)	
17RTD-08082	EL114	L-850B	UNIDIREC.	WHITE	L-868B (E)	
17RTD-08083	EL114	L-850B	UNIDIREC.	WHITE	L-868B (E)	
17RTD-08084	EL114	L-850B	UNIDIREC.	WHITE	L-868B (E)	
17RTD-08085	EL114	L-850B	UNIDIREC.	WHITE	L-868B (E)	
17RTD-08086	EL114	L-850B	UNIDIREC.	WHITE	L-868B (E)	
17RTD-08087	EL114	L-850B	UNIDIREC.	WHITE	L-868B (E)	
17RTD-08088	EL114	L-850B	UNIDIREC.	WHITE	L-868B (E)	
17RTD-08089	EL114	L-850B	UNIDIREC.	WHITE	L-868B (E)	
17RTD-08090	EL114	L-850B	UNIDIREC.	WHITE	L-868B (N)	
17RTD-08169	EL114	L-850B	UNIDIREC.	WHITE	L-868B (E)	
17RTD-08170	EL114	L-850B	UNIDIREC.	WHITE	L-868B (N)	
17RTD-08171	EL114	L-850B	UNIDIREC.	WHITE	L-868B (N)	
17RTD-08172	EL114	L-850B	UNIDIREC.	WHITE	L-868B (E)	
17RTD-08173	EL114	L-850B	UNIDIREC.	WHITE	L-868B (E)	
17RTD-08174	EL114	L-850B	UNIDIREC.	WHITE	L-868B (E)	
17RTD-08175	EL114	L-850B	UNIDIREC.	WHITE	L-868B (E)	
17RTD-08176	EL114	L-850B	UNIDIREC.	WHITE	L-868B (E)	
17RTD-08177	EL114	L-850B	UNIDIREC.	WHITE	L-868B (E)	
17RTD-08178	EL114	L-850B	UNIDIREC.	WHITE	L-868B (E)	
17RTD-08179	EL114	L-850B	UNIDIREC.	WHITE	L-868B (N)	
17RTD-08180	EL114	L-850B	UNIDIREC.	WHITE	L-868B (N)	

NOTES:

1. SEE SHEETS E-001 FOR GENERAL ELECTRICAL NOTES.

SHEET NOTES:

1. FOR (N) BASE CANS ON TWY M6 REFER TO EL900 SERIES. FOR ALL OTHER (N) BASE CANS CONTRACTOR MUST SURVEY (E) BASE CAN LOCATION AND INSTALL (N) BASE CAN AT SAME LOCATION AND ORIENTATION AND ALIGNMENT.
2. ALL LIGHTS MUST BE NEW AND LED U.O.N.
3. FOR ALL LIGHT FIXTURES (NEW AND REINSTALLED), FURNISH AND INSTALL CONNECTORS, SPACER RINGS, FLANGE RING, WITH PAVEMENT DAM, BOLTS, AND WASHERS.
4. FOR NEW LIGHTS, FURNISH AND INSTALL NEW TRANSFORMER SIZE PER MFG. RECOMMENDATIONS. SUPPLY WITH 6.6A PRIMARY/ 6.6A SECONDARY.
5. FOR EXISTING LIGHTS TO BE REMOVED AND REINSTALLED REFER TO SCHEDULE BELOW:

LIGHT TYPE	XFMR TYPE
TWY CTL UNIDIRECTIONAL (LED)	30/45

6. RECORD NUMBER AND DEPTH OF SPACERS.
7. L-868B BASE CAN HEIGHT SHALL BE 22" U.O.N. ON AREA PLANS.
8. L-867B BASE CAN HEIGHT SHALL BE 22" U.O.N. ON AREA PLANS.

ABBREVIATIONS:

BIDIREC. – BIDIRECTIONAL
OMNI – OMNIDIRECTIONAL
UNIDIREC. – UNIDIRECTIONAL
EXT – EXTENSION
(L) – LED (UNLESS OTHERWISE NOTED)
MFG. – MANUFACTURER
(RR) – REMOVE AND REINSTALL
(E) – EXISTING TO BE REUSED
(N) – NEW
N/A – NOT APPLICABLE

COLORADO LICENSED
JORON LEA
52246
2/15/19
PROFESSIONAL ENGINEER

CITY & COUNTY of DENVER

DENVER INTERNATIONAL AIRPORT

LEAN ENGINEERING

RUNWAY 17R-35L COMPLEX PAVEMENT REHABILITATION PACKAGE 1

ISSUE RECORD

NO.	BY	PURPOSE	DATE	CKD
1	LE	50% DESIGN	09/14/18	DL
2	LE	90% DESIGN	10/26/18	DL
3	LE	BID	12/26/18	DL
4	LE	CONSTRUCTION	2/15/19	DL

SCALE: AS INDICATED
DATE: FEBRUARY 15, 2019
DRAWN BY: KV
CHECKED BY: JA
FAA AIP NO:
WORK BREAKDOWN NO.
DESIGN CONTRACT NO. 201735882
CONST. CONTRACT NO. 201846271
VOLUME NO.
SHEET TITLE: FIXTURE SCHEDULE CIRCUIT 17RTD (2 OF 2)
SHEET NO. EL856
343 OF 396
CADD FILE NO. _201735882-B1EELD-6334

D:\dropbox (lean photometrics)\active projects\1571801a rah den 17r-35l reconstruction\01 drawings\working drawings\sheets_201735882-B1EELD-6334.dwg Feb 12, 2019 - 5:33pm Kat

FIXTURE ID	REF. DWG	FAA DESIGNATION	FIXTURE TYPE	LENS COLOR	BASE CAN	COMMENTS
35LTD□-08001	EL102	L-850B	UNIDIREC.	WHITE	L-868B (E)	
35LTD□-08002	EL102	L-850B	UNIDIREC.	WHITE	L-868B (E)	
35LTD□-08003	EL102	L-850B	UNIDIREC.	WHITE	L-868B (E)	
35LTD□-08004	EL102	L-850B	UNIDIREC.	WHITE	L-868B (E)	
35LTD□-08005	EL102	L-850B	UNIDIREC.	WHITE	L-868B (E)	
35LTD□-08006	EL102	L-850B	UNIDIREC.	WHITE	L-868B (E)	
35LTD□-08007	EL102	L-850B	UNIDIREC.	WHITE	L-868B (E)	
35LTD□-08008	EL102	L-850B	UNIDIREC.	WHITE	L-868B (E)	
35LTD□-08009	EL102	L-850B	UNIDIREC.	WHITE	L-868B (E)	
35LTD□-08010	EL102	L-850B	UNIDIREC.	WHITE	L-868B (E)	
35LTD□-08011	EL102	L-850B	UNIDIREC.	WHITE	L-868B (N)	
35LTD□-08012	EL102	L-850B	UNIDIREC.	WHITE	L-868B (N)	
35LTD□-08013	EL102	L-850B	UNIDIREC.	WHITE	L-868B (E)	
35LTD□-08014	EL102	L-850B	UNIDIREC.	WHITE	L-868B (E)	
35LTD□-08015	EL102	L-850B	UNIDIREC.	WHITE	L-868B (E)	
35LTD□-08016	EL102	L-850B	UNIDIREC.	WHITE	L-868B (E)	
35LTD□-08017	EL102	L-850B	UNIDIREC.	WHITE	L-868B (N)	
35LTD□-08018	EL102	L-850B	UNIDIREC.	WHITE	L-868B (N)	
35LTD□-08019	EL102	L-850B	UNIDIREC.	WHITE	L-868B (E)	
35LTD□-08020	EL102	L-850B	UNIDIREC.	WHITE	L-868B (E)	
35LTD□-08021	EL102	L-850B	UNIDIREC.	WHITE	L-868B (E)	
35LTD□-08022	EL102	L-850B	UNIDIREC.	WHITE	L-868B (E)	
35LTD□-08023	EL102	L-850B	UNIDIREC.	WHITE	L-868B (N)	
35LTD□-08024	EL102	L-850B	UNIDIREC.	WHITE	L-868B (N)	
35LTD□-08025	EL102	L-850B	UNIDIREC.	WHITE	L-868B (E)	
35LTD□-08026	EL102	L-850B	UNIDIREC.	WHITE	L-868B (E)	
35LTD□-08027	EL102	L-850B	UNIDIREC.	WHITE	L-868B (E)	
35LTD□-08028	EL102	L-850B	UNIDIREC.	WHITE	L-868B (E)	
35LTD□-08029	EL102	L-850B	UNIDIREC.	WHITE	L-868B (N)	
35LTD□-08030	EL102	L-850B	UNIDIREC.	WHITE	L-868B (N)	
35LTD□-08031	EL102	L-850B	UNIDIREC.	WHITE	L-868B (E)	
35LTD□-08032	EL102	L-850B	UNIDIREC.	WHITE	L-868B (E)	
35LTD□-08033	EL102	L-850B	UNIDIREC.	WHITE	L-868B (E)	
35LTD□-08034	EL102	L-850B	UNIDIREC.	WHITE	L-868B (N)	
35LTD□-08035	EL102	L-850B	UNIDIREC.	WHITE	L-868B (N)	
35LTD□-08036	EL102	L-850B	UNIDIREC.	WHITE	L-868B (N)	
35LTD□-08037	EL102	L-850B	UNIDIREC.	WHITE	L-868B (E)	
35LTD□-08038	EL102	L-850B	UNIDIREC.	WHITE	L-868B (E)	
35LTD□-08039	EL102	L-850B	UNIDIREC.	WHITE	L-868B (E)	
35LTD□-08040	EL102	L-850B	UNIDIREC.	WHITE	L-868B (E)	
35LTD□-08041	EL102	L-850B	UNIDIREC.	WHITE	L-868B (N)	
35LTD□-08042	EL102	L-850B	UNIDIREC.	WHITE	L-868B (N)	
35LTD□-08043	EL103	L-850B	UNIDIREC.	WHITE	L-868B (E)	
35LTD□-08044	EL103	L-850B	UNIDIREC.	WHITE	L-868B (E)	
35LTD□-08045	EL103	L-850B	UNIDIREC.	WHITE	L-868B (E)	
35LTD□-08046	EL103	L-850B	UNIDIREC.	WHITE	L-868B (E)	
35LTD□-08047	EL103	L-850B	UNIDIREC.	WHITE	L-868B (N)	
35LTD□-08048	EL103	L-850B	UNIDIREC.	WHITE	L-868B (N)	
35LTD□-08049	EL103	L-850B	UNIDIREC.	WHITE	L-868B (E)	
35LTD□-08050	EL103	L-850B	UNIDIREC.	WHITE	L-868B (E)	
35LTD□-08051	EL103	L-850B	UNIDIREC.	WHITE	L-868B (E)	
35LTD□-08052	EL103	L-850B	UNIDIREC.	WHITE	L-868B (E)	
35LTD□-08053	EL103	L-850B	UNIDIREC.	WHITE	L-868B (N)	
35LTD□-08054	EL103	L-850B	UNIDIREC.	WHITE	L-868B (N)	
35LTD□-08055	EL103	L-850B	UNIDIREC.	WHITE	L-868B (E)	
35LTD□-08056	EL103	L-850B	UNIDIREC.	WHITE	L-868B (E)	
35LTD□-08057	EL103	L-850B	UNIDIREC.	WHITE	L-868B (E)	
35LTD□-08058	EL103	L-850B	UNIDIREC.	WHITE	L-868B (E)	
35LTD□-08059	EL103	L-850B	UNIDIREC.	WHITE	L-868B (E)	
35LTD□-08060	EL103	L-850B	UNIDIREC.	WHITE	L-868B (E)	
35LTD□-08061	EL103	L-850B	UNIDIREC.	WHITE	L-868B (E)	
35LTD□-08062	EL103	L-850B	UNIDIREC.	WHITE	L-868B (E)	
35LTD□-08063	EL103	L-850B	UNIDIREC.	WHITE	L-868B (E)	
35LTD□-08064	EL103	L-850B	UNIDIREC.	WHITE	L-868B (E)	
35LTD□-08065	EL103	L-850B	UNIDIREC.	WHITE	L-868B (E)	
35LTD□-08066	EL103	L-850B	UNIDIREC.	WHITE	L-868B (E)	
35LTD□-08067	EL103	L-850B	UNIDIREC.	WHITE	L-868B (E)	
35LTD□-08068	EL103	L-850B	UNIDIREC.	WHITE	L-868B (E)	
35LTD□-08069	EL103	L-850B	UNIDIREC.	WHITE	L-868B (E)	
35LTD□-08070	EL103	L-850B	UNIDIREC.	WHITE	L-868B (E)	
35LTD□-08071	EL103	L-850B	UNIDIREC.	WHITE	L-868B (E)	
35LTD□-08072	EL103	L-850B	UNIDIREC.	WHITE	L-868B (E)	
35LTD□-08073	EL103	L-850B	UNIDIREC.	WHITE	L-868B (E)	
35LTD□-08074	EL103	L-850B	UNIDIREC.	WHITE	L-868B (E)	
35LTD□-08075	EL103	L-850B	UNIDIREC.	WHITE	L-868B (E)	
35LTD□-08076	EL103	L-850B	UNIDIREC.	WHITE	L-868B (E)	
35LTD□-08077	EL103	L-850B	UNIDIREC.	WHITE	L-868B (E)	
35LTD□-08078	EL103	L-850B	UNIDIREC.	WHITE	L-868B (E)	
35LTD□-08079	EL103	L-850B	UNIDIREC.	WHITE	L-868B (E)	
35LTD□-08080	EL103	L-850B	UNIDIREC.	WHITE	L-868B (E)	
35LTD□-08081	EL103	L-850B	UNIDIREC.	WHITE	L-868B (E)	

MATCH LINE SEE SHEET RIGHT

FIXTURE ID	REF. DWG	FAA DESIGNATION	FIXTURE TYPE	LENS COLOR	BASE CAN	COMMENTS

MATCH LINE SEE SHEET LEFT

35LTD□-08082	EL103	L-850B	UNIDIREC.	WHITE	L-868B (E)	
35LTD□-08083	EL103	L-850B	UNIDIREC.	WHITE	L-868B (E)	
35LTD□-08084	EL103	L-850B	UNIDIREC.	WHITE	L-868B (E)	
35LTD□-08085	EL103	L-850B	UNIDIREC.	WHITE	L-868B (E)	
35LTD□-08086	EL103	L-850B	UNIDIREC.	WHITE	L-868B (E)	
35LTD□-08087	EL103	L-850B	UNIDIREC.	WHITE	L-868B (E)	
35LTD□-08088	EL103	L-850B	UNIDIREC.	WHITE	L-868B (E)	
35LTD□-08089	EL103	L-850B	UNIDIREC.	WHITE	L-868B (E)	
35LTD□-08090	EL103	L-850B	UNIDIREC.	WHITE	L-868B (E)	
35LTD□-08091	EL103	L-850B	UNIDIREC.	WHITE	L-868B (E)	
35LTD□-08092	EL103	L-850B	UNIDIREC.	WHITE	L-868B (E)	
35LTD□-08093	EL103	L-850B	UNIDIREC.	WHITE	L-868B (E)	
35LTD□-08094	EL103	L-850B	UNIDIREC.	WHITE	L-868B (E)	
35LTD□-08095	EL103	L-850B	UNIDIREC.	WHITE	L-868B (E)	
35LTD□-08096	EL103	L-850B	UNIDIREC.	WHITE	L-868B (E)	
35LTD□-08097	EL103	L-850B	UNIDIREC.	WHITE	L-868B (E)	
35LTD□-08098	EL103	L-850B	UNIDIREC.	WHITE	L-868B (E)	
35LTD□-08099	EL103	L-850B	UNIDIREC.	WHITE	L-868B (E)	
35LTD□-08100	EL103	L-850B	UNIDIREC.	WHITE	L-868B (E)	
35LTD□-08101	EL103	L-850B	UNIDIREC.	WHITE	L-868B (E)	
35LTD□-08102	EL103	L-850B	UNIDIREC.	WHITE	L-868B (E)	
35LTD□-08103	EL104	L-850B	UNIDIREC.	WHITE	L-868B (E)	
35LTD□-08104	EL104	L-850B	UNIDIREC.	WHITE	L-868B (E)	
35LTD□-08105	EL104	L-850B	UNIDIREC.	WHITE	L-868B (E)	
35LTD□-08106	EL104	L-850B	UNIDIREC.	WHITE	L-868B (E)	
35LTD□-08107	EL104	L-850B	UNIDIREC.	WHITE	L-868B (E)	
35LTD□-08108	EL104	L-850B	UNIDIREC.	WHITE	L-868B (E)	
35LTD□-08109	EL104	L-850B	UNIDIREC.	WHITE	L-868B (E)	
35LTD□-08110	EL104	L-850B	UNIDIREC.	WHITE	L-868B (E)	
35LTD□-08111	EL104	L-850B	UNIDIREC.	WHITE	L-868B (E)	
35LTD□-08112	EL104	L-850B	UNIDIREC.	WHITE	L-868B (E)	
35LTD□-08113	EL104	L-850B	UNIDIREC.	WHITE	L-868B (E)	
35LTD□-08114	EL104	L-850B	UNIDIREC.	WHITE	L-868B (E)	
35LTD□-08115	EL104	L-850B	UNIDIREC.	WHITE	L-868B (E)	
35LTD□-08116	EL104	L-850B	UNIDIREC.	WHITE	L-868B (E)	
35LTD□-08117	EL104	L-850B	UNIDIREC.	WHITE	L-868B (E)	
35LTD□-08118	EL104	L-850B	UNIDIREC.	WHITE	L-868B (E)	
35LTD□-08119	EL104	L-850B	UNIDIREC.	WHITE	L-868B (E)	
35LTD□-08120	EL104	L-850B	UNIDIREC.	WHITE	L-868B (E)	
35LTD□-08121	EL104	L-850B	UNIDIREC.	WHITE	L-868B (E)	
35LTD□-08122	EL104	L-850B	UNIDIREC.	WHITE	L-868B (E)	
35LTD□-08123	EL104	L-850B	UNIDIREC.	WHITE	L-868B (E)	
35LTD□-08124	EL104	L-850B	UNIDIREC.	WHITE	L-868B (E)	
35LTD□-08125	EL104	L-850B	UNIDIREC.	WHITE	L-868B (E)	
35LTD□-08126	EL104	L-850B	UNIDIREC.	WHITE	L-868B (E)	
35LTD□-08127	EL104	L-850B	UNIDIREC.	WHITE	L-868B (E)	
35LTD□-08128	EL104	L-850B	UNIDIREC.	WHITE	L-868B (E)	
35LTD□-08129	EL104	L-850B	UNIDIREC.	WHITE	L-868B (E)	
35LTD□-08130	EL104	L-850B	UNIDIREC.	WHITE	L-868B (E)	
35LTD□-08131	EL104	L-850B	UNIDIREC.	WHITE	L-868B (E)	
35LTD□-08132	EL104	L-850B	UNIDIREC.	WHITE	L-868B (E)	
35LTD□-08133	EL104	L-850B	UNIDIREC.	WHITE	L-868B (E)	
35LTD□-08134	EL104	L-850B	UNIDIREC.	WHITE	L-868B (E)	
35LTD□-08135	EL104	L-850B	UNIDIREC.	WHITE	L-868B (E)	
35LTD□-08136	EL104	L-850B	UNIDIREC.	WHITE	L-868B (N)	
35LTD□-08137	EL104	L-850B	UNIDIREC.	WHITE	L-868B (N)	
35LTD□-08138	EL104	L-850B	UNIDIREC.	WHITE	L-868B (N)	
35LTD□-08139	EL104	L-850B	UNIDIREC.	WHITE	L-868B (E)	
35LTD□-08140	EL104	L-850B	UNIDIREC.	WHITE	L-868B (E)	
35LTD□-08141	EL104	L-850B	UNIDIREC.	WHITE	L-868B (E)	
35LTD□-08142	EL104	L-850B	UNIDIREC.	WHITE	L-868B (E)	
35LTD□-08143	EL104	L-850B	UNIDIREC.	WHITE	L-868B (E)	
35LTD□-08144	EL104	L-850B	UNIDIREC.	WHITE	L-868B (E)	
35LTD□-08145	EL104	L-850B	UNIDIREC.	WHITE	L-868B (E)	
35LTD□-08146	EL104	L-850B	UNIDIREC.	WHITE	L-868B (E)	
35LTD□-08147	EL104	L-850B	UNIDIREC.	WHITE	L-868B (E)	
35LTD□-08148	EL104	L-850B	UNIDIREC.	WHITE	L-868B (E)	
35LTD□-08149	EL104	L-850B	UNIDIREC.	WHITE	L-868B (E)	
35LTD□-08150	EL104	L-850B	UNIDIREC.	WHITE	L-868B (E)	
35LTD□-08151	EL104	L-850B	UNIDIREC.	WHITE	L-868B (E)	
35LTD□-08152	EL104	L-850B	UNIDIREC.	WHITE	L-868B (E)	
35LTD□-08153	EL104	L-850B	UNIDIREC.	WHITE	L-868B (E)	
35LTD□-08154	EL104	L-850B	UNIDIREC.	WHITE	L-868B (E)	
35LTD□-08155	EL104	L-850B	UNIDIREC.	WHITE	L-868B (E)	
35LTD□-08156	EL104	L-850B	UNIDIREC.	WHITE	L-868B (E)	
35LTD□-08157	EL104	L-850B	UNIDIREC.	WHITE	L-868B (E)	
35LTD□-08158	EL104	L-850B	UNIDIREC.	WHITE	L-868B (E)	

MATCH LINE SEE SHEET EL858

NOTES:

1. SEE SHEETS E-001 FOR GENERAL ELECTRICAL NOTES.

SHEET NOTES:

1. FOR (N) BASE CANS ON TWY M6 REFER TO EL900 SERIES. FOR ALL OTHER (N) BASE CANS CONTRACTOR MUST SURVEY (E) BASE CAN LOCATION AND INSTALL (N) BASE CAN AT SAME LOCATION AND ORIENTATION AND ALIGNMENT.
2. ALL LIGHTS MUST BE NEW AND LED U.O.N.
3. FOR ALL LIGHT FIXTURES (NEW AND REINSTALLED), FURNISH AND INSTALL CONNECTORS, SPACER RINGS, FLANGE RING, WITH PAVEMENT DAM, BOLTS, AND WASHERS.
4. FOR NEW LIGHTS, FURNISH AND INSTALL NEW TRANSFORMER SIZE PER MFG. RECOMMENDATIONS. SUPPLY WITH 6.6A PRIMARY/ 6.6A SECONDARY.
5. FOR EXISTING LIGHTS TO BE REMOVED AND REINSTALLED REFER TO SCHEDULE BELOW:

LIGHT TYPE	XFMR TYPE
TWY CTL UNIDIRECTIONAL (LED)	30/45

6. RECORD NUMBER AND DEPTH OF SPACERS.
7. L-868B BASE CAN HEIGHT SHALL BE 22" U.O.N. ON AREA PLANS.
8. L-867B BASE CAN HEIGHT SHALL BE 22" U.O.N. ON AREA PLANS.

ABBREVIATIONS:

BIDIREC. – BIDIRECTIONAL
OMNI – OMNIDIRECTIONAL
UNIDIREC. – UNIDIRECTIONAL
EXT – EXTENSION
(L) – LED (UNLESS OTHERWISE NOTED)
MFG. – MANUFACTURER
(RR) – REMOVE AND REINSTALL
(E) – EXISTING TO BE REUSED
(N) – NEW
N/A – NOT APPLICABLE

COLORADO LICENSED
DIXON LEA
52246
2/15/19
PROFESSIONAL ENGINEER

CITY & COUNTY of DENVER

DENVER INTERNATIONAL AIRPORT

LEAN ENGINEERING

RUNWAY 17R-35L COMPLEX PAVEMENT REHABILITATION PACKAGE 1

ISSUE RECORD

NO.	BY	PURPOSE	DATE	CKD
1	LE	50% DESIGN	09/14/18	DL
2	LE	90% DESIGN	10/26/18	DL
3	LE	BID	12/26/18	DL
4	LE	CONSTRUCTION	2/15/19	DL

SCALE: AS INDICATED
DATE: FEBRUARY 15, 2019
DRAWN BY: KV
CHECKED BY: JA
FAA AIP NO:
WORK BREAKDOWN NO.
DESIGN CONTRACT NO. 201735882
CONST. CONTRACT NO. 201846271
VOLUME NO.
SHEET TITLE: FIXTURE SCHEDULE CIRCUIT 35LTD□ (1 OF 2)
SHEET NO. EL857
344 OF 396
CADD FILE NO. _201735882-B1EELD-6334

D:\dropbox (lean photometrics)\active projects\15718010a rsh den 17r-35l reconstruction\01 drawings\working drawings\Sheets_201735882-B1EELD-6334.dwg Feb 12, 2019 - 5:33pm Kat

FIXTURE ID	REF. DWG	FAA DESIGNATION	FIXTURE TYPE	LENS COLOR	BASE CAN	COMMENTS
MATCH LINE SEE SHEET EL857						
35LTD□-08159	EL104	L-850B	UNIDIREC.	WHITE	L-868B (E)	
35LTD□-08160	EL104	L-850B	UNIDIREC.	WHITE	L-868B (E)	
35LTD□-08161	EL104	L-850B	UNIDIREC.	WHITE	L-868B (E)	
35LTD□-08162	EL104	L-850B	UNIDIREC.	WHITE	L-868B (E)	
35LTD□-08163	EL105	L-850B	UNIDIREC.	WHITE	L-868B (E)	
35LTD□-08164	EL105	L-850B	UNIDIREC.	WHITE	L-868B (E)	
35LTD□-08165	EL105	L-850B	UNIDIREC.	WHITE	L-868B (E)	
35LTD□-08166	EL105	L-850B	UNIDIREC.	WHITE	L-868B (E)	
35LTD□-08167	EL105	L-850B	UNIDIREC.	WHITE	L-868B (E)	
35LTD□-08168	EL105	L-850B	UNIDIREC.	WHITE	L-868B (E)	
35LTD□-08169	EL105	L-850B	UNIDIREC.	WHITE	L-868B (E)	
35LTD□-08170	EL105	L-850B	UNIDIREC.	WHITE	L-868B (E)	
35LTD□-08171	EL105	L-850B	UNIDIREC.	WHITE	L-868B (E)	
35LTD□-08172	EL105	L-850B	UNIDIREC.	WHITE	L-868B (E)	
35LTD□-08173	EL105	L-850B	UNIDIREC.	WHITE	L-868B (E)	
35LTD□-08174	EL105	L-850B	UNIDIREC.	WHITE	L-868B (E)	
35LTD□-08175	EL105	L-850B	UNIDIREC.	WHITE	L-868B (E)	
35LTD□-08176	EL105	L-850B	UNIDIREC.	WHITE	L-868B (E)	
35LTD□-08177	EL105	L-850B	UNIDIREC.	WHITE	L-868B (E)	
35LTD□-08178	EL105	L-850B	UNIDIREC.	WHITE	L-868B (E)	
35LTD□-08179	EL105	L-850B	UNIDIREC.	WHITE	L-868B (E)	
35LTD□-08180	EL105	L-850B	UNIDIREC.	WHITE	L-868B (E)	

NOTES:

1. SEE SHEETS E-001 FOR GENERAL ELECTRICAL NOTES.

SHEET NOTES:

1. FOR (N) BASE CANS ON TWY M6 REFER TO EL900 SERIES. FOR ALL OTHER (N) BASE CANS CONTRACTOR MUST SURVEY (E) BASE CAN LOCATION AND INSTALL (N) BASE CAN AT SAME LOCATION AND ORIENTATION AND ALIGNMENT.
2. ALL LIGHTS MUST BE NEW AND LED U.O.N.
3. FOR ALL LIGHT FIXTURES (NEW AND REINSTALLED), FURNISH AND INSTALL CONNECTORS, SPACER RINGS, FLANGE RING, WITH PAVEMENT DAM, BOLTS, AND WASHERS.
4. FOR NEW LIGHTS, FURNISH AND INSTALL NEW TRANSFORMER SIZE PER MFG. RECOMMENDATIONS. SUPPLY WITH 6.6A PRIMARY/ 6.6A SECONDARY.
5. FOR EXISTING LIGHTS TO BE REMOVED AND REINSTALLED REFER TO SCHEDULE BELOW:

LIGHT TYPE	XFMR TYPE
TWY CTL UNIDIRECTIONAL (LED)	30/45

6. RECORD NUMBER AND DEPTH OF SPACERS.
7. L-868B BASE CAN HEIGHT SHALL BE 22" U.O.N. ON AREA PLANS.
8. L-867B BASE CAN HEIGHT SHALL BE 22" U.O.N. ON AREA PLANS.

ABBREVIATIONS:

BIDIREC. – BIDIRECTIONAL
OMNI – OMNIDIRECTIONAL
UNIDIREC. – UNIDIRECTIONAL
EXT – EXTENSION
(L) – LED (UNLESS OTHERWISE NOTED)
MFG. – MANUFACTURER
(RR) – REMOVE AND REINSTALL
(E) – EXISTING TO BE REUSED
(N) – NEW
N/A – NOT APPLICABLE

COLORADO LICENSED
CORON LEAN
52246
2/15/19
PROFESSIONAL ENGINEER

CITY & COUNTY of DENVER

DENVER INTERNATIONAL AIRPORT

LEAN ENGINEERING

RUNWAY 17R-35L COMPLEX PAVEMENT REHABILITATION PACKAGE 1

ISSUE RECORD

NO.	BY	PURPOSE	DATE	CKD
1	LE	50% DESIGN	09/14/18	DL
2	LE	90% DESIGN	10/26/18	DL
3	LE	BID	12/26/18	DL
4	LE	CONSTRUCTION	2/15/19	DL

SCALE: AS INDICATED
DATE: FEBRUARY 15, 2019
DRAWN BY: KV
CHECKED BY: JA
FAA AIP NO:
WORK BREAKDOWN NO.
DESIGN CONTRACT NO. 201735882
CONST. CONTRACT NO. 201846271
VOLUME NO.
SHEET TITLE: FIXTURE SCHEDULE CIRCUIT 35LTD□ (2 OF 2)
SHEET NO. EL858
345 OF 396
CADD FILE NO. _201735882-B1EELD-6334

D:\dropbox (lean photometrics)\active projects\1571801a rah den 17r-35l reconstruction\01 drawings\working drawings\sheets_201735882-B1EELD-6334.dwg Feb 12, 2019 - 5:33pm Kat

FIXTURE ID	REF. DWG	FAA DESIGNATION	FIXTURE TYPE	LENS COLOR	BASE CAN	COMMENTS
TMWW-08001	EL102	L-804	UNIDIREC.	YELLOW	L-867B (E)	
TMWW-08002	EL102	L-804	UNIDIREC.	YELLOW	L-867B (E)	
TMWW-08003	EL102	L-804	UNIDIREC.	YELLOW	L-867B (E)	
TMWW-08004	EL102	L-804	UNIDIREC.	YELLOW	L-867B (E)	
TMWW-08005	EL103	L-804	UNIDIREC.	YELLOW	L-867B (E)	
TMWW-08006	EL103	L-804	UNIDIREC.	YELLOW	L-867B (E)	
TMWW-08007	EL105	L-804	UNIDIREC.	YELLOW	L-867B (E)	
TMWW-08008	EL105	L-804	UNIDIREC.	YELLOW	L-867B (E)	
TMWW-08009	EL106	L-804	UNIDIREC.	YELLOW	L-867B (E)	
TMWW-08010	EL106	L-804	UNIDIREC.	YELLOW	L-867B (E)	
TMWW-08011	EL109	L-804	UNIDIREC.	YELLOW	L-867B (N)	
TMWW-08012	EL109	L-804	UNIDIREC.	YELLOW	L-867B (N)	
TMWW-08013	EL111	L-804	UNIDIREC.	YELLOW	L-867B (E)	
TMWW-08014	EL111	L-804	UNIDIREC.	YELLOW	L-867B (E)	
TMWW-08015	EL112	L-804	UNIDIREC.	YELLOW	L-867B (E)	
TMWW-08016	EL112	L-804	UNIDIREC.	YELLOW	L-867B (E)	
TMWW-08017	EL113	L-804	UNIDIREC.	YELLOW	L-867B (E)	
TMWW-08018	EL114	L-804	UNIDIREC.	YELLOW	L-867B (E)	
TMWW-08019	EL114	L-804	UNIDIREC.	YELLOW	L-867B (E)	
TMWW-08020	EL114	L-804	UNIDIREC.	YELLOW	L-867B (E)	
TMWW-08023	EL115	L-804	UNIDIREC.	YELLOW	L-867B (E)	
TMWW-08024	EL115	L-804	UNIDIREC.	YELLOW	L-867B (E)	
TMWW-08025	EL116	L-804	UNIDIREC.	YELLOW	L-867B (N)	
TMWW-08026	EL116	L-804	UNIDIREC.	YELLOW	L-867B (N)	
TMWW-08021	EL116	COVER PLATE	N/A	N/A	L-867B (E)	
TMWW-08022	EL116	COVER PLATE	N/A	N/A	L-867B (E)	

NOTES:

1. SEE SHEETS E-001 FOR GENERAL ELECTRICAL NOTES.

SHEET NOTES:

1. FOR (N) BASE CANS ON TWY M6 REFER TO EL900 SERIES. FOR ALL OTHER (N) BASE CANS CONTRACTOR MUST SURVEY (E) BASE CAN LOCATION AND INSTALL (N) BASE CAN AT SAME LOCATION AND ORIENTATION AND ALIGNMENT.
2. ALL LIGHTS MUST BE NEW AND LED U.O.N.
3. FOR ALL LIGHT FIXTURES (NEW AND REINSTALLED), FURNISH AND INSTALL CONNECTORS, SPACER RINGS, FLANGE RING, WITH PAVEMENT DAM, BOLTS, AND WASHERS.
4. FOR NEW LIGHTS, FURNISH AND INSTALL NEW TRANSFORMER SIZE PER MFG. RECOMMENDATIONS. SUPPLY WITH 6.6A PRIMARY/ 6.6A SECONDARY.
5. FOR EXISTING LIGHTS TO BE REMOVED AND REINSTALLED REFER TO SCHEDULE BELOW:

LIGHT TYPE	XFMR TYPE
TWY CTL UNIDIRECTIONAL (LED)	30/45

6. RECORD NUMBER AND DEPTH OF SPACERS.
7. L-868B BASE CAN HEIGHT SHALL BE 22" U.O.N. ON AREA PLANS.
8. L-867B BASE CAN HEIGHT SHALL BE 22" U.O.N. ON AREA PLANS.

ABBREVIATIONS:

BIDIREC. – BIDIRECTIONAL
OMNI – OMNIDIRECTIONAL
UNIDIREC. – UNIDIRECTIONAL
EXT – EXTENSION
(L) – LED (UNLESS OTHERWISE NOTED)
MFG. – MANUFACTURER
(RR) – REMOVE AND REINSTALL
(E) – EXISTING TO BE REUSED
(N) – NEW
N/A – NOT APPLICABLE

COLORADO LICENSED
JORON LEA
52246
2/15/19
PROFESSIONAL ENGINEER

CITY & COUNTY of DENVER

DENVER INTERNATIONAL AIRPORT

LEAN ENGINEERING

RUNWAY 17R-35L COMPLEX PAVEMENT REHABILITATION PACKAGE 1

ISSUE RECORD

NO.	BY	PURPOSE	DATE	CKD
1	LE	50% DESIGN	09/14/18	DL
2	LE	90% DESIGN	10/26/18	DL
3	LE	BID	12/26/18	DL
4	LE	CONSTRUCTION	2/15/19	DL

SCALE: AS INDICATED
DATE: FEBRUARY 15, 2019
DRAWN BY: KV
CHECKED BY: JA
FAA AIP NO:
WORK BREAKDOWN NO.
DESIGN CONTRACT NO. 201735882
CONST. CONTRACT NO. 201846271
VOLUME NO.
SHEET TITLE: FIXTURE SCHEDULE CIRCUIT TMWW
SHEET NO. EL859
346 OF 396
CADD FILE NO. _201735882-B1EELD-6334

D:\dropbox (lean photometrics)\active projects\1571801a rah den 17r-35l reconstruction\01 drawings\working drawings\sheets_201735882-B1EELD-6334.dwg Feb 12, 2019 - 5:33pm Kat

RUNWAY SIDE OF HOLD-SHORT

FIXTURE ID - LEAD ON	FIXTURE ID - LEAD OFF	REF. DW	FAA DESIGNATION	FIXTURE TYPE	LENS COLOR	BASE CAN	COMMENTS
TM1SB2A-08001	TM1SB3-08001	EL102	L-852C	BIDIREC.	GREEN/GREEN	L-868B (E)	DUAL CIRCUIT
TM1SB2A-08002	TM1SB3-08002	EL102	L-852C	BIDIREC.	YELLOW/YELLOW	L-868B (E)	DUAL CIRCUIT
TM1SB2A-08003	TM1SB3-08003	EL102	L-852C	BIDIREC.	GREEN/GREEN	L-868B (E)	DUAL CIRCUIT
TM1SB2A-08004	TM1SB3-08004	EL102	L-852D	BIDIREC.	YELLOW/YELLOW	L-868B (E)	DUAL CIRCUIT
TM1SB2B-08001	TM1SB3-08005	EL102	L-852K	BIDIREC.	GREEN/GREEN	L-868B (E)	DUAL CIRCUIT
TM1SB2B-08002	TM1SB3-08006	EL102	COVER PLATE	N/A	N/A	L-868B (E)	N/A
TM1SB2B-08003	TM1SB3-08007	EL102	L-852K	BIDIREC.	YELLOW/YELLOW	L-868B (E)	DUAL CIRCUIT
TM1SB2B-08004	TM1SB3-08008	EL102	COVER PLATE	N/A	N/A	L-868B (E)	N/A
TM1SB2B-08005	TM1SB3-08009	EL102	L-852K	BIDIREC.	GREEN/GREEN	L-868B (N)	DUAL CIRCUIT
TM1SB2B-08006	TM1SB3-08010	EL102	COVER PLATE	N/A	N/A	L-868B (E)	N/A
TM1SB2B-08007	TM1SB3-08011	EL102	L-852K	BIDIREC.	YELLOW/YELLOW	L-868B (E)	DUAL CIRCUIT
TM1SB2B-08008	TM1SB3-08012	EL102	COVER PLATE	N/A	N/A	L-868B (E)	N/A
TM1SB2B-08009	TM1SB3-08013	EL102	L-852K	BIDIREC.	GREEN/GREEN	L-868B (E)	DUAL CIRCUIT
TM1SB2B-08010	TM1SB3-08014	EL102	COVER PLATE	N/A	N/A	L-868B (E)	N/A
TM1SB2B-08011	TM1SB3-08015	EL102	L-852K	BIDIREC.	YELLOW/YELLOW	L-868B (E)	DUAL CIRCUIT
TM1SB2B-08012	TM1SB3-08016	EL102	COVER PLATE	N/A	N/A	L-868B (E)	N/A
TM1SB2B-08013	TM1SB3-08017	EL102	L-852K	BIDIREC.	GREEN/GREEN	L-868B (E)	DUAL CIRCUIT
TM1SB2B-08014	TM1SB3-08018	EL102	COVER PLATE	N/A	N/A	L-868B (E)	N/A
TM1SB2B-08015	TM1SB3-08019	EL102	L-852K	BIDIREC.	YELLOW/YELLOW	L-868B (N)	DUAL CIRCUIT
TM1SB2B-08017	TM1SB3-08021	EL102	L-852K	BIDIREC.	GREEN/GREEN	L-868B (N)	DUAL CIRCUIT
TM1SB2B-08019	TM1SB3-08023	EL102	L-852K	BIDIREC.	GREEN/GREEN	L-868B (N)	DUAL CIRCUIT

NOTES:

1. SEE SHEETS E-001 FOR GENERAL ELECTRICAL NOTES.

SHEET NOTES:

1. FOR (N) BASE CANS ON TWY M6 REFER TO EL900 SERIES. FOR ALL OTHER (N) BASE CANS CONTRACTOR MUST SURVEY (E) BASE CAN LOCATION AND INSTALL (N) BASE CAN AT SAME LOCATION AND ORIENTATION AND ALIGNMENT.
2. ALL LIGHTS MUST BE NEW AND LED U.O.N.
3. FOR ALL LIGHT FIXTURES (NEW AND REINSTALLED), FURNISH AND INSTALL CONNECTORS, SPACER RINGS, FLANGE RING, WITH PAVEMENT DAM, BOLTS, AND WASHERS.
4. FOR NEW LIGHTS, FURNISH AND INSTALL NEW TRANSFORMER SIZE PER MFG. RECOMMENDATIONS. SUPPLY WITH 6.6A PRIMARY/ 6.6A SECONDARY.
5. FOR EXISTING LIGHTS TO BE REMOVED AND REINSTALLED REFER TO SCHEDULE BELOW:

LIGHT TYPE	XFMR TYPE
TWY CTL UNIDIRECTIONAL (LED)	30/45

6. RECORD NUMBER AND DEPTH OF SPACERS.
7. L-868B BASE CAN HEIGHT SHALL BE 22" U.O.N. ON AREA PLANS.
8. L-867B BASE CAN HEIGHT SHALL BE 22" U.O.N. ON AREA PLANS.

ABBREVIATIONS:

BIDIREC. – BIDIRECTIONAL
OMNI – OMNIDIRECTIONAL
UNIDIREC. – UNIDIRECTIONAL
EXT – EXTENSION
(L) – LED (UNLESS OTHERWISE NOTED)
MFG. – MANUFACTURER
(RR) – REMOVE AND REINSTALL
(E) – EXISTING TO BE REUSED
(N) – NEW
N/A – NOT APPLICABLE

COLORADO LICENSED
GORON LEA
52246
2/15/19
PROFESSIONAL ENGINEER

CITY & COUNTY of DENVER

DENVER INTERNATIONAL AIRPORT

LEAN ENGINEERING

RUNWAY 17R-35L COMPLEX PAVEMENT REHABILITATION PACKAGE 1

ISSUE RECORD

NO.	BY	PURPOSE	DATE	CKD
1	LE	50% DESIGN	09/14/18	DL
2	LE	90% DESIGN	10/26/18	DL
3	LE	BID	12/26/18	DL
4	LE	ADDENDUM 2	1/17/19	DL
5	LE	CONSTRUCTION	2/15/19	DL

SCALE AS INDICATED

DATE FEBRUARY 15, 2019

DRAWN BY: KV

CHECKED BY: JA

FAA AIP NO:

WORK BREAKDOWN NO.

DESIGN CONTRACT NO. 201735882

CONST. CONTRACT NO. 201846271

VOLUME NO.

SHEET TITLE

FIXTURE SCHEDULE TWY A

SHEET NO. EL860

CADD FILE NO. _201735882-B1EELD-6334

D:\dropbox (lean photometrics)\active projects\1571801a rah den 17r-35l reconstruction\01 drawings\working drawings\sheets_201735882-B1EELD-6334.dwg Feb 12, 2019 - 5:33pm Kat

RUNWAY SIDE OF HOLD-SHORT

FIXTURE ID - LEAD ON	FIXTURE ID - LEAD OFF	REF. DW[illegible]	FAA DES[illegible]NATION	FIXTURE TY[illegible]E	LENS COLOR	BASE CAN	COMMENTS
TM2SB2A-08001	TM2SB3-08001	EL102	L-852C	BIDIREC.	[illegible]REEN[illegible]REEN	L-868B (E)	DUAL CIRCUIT
TM2SB2A-08002	TM2SB3-08002	EL102	L-852C	BIDIREC.	YELLOW[illegible]YELLOW	L-868B (E)	DUAL CIRCUIT
TM2SB2A-08003	TM2SB3-08003	EL102	L-852C	BIDIREC.	[illegible]REEN[illegible]REEN	L-868B (E)	DUAL CIRCUIT
TM2SB2A-08004	TM2SB3-08004	EL102	L-852D	BIDIREC.	YELLOW[illegible]YELLOW	L-868B (E)	DUAL CIRCUIT
TM2SB2B-08001	TM2SB3-08005	EL102	L-852K	BIDIREC.	[illegible]REEN[illegible]REEN	L-868B (E)	DUAL CIRCUIT
TM2SB2B-08002	TM2SB3-08006	EL102	COVER [illegible]LATE	N[illegible]A	N[illegible]A	L-868B (E)	DUAL CIRCUIT
TM2SB2B-08003	TM2SB3-08007	EL102	L-852K	BIDIREC.	YELLOW[illegible]YELLOW	L-868B (E)	DUAL CIRCUIT
TM2SB2B-08004	TM2SB3-08008	EL102	COVER [illegible]LATE	N[illegible]A	N[illegible]A	L-868B (E)	DUAL CIRCUIT
TM2SB2B-08005	TM2SB3-08009	EL102	L-852K	BIDIREC.	[illegible]REEN[illegible]REEN	L-868B (E)	DUAL CIRCUIT
TM2SB2B-08007	TM2SB3-08011	EL102	L-852K	BIDIREC.	YELLOW[illegible]YELLOW	L-868B (N)	DUAL CIRCUIT
TM2SB2B-08009	TM2SB3-08013	EL102	L-852K	BIDIREC.	[illegible]REEN[illegible]REEN	L-868B (E)	DUAL CIRCUIT
TM2SB2B-08010	TM2SB3-08014	EL102	COVER [illegible]LATE	N[illegible]A	N[illegible]A	L-868B (E)	DUAL CIRCUIT
TM2SB2B-08011	TM2SB3-08015	EL102	L-852K	BIDIREC.	YELLOW[illegible]YELLOW	L-868B (E)	DUAL CIRCUIT
TM2SB2B-08012	TM2SB3-08016	EL102	COVER [illegible]LATE	N[illegible]A	N[illegible]A	L-868B (E)	DUAL CIRCUIT
TM2SB2B-08013	TM2SB3-08017	EL102	L-852K	BIDIREC.	[illegible]REEN[illegible]REEN	L-868B (E)	DUAL CIRCUIT
TM2SB2B-08014	TM2SB3-08018	EL102	COVER [illegible]LATE	N[illegible]A	N[illegible]A	L-868B (E)	DUAL CIRCUIT
TM2SB2B-08015	TM2SB3-08019	EL102	L-852K	BIDIREC.	YELLOW[illegible]YELLOW	L-868B (N)	DUAL CIRCUIT
TM2SB2B-08017	TM2SB3-08021	EL102	L-852K	BIDIREC.	[illegible]REEN[illegible]REEN	L-868B (N)	DUAL CIRCUIT
TM2SB2B-08019	TM2SB3-08023	EL102	L-852K	BIDIREC.	[illegible]REEN[illegible]REEN	L-868B (N)	DUAL CIRCUIT

NOTES:

1. SEE SHEETS E-001 FOR GENERAL ELECTRICAL NOTES.

SHEET NOTES:

1. FOR (N) BASE CANS ON TWY M6 REFER TO EL900 SERIES. FOR ALL OTHER (N) BASE CANS CONTRACTOR MUST SURVEY (E) BASE CAN LOCATION AND INSTALL (N) BASE CAN AT SAME LOCATION AND ORIENTATION AND ALIGNMENT.
2. ALL LIGHTS MUST BE NEW AND LED U.O.N.
3. FOR ALL LIGHT FIXTURES (NEW AND REINSTALLED), FURNISH AND INSTALL CONNECTORS, SPACER RINGS, FLANGE RING, WITH PAVEMENT DAM, BOLTS, AND WASHERS.
4. FOR NEW LIGHTS, FURNISH AND INSTALL NEW TRANSFORMER SIZE PER MFG. RECOMMENDATIONS. SUPPLY WITH 6.6A PRIMARY/ 6.6A SECONDARY.
5. FOR EXISTING LIGHTS TO BE REMOVED AND REINSTALLED REFER TO SCHEDULE BELOW:

LIGHT TYPE	XFMR TYPE
TWY CTL UNIDIRECTIONAL (LED)	30/45

6. RECORD NUMBER AND DEPTH OF SPACERS.
7. L-868B BASE CAN HEIGHT SHALL BE 22" U.O.N. ON AREA PLANS.
8. L-867B BASE CAN HEIGHT SHALL BE 22" U.O.N. ON AREA PLANS.

ABBREVIATIONS:

BIDIREC. – BIDIRECTIONAL
OMNI – OMNIDIRECTIONAL
UNIDIREC. – UNIDIRECTIONAL
EXT – EXTENSION
(L) – LED (UNLESS OTHERWISE NOTED)
MFG. – MANUFACTURER
(RR) – REMOVE AND REINSTALL
(E) – EXISTING TO BE REUSED
(N) – NEW
N/A – NOT APPLICABLE

COLORADO LICENSED
JORON LEA
52246
2/15/19
PROFESSIONAL ENGINEER

CITY & COUNTY of DENVER

DENVER INTERNATIONAL AIRPORT

LEAN ENGINEERING

RUNWAY 17R-35L COMPLEX PAVEMENT REHABILITATION PACKAGE 1

ISSUE RECORD

NO.	BY	PURPOSE	DATE	CKD
1	LE	50% DESIGN	09/14/18	DL
2	LE	90% DESIGN	10/26/18	DL
3	LE	BID	12/26/18	DL
4	LE	ADDENDUM 2	1/17/19	DL
5	LE	CONSTRUCTION	2/15/19	DL

SCALE AS INDICATED

DATE FEBRUARY 15, 2019

DRAWN BY: KV

CHECKED BY: JA

FAA AIP NO:

WORK BREAKDOWN NO.

DESIGN CONTRACT NO. 201735882

CONST. CONTRACT NO. 201846271

VOLUME NO.

SHEET TITLE

FIXTURE SCHEDULE TWY M2

SHEET NO. EL861

348 OF 396

CADD FILE NO. _201735882-B1EELD-6334

D:\dropbox (lean photometrics)\active projects\1571801a rah den 17r-35l reconstruction\01 drawings\working drawings\Sheets_201735882-B1EELD-6334.dwg Feb 12, 2019 - 5:33pm Kat

FIXTURE ID	REF. DW□	FAA DESI□NATION	FIXTURE TY□E	LENS COLOR	BASE CAN	COMMENTS
TEASB3-08001	EL103	L-852C	UNIDIREC.	□REEN	L-868B (E)	
TEASB3-08002	EL103	L-852C	UNIDIREC.	YELLOW	L-868B (E)	
TEASB3-08003	EL103	L-852C	UNIDIREC.	□REEN	L-868B (E)	
TEASB3-08004	EL103	L-852D	UNIDIREC.	YELLOW	L-868B (E)	
TEASB3-08005	EL103	L-852K	UNIDIREC.	□REEN	L-868B (E)	
TEASB3-08006	EL103	COVER □LATE	N□A	N□A	L-868B (E)	
TEASB3-08007	EL103	L-852K	UNIDIREC.	YELLOW	L-868B (E)	
TEASB3-08008	EL103	COVER □LATE	N□A	N□A	L-868B (E)	
TEASB3-08009	EL103	L-852K	UNIDIREC.	□REEN	L-868B (E)	
TEASB3-08010	EL103	COVER □LATE	N□A	N□A	L-868B (E)	
TEASB3-08011	EL103	L-852K	UNIDIREC.	YELLOW	L-868B (E)	
TEASB3-08012	EL103	COVER □LATE	N□A	N□A	L-868B (E)	
TEASB3-08013	EL103	L-852K	UNIDIREC.	□REEN	L-868B (E)	
TEASB3-08014	EL103	COVER □LATE	N□A	N□A	L-868B (E)	
TEASB3-08015	EL103	L-852K	UNIDIREC.	YELLOW	L-868B (E)	
TEASB3-08016	EL103	COVER □LATE	N□A	N□A	L-868B (E)	
TEASB3-08017	EL103	L-852K	UNIDIREC.	□REEN	L-868B (E)	
TEASB3-08018	EL103	COVER □LATE	N□A	N□A	L-868B (E)	
TEASB3-08019	EL103	L-852K	UNIDIREC.	YELLOW	L-868B (E)	
TEASB3-08020	EL103	COVER □LATE	N□A	N□A	L-868B (E)	
TEASB3-08021	EL103	L-852K	UNIDIREC.	□REEN	L-868B (E)	
TEASB3-08022	EL103	COVER □LATE	N□A	N□A	L-868B (E)	
TEASB3-08023	EL103	L-852D	UNIDIREC.	□REEN	L-868B (E)	
TEASB3-08024	EL103	L-852K	UNIDIREC.	□REEN	L-868B (N)	
TEASB3-08026	EL103	L-852K	UNIDIREC.	YELLOW	L-868B (N)	
TEASB3-08028	EL103	L-852K	UNIDIREC.	□REEN	L-868B (N)	
TEASB3-08029	EL103	COVER □LATE	N□A	N□A	L-868B (E)	
TEASB3-08030	EL103	L-852K	UNIDIREC.	YELLOW	L-868B (E)	
TEASB3-08031	EL103	COVER □LATE	N□A	N□A	L-868B (E)	
TEASB3-08032	EL103	L-852K	UNIDIREC.	□REEN	L-868B (E)	
TEASB3-08033	EL103	COVER □LATE	N□A	N□A	L-868B (E)	
TEASB3-08034	EL103	L-852K	UNIDIREC.	YELLOW	L-868B (E)	
TEASB3-08035	EL103	COVER □LATE	N□A	N□A	L-868B (E)	
TEASB3-08036	EL103	L-852K	UNIDIREC.	□REEN	L-868B (E)	
TEASB3-08037	EL103	COVER □LATE	N□A	N□A	L-868B (E)	
TEASB3-08038	EL103	L-852K	UNIDIREC.	YELLOW	L-868B (E)	
TEASB3-08039	EL103	COVER □LATE	N□A	N□A	L-868B (E)	
TEASB3-08040	EL103	L-852K	UNIDIREC.	□REEN	L-868B (E)	
TEASB3-08041	EL103	COVER □LATE	N□A	N□A	L-868B (E)	
TEASB3-08042	EL103	L-852D	UNIDIREC.	□REEN	L-868B (E)	
T□4HC1-07201	EL103	L-852C	UNIDIREC.	□REEN	L-868B (E)	
T□4HC1-07200	EL103	L-852C	UNIDIREC.	YELLOW	L-868B (E)	
T□4HC1-07199	EL115	L-852C	UNIDIREC.	□REEN	L-868B (E)	
T□4HC1-07198	EL115	L-852C	UNIDIREC.	YELLOW	L-868B (E)	
T□4HC1-07197	EL115	L-852C	UNIDIREC.	□REEN	L-868B (E)	

NOTES:

1. SEE SHEETS E-001 FOR GENERAL ELECTRICAL NOTES.

SHEET NOTES:

1. FOR (N) BASE CANS ON TWY M6 REFER TO EL900 SERIES. FOR ALL OTHER (N) BASE CANS CONTRACTOR MUST SURVEY (E) BASE CAN LOCATION AND INSTALL (N) BASE CAN AT SAME LOCATION AND ORIENTATION AND ALIGNMENT.
2. ALL LIGHTS MUST BE NEW AND LED U.O.N.
3. FOR ALL LIGHT FIXTURES (NEW AND REINSTALLED), FURNISH AND INSTALL CONNECTORS, SPACER RINGS, FLANGE RING, WITH PAVEMENT DAM, BOLTS, AND WASHERS.
4. FOR NEW LIGHTS, FURNISH AND INSTALL NEW TRANSFORMER SIZE PER MFG. RECOMMENDATIONS. SUPPLY WITH 6.6A PRIMARY/ 6.6A SECONDARY.
5. FOR EXISTING LIGHTS TO BE REMOVED AND REINSTALLED REFER TO SCHEDULE BELOW:

LIGHT TYPE	XFMR TYPE
TWY CTL UNIDIRECTIONAL (LED)	30/45

6. RECORD NUMBER AND DEPTH OF SPACERS.
7. L-868B BASE CAN HEIGHT SHALL BE 22" U.O.N. ON AREA PLANS.
8. L-867B BASE CAN HEIGHT SHALL BE 22" U.O.N. ON AREA PLANS.

ABBREVIATIONS:

BIDIREC. – BIDIRECTIONAL
OMNI – OMNIDIRECTIONAL
UNIDIREC. – UNIDIRECTIONAL
EXT – EXTENSION
(L) – LED (UNLESS OTHERWISE NOTED)
MFG. – MANUFACTURER
(RR) – REMOVE AND REINSTALL
(E) – EXISTING TO BE REUSED
(N) – NEW
N/A – NOT APPLICABLE

COLORADO LICENSED
GORON LEA
52246
2/15/19
PROFESSIONAL ENGINEER

CITY & COUNTY of DENVER

DENVER INTERNATIONAL AIRPORT

LEAN ENGINEERING

RUNWAY 17R-35L COMPLEX PAVEMENT REHABILITATION PACKAGE 1

ISSUE RECORD

NO.	BY	PURPOSE	DATE	CKD
1	LE	50% DESIGN	09/14/18	DL
2	LE	90% DESIGN	10/26/18	DL
3	LE	BID	12/26/18	DL
4	LE	ADDENDUM 2	1/17/19	DL
5	LE	CONSTRUCTION	2/15/19	DL

SCALE: AS INDICATED
DATE: FEBRUARY 15, 2019
DRAWN BY: KV
CHECKED BY: JA
FAA AIP NO:
WORK BREAKDOWN NO.
DESIGN CONTRACT NO. 201735882
CONST. CONTRACT NO. 201846271
VOLUME NO.
SHEET TITLE: FIXTURE SCHEDULE TWY EA
SHEET NO. EL862

CADD FILE NO. _201735882-B1EELD-6334

D:\dropbox (lean photometrics)\active projects\157180 ia rah den 17r-35l reconstruction\01 drawings\working drawings\sheets_20173588z-B1EELD-6334.dwg Feb 12, 2019 - 5:33pm Kat

FIXTURE ID	REF. DWG	FAA DESIGNATION	FIXTURE TYPE	LENS COLOR	BASE CAN	COMMENTS
TM5HC-08044	EL105	L-852C	UNIDIREC.	YELLOW	L-868B (E)	
TM5HC-08045	EL105	L-852D	UNIDIREC.	GREEN	L-868B (E)	
TM5HC-08046	EL105	L-852K	UNIDIREC.	GREEN	L-868B (E)	
TM5HC-08047	EL105	COVER PLATE	N/A	N/A	L-868B (E)	
TM5HC-08048	EL105	L-852K	UNIDIREC.	GREEN	L-868B (E)	
TM5HC-08049	EL105	COVER PLATE	N/A	N/A	L-868B (E)	
TM5HC-08050	EL105	L-852K	UNIDIREC.	GREEN	L-868B (E)	
TM5HC-08051	EL105	COVER PLATE	N/A	N/A	L-868B (E)	
TM5HC-08052	EL105	L-852K	UNIDIREC.	GREEN	L-868B (E)	
TM5HC-08053	EL105	COVER PLATE	N/A	N/A	L-868B (E)	
TM5HC-08054	EL105	L-852K	UNIDIREC.	GREEN	L-868B (E)	
TM5HC-08055	EL105	COVER PLATE	N/A	N/A	L-868B (E)	
TM5HC-08056	EL105	L-852K	UNIDIREC.	GREEN	L-868B (E)	
TM5HC-08057	EL105	COVER PLATE	N/A	N/A	L-868B (E)	
TM5HC-08058	EL105	L-852K	UNIDIREC.	GREEN	L-868B (E)	
TM5HC-08059	EL105	COVER PLATE	N/A	N/A	L-868B (E)	
TM5HC-08060	EL105	L-852K	UNIDIREC.	GREEN	L-868B (E)	
TM5HC-08061	EL105	COVER PLATE	N/A	N/A	L-868B (E)	
TM5HC-08062	EL105	L-852K	UNIDIREC.	GREEN	L-868B (E)	
TM5HC-08063	EL105	COVER PLATE	N/A	N/A	L-868B (E)	
TM5HC-08064	EL105	L-852K	UNIDIREC.	GREEN	L-868B (E)	
TM5HC-08065	EL105	COVER PLATE	N/A	N/A	L-868B (E)	
TM5HC-08066	EL105	L-852K	UNIDIREC.	GREEN	L-868B (E)	
TM5HC-08067	EL105	COVER PLATE	N/A	N/A	L-868B (E)	
TM5HC-08068	EL105	L-852K	UNIDIREC.	GREEN	L-868B (E)	
TM5HC-08069	EL105	COVER PLATE	N/A	N/A	L-868B (E)	
TM5HC-08070	EL105	L-852K	UNIDIREC.	GREEN	L-868B (E)	
TM5HC-08071	EL105	COVER PLATE	N/A	N/A	L-868B (E)	
TM5HC-08072	EL105	L-852K	UNIDIREC.	YELLOW	L-868B (E)	
TM5HC-08073	EL105	COVER PLATE	N/A	N/A	L-868B (E)	
TM5HC-08074	EL105	L-852K	UNIDIREC.	GREEN	L-868B (E)	
TM5HC-08075	EL105	COVER PLATE	N/A	N/A	L-868B (E)	
TM5HC-08076	EL105	L-852C	UNIDIREC.	YELLOW	L-868B (N)	
TM5HC-08077	EL105	L-852C	UNIDIREC.	GREEN	L-868B (N)	
TM5HC-08078	EL105	L-852C	UNIDIREC.	YELLOW	L-868B (N)	
TM5HC-08079	EL105	L-852C	UNIDIREC.	GREEN	L-868B (N)	
TM5HC-08080	EL105	L-852D	UNIDIREC.	YELLOW	L-868B (N)	
TM5HC-08081	EL105	L-852D	UNIDIREC.	GREEN	L-868B (N)	
TM5HC-08082	EL105	L-852D	UNIDIREC.	YELLOW	L-868B (N)	
TM5HC-08083	EL105	L-852D	UNIDIREC.	GREEN	L-868B (N)	
TM5HC-08084	EL105	L-852D	UNIDIREC.	YELLOW	L-868B (N)	
TM5HC-08085	EL105	L-852D	UNIDIREC.	GREEN	L-868B (N)	
TM5HC-08086	EL105	L-852D	UNIDIREC.	YELLOW	L-868B (N)	
TM5HC-08087	EL105	L-852D	UNIDIREC.	GREEN	L-868B (N)	
TM5HC-08088	EL105	L-852D	UNIDIREC.	YELLOW	L-868B (N)	
TM5HC-08089	EL105	L-852D	UNIDIREC.	GREEN	L-868B (N)	
TM5HC-08090	EL105	L-852D	UNIDIREC.	YELLOW	L-868B (E)	
TM5HC-08091	EL105	L-852D	UNIDIREC.	GREEN	L-868B (E)	
TM5HC-08092	EL105	L-852D	UNIDIREC.	YELLOW	L-868B (E)	
TM5HC-08093	EL106	L-852D	UNIDIREC.	GREEN	L-868B (E)	
TM5HC-08094	EL106	L-852D	UNIDIREC.	YELLOW	L-868B (E)	
TM5HC-08095	EL106	L-852D	UNIDIREC.	GREEN	L-868B (E)	
TM5HC-08096	EL106	L-852D	UNIDIREC.	YELLOW	L-868B (E)	
TM5HC-08097	EL106	L-852D	UNIDIREC.	GREEN	L-868B (E)	
TM5HC-08098	EL106	L-852D	UNIDIREC.	YELLOW	L-868B (E)	
TM5HC-08099	EL106	L-852D	UNIDIREC.	GREEN	L-868B (E)	
TM5HC-08100	EL106	L-852D	UNIDIREC.	YELLOW	L-868B (E)	
TM5HC-08101	EL106	L-852D	UNIDIREC.	GREEN	L-868B (E)	
TM5HC-08102	EL106	L-852D	UNIDIREC.	YELLOW	L-868B (E)	
TM5HC-08103	EL106	L-852D	UNIDIREC.	GREEN	L-868B (E)	
TM5HC-08104	EL106	L-852D	UNIDIREC.	YELLOW	L-868B (E)	
TM5HC-08105	EL106	L-852D	UNIDIREC.	GREEN	L-868B (E)	
TM5HC-08106	EL106	L-852D	UNIDIREC.	YELLOW	L-868B (E)	
TM5HC-08107	EL106	L-852D	UNIDIREC.	GREEN	L-868B (E)	
TM5HC-08108	EL106	L-852D	UNIDIREC.	YELLOW	L-868B (E)	
TM5HC-08109	EL106	L-852C	UNIDIREC.	GREEN	L-868B (E)	
TM5HC-08110	EL106	L-852C	UNIDIREC.	YELLOW	L-868B (E)	
TM5HC-08111	EL106	L-852C	UNIDIREC.	GREEN	L-868B (E)	
TM5HC-08112	EL106	L-852C	UNIDIREC.	GREEN	L-868B (E)	
TM5HC-08135	EL106	L-852C	UNIDIREC.	GREEN	L-868B (E)	
TM5HC-08136	EL106	L-852C	UNIDIREC.	YELLOW	L-868B (E)	
TM5HC-08137	EL106	L-852D	UNIDIREC.	GREEN	L-868B (E)	
TM5HC-08138	EL106	L-852K	UNIDIREC.	GREEN	L-868B (E)	
TM5HC-08139	EL106	COVER PLATE	N/A	N/A	L-868B (E)	
TM5HC-08140	EL106	L-852K	UNIDIREC.	GREEN	L-868B (E)	
TM5HC-08141	EL106	COVER PLATE	N/A	N/A	L-868B (E)	
TM5HC-08142	EL106	L-852K	UNIDIREC.	GREEN	L-868B (E)	
TM5HC-08143	EL106	COVER PLATE	N/A	N/A	L-868B (E)	

MATCH LINE SEE SHEET RIGHT

FIXTURE ID	REF. DWG	FAA DESIGNATION	FIXTURE TYPE	LENS COLOR	BASE CAN	COMMENTS

MATCH LINE SEE SHEET LEFT

TM5HC-08144	EL106	L-852K	UNIDIREC.	GREEN	L-868B (E)	
TM5HC-08145	EL106	COVER PLATE	N/A	N/A	L-868B (E)	
TM5HC-08146	EL106	L-852K	UNIDIREC.	GREEN	L-868B (E)	
TM5HC-08147	EL106	COVER PLATE	N/A	N/A	L-868B (E)	
TM5HC-08148	EL106	L-852K	UNIDIREC.	GREEN	L-868B (E)	
TM5HC-08149	EL106	COVER PLATE	N/A	N/A	L-868B (E)	
TM5HC-08150	EL106	L-852K	UNIDIREC.	GREEN	L-868B (E)	
TM5HC-08151	EL106	COVER PLATE	N/A	N/A	L-868B (E)	
TM5HC-08152	EL106	L-852K	UNIDIREC.	GREEN	L-868B (E)	
TM5HC-08153	EL106	COVER PLATE	N/A	N/A	L-868B (E)	
TM5HC-08154	EL106	L-852K	UNIDIREC.	GREEN	L-868B (E)	
TM5HC-08155	EL106	COVER PLATE	N/A	N/A	L-868B (E)	
TM5HC-08156	EL106	L-852K	UNIDIREC.	GREEN	L-868B (E)	
TM5HC-08157	EL106	COVER PLATE	N/A	N/A	L-868B (E)	
TM5HC-08158	EL106	L-852K	UNIDIREC.	GREEN	L-868B (E)	
TM5HC-08159	EL106	COVER PLATE	N/A	N/A	L-868B (E)	
TM5HC-08160	EL106	L-852K	UNIDIREC.	GREEN	L-868B (E)	
TM5HC-08161	EL106	COVER PLATE	N/A	N/A	L-868B (E)	
TM5HC-08162	EL106	L-852K	UNIDIREC.	GREEN	L-868B (E)	
TM5HC-08163	EL106	COVER PLATE	N/A	N/A	L-868B (E)	
TM5HC-08164	EL106	L-852K	UNIDIREC.	GREEN	L-868B (E)	
TM5HC-08165	EL106	COVER PLATE	N/A	N/A	L-868B (E)	
TM5HC-08166	EL106	L-852K	UNIDIREC.	GREEN	L-868B (E)	
TM5HC-08167	EL106	COVER PLATE	N/A	N/A	L-868B (E)	
TM5HC-08168	EL106	L-852C	UNIDIREC.	YELLOW	L-868B (E)	
TM5HC-08169	EL106	L-852C	UNIDIREC.	GREEN	L-868B (E)	
TM5HC-08170	EL106	L-852C	UNIDIREC.	YELLOW	L-868B (E)	
TM5HC-08171	EL106	L-852C	UNIDIREC.	GREEN	L-868B (E)	
TM5HC-08172	EL106	L-852D	UNIDIREC.	YELLOW	L-868B (E)	
TM5HC-08173	EL106	L-852D	UNIDIREC.	GREEN	L-868B (E)	
TM5HC-08174	EL107	L-852D	UNIDIREC.	YELLOW	L-868B (E)	
TM5HC-08175	EL107	L-852D	UNIDIREC.	GREEN	L-868B (E)	
TM5HC-08176	EL107	L-852D	UNIDIREC.	YELLOW	L-868B (E)	
TM5HC-08177	EL107	L-852D	UNIDIREC.	GREEN	L-868B (E)	
TM5HC-08178	EL107	L-852D	UNIDIREC.	YELLOW	L-868B (E)	
TM5HC-08179	EL107	L-852D	UNIDIREC.	GREEN	L-868B (E)	
TM5HC-08180	EL107	L-852D	UNIDIREC.	YELLOW	L-868B (N)	
TM5HC-08181	EL107	L-852D	UNIDIREC.	GREEN	L-868B (E)	
TM5HC-08182	EL107	L-852D	UNIDIREC.	YELLOW	L-868B (E)	
TM5HC-08183	EL107	L-852D	UNIDIREC.	GREEN	L-868B (E)	
TM5HC-08184	EL107	L-852D	UNIDIREC.	YELLOW	L-868B (E)	
TM5HC-08185	EL107	L-852D	UNIDIREC.	GREEN	L-868B (E)	
TM5HC-08186	EL107	L-852D	UNIDIREC.	YELLOW	L-868B (E)	
TM5HC-08187	EL107	L-852D	UNIDIREC.	GREEN	L-868B (E)	
TM5HC-08188	EL107	L-852D	UNIDIREC.	YELLOW	L-868B (E)	
TM5HC-08189	EL107	L-852D	UNIDIREC.	GREEN	L-868B (E)	
TM5HC-08190	EL107	L-852D	UNIDIREC.	YELLOW	L-868B (E)	
TM5HC-08191	EL107	L-852D	UNIDIREC.	GREEN	L-868B (E)	
TM5HC-08192	EL107	L-852D	UNIDIREC.	YELLOW	L-868B (E)	
TM5HC-08193	EL107	L-852D	UNIDIREC.	GREEN	L-868B (E)	
TM5HC-08194	EL107	L-852D	UNIDIREC.	YELLOW	L-868B (E)	
TM5HC-08195	EL108	L-852D	UNIDIREC.	GREEN	L-868B (E)	
TM5HC-08196	EL108	L-852D	UNIDIREC.	YELLOW	L-868B (E)	
TM5HC-08197	EL108	L-852D	UNIDIREC.	GREEN	L-868B (E)	
TM5HC-08198	EL108	L-852D	UNIDIREC.	YELLOW	L-868B (E)	
TM5HC-08199	EL108	L-852D	UNIDIREC.	GREEN	L-868B (E)	
TM5HC-08200	EL108	L-852D	UNIDIREC.	YELLOW	L-868B (E)	
TM5HC-08201	EL108	L-852C	UNIDIREC.	GREEN	L-868B (E)	
TM5HC-08202	EL108	L-852C	UNIDIREC.	YELLOW	L-868B (E)	
TM5HC-08203	EL108	L-852C	UNIDIREC.	GREEN	L-868B (E)	
TM5HC-08204	EL108	L-852C	UNIDIREC.	GREEN	L-868B (E)	

NOTES:

1. SEE SHEETS E-001 FOR GENERAL ELECTRICAL NOTES.

SHEET NOTES:

1. FOR (N) BASE CANS ON TWY M6 REFER TO EL900 SERIES. FOR ALL OTHER (N) BASE CANS CONTRACTOR MUST SURVEY (E) BASE CAN LOCATION AND INSTALL (N) BASE CAN AT SAME LOCATION AND ORIENTATION AND ALIGNMENT.
2. ALL LIGHTS MUST BE NEW AND LED U.O.N.
3. FOR ALL LIGHT FIXTURES (NEW AND REINSTALLED), FURNISH AND INSTALL CONNECTORS, SPACER RINGS, FLANGE RING, WITH PAVEMENT DAM, BOLTS, AND WASHERS.
4. FOR NEW LIGHTS, FURNISH AND INSTALL NEW TRANSFORMER SIZE PER MFG. RECOMMENDATIONS. SUPPLY WITH 6.6A PRIMARY/ 6.6A SECONDARY.
5. FOR EXISTING LIGHTS TO BE REMOVED AND REINSTALLED REFER TO SCHEDULE BELOW:

LIGHT TYPE	XFMR TYPE
TWY CTL UNIDIRECTIONAL (LED)	30/45

6. RECORD NUMBER AND DEPTH OF SPACERS.
7. L-868B BASE CAN HEIGHT SHALL BE 22" U.O.N. ON AREA PLANS.
8. L-867B BASE CAN HEIGHT SHALL BE 22" U.O.N. ON AREA PLANS.

ABBREVIATIONS:

BIDIREC. – BIDIRECTIONAL
OMNI – OMNIDIRECTIONAL
UNIDIREC. – UNIDIRECTIONAL
EXT – EXTENSION
(L) – LED (UNLESS OTHERWISE NOTED)
MFG. – MANUFACTURER
(RR) – REMOVE AND REINSTALL
(E) – EXISTING TO BE REUSED
(N) – NEW
N/A – NOT APPLICABLE

COLORADO LICENSED
DIXON LEA
52246
2/15/19
PROFESSIONAL ENGINEER

CITY & COUNTY of DENVER

DENVER INTERNATIONAL AIRPORT

LEAN ENGINEERING

RUNWAY 17R-35L COMPLEX PAVEMENT REHABILITATION PACKAGE 1

ISSUE RECORD

NO.	BY	PURPOSE	DATE	CKD
1	LE	50% DESIGN	09/14/18	DL
2	LE	90% DESIGN	10/26/18	DL
3	LE	BID	12/26/18	DL
4	LE	CONSTRUCTION	2/15/19	DL

SCALE: AS INDICATED
DATE: FEBRUARY 15, 2019
DRAWN BY: KV
CHECKED BY: JA
FAA AIP NO:
WORK BREAKDOWN NO.
DESIGN CONTRACT NO. 201735882
CONST. CONTRACT NO. 201846271
VOLUME NO.
SHEET TITLE: FIXTURE SCHEDULE CIRCUIT TM5HC
SHEET NO. EL863

CADD FILE NO. _201735882-B1EELD-6334

D:\dropbox (lean photometrics)\active projects\1157180ia rah den 17r-35l reconstruction\01 drawings\working drawings\Sheets_201735882-B1EELD-6334.dwg Feb 12, 2019 - 5:33pm Kat

FIXTURE ID	REF. DWG	FAA DESIGNATION	FIXTURE TYPE	LENS COLOR	BASE CAN	COMMENTS
TM6HC-08001	EL108	COVER PLATE	N/A	N/A	L-868B (E)	
TM6HC-08002	EL108	COVER PLATE	N/A	N/A	L-868B (E)	
TM6HC-08003	EL108	COVER PLATE	N/A	N/A	L-868B (E)	
TM6HC-08004	EL108	COVER PLATE	N/A	N/A	L-868B (E)	
TM6HC-08005	EL108	COVER PLATE	N/A	N/A	L-868B (E)	
TM6HC-08006	EL108	COVER PLATE	N/A	N/A	L-868B (E)	
TM6HC-08007	EL108	COVER PLATE	N/A	N/A	L-868B (E)	
TM6HC-08008	EL108	COVER PLATE	N/A	N/A	L-868B (E)	
TM6HC-08009	EL108	COVER PLATE	N/A	N/A	L-868B (E)	
TM6HC-08010	EL108	COVER PLATE	N/A	N/A	L-868B (E)	
TM6HC-08011	EL108	COVER PLATE	N/A	N/A	L-868B (E)	
TM6HC-08012	EL108	L-852C	UNIDIREC.	GREEN	L-868B (N)	
TM6HC-08013	EL108	L-852C	UNIDIREC.	YELLOW	L-868B (N)	
TM6HC-08014	EL108	L-852C	UNIDIREC.	GREEN	L-868B (N)	
TM6HC-08015	EL108	L-852C	UNIDIREC.	YELLOW	L-868B (N)	
TM6HC-08016	EL108	L-852C	UNIDIREC.	GREEN	L-868B (N)	
TM6HC-08017	EL108	L-852D	UNIDIREC.	YELLOW	L-868B (N)	
TM6HC-08018	EL108	L-852D	UNIDIREC.	GREEN	L-868B (N)	
TM6HC-08019	EL109	L-852D	UNIDIREC.	YELLOW	L-868B (N)	
TM6HC-08020	EL109	L-852D	UNIDIREC.	GREEN	L-868B (N)	
TM6HC-08021	EL109	L-852D	UNIDIREC.	YELLOW	L-868B (N)	
TM6HC-08022	EL109	L-852D	UNIDIREC.	GREEN	L-868B (N)	
TM6HC-08023	EL109	L-852D	UNIDIREC.	YELLOW	L-868B (N)	
TM6HC-08024	EL109	L-852D	UNIDIREC.	GREEN	L-868B (N)	
TM6HC-08025	EL109	L-852D	UNIDIREC.	YELLOW	L-868B (N)	
TM6HC-08026	EL109	L-852D	UNIDIREC.	GREEN	L-868B (N)	
TM6HC-08027	EL109	L-852D	UNIDIREC.	YELLOW	L-868B (N)	
TM6HC-08028	EL109	L-852D	UNIDIREC.	GREEN	L-868B (N)	
TM6HC-08029	EL109	L-852D	UNIDIREC.	YELLOW	L-868B (N)	
TM6HC-08030	EL109	L-852D	UNIDIREC.	GREEN	L-868B (N)	
TM6HC-08031	EL109	L-852D	UNIDIREC.	YELLOW	L-868B (N)	
TM6HC-08032	EL109	L-852D	UNIDIREC.	GREEN	L-868B (N)	
TM6HC-08033	EL109	L-852C	UNIDIREC.	YELLOW	L-868B (N)	
TM6HC-08034	EL109	L-852C	UNIDIREC.	GREEN	L-868B (N)	
TM6HC-08035	EL109	L-852C	UNIDIREC.	YELLOW	L-868B (N)	
TM6HC-08036	EL109	L-852C	UNIDIREC.	YELLOW	L-868B (N)	
TM6HC-08037	EL109	L-852K	UNIDIREC.	GREEN	L-868K (N)	
TM6HC-08038	EL109	L-852K	UNIDIREC.	YELLOW	L-868K (N)	
TM6HC-08039	EL109	L-852K	UNIDIREC.	GREEN	L-868K (N)	
TM6HC-08044	EL109	COVER PLATE	N/A	N/A	L-868B (E)	
TM6HC-08045	EL109	L-852K	UNIDIREC.	GREEN	L-868B (E)	
TM6HC-08046	EL109	COVER PLATE	N/A	N/A	L-868B (E)	
TM6HC-08047	EL109	L-852K	UNIDIREC.	GREEN	L-868B (E)	
TM6HC-08048	EL109	COVER PLATE	N/A	N/A	L-868B (E)	
TM6HC-08049	EL109	L-852K	UNIDIREC.	GREEN	L-868B (E)	
TM6HC-08050	EL109	COVER PLATE	N/A	N/A	L-868B (E)	
TM6HC-08051	EL109	L-852K	UNIDIREC.	GREEN	L-868B (E)	
TM6HC-08052	EL109	COVER PLATE	N/A	N/A	L-868B (E)	
TM6HC-08053	EL109	L-852K	UNIDIREC.	GREEN	L-868B (E)	
TM6HC-08054	EL109	COVER PLATE	N/A	N/A	L-868B (E)	
TM6HC-08055	EL109	L-852K	UNIDIREC.	GREEN	L-868B (E)	
TM6HC-08056	EL109	COVER PLATE	N/A	N/A	L-868B (E)	
TM6HC-08057	EL109	L-852K	UNIDIREC.	GREEN	L-868B (E)	
TM6HC-08058	EL109	COVER PLATE	N/A	N/A	L-868B (E)	
TM6HC-08059	EL109	L-852K	UNIDIREC.	GREEN	L-868B (E)	
TM6HC-08060	EL109	COVER PLATE	N/A	N/A	L-868B (E)	
TM6HC-08061	EL109	L-852K	UNIDIREC.	GREEN	L-868B (E)	
TM6HC-08062	EL109	COVER PLATE	N/A	N/A	L-868B (E)	
TM6HC-08063	EL109	L-852K	UNIDIREC.	GREEN	L-868B (E)	
TM6HC-08064	EL109	COVER PLATE	N/A	N/A	L-868B (E)	
TM6HC-08065	EL109	L-852K	UNIDIREC.	GREEN	L-868B (E)	
TM6HC-08066	EL109	COVER PLATE	N/A	N/A	L-868B (E)	
TM6HC-08067	EL109	L-852K	UNIDIREC.	GREEN	L-868B (E)	
TM6HC-08068	EL109	L-852C	UNIDIREC.	GREEN	L-868B (N)	
TM6HC-08069	EL109	L-852C	UNIDIREC.	YELLOW	L-868B (N)	TWY M6

NOTES:

1. SEE SHEETS E-001 FOR GENERAL ELECTRICAL NOTES.

SHEET NOTES:

1. FOR (N) BASE CANS ON TWY M6 REFER TO EL900 SERIES. FOR ALL OTHER (N) BASE CANS CONTRACTOR MUST SURVEY (E) BASE CAN LOCATION AND INSTALL (N) BASE CAN AT SAME LOCATION AND ORIENTATION AND ALIGNMENT.
2. ALL LIGHTS MUST BE NEW AND LED U.O.N.
3. FOR ALL LIGHT FIXTURES (NEW AND REINSTALLED), FURNISH AND INSTALL CONNECTORS, SPACER RINGS, FLANGE RING, WITH PAVEMENT DAM, BOLTS, AND WASHERS.
4. FOR NEW LIGHTS, FURNISH AND INSTALL NEW TRANSFORMER SIZE PER MFG. RECOMMENDATIONS. SUPPLY WITH 6.6A PRIMARY/ 6.6A SECONDARY.
5. FOR EXISTING LIGHTS TO BE REMOVED AND REINSTALLED REFER TO SCHEDULE BELOW:

LIGHT TYPE	XFMR TYPE
TWY CTL UNIDIRECTIONAL (LED)	30/45

6. RECORD NUMBER AND DEPTH OF SPACERS.
7. L-868B BASE CAN HEIGHT SHALL BE 22" U.O.N. ON AREA PLANS.
8. L-867B BASE CAN HEIGHT SHALL BE 22" U.O.N. ON AREA PLANS.

ABBREVIATIONS:

BIDIREC. – BIDIRECTIONAL
OMNI – OMNIDIRECTIONAL
UNIDIREC. – UNIDIRECTIONAL
EXT – EXTENSION
(L) – LED (UNLESS OTHERWISE NOTED)
MFG. – MANUFACTURER
(RR) – REMOVE AND REINSTALL
(E) – EXISTING TO BE REUSED
(N) – NEW
N/A – NOT APPLICABLE

COLORADO LICENSED
GORON LEA
52246
2/15/19
PROFESSIONAL ENGINEER

CITY & COUNTY of DENVER

DENVER INTERNATIONAL AIRPORT

LEAN ENGINEERING

RUNWAY 17R-35L COMPLEX PAVEMENT REHABILITATION PACKAGE 1

ISSUE RECORD

NO.	BY	PURPOSE	DATE	CKD
1	LE	50% DESIGN	09/14/18	DL
2	LE	90% DESIGN	10/26/18	DL
3	LE	BID	12/26/18	DL
4	LE	CONSTRUCTION	2/15/19	DL

SCALE: AS INDICATED
DATE: FEBRUARY 15, 2019
DRAWN BY: KV
CHECKED BY: JA
FAA AIP NO:
WORK BREAKDOWN NO.
DESIGN CONTRACT NO. 201735882
CONST. CONTRACT NO. 201846271
VOLUME NO.
SHEET TITLE: FIXTURE SCHEDULE CIRCUIT TM6HC
SHEET NO. EL864
351 OF 396
CADD FILE NO. _201735882-B1EELD-6334

D:\dropbox (lean photometrics)\active projects\1571801a rah den 17r-35l reconstruction\01 drawings\working drawings\sheets_201735882-B1EELD-6334.dwg Feb 12, 2019 - 5:33pm Kat

FIXTURE ID	REF. DWG	FAA DESIGNATION	FIXTURE TYPE	LENS COLOR	BASE CAN	COMMENTS
TM7HC-08001	EL109	L-852C	UNIDIREC.	GREEN	L-868B (E)	
TM7HC-08002	EL109	L-852C	UNIDIREC.	GREEN	L-868B (E)	
TM7HC-08003	EL109	L-852C	UNIDIREC.	YELLOW	L-868B (E)	
TM7HC-08004	EL109	L-852C	UNIDIREC.	GREEN	L-868B (E)	
TM7HC-08005	EL109	L-852D	UNIDIREC.	YELLOW	L-868B (E)	
TM7HC-08006	EL109	L-852D	UNIDIREC.	GREEN	L-868B (E)	
TM7HC-08007	EL109	L-852D	UNIDIREC.	YELLOW	L-868B (E)	
TM7HC-08008	EL109	L-852D	UNIDIREC.	GREEN	L-868B (E)	
TM7HC-08009	EL109	L-852D	UNIDIREC.	YELLOW	L-868B (E)	
TM7HC-08010	EL109	L-852D	UNIDIREC.	GREEN	L-868B (E)	
TM7HC-08011	EL110	L-852D	UNIDIREC.	YELLOW	L-868B (E)	
TM7HC-08012	EL110	L-852D	UNIDIREC.	GREEN	L-868B (E)	
TM7HC-08013	EL110	L-852D	UNIDIREC.	YELLOW	L-868B (E)	
TM7HC-08014	EL110	L-852D	UNIDIREC.	GREEN	L-868B (E)	
TM7HC-08015	EL110	L-852D	UNIDIREC.	YELLOW	L-868B (E)	
TM7HC-08016	EL110	L-852D	UNIDIREC.	GREEN	L-868B (E)	
TM7HC-08017	EL110	L-852D	UNIDIREC.	YELLOW	L-868B (N)	
TM7HC-08018	EL110	L-852D	UNIDIREC.	GREEN	L-868B (N)	
TM7HC-08019	EL110	L-852D	UNIDIREC.	YELLOW	L-868B (N)	
TM7HC-08020	EL110	L-852D	UNIDIREC.	GREEN	L-868B (N)	
TM7HC-08021	EL110	L-852D	UNIDIREC.	YELLOW	L-868B (N)	
TM7HC-08022	EL110	L-852D	UNIDIREC.	GREEN	L-868B (N)	
TM7HC-08023	EL110	L-852D	UNIDIREC.	YELLOW	L-868B (N)	
TM7HC-08024	EL110	L-852D	UNIDIREC.	GREEN	L-868B (E)	
TM7HC-08025	EL110	L-852D	UNIDIREC.	YELLOW	L-868B (E)	
TM7HC-08026	EL110	L-852D	UNIDIREC.	GREEN	L-868B (E)	
TM7HC-08027	EL110	L-852D	UNIDIREC.	YELLOW	L-868B (E)	
TM7HC-08028	EL110	L-852D	UNIDIREC.	GREEN	L-868B (E)	
TM7HC-08029	EL110	L-852D	UNIDIREC.	YELLOW	L-868B (E)	
TM7HC-08030	EL110	L-852D	UNIDIREC.	GREEN	L-868B (E)	
TM7HC-08031	EL111	L-852D	UNIDIREC.	YELLOW	L-868B (E)	
TM7HC-08032	EL111	L-852D	UNIDIREC.	GREEN	L-868B (E)	
TM7HC-08033	EL111	L-852C	UNIDIREC.	YELLOW	L-868B (E)	
TM7HC-08034	EL111	L-852C	UNIDIREC.	GREEN	L-868B (E)	
TM7HC-08035	EL111	L-852C	UNIDIREC.	YELLOW	L-868B (E)	
TM7HC-08036	EL111	L-852C	UNIDIREC.	GREEN	L-868B (E)	
TM7HC-08037	EL111	COVER PLATE	N/A	N/A	L-868B (E)	
TM7HC-08038	EL111	L-852K	UNIDIREC.	GREEN	L-868B (E)	
TM7HC-08039	EL111	COVER PLATE	N/A	N/A	L-868B (E)	
TM7HC-08040	EL111	L-852K	UNIDIREC.	YELLOW	L-868B (E)	
TM7HC-08041	EL111	COVER PLATE	N/A	N/A	L-868B (E)	
TM7HC-08042	EL111	L-852K	UNIDIREC.	GREEN	L-868B (E)	
TM7HC-08043	EL111	COVER PLATE	N/A	N/A	L-868B (E)	
TM7HC-08044	EL111	L-852K	UNIDIREC.	GREEN	L-868B (E)	
TM7HC-08045	EL111	COVER PLATE	N/A	N/A	L-868B (E)	
TM7HC-08046	EL111	L-852K	UNIDIREC.	GREEN	L-868B (E)	
TM7HC-08047	EL111	COVER PLATE	N/A	N/A	L-868B (E)	
TM7HC-08048	EL111	L-852K	UNIDIREC.	GREEN	L-868B (E)	
TM7HC-08049	EL111	COVER PLATE	N/A	N/A	L-868B (E)	
TM7HC-08050	EL111	L-852K	UNIDIREC.	GREEN	L-868B (E)	
TM7HC-08051	EL111	COVER PLATE	N/A	N/A	L-868B (E)	
TM7HC-08052	EL111	L-852K	UNIDIREC.	GREEN	L-868B (E)	
TM7HC-08053	EL111	COVER PLATE	N/A	N/A	L-868B (E)	
TM7HC-08054	EL111	L-852K	UNIDIREC.	GREEN	L-868B (E)	
TM7HC-08055	EL111	COVER PLATE	N/A	N/A	L-868B (E)	
TM7HC-08056	EL111	L-852K	UNIDIREC.	GREEN	L-868B (E)	
TM7HC-08057	EL111	COVER PLATE	N/A	N/A	L-868B (E)	
TM7HC-08058	EL111	L-852K	UNIDIREC.	GREEN	L-868B (E)	
TM7HC-08059	EL111	COVER PLATE	N/A	N/A	L-868B (E)	
TM7HC-08060	EL111	L-852K	UNIDIREC.	GREEN	L-868B (E)	
TM7HC-08061	EL111	COVER PLATE	N/A	N/A	L-868B (E)	
TM7HC-08062	EL111	L-852K	UNIDIREC.	GREEN	L-868B (E)	
TM7HC-08063	EL111	COVER PLATE	N/A	N/A	L-868B (E)	
TM7HC-08064	EL111	L-852K	UNIDIREC.	GREEN	L-868B (E)	
TM7HC-08065	EL111	COVER PLATE	N/A	N/A	L-868B (E)	
TM7HC-08066	EL111	L-852K	UNIDIREC.	GREEN	L-868B (E)	
TM7HC-08067	EL111	COVER PLATE	N/A	N/A	L-868B (E)	
TM7HC-08068	EL111	L-852K	UNIDIREC.	GREEN	L-868B (E)	
TM7HC-08075	EL111	L-852C	UNIDIREC.	YELLOW	L-868B (E)	
TM7HC-08076	EL111	L-852C	UNIDIREC.	YELLOW	L-868B (E)	

NOTES:

1. SEE SHEETS E-001 FOR GENERAL ELECTRICAL NOTES.

SHEET NOTES:

1. FOR (N) BASE CANS ON TWY M6 REFER TO EL900 SERIES. FOR ALL OTHER (N) BASE CANS CONTRACTOR MUST SURVEY (E) BASE CAN LOCATION AND INSTALL (N) BASE CAN AT SAME LOCATION AND ORIENTATION AND ALIGNMENT.
2. ALL LIGHTS MUST BE NEW AND LED U.O.N.
3. FOR ALL LIGHT FIXTURES (NEW AND REINSTALLED), FURNISH AND INSTALL CONNECTORS, SPACER RINGS, FLANGE RING, WITH PAVEMENT DAM, BOLTS, AND WASHERS.
4. FOR NEW LIGHTS, FURNISH AND INSTALL NEW TRANSFORMER SIZE PER MFG. RECOMMENDATIONS. SUPPLY WITH 6.6A PRIMARY/ 6.6A SECONDARY.
5. FOR EXISTING LIGHTS TO BE REMOVED AND REINSTALLED REFER TO SCHEDULE BELOW:

LIGHT TYPE	XFMR TYPE
TWY CTL UNIDIRECTIONAL (LED)	30/45

6. RECORD NUMBER AND DEPTH OF SPACERS.
7. L-868B BASE CAN HEIGHT SHALL BE 22" U.O.N. ON AREA PLANS.
8. L-867B BASE CAN HEIGHT SHALL BE 22" U.O.N. ON AREA PLANS.

ABBREVIATIONS:

BIDIREC. – BIDIRECTIONAL
OMNI – OMNIDIRECTIONAL
UNIDIREC. – UNIDIRECTIONAL
EXT – EXTENSION
(L) – LED (UNLESS OTHERWISE NOTED)
MFG. – MANUFACTURER
(RR) – REMOVE AND REINSTALL
(E) – EXISTING TO BE REUSED
(N) – NEW
N/A – NOT APPLICABLE

COLORADO LICENSED
DORON LEA
52246
2/15/19
PROFESSIONAL ENGINEER

CITY & COUNTY of DENVER

DENVER INTERNATIONAL AIRPORT

LEAN ENGINEERING

RUNWAY 17R-35L COMPLEX PAVEMENT REHABILITATION PACKAGE 1

ISSUE RECORD

NO.	BY	PURPOSE	DATE	CKD
1	LE	50% DESIGN	09/14/18	DL
2	LE	90% DESIGN	10/26/18	DL
3	LE	BID	12/26/18	DL
4	LE	CONSTRUCTION	2/15/19	DL

SCALE: AS INDICATED
DATE: FEBRUARY 15, 2019
DRAWN BY: KV
CHECKED BY: JA
FAA AIP NO:
WORK BREAKDOWN NO.
DESIGN CONTRACT NO. 201735882
CONST. CONTRACT NO. 201846271
VOLUME NO.
SHEET TITLE: FIXTURE SCHEDULE CIRCUIT TM7HC
SHEET NO. EL865

CADD FILE NO. _201735882-B1EELD-6334

D:\dropbox (lean photometrics)\active projects\1571801a rwy den 17r-35l reconstruction\01 drawings\working drawings\Sheets_201735882-B1EELD-6334.dwg Feb 12, 2019 - 5:33pm Kat

FIXTURE ID	REF. DWG	FAA DESIGNATION	FIXTURE TYPE	LENS COLOR	BASE CAN	COMMENTS
TECSB3-08001	EL112	L-852C	UNIDIREC.	GREEN	L-868B (N)	
TECSB3-08002	EL112	L-852C	UNIDIREC.	YELLOW	L-868B (N)	
TECSB3-08003	EL112	L-852C	UNIDIREC.	GREEN	L-868B (N)	
TECSB3-08004	EL112	L-852C	UNIDIREC.	YELLOW	L-868B (E)	
TECSB3-08005	EL112	L-852K	UNIDIREC.	GREEN	L-868B (E)	
TECSB3-08006	EL112	COVER PLATE	N/A	N/A	L-868B (E)	
TECSB3-08007	EL112	L-852K	UNIDIREC.	YELLOW	L-868B (E)	
TECSB3-08008	EL112	COVER PLATE	N/A	N/A	L-868B (E)	
TECSB3-08009	EL112	L-852K	UNIDIREC.	GREEN	L-868B (E)	
TECSB3-08010	EL112	COVER PLATE	N/A	N/A	L-868B (E)	
TECSB3-08011	EL112	L-852K	UNIDIREC.	YELLOW	L-868B (E)	
TECSB3-08012	EL112	COVER PLATE	N/A	N/A	L-868B (E)	
TECSB3-08013	EL112	L-852K	UNIDIREC.	GREEN	L-868B (E)	
TECSB3-08014	EL112	COVER PLATE	N/A	N/A	L-868B (E)	
TECSB3-08015	EL112	L-852K	UNIDIREC.	YELLOW	L-868B (E)	
TECSB3-08017	EL112	L-852K	UNIDIREC.	GREEN	L-868B (N)	
TECSB3-08019	EL112	L-852K	UNIDIREC.	YELLOW	L-868B (E)	
TECSB3-08020	EL112	COVER PLATE	N/A	N/A	L-868B (E)	
TECSB3-08021	EL112	L-852K	UNIDIREC.	GREEN	L-868B (E)	
TECSB3-08022	EL112	COVER PLATE	N/A	N/A	L-868B (E)	
TECSB3-08023	EL112	L-852D	UNIDIREC.	GREEN	L-868B (E)	
TECSB3-08024	EL112	L-852K	UNIDIREC.	GREEN	L-868B (E)	
TECSB3-08025	EL112	COVER PLATE	N/A	N/A	L-868B (E)	
TECSB3-08026	EL112	L-852K	UNIDIREC.	YELLOW	L-868B (E)	
TECSB3-08027	EL112	COVER PLATE	N/A	N/A	L-868B (E)	
TECSB3-08028	EL112	L-852K	UNIDIREC.	GREEN	L-868B (E)	
TECSB3-08029	EL112	COVER PLATE	N/A	N/A	L-868B (E)	
TECSB3-08030	EL112	L-852K	UNIDIREC.	YELLOW	L-868B (E)	
TECSB3-08031	EL112	COVER PLATE	N/A	N/A	L-868B (E)	
TECSB3-08032	EL112	L-852K	UNIDIREC.	GREEN	L-868B (E)	
TECSB3-08033	EL112	COVER PLATE	N/A	N/A	L-868B (E)	
TECSB3-08034	EL112	L-852K	UNIDIREC.	YELLOW	L-868B (E)	
TECSB3-08036	EL112	L-852K	UNIDIREC.	GREEN	L-868B (N)	
TECSB3-08038	EL112	L-852K	UNIDIREC.	YELLOW	L-868B (E)	
TECSB3-08039	EL112	COVER PLATE	N/A	N/A	L-868B (E)	
TECSB3-08040	EL112	L-852K	UNIDIREC.	GREEN	L-868B (E)	
TECSB3-08041	EL112	COVER PLATE	N/A	N/A	L-868B (E)	
TECSB3-08042	EL112	L-852D	UNIDIREC.	GREEN	L-868B (E)	
TESCB5-07015	EL112	L-852C	UNIDIREC.	GREEN	L-868B (E)	
TESCB5-07014	EL112	L-852C	UNIDIREC.	GREEN	L-868B (E)	
TESCB5-07012	EL112	COVER PLATE	N/A	N/A	L-868B (N)	
TESCB5-07009	EL112	L-852C	UNIDIREC.	GREEN	L-868B (E)	
TESCB5-07008	EL112	L-852C	UNIDIREC.	GREEN	L-868B (E)	
TESCB5-07007	EL116	L-852C	UNIDIREC.	YELLOW	L-868B (E)	
TESCB5-07006	EL116	L-852C	UNIDIREC.	GREEN	L-868B (E)	
TESCB5-07005	EL116	L-852C	UNIDIREC.	YELLOW	L-868B (E)	
TESCB5-07004	EL116	L-852C	UNIDIREC.	GREEN	L-868B (N)	
TESCB5-07003	EL116	L-852C	BIDIREC.	YELLOW	L-868B (E)	
TESCB5-07002	EL116	L-852C	BIDIREC.	GREEN	L-868B (E)	
TESCB5-07001	EL116	L-852C	BIDIREC.	GREEN	L-868B (E)	

TWY EC EDGE LIGHTS:

FIXTURE ID	REF. DWG	FAA DESIGNATION	FIXTURE TYPE	LENS COLOR	BASE CAN	COMMENTS
TECE1-07033	EL112	L-861T	OMNI	BLUE	L-868B (E)	
TECE1-07032	EL112	L-861T	OMNI	BLUE	L-868B (E)	
TECE1-07031	EL112	L-861T	OMNI	BLUE	L-868B (E)	
TECE1-07034	EL112	L-861T	OMNI	BLUE	L-868B (E)	
TECE1-07035	EL112	L-861T	OMNI	BLUE	L-868B (E)	
TECE1-07036	EL112	L-861T	OMNI	BLUE	L-868B (E)	
TECE1-07030	EL116	L-861T	OMNI	BLUE	L-868B (E)	
TECE1-07029	EL116	L-861T	OMNI	BLUE	L-868B (E)	
TECE1-07028	EL116	L-861T	OMNI	BLUE	L-868B (E)	
TECE1-07037	EL116	L-861T	OMNI	BLUE	L-868B (E)	
TECE1-07038	EL116	L-861T	OMNI	BLUE	L-868B (E)	
TECE1-07039	EL116	L-861T	OMNI	BLUE	L-868B (E)	

NOTES:

1. SEE SHEETS E-001 FOR GENERAL ELECTRICAL NOTES.

SHEET NOTES:

1. FOR (N) BASE CANS ON TWY M6 REFER TO EL900 SERIES. FOR ALL OTHER (N) BASE CANS CONTRACTOR MUST SURVEY (E) BASE CAN LOCATION AND INSTALL (N) BASE CAN AT SAME LOCATION AND ORIENTATION AND ALIGNMENT.
2. ALL LIGHTS MUST BE NEW AND LED U.O.N.
3. FOR ALL LIGHT FIXTURES (NEW AND REINSTALLED), FURNISH AND INSTALL CONNECTORS, SPACER RINGS, FLANGE RING, WITH PAVEMENT DAM, BOLTS, AND WASHERS.
4. FOR NEW LIGHTS, FURNISH AND INSTALL NEW TRANSFORMER SIZE PER MFG. RECOMMENDATIONS. SUPPLY WITH 6.6A PRIMARY/ 6.6A SECONDARY.
5. FOR EXISTING LIGHTS TO BE REMOVED AND REINSTALLED REFER TO SCHEDULE BELOW:

LIGHT TYPE	XFMR TYPE
TWY CTL UNIDIRECTIONAL (LED)	30/45

6. RECORD NUMBER AND DEPTH OF SPACERS.
7. L-868B BASE CAN HEIGHT SHALL BE 22" U.O.N. ON AREA PLANS.
8. L-867B BASE CAN HEIGHT SHALL BE 22" U.O.N. ON AREA PLANS.

ABBREVIATIONS:

BIDIREC. – BIDIRECTIONAL
OMNI – OMNIDIRECTIONAL
UNIDIREC. – UNIDIRECTIONAL
EXT – EXTENSION
(L) – LED (UNLESS OTHERWISE NOTED)
MFG. – MANUFACTURER
(RR) – REMOVE AND REINSTALL
(E) – EXISTING TO BE REUSED
(N) – NEW
N/A – NOT APPLICABLE

COLORADO LICENSED
AARON LEA
52246
2/15/19
PROFESSIONAL ENGINEER

CITY & COUNTY of DENVER

DENVER INTERNATIONAL AIRPORT

LEAN ENGINEERING

RUNWAY 17R-35L COMPLEX PAVEMENT REHABILITATION PACKAGE 1

ISSUE RECORD

NO.	BY	PURPOSE	DATE	CKD
1	LE	50% DESIGN	09/14/18	DL
2	LE	90% DESIGN	10/26/18	DL
3	LE	BID	12/26/18	DL
4	LE	ADDENDUM 2	1/17/19	DL
5	LE	CONSTRUCTION	2/15/19	DL

SCALE: AS INDICATED
DATE: FEBRUARY 15, 2019
DRAWN BY: KV
CHECKED BY: JA
FAA AIP NO:
WORK BREAKDOWN NO.
DESIGN CONTRACT NO. 201735882
CONST. CONTRACT NO. 201846271
VOLUME NO.
SHEET TITLE: FIXTURE SCHEDULE TWY EC
SHEET NO. EL866
353 OF 396
CADD FILE NO. _201735882-B1EELD-6334

D:\dropbox (lean photometrics)\active projects\1571801a rah den 17r-35l reconstruction\01 drawings\working drawings\sheets_201735882-B1EELD-6334.dwg Feb 12, 2019 - 5:33pm Kat

FIXTURE ID	REF. DWG	FAA DESIGNATION	FIXTURE TYPE	LENS COLOR	BASE CAN	COMMENTS
TM9SB3-08011	EL113	L-852K	UNIDIREC.	YELLOW	L-868B (E)	
TM9SB3-08012	EL113	COVER PLATE	N/A	N/A	L-868B (E)	
TM9SB3-08013	EL113	L-852K	UNIDIREC.	GREEN	L-868B (E)	
TM9SB3-08014	EL113	COVER PLATE	N/A	N/A	L-868B (E)	
TM9SB3-08015	EL113	L-852K	UNIDIREC.	YELLOW	L-868B (E)	
TM9SB3-08016	EL113	COVER PLATE	N/A	N/A	L-868B (E)	
TM9SB3-08017	EL113	L-852K	UNIDIREC.	GREEN	L-868B (E)	
TM9SB3-08018	EL113	COVER PLATE	N/A	N/A	L-868B (E)	
TM9SB3-08019	EL113	L-852K	UNIDIREC.	YELLOW	L-868B (E)	
TM9SB3-08020	EL113	COVER PLATE	N/A	N/A	L-868B (E)	
TM9SB3-08021	EL113	L-852K	UNIDIREC.	GREEN	L-868B (E)	
TM9SB3-08022	EL113	COVER PLATE	N/A	N/A	L-868B (E)	
TM9SB3-08023	EL113	L-852D	UNIDIREC.	GREEN	L-868B (E)	
TM9SB3-08001	EL114	L-852C	UNIDIREC.	GREEN	L-868B (E)	
TM9SB3-08002	EL114	L-852C	UNIDIREC.	YELLOW	L-868B (N)	
TM9SB3-08003	EL114	L-852C	UNIDIREC.	GREEN	L-868B (E)	
TM9SB3-08004	EL114	L-852D	UNIDIREC.	YELLOW	L-868B (E)	
TM9SB3-08005	EL114	L-852K	UNIDIREC.	GREEN	L-868B (E)	
TM9SB3-08006	EL114	COVER PLATE	N/A	N/A	L-868B (E)	
TM9SB3-08007	EL114	L-852K	UNIDIREC.	YELLOW	L-868B (E)	
TM9SB3-08008	EL114	COVER PLATE	N/A	N/A	L-868B (E)	
TM9SB3-08009	EL114	L-852K	UNIDIREC.	GREEN	L-868B (E)	
TM9SB3-08010	EL114	COVER PLATE	N/A	N/A	L-868B (E)	
TMC9-08037	EL114	L-852C	BIDIREC.	GREEN/YELLOW	L-868B (N)	
TM10SB3-08001	EL114	L-852C	UNIDIREC.	GREEN	L-868B (N)	
TM10SB3-08002	EL114	L-852C	UNIDIREC.	YELLOW	L-868B (N)	
TM10SB3-08003	EL114	L-852C	UNIDIREC.	GREEN	L-868B (E)	
TM10SB3-08004	EL114	L-852D	UNIDIREC.	YELLOW	L-868B (E)	
TM10SB3-08005	EL114	L-852K	UNIDIREC.	GREEN	L-868B (E)	
TM10SB3-08006	EL114	COVER PLATE	N/A	N/A	L-868B (E)	
TM10SB3-08007	EL114	L-852K	UNIDIREC.	YELLOW	L-868B (E)	
TM10SB3-08009	EL114	L-852K	UNIDIREC.	GREEN	L-868B (N)	
TM10SB3-08010	EL114	COVER PLATE	N/A	N/A	L-868B (E)	
TM10SB3-08011	EL114	L-852K	UNIDIREC.	YELLOW	L-868B (E)	
TM10SB3-08012	EL114	COVER PLATE	N/A	N/A	L-868B (E)	
TM10SB3-08013	EL114	L-852K	UNIDIREC.	GREEN	L-868B (E)	
TM10SB3-08014	EL114	COVER PLATE	N/A	N/A	L-868B (E)	
TM10SB3-08015	EL114	L-852K	UNIDIREC.	YELLOW	L-868B (E)	
TM10SB3-08016	EL114	COVER PLATE	N/A	N/A	L-868B (E)	
TM10SB3-08017	EL114	L-852K	UNIDIREC.	GREEN	L-868B (E)	
TM10SB3-08019	EL114	L-852K	UNIDIREC.	YELLOW	L-868B (N)	
TM10SB3-08021	EL114	L-852K	UNIDIREC.	GREEN	L-868B (N)	
TM10SB3-08023	EL114	L-852D	UNIDIREC.	GREEN	L-868B (N)	

NOTES:

1. SEE SHEETS E-001 FOR GENERAL ELECTRICAL NOTES.

SHEET NOTES:

1. FOR (N) BASE CANS ON TWY M6 REFER TO EL900 SERIES. FOR ALL OTHER (N) BASE CANS CONTRACTOR MUST SURVEY (E) BASE CAN LOCATION AND INSTALL (N) BASE CAN AT SAME LOCATION AND ORIENTATION AND ALIGNMENT.
2. ALL LIGHTS MUST BE NEW AND LED U.O.N.
3. FOR ALL LIGHT FIXTURES (NEW AND REINSTALLED), FURNISH AND INSTALL CONNECTORS, SPACER RINGS, FLANGE RING, WITH PAVEMENT DAM, BOLTS, AND WASHERS.
4. FOR NEW LIGHTS, FURNISH AND INSTALL NEW TRANSFORMER SIZE PER MFG. RECOMMENDATIONS. SUPPLY WITH 6.6A PRIMARY/ 6.6A SECONDARY.
5. FOR EXISTING LIGHTS TO BE REMOVED AND REINSTALLED REFER TO SCHEDULE BELOW:

LIGHT TYPE	XFMR TYPE
TWY CTL UNIDIRECTIONAL (LED)	30/45

6. RECORD NUMBER AND DEPTH OF SPACERS.
7. L-868B BASE CAN HEIGHT SHALL BE 22" U.O.N. ON AREA PLANS.
8. L-867B BASE CAN HEIGHT SHALL BE 22" U.O.N. ON AREA PLANS.

ABBREVIATIONS:

BIDIREC. – BIDIRECTIONAL
OMNI – OMNIDIRECTIONAL
UNIDIREC. – UNIDIRECTIONAL
EXT – EXTENSION
(L) – LED (UNLESS OTHERWISE NOTED)
MFG. – MANUFACTURER
(RR) – REMOVE AND REINSTALL
(E) – EXISTING TO BE REUSED
(N) – NEW
N/A – NOT APPLICABLE

COLORADO LICENSED
GORON LEA
52246
2/15/19
PROFESSIONAL ENGINEER

CITY & COUNTY of DENVER

DENVER INTERNATIONAL AIRPORT

LEAN ENGINEERING

RUNWAY 17R-35L COMPLEX PAVEMENT REHABILITATION PACKAGE 1

ISSUE RECORD

NO.	BY	PURPOSE	DATE	CKD
1	LE	50% DESIGN	09/14/18	DL
2	LE	90% DESIGN	10/26/18	DL
3	LE	BID	12/26/18	DL
4	LE	ADDENDUM 2	1/17/19	DL
5	LE	CONSTRUCTION	2/15/19	DL

SCALE: AS INDICATED
DATE: FEBRUARY 15, 2019
DRAWN BY: KV
CHECKED BY: JA
FAA AIP NO:
WORK BREAKDOWN NO.
DESIGN CONTRACT NO. 201735882
CONST. CONTRACT NO. 201846271
VOLUME NO.
SHEET TITLE: FIXTURE SCHEDULE TWY M9 & M10
SHEET NO. EL867
354 OF 396
CADD FILE NO. _201735882-B1EELD-6334

D:\dropbox (lean photometrics)\active projects\157180 ia rah den 17r-35l reconstruction\01 drawings\working drawings\sheets_201735882-B1EELD-6334.dwg Feb 12, 2019 - 5:33pm Kat

FIXTURE ID	REF. DWG	FAA DESIGNATION	FIXTURE TYPE	LENS COLOR	BASE CAN	COMMENTS
TM1SB1-08001	EL102	L-862S	UNIDIREC.	RED	L-867B (E)	SINGLE
TM1SB1-08002	EL102	L-852[illegible]S	UNIDIREC.	YELLOW/RED	L-868B (E)	DUAL
TM1SB1-08003	EL102	L-852[illegible]S	UNIDIREC.	YELLOW/RED	L-868B (E)	DUAL
TM1SB1-08004	EL102	L-852[illegible]S	UNIDIREC.	YELLOW/RED	L-868B (E)	DUAL
TM1SB1-08005	EL102	L-852[illegible]S	UNIDIREC.	YELLOW/RED	L-868B (E)	DUAL
TM1SB1-08006	EL102	L-852[illegible]S	UNIDIREC.	YELLOW/RED	L-868B (E)	DUAL
TM1SB1-08007	EL102	L-852[illegible]S	UNIDIREC.	YELLOW/RED	L-868B (E)	DUAL
TM1SB1-08008	EL102	L-852[illegible]S	UNIDIREC.	YELLOW/RED	L-868B (E)	DUAL
TM1SB1-08009	EL102	L-852[illegible]S	UNIDIREC.	YELLOW/RED	L-868B (E)	DUAL
TM1SB1-08010	EL102	L-852[illegible]S	UNIDIREC.	YELLOW/RED	L-868B (E)	DUAL
TM1SB1-08011	EL102	L-852[illegible]S	UNIDIREC.	YELLOW/RED	L-868B (E)	DUAL
TM1SB1-08012	EL102	L-852[illegible]S	UNIDIREC.	YELLOW/RED	L-868B (E)	DUAL
TM1SB1-08013	EL102	L-852[illegible]S	UNIDIREC.	YELLOW/RED	L-868B (E)	DUAL
TM1SB1-08014	EL102	L-862S	UNIDIRECT.	RED	L-867B (E)	SINGLE
TM2SB1-08001	EL102	L-862S	UNIDIREC.	RED	L-867B (E)	SINGLE
TM2SB1-08002	EL102	L-852[illegible]S	UNIDIREC.	YELLOW/RED	L-868B (E)	DUAL
TM2SB1-08003	EL102	L-852[illegible]S	UNIDIREC.	YELLOW/RED	L-868B (E)	DUAL
TM2SB1-08004	EL102	L-852[illegible]S	UNIDIREC.	YELLOW/RED	L-868B (E)	DUAL
TM2SB1-08005	EL102	L-852[illegible]S	UNIDIREC.	YELLOW/RED	L-868B (E)	DUAL
TM2SB1-08006	EL102	L-852[illegible]S	UNIDIREC.	YELLOW/RED	L-868B (E)	DUAL
TM2SB1-08007	EL102	L-852[illegible]S	UNIDIREC.	YELLOW/RED	L-868B (E)	DUAL
TM2SB1-08008	EL102	L-852[illegible]S	UNIDIREC.	YELLOW/RED	L-868B (E)	DUAL
TM2SB1-08009	EL102	L-852[illegible]S	UNIDIREC.	YELLOW/RED	L-868B (E)	DUAL
TM2SB1-08010	EL102	L-852[illegible]S	UNIDIREC.	YELLOW/RED	L-868B (E)	DUAL
TM2SB1-08011	EL102	L-852[illegible]S	UNIDIREC.	YELLOW/RED	L-868B (E)	DUAL
TM2SB1-08013	EL102	L-852[illegible]S	UNIDIREC.	YELLOW/RED	L-868B (E)	DUAL
TM2SB1-08014	EL102	L-852[illegible]S	UNIDIREC.	YELLOW/RED	L-868B (E)	DUAL
TM2SB1-08012	EL102	L-852S	UNIDIREC.	RED	L-867B (E)	SINGLE
TEASB1-08001	EL103	L-862S	UNIDIREC.	RED	L-867B (E)	SINGLE
TEASB1-08002	EL103	L-852[illegible]S	UNIDIREC.	YELLOW/RED	L-868B (E)	DUAL
TEASB1-08003	EL103	L-852[illegible]S	UNIDIREC.	YELLOW/RED	L-868B (E)	DUAL
TEASB1-08004	EL103	L-852[illegible]S	UNIDIREC.	YELLOW/RED	L-868B (E)	DUAL
TEASB1-08005	EL103	L-852[illegible]S	UNIDIREC.	YELLOW/RED	L-868B (E)	DUAL
TEASB1-08006	EL103	L-852[illegible]S	UNIDIREC.	YELLOW/RED	L-868B (E)	DUAL
TEASB1-08007	EL103	L-852[illegible]S	UNIDIREC.	YELLOW/RED	L-868B (E)	DUAL
TEASB1-08008	EL103	L-852[illegible]S	UNIDIREC.	YELLOW/RED	L-868B (E)	DUAL
TEASB1-08009	EL103	L-852[illegible]S	UNIDIREC.	YELLOW/RED	L-868B (E)	DUAL
TEASB1-08010	EL103	L-852[illegible]S	UNIDIREC.	YELLOW/RED	L-868B (E)	DUAL
TEASB1-08011	EL103	L-852[illegible]S	UNIDIREC.	YELLOW/RED	L-868B (E)	DUAL
TEASB1-08012	EL103	L-852[illegible]S	UNIDIREC.	YELLOW/RED	L-868B (E)	DUAL
TEASB1-08013	EL103	L-852[illegible]S	UNIDIREC.	YELLOW/RED	L-868B (E)	DUAL
TEASB1-08014	EL103	L-852[illegible]S	UNIDIREC.	YELLOW/RED	L-868B (E)	DUAL
TEASB1-08015	EL103	L-862S	UNIDIREC.	RED	L-867B (E)	SINGLE
TEASB1-08217	EL115	L-862S	UNIDIREC.	RED	L-867B (E)	SINGLE
TEASB1-08218	EL115	L-852[illegible]S	UNIDIREC.	YELLOW/RED	L-868B (E)	DUAL
TEASB1-08219	EL115	L-852[illegible]S	UNIDIREC.	YELLOW/RED	L-868B (E)	DUAL
TEASB1-08220	EL115	L-852[illegible]S	UNIDIREC.	YELLOW/RED	L-868B (E)	DUAL
TEASB1-08221	EL115	L-852[illegible]S	UNIDIREC.	YELLOW/RED	L-868B (E)	DUAL
TEASB1-08222	EL115	L-852[illegible]S	UNIDIREC.	YELLOW/RED	L-868B (E)	DUAL
TEASB1-08223	EL115	L-852[illegible]S	UNIDIREC.	YELLOW/RED	L-868B (E)	DUAL
TEASB1-08224	EL115	L-852[illegible]S	UNIDIREC.	YELLOW/RED	L-868B (E)	DUAL
TEASB1-08225	EL115	L-852[illegible]S	UNIDIREC.	YELLOW/RED	L-868B (E)	DUAL
TEASB1-08226	EL115	L-862S	UNIDIREC.	RED	L-867B (E)	SINGLE
TM4SB1-08001	EL105	L-862S	UNIDIREC.	RED	L-867B (E)	SINGLE
TM4SB1-08002	EL105	L-852[illegible]S	UNIDIREC.	YELLOW/RED	L-868B (E)	DUAL
TM4SB1-08003	EL105	L-852[illegible]S	UNIDIREC.	YELLOW/RED	L-868B (E)	DUAL
TM4SB1-08004	EL105	L-852[illegible]S	UNIDIREC.	YELLOW/RED	L-868B (E)	DUAL
TM4SB1-08005	EL105	L-852[illegible]S	UNIDIREC.	YELLOW/RED	L-868B (N)	DUAL
TM4SB1-08006	EL105	L-852[illegible]S	UNIDIREC.	YELLOW/RED	L-868B (N)	DUAL
TM4SB1-08007	EL105	L-852[illegible]S	UNIDIREC.	YELLOW/RED	L-868B (N)	DUAL
TM4SB1-08008	EL105	L-852[illegible]S	UNIDIREC.	YELLOW/RED	L-868B (N)	DUAL
TM4SB1-08009	EL105	L-852[illegible]S	UNIDIREC.	YELLOW/RED	L-868B (E)	DUAL
TM4SB1-08010	EL105	L-852[illegible]S	UNIDIREC.	YELLOW/RED	L-868B (E)	DUAL
TM4SB1-08011	EL105	L-852[illegible]S	UNIDIREC.	YELLOW/RED	L-868B (E)	DUAL
TM4SB1-08012	EL105	L-852[illegible]S	UNIDIREC.	YELLOW/RED	L-868B (E)	DUAL
TM4SB1-08013	EL105	L-852[illegible]S	UNIDIREC.	YELLOW/RED	L-868B (E)	DUAL
TM4SB1-08014	EL105	L-852[illegible]S	UNIDIREC.	YELLOW/RED	L-868B (E)	DUAL
TM4SB1-08015	EL105	L-852[illegible]S	UNIDIREC.	YELLOW/RED	L-868B (E)	DUAL
TM4SB1-08016	EL105	L-862S	UNIDIREC.	RED	L-867B (E)	SINGLE
TM5SB1-08001	EL106	L-862S	UNIDIREC.	RED	L-867B (E)	SINGLE
TM5SB1-08002	EL106	L-852[illegible]S	UNIDIREC.	YELLOW/RED	L-868B (E)	DUAL
TM5SB1-08003	EL106	L-852[illegible]S	UNIDIREC.	YELLOW/RED	L-868B (E)	DUAL
TM5SB1-08004	EL106	L-852[illegible]S	UNIDIREC.	YELLOW/RED	L-868B (E)	DUAL
TM5SB1-08005	EL106	L-852[illegible]S	UNIDIREC.	YELLOW/RED	L-868B (E)	DUAL
TM5SB1-08006	EL106	L-852[illegible]S	UNIDIREC.	YELLOW/RED	L-868B (E)	DUAL
TM5SB1-08007	EL106	L-852[illegible]S	UNIDIREC.	YELLOW/RED	L-868B (E)	DUAL
TM5SB1-08008	EL106	L-852[illegible]S	UNIDIREC.	YELLOW/RED	L-868B (E)	DUAL
TM5SB1-08009	EL106	L-852[illegible]S	UNIDIREC.	YELLOW/RED	L-868B (E)	DUAL

MATCH LINE SEE SHEET RIGHT

FIXTURE ID	REF. DWG	FAA DESIGNATION	FIXTURE TYPE	LENS COLOR	BASE CAN	COMMENTS

MATCH LINE SEE SHEET LEFT

TM5SB1-08009	EL106	L-852[illegible]S	UNIDIREC.	YELLOW/RED	L-868B (E)	DUAL
TM5SB1-08010	EL106	L-852[illegible]S	UNIDIREC.	YELLOW/RED	L-868B (E)	DUAL
TM5SB1-08011	EL106	L-852[illegible]S	UNIDIREC.	YELLOW/RED	L-868B (E)	DUAL
TM5SB1-08012	EL106	L-852[illegible]S	UNIDIREC.	YELLOW/RED	L-868B (E)	DUAL
TM5SB1-08013	EL106	L-852[illegible]S	UNIDIREC.	YELLOW/RED	L-868B (E)	DUAL
TM5SB1-08014	EL106	L-852[illegible]S	UNIDIREC.	YELLOW/RED	L-868B (E)	DUAL
TM5SB1-08015	EL106	L-852[illegible]S	UNIDIREC.	YELLOW/RED	L-868B (N)	DUAL
TM5SB1-08016	EL106	L-862S	UNIDIREC.	RED	L-867B (E)	SINGLE
TM6SB1-08001	EL109	L-862S	UNIDIREC.	RED	L-867B (N)	SINGLE
TM6SB1-08002	EL109	L-852[illegible]S	UNIDIREC.	YELLOW/RED	L-868B (N)	DUAL
TM6SB1-08003	EL109	L-852[illegible]S	UNIDIREC.	YELLOW/RED	L-868B (N)	DUAL
TM6SB1-08004	EL109	L-852[illegible]S	UNIDIREC.	YELLOW/RED	L-868B (N)	DUAL
TM6SB1-08005	EL109	L-852[illegible]S	UNIDIREC.	YELLOW/RED	L-868B (N)	DUAL
TM6SB1-08006	EL109	L-852[illegible]S	UNIDIREC.	YELLOW/RED	L-868B (N)	DUAL
TM6SB1-08007	EL109	L-852[illegible]S	UNIDIREC.	YELLOW/RED	L-868B (N)	DUAL
TM6SB1-08008	EL109	L-852[illegible]S	UNIDIREC.	YELLOW/RED	L-868B (N)	DUAL
TM6SB1-08009	EL109	L-852[illegible]S	UNIDIREC.	YELLOW/RED	L-868B (N)	DUAL
TM6SB1-08010	EL109	L-852[illegible]S	UNIDIREC.	YELLOW/RED	L-868B (N)	DUAL
TM6SB1-08011	EL109	L-852[illegible]S	UNIDIREC.	YELLOW/RED	L-868B (N)	DUAL
TM6SB1-08012	EL109	L-852[illegible]S	UNIDIREC.	YELLOW/RED	L-868B (N)	DUAL
TM6SB1-08013	EL109	L-852[illegible]S	UNIDIREC.	YELLOW/RED	L-868B (N)	DUAL
TM6SB1-08014	EL109	L-862S	UNIDIREC.	RED	L-867B (N)	SINGLE
TM7SB1-08001	EL111	L-862S	UNIDIREC.	RED	L-867B (E)	SINGLE
TM7SB1-08002	EL111	L-852[illegible]S	UNIDIREC.	YELLOW/RED	L-868B (E)	DUAL
TM7SB1-08003	EL111	L-852[illegible]S	UNIDIREC.	YELLOW/RED	L-868B (E)	DUAL
TM7SB1-08004	EL111	L-852[illegible]S	UNIDIREC.	YELLOW/RED	L-868B (E)	DUAL
TM7SB1-08005	EL111	L-852[illegible]S	UNIDIREC.	YELLOW/RED	L-868B (E)	DUAL
TM7SB1-08006	EL111	L-852[illegible]S	UNIDIREC.	YELLOW/RED	L-868B (E)	DUAL
TM7SB1-08007	EL111	L-852[illegible]S	UNIDIREC.	YELLOW/RED	L-868B (E)	DUAL
TM7SB1-08008	EL111	L-852[illegible]S	UNIDIREC.	YELLOW/RED	L-868B (E)	DUAL
TM7SB1-08009	EL111	L-852[illegible]S	UNIDIREC.	YELLOW/RED	L-868B (E)	DUAL
TM7SB1-08010	EL111	L-852[illegible]S	UNIDIREC.	YELLOW/RED	L-868B (E)	DUAL
TM7SB1-08011	EL111	L-852[illegible]S	UNIDIREC.	YELLOW/RED	L-868B (E)	DUAL
TM7SB1-08012	EL111	L-852[illegible]S	UNIDIREC.	YELLOW/RED	L-868B (E)	DUAL
TM7SB1-08013	EL111	L-852[illegible]S	UNIDIREC.	YELLOW/RED	L-868B (E)	DUAL
TM7SB1-08014	EL111	L-852[illegible]S	UNIDIREC.	YELLOW/RED	L-868B (E)	DUAL
TM7SB1-08015	EL111	L-852[illegible]S	UNIDIREC.	YELLOW/RED	L-868B (E)	DUAL
TM7SB1-08016	EL111	L-862S	UNIDIREC.	RED	L-867B (E)	SINGLE
TM9SB1-08001	EL113	L-862S	UNIDIREC.	RED	L-867B (E)	SINGLE
TM9SB1-08002	EL113	L-852[illegible]S	UNIDIREC.	YELLOW/RED	L-868B (E)	DUAL
TM9SB1-08003	EL113	L-852[illegible]S	UNIDIREC.	YELLOW/RED	L-868B (E)	DUAL
TM9SB1-08004	EL113	L-852[illegible]S	UNIDIREC.	YELLOW/RED	L-868B (E)	DUAL
TM9SB1-08005	EL113	L-852[illegible]S	UNIDIREC.	YELLOW/RED	L-868B (E)	DUAL
TM9SB1-08006	EL113	L-852[illegible]S	UNIDIREC.	YELLOW/RED	L-868B (E)	DUAL
TM9SB1-08007	EL114	L-852[illegible]S	UNIDIREC.	YELLOW/RED	L-868B (E)	DUAL
TM9SB1-08008	EL114	L-852[illegible]S	UNIDIREC.	YELLOW/RED	L-868B (E)	DUAL
TM9SB1-08009	EL114	L-852[illegible]S	UNIDIREC.	YELLOW/RED	L-868B (E)	DUAL
TM9SB1-08010	EL114	L-852[illegible]S	UNIDIREC.	YELLOW/RED	L-868B (E)	DUAL
TM9SB1-08011	EL114	L-852[illegible]S	UNIDIREC.	YELLOW/RED	L-868B (E)	DUAL
TM9SB1-08012	EL114	L-852[illegible]S	UNIDIREC.	YELLOW/RED	L-868B (E)	DUAL
TM9SB1-08013	EL114	L-852[illegible]S	UNIDIREC.	YELLOW/RED	L-868B (E)	DUAL
TM9SB1-08014	EL114	L-852[illegible]S	UNIDIREC.	YELLOW/RED	L-868B (E)	DUAL
TM9SB1-08015	EL114	L-862S	UNIDIREC.	RED	L-867B (E)	SINGLE
TM10SB1-08001	EL114	L-862S	UNIDIREC.	RED	L-867B (E)	SINGLE
TM10SB1-08002	EL114	L-852[illegible]S	UNIDIREC.	YELLOW/RED	L-868B (E)	DUAL
TM10SB1-08003	EL114	L-852[illegible]S	UNIDIREC.	YELLOW/RED	L-868B (E)	DUAL
TM10SB1-08004	EL114	L-852[illegible]S	UNIDIREC.	YELLOW/RED	L-868B (E)	DUAL
TM10SB1-08005	EL114	L-852[illegible]S	UNIDIREC.	YELLOW/RED	L-868B (E)	DUAL
TM10SB1-08006	EL114	L-852[illegible]S	UNIDIREC.	YELLOW/RED	L-868B (E)	DUAL
TM10SB1-08007	EL114	L-852[illegible]S	UNIDIREC.	YELLOW/RED	L-868B (N)	DUAL
TM10SB1-08008	EL114	L-852[illegible]S	UNIDIREC.	YELLOW/RED	L-868B (N)	DUAL
TM10SB1-08009	EL114	L-852[illegible]S	UNIDIREC.	YELLOW/RED	L-868B (E)	DUAL
TM10SB1-08010	EL114	L-852[illegible]S	UNIDIREC.	YELLOW/RED	L-868B (E)	DUAL
TM10SB1-08011	EL114	L-852[illegible]S	UNIDIREC.	YELLOW/RED	L-868B (E)	DUAL
TM10SB1-08012	EL114	L-852[illegible]S	UNIDIREC.	YELLOW/RED	L-868B (E)	DUAL
TM10SB1-08013	EL114	L-852[illegible]S	UNIDIREC.	YELLOW/RED	L-868B (E)	DUAL
TM10SB1-08014	EL114	L-852[illegible]S	UNIDIREC.	YELLOW/RED	L-868B (E)	DUAL
TM10SB1-08015	EL114	L-862S	UNIDIREC.	RED	L-867B (E)	SINGLE
TECSB1-08001	EL112	L-862S	UNIDIREC.	RED	L-867B (E)	SINGLE
TECSB1-08002	EL112	L-852[illegible]S	UNIDIREC.	YELLOW/RED	L-868B (E)	DUAL
TECSB1-08003	EL112	L-852[illegible]S	UNIDIREC.	YELLOW/RED	L-868B (E)	DUAL
TECSB1-08004	EL112	L-852[illegible]S	UNIDIREC.	YELLOW/RED	L-868B (E)	DUAL
TECSB1-08005	EL112	L-852[illegible]S	UNIDIREC.	YELLOW/RED	L-868B (E)	DUAL

MATCH LINE SEE SHEET EL869

NOTES:

1. SEE SHEETS E-001 FOR GENERAL ELECTRICAL NOTES.

SHEET NOTES:

1. FOR (N) BASE CANS ON TWY M6 REFER TO EL900 SERIES. FOR ALL OTHER (N) BASE CANS CONTRACTOR MUST SURVEY (E) BASE CAN LOCATION AND INSTALL (N) BASE CAN AT SAME LOCATION AND ORIENTATION AND ALIGNMENT.
2. ALL LIGHTS MUST BE NEW AND LED U.O.N.
3. FOR ALL LIGHT FIXTURES (NEW AND REINSTALLED), FURNISH AND INSTALL CONNECTORS, SPACER RINGS, FLANGE RING, WITH PAVEMENT DAM, BOLTS, AND WASHERS.
4. FOR NEW LIGHTS, FURNISH AND INSTALL NEW TRANSFORMER SIZE PER MFG. RECOMMENDATIONS. SUPPLY WITH 6.6A PRIMARY/ 6.6A SECONDARY.
5. FOR EXISTING LIGHTS TO BE REMOVED AND REINSTALLED REFER TO SCHEDULE BELOW:

LIGHT TYPE	XFMR TYPE
TWY CTL UNIDIRECTIONAL (LED)	30/45

6. RECORD NUMBER AND DEPTH OF SPACERS.
7. L-868B BASE CAN HEIGHT SHALL BE 22" U.O.N. ON AREA PLANS.
8. L-867B BASE CAN HEIGHT SHALL BE 22" U.O.N. ON AREA PLANS.

ABBREVIATIONS:

BIDIREC. – BIDIRECTIONAL
OMNI – OMNIDIRECTIONAL
UNIDIREC. – UNIDIRECTIONAL
EXT – EXTENSION
(L) – LED (UNLESS OTHERWISE NOTED)
MFG. – MANUFACTURER
(RR) – REMOVE AND REINSTALL
(E) – EXISTING TO BE REUSED
(N) – NEW
N/A – NOT APPLICABLE

COLORADO LICENSED
GORON LEA
52246
2/15/19
PROFESSIONAL ENGINEER

CITY & COUNTY of DENVER

DENVER INTERNATIONAL AIRPORT

LEAN ENGINEERING

RUNWAY 17R-35L COMPLEX PAVEMENT REHABILITATION PACKAGE 1

ISSUE RECORD

NO.	BY	PURPOSE	DATE	CKD
1	LE	50% DESIGN	09/14/18	DL
2	LE	90% DESIGN	10/26/18	DL
3	LE	BID	12/26/18	DL
4	LE	ADDENDUM 2	1/17/19	DL
5	LE	CONSTRUCTION	2/15/19	DL

SCALE: AS INDICATED
DATE: FEBRUARY 15, 2019
DRAWN BY: KV
CHECKED BY: JA
FAA AIP NO:
WORK BREAKDOWN NO.
DESIGN CONTRACT NO. 201735882
CONST. CONTRACT NO. 201846271
VOLUME NO.
SHEET TITLE: FIXTURE SCHEDULE CIRCUIT TMSB (1 OF 2)
SHEET NO. EL868
355 OF 396
CADD FILE NO. _201735882-B1EELD-6334

Feb 12, 2019 – 5:34pm Kat
D:\dropbox (lean photometrics)\active projects\157180 ia rah den 17r-35l reconstruction\01 drawings\working drawings\sheets_201735882-B1EELD-6334.dwg

FIXTURE ID	REF. DWG	FAA DESIGNATION	FIXTURE TYPE	LENS COLOR	BASE CAN	COMMENTS
MATCH LINE SEE SHEET EL868						
TECSB1-08006	EL112	L-852S	UNIDIREC.	YELLOW/RED	L-868B (E)	DUAL
TECSB1-08007	EL112	L-852S	UNIDIREC.	YELLOW/RED	L-868B (E)	DUAL
TECSB1-08008	EL112	L-852S	UNIDIREC.	YELLOW/RED	L-868B (E)	DUAL
TECSB1-08009	EL112	L-852S	UNIDIREC.	YELLOW/RED	L-868B (E)	DUAL
TECSB1-08010	EL112	L-852S	UNIDIREC.	YELLOW/RED	L-868B (E)	DUAL
TECSB1-08011	EL112	L-852S	UNIDIREC.	YELLOW/RED	L-868B (E)	DUAL
TECSB1-08012	EL112	L-852S	UNIDIREC.	YELLOW/RED	L-868B (E)	DUAL
TECSB1-08013	EL112	L-852S	UNIDIREC.	YELLOW/RED	L-868B (E)	DUAL
TECSB1-08014	EL112	L-852S	UNIDIREC.	YELLOW/RED	L-868B (E)	DUAL
TECSB1-08015	EL112	L-852S	UNIDIREC.	YELLOW/RED	L-868B (E)	DUAL
TECSB1-08016	EL112	L-862S	UNIDIREC.	RED	L-867B (E)	SINGLE
TECSB4-07001	EL116	Cover Plate	N/A	N/A	L-868B (E)	N/A
TECSB4-08002	EL116	Cover Plate	N/A	N/A	L-868B (E)	N/A
TECSB4-08003	EL116	Cover Plate	N/A	N/A	L-868B (E)	N/A
TECSB4-08004	EL116	Cover Plate	N/A	N/A	L-868B (E)	N/A
TECSB4-08005	EL116	Cover Plate	N/A	N/A	L-868B (E)	N/A
TECSB4-08006	EL116	Cover Plate	N/A	N/A	L-868B (E)	N/A
TECSB4-08007	EL116	Cover Plate	N/A	N/A	L-868B (E)	N/A
TECSB4-08008	EL116	Cover Plate	N/A	N/A	L-868B (E)	N/A
TECSB4-07010	EL116	Cover Plate	N/A	N/A	L-868B (E)	N/A
TECSB4-08010	EL116	L-862S	UNIDIREC.	RED	L-867B (N)	SINGLE
TECSB4-08011	EL116	L-852S	UNIDIREC.	YELLOW/RED	L-868B (N)	DUAL
TECSB4-08012	EL116	L-852S	UNIDIREC.	YELLOW/RED	L-868B (N)	DUAL
TECSB4-08013	EL116	L-852S	UNIDIREC.	YELLOW/RED	L-868B (N)	DUAL
TECSB4-08014	EL116	L-852S	UNIDIREC.	YELLOW/RED	L-868B (N)	DUAL
TECSB4-08015	EL116	L-852S	UNIDIREC.	YELLOW/RED	L-868B (N)	DUAL
TECSB4-08016	EL116	L-852S	UNIDIREC.	YELLOW/RED	L-868B (N)	DUAL
TECSB4-08017	EL116	L-852S	UNIDIREC.	YELLOW/RED	L-868B (N)	DUAL
TECSB4-08018	EL116	L-862S	UNIDIREC.	RED	L-867B (N)	SINGLE

NOTES:

1. SEE SHEETS E-001 FOR GENERAL ELECTRICAL NOTES.

SHEET NOTES:

1. FOR (N) BASE CANS ON TWY M6 REFER TO EL900 SERIES. FOR ALL OTHER (N) BASE CANS CONTRACTOR MUST SURVEY (E) BASE CAN LOCATION AND INSTALL (N) BASE CAN AT SAME LOCATION AND ORIENTATION AND ALIGNMENT.
2. ALL LIGHTS MUST BE NEW AND LED U.O.N.
3. FOR ALL LIGHT FIXTURES (NEW AND REINSTALLED), FURNISH AND INSTALL CONNECTORS, SPACER RINGS, FLANGE RING, WITH PAVEMENT DAM, BOLTS, AND WASHERS.
4. FOR NEW LIGHTS, FURNISH AND INSTALL NEW TRANSFORMER SIZE PER MFG. RECOMMENDATIONS. SUPPLY WITH 6.6A PRIMARY/ 6.6A SECONDARY.
5. FOR EXISTING LIGHTS TO BE REMOVED AND REINSTALLED REFER TO SCHEDULE BELOW:

LIGHT TYPE	XFMR TYPE
TWY CTL UNIDIRECTIONAL (LED)	30/45

6. RECORD NUMBER AND DEPTH OF SPACERS.
7. L-868B BASE CAN HEIGHT SHALL BE 22" U.O.N. ON AREA PLANS.
8. L-867B BASE CAN HEIGHT SHALL BE 22" U.O.N. ON AREA PLANS.

ABBREVIATIONS:

BIDIREC. – BIDIRECTIONAL
OMNI – OMNIDIRECTIONAL
UNIDIREC. – UNIDIRECTIONAL
EXT – EXTENSION
(L) – LED (UNLESS OTHERWISE NOTED)
MFG. – MANUFACTURER
(RR) – REMOVE AND REINSTALL
(E) – EXISTING TO BE REUSED
(N) – NEW
N/A – NOT APPLICABLE

COLORADO LICENSED
GORON LEA
52246
2/15/19
PROFESSIONAL ENGINEER

CITY & COUNTY of DENVER

DENVER INTERNATIONAL AIRPORT

LEAN ENGINEERING

RUNWAY 17R-35L COMPLEX PAVEMENT REHABILITATION PACKAGE 1

ISSUE RECORD

NO.	BY	PURPOSE	DATE	CKD
1	LE	50% DESIGN	09/14/18	DL
2	LE	90% DESIGN	10/26/18	DL
3	LE	BID	12/26/18	DL
4	LE	CONSTRUCTION	2/15/19	DL

SCALE: AS INDICATED
DATE: FEBRUARY 15, 2019
DRAWN BY: KV
CHECKED BY: JA
FAA AIP NO:
WORK BREAKDOWN NO.
DESIGN CONTRACT NO. 201735882
CONST. CONTRACT NO. 201846271
VOLUME NO.
SHEET TITLE: FIXTURE SCHEDULE CIRCUIT TMSB (2 OF 2)
SHEET NO. EL869
356 OF 396
CADD FILE NO. _201735882-B1EELD-6334

D:\dropbox (lean photometrics)\active projects\1571801a rah den 17r-35l reconstruction\01 drawings\working drawings\sheets_201735882-B1EELD-6334.dwg Feb 12, 2019 - 5:34pm Kat

FIXTURE ID	REF. DWG	FAA DESIGNATION	FIXTURE TYPE	LENS COLOR	BASE CAN	COMMENTS
TME1-02501	EL102	L-861T	OMNI	BLUE	L-867B (E)	
TME1-02502	EL102	L-861T	OMNI	BLUE	L-867B (E)	
TME1-02503	EL102	L-861T	OMNI	BLUE	L-867B (E)	
TME1-02504	EL102	L-861T	OMNI	BLUE	L-867B (E)	
TME1-02505	EL102	L-861T	OMNI	BLUE	L-867B (E)	
TME1-02506	EL102	L-861T	OMNI	BLUE	L-867B (E)	
TME1-08040	EL102	L-861T	OMNI	BLUE	L-867B (E)	
TME1-08041	EL102	L-861T	OMNI	BLUE	L-867B (E)	
TME1-08042	EL102	L-861T	OMNI	BLUE	L-867B (E)	
TME1-08043	EL102	L-861T	OMNI	BLUE	L-867B (E)	
TME1-08045	EL102	L-861T	OMNI	BLUE	L-867B (E)	
TME1-08046	EL102	L-861T	OMNI	BLUE	L-867B (E)	
TME1-08047	EL102	L-861T	OMNI	BLUE	L-867B (E)	
TME1-08048	EL102	L-861T	OMNI	BLUE	L-867B (E)	
TME1-08049	EL102	L-861T	OMNI	BLUE	L-867B (E)	
TME1-08050	EL102	L-861T	OMNI	BLUE	L-867B (E)	
TME1-08051	EL102	L-861T	OMNI	BLUE	L-867B (E)	
TME1-08052	EL102	L-861T	OMNI	BLUE	L-867B (E)	
TME1-08053	EL102	L-861T	OMNI	BLUE	L-867B (E)	
TME1-08054	EL102	L-861T	OMNI	BLUE	L-867B (E)	
TME1-08055	EL102	L-861T	OMNI	BLUE	L-867B (E)	
TME1-08056	EL102	L-861T	OMNI	BLUE	L-867B (E)	
TME1-08057	EL102	L-861T	OMNI	BLUE	L-867B (E)	
TME1-08058	EL102	L-861T	OMNI	BLUE	L-867B (E)	
TME1-08059	EL102	L-861T	OMNI	BLUE	L-867B (E)	
TME1-08060	EL102	L-861T	OMNI	BLUE	L-867B (E)	
TME1-08061	EL102	L-861T	OMNI	BLUE	L-867B (E)	
TME1-08062	EL102	L-861T	OMNI	BLUE	L-867B (E)	
TME1-08063	EL102	L-861T	OMNI	BLUE	L-867B (E)	
TME1-08064	EL102	L-861T	OMNI	BLUE	L-867B (E)	
TME1-08065	EL102	L-861T	OMNI	BLUE	L-867B (E)	
TME1-08066	EL102	L-861T	OMNI	BLUE	L-867B (E)	
TME1-08067	EL102	L-861T	OMNI	BLUE	L-867B (E)	
TME1-08068	EL102	L-861T	OMNI	BLUE	L-867B (E)	
TME1-08069	EL102	L-861T	OMNI	BLUE	L-867B (E)	
TME1-08070	EL102	L-861T	OMNI	BLUE	L-867B (E)	
TME1-08071	EL102	L-861T	OMNI	BLUE	L-867B (E)	
TME1-08072	EL102	L-861T	OMNI	BLUE	L-867B (E)	
TME1-08073	EL102	L-861T	OMNI	BLUE	L-867B (E)	
TME1-08074	EL102	L-861T	OMNI	BLUE	L-867B (E)	
TME1-08075	EL102	L-861T	OMNI	BLUE	L-867B (E)	
TME1-08094	EL103	L-861T	OMNI	BLUE	L-867B (E)	
TME1-08095	EL103	L-861T	OMNI	BLUE	L-867B (E)	
TME1-08096	EL103	L-861T	OMNI	BLUE	L-867B (E)	
TME1-08097	EL103	L-861T	OMNI	BLUE	L-867B (E)	
TME1-08098	EL103	L-861T	OMNI	BLUE	L-867B (E)	
TME1-08099	EL103	L-861T	OMNI	BLUE	L-867B (E)	
TME1-08100	EL103	L-861T	OMNI	BLUE	L-867B (E)	
TME1-08101	EL103	L-861T	OMNI	BLUE	L-867B (E)	
TME1-08110	EL103	L-861T	OMNI	BLUE	L-867B (E)	
TME1-08111	EL103	L-861T	OMNI	BLUE	L-867B (E)	
TME1-08112	EL103	L-861T	OMNI	BLUE	L-867B (E)	
TME1-08113	EL103	L-861T	OMNI	BLUE	L-867B (E)	
TME1-08114	EL103	L-861T	OMNI	BLUE	L-867B (E)	
TME1-08115	EL103	L-861T	OMNI	BLUE	L-867B (E)	
TME1-08116	EL103	L-861T	OMNI	BLUE	L-867B (E)	
TME1-08117	EL103	L-861T	OMNI	BLUE	L-867B (E)	
TME1-08118	EL103	L-861T	OMNI	BLUE	L-867B (E)	
TME1-08144	EL105	L-861T	OMNI	BLUE	L-867B (E)	
TME1-08145	EL105	L-861T	OMNI	BLUE	L-867B (E)	
TME1-08146	EL105	L-861T	OMNI	BLUE	L-867B (E)	
TME1-08147	EL105	L-861T	OMNI	BLUE	L-867B (E)	
TME1-08148	EL105	L-861T	OMNI	BLUE	L-867B (E)	
TME1-08149	EL105	L-861T	OMNI	BLUE	L-867B (E)	
TME1-08150	EL105	L-861T	OMNI	BLUE	L-867B (E)	
TME1-08151	EL105	L-861T	OMNI	BLUE	L-867B (E)	
TME1-08152	EL105	L-861T	OMNI	BLUE	L-867B (E)	
TME1-08189	EL105	L-861T	OMNI	BLUE	L-867B (E)	
TME1-08165	EL105	L-861T	OMNI	BLUE	L-867B (E)	
TME1-08166	EL105	L-861T	OMNI	BLUE	L-867B (E)	
TME1-08167	EL105	L-861T	OMNI	BLUE	L-867B (E)	
TME1-08168	EL105	L-861T	OMNI	BLUE	L-867B (E)	
TME1-08169	EL105	L-861T	OMNI	BLUE	L-867B (E)	
TME1-08170	EL105	L-861T	OMNI	BLUE	L-867B (E)	
TME1-08171	EL105	L-861T	OMNI	BLUE	L-867B (E)	
TME1-08172	EL105	L-861T	OMNI	BLUE	L-867B (E)	
TME1-08173	EL105	L-861T	OMNI	BLUE	L-867B (E)	
TME1-08174	EL105	L-861T	OMNI	BLUE	L-867B (E)	

MATCH LINE SEE SHEET RIGHT

FIXTURE ID	REF. DWG	FAA DESIGNATION	FIXTURE TYPE	LENS COLOR	BASE CAN	COMMENTS

MATCH LINE SEE SHEET LEFT

TME1-08175	EL105	L-861T	OMNI	BLUE	L-867B (E)	
TME1-08176	EL105	L-861T	OMNI	BLUE	L-867B (E)	
TME1-08177	EL105	L-861T	OMNI	BLUE	L-867B (E)	
TME1-08178	EL105	L-861T	OMNI	BLUE	L-867B (E)	
TME1-08179	EL106	L-861T	OMNI	BLUE	L-867B (E)	
TME1-08180	EL106	L-861T	OMNI	BLUE	L-867B (E)	
TME1-08181	EL106	L-861T	OMNI	BLUE	L-867B (E)	
TME1-08182	EL106	L-861T	OMNI	BLUE	L-867B (E)	
TME1-08183	EL106	L-861T	OMNI	BLUE	L-867B (E)	
TME1-08184	EL106	L-861T	OMNI	BLUE	L-867B (E)	
TME1-08185	EL106	COVER PLATE	N/A	N/A	L-867B (E)	
TME1-08186	EL106	COVER PLATE	N/A	N/A	L-867B (E)	
TME1-08187	EL106	COVER PLATE	N/A	N/A	L-867B (E)	

NOTES:

1. SEE SHEETS E-001 FOR GENERAL ELECTRICAL NOTES.

SHEET NOTES:

1. FOR (N) BASE CANS ON TWY M6 REFER TO EL900 SERIES. FOR ALL OTHER (N) BASE CANS CONTRACTOR MUST SURVEY (E) BASE CAN LOCATION AND INSTALL (N) BASE CAN AT SAME LOCATION AND ORIENTATION AND ALIGNMENT.
2. ALL LIGHTS MUST BE NEW AND LED U.O.N.
3. FOR ALL LIGHT FIXTURES (NEW AND REINSTALLED), FURNISH AND INSTALL CONNECTORS, SPACER RINGS, FLANGE RING, WITH PAVEMENT DAM, BOLTS, AND WASHERS.
4. FOR NEW LIGHTS, FURNISH AND INSTALL NEW TRANSFORMER SIZE PER MFG. RECOMMENDATIONS. SUPPLY WITH 6.6A PRIMARY/ 6.6A SECONDARY.
5. FOR EXISTING LIGHTS TO BE REMOVED AND REINSTALLED REFER TO SCHEDULE BELOW:

LIGHT TYPE	XFMR TYPE
TWY CTL UNIDIRECTIONAL (LED)	30/45

6. RECORD NUMBER AND DEPTH OF SPACERS.
7. L-868B BASE CAN HEIGHT SHALL BE 22" U.O.N. ON AREA PLANS.
8. L-867B BASE CAN HEIGHT SHALL BE 22" U.O.N. ON AREA PLANS.

ABBREVIATIONS:

BIDIREC. – BIDIRECTIONAL
OMNI – OMNIDIRECTIONAL
UNIDIREC. – UNIDIRECTIONAL
EXT – EXTENSION
(L) – LED (UNLESS OTHERWISE NOTED)
MFG. – MANUFACTURER
(RR) – REMOVE AND REINSTALL
(E) – EXISTING TO BE REUSED
(N) – NEW
N/A – NOT APPLICABLE

COLORADO LICENSED
AARON LEA
52246
2/15/19
PROFESSIONAL ENGINEER

CITY & COUNTY of DENVER

DENVER INTERNATIONAL AIRPORT

LEAN ENGINEERING

RUNWAY 17R-35L COMPLEX PAVEMENT REHABILITATION PACKAGE 1

ISSUE RECORD

NO.	BY	PURPOSE	DATE	CKD
1	LE	50% DESIGN	09/14/18	DL
2	LE	90% DESIGN	10/26/18	DL
3	LE	BID	12/26/18	DL
4	LE	CONSTRUCTION	2/15/19	DL

SCALE: AS INDICATED
DATE: FEBRUARY 15, 2019
DRAWN BY: KV
CHECKED BY: JA
FAA AIP NO:
WORK BREAKDOWN NO.
DESIGN CONTRACT NO. 201735882
CONST. CONTRACT NO. 201846271
VOLUME NO.
SHEET TITLE: FIXTURE SCHEDULE CIRCUIT TME1
SHEET NO. EL870
357 OF 396
CADD FILE NO. _201735882-B1EELD-6334

D:\dropbox (lean photometrics)\active projects\157801a rah den 17r-35l reconstruction\01 drawings\working drawings\sheets_201735882-B1EELD-6334.dwg Feb 12, 2019 - 5:34pm Kat

FIXTURE ID	REF. DWG	FAA DESIGNATION	FIXTURE TYPE	LENS COLOR	BASE CAN	COMMENTS
TME2-08137	EL112	L-861T	OMNI	BLUE	L-867B (E)	
TME2-08138	EL112	L-861T	OMNI	BLUE	L-867B (E)	
TME2-08139	EL112	L-861T	OMNI	BLUE	L-867B (E)	
TME2-08140	EL112	L-861T	OMNI	BLUE	L-867B (E)	
TME2-08141	EL112	L-861T	OMNI	BLUE	L-867B (E)	
TME2-08142	EL112	L-861T	OMNI	BLUE	L-867B (E)	
TME2-08143	EL112	L-861T	OMNI	BLUE	L-867B (E)	
TME2-08144	EL112	L-861T	OMNI	BLUE	L-867B (E)	
TME2-08145	EL112	L-861T	OMNI	BLUE	L-867B (E)	
TME2-08146	EL112	L-861T	OMNI	BLUE	L-867B (E)	
TME2-08156	EL112	L-861T	OMNI	BLUE	L-867B (E)	
TME2-08155	EL112	L-861T	OMNI	BLUE	L-867B (E)	
TME2-08154	EL112	L-861T	OMNI	BLUE	L-867B (E)	
TME2-08153	EL112	L-861T	OMNI	BLUE	L-867B (E)	
TME2-08152	EL112	L-861T	OMNI	BLUE	L-867B (E)	
TME2-08151	EL112	L-861T	OMNI	BLUE	L-867B (E)	
TME2-08150	EL112	L-861T	OMNI	BLUE	L-867B (E)	
TME2-08149	EL112	L-861T	OMNI	BLUE	L-867B (E)	
TME2-08148	EL112	L-861T	OMNI	BLUE	L-867B (E)	
TME2-08147	EL112	L-861T	OMNI	BLUE	L-867B (E)	
TME2-08188	EL114	L-861T	OMNI	BLUE	L-867B (E)	
TME2-08190	EL114	L-861T	OMNI	BLUE	L-867B (E)	
TME2-08191	EL114	L-861T	OMNI	BLUE	L-867B (E)	
TME2-08193	EL114	L-861T	OMNI	BLUE	L-867B (E)	

NOTES:

1. SEE SHEETS E-001 FOR GENERAL ELECTRICAL NOTES.

SHEET NOTES:

1. FOR (N) BASE CANS ON TWY M6 REFER TO EL900 SERIES. FOR ALL OTHER (N) BASE CANS CONTRACTOR MUST SURVEY (E) BASE CAN LOCATION AND INSTALL (N) BASE CAN AT SAME LOCATION AND ORIENTATION AND ALIGNMENT.
2. ALL LIGHTS MUST BE NEW AND LED U.O.N.
3. FOR ALL LIGHT FIXTURES (NEW AND REINSTALLED), FURNISH AND INSTALL CONNECTORS, SPACER RINGS, FLANGE RING, WITH PAVEMENT DAM, BOLTS, AND WASHERS.
4. FOR NEW LIGHTS, FURNISH AND INSTALL NEW TRANSFORMER SIZE PER MFG. RECOMMENDATIONS. SUPPLY WITH 6.6A PRIMARY/ 6.6A SECONDARY.
5. FOR EXISTING LIGHTS TO BE REMOVED AND REINSTALLED REFER TO SCHEDULE BELOW:

LIGHT TYPE	XFMR TYPE
TWY CTL UNIDIRECTIONAL (LED)	30/45

6. RECORD NUMBER AND DEPTH OF SPACERS.
7. L-868B BASE CAN HEIGHT SHALL BE 22" U.O.N. ON AREA PLANS.
8. L-867B BASE CAN HEIGHT SHALL BE 22" U.O.N. ON AREA PLANS.

ABBREVIATIONS:

BIDIREC. – BIDIRECTIONAL
OMNI – OMNIDIRECTIONAL
UNIDIREC. – UNIDIRECTIONAL
EXT – EXTENSION
(L) – LED (UNLESS OTHERWISE NOTED)
MFG. – MANUFACTURER
(RR) – REMOVE AND REINSTALL
(E) – EXISTING TO BE REUSED
(N) – NEW
N/A – NOT APPLICABLE

COLORADO LICENSED
JORON LEA
52246
2/15/19
PROFESSIONAL ENGINEER

CITY & COUNTY of DENVER

DENVER INTERNATIONAL AIRPORT

LEAN ENGINEERING

RUNWAY 17R-35L COMPLEX PAVEMENT REHABILITATION PACKAGE 1

ISSUE RECORD

NO.	BY	PURPOSE	DATE	CKD
1	LE	50% DESIGN	09/14/18	DL
2	LE	90% DESIGN	10/26/18	DL
3	LE	BID	12/26/18	DL
4	LE	CONSTRUCTION	2/15/19	DL

SCALE: AS INDICATED
DATE: FEBRUARY 15, 2019
DRAWN BY: KV
CHECKED BY: JA
FAA AIP NO:
WORK BREAKDOWN NO.
DESIGN CONTRACT NO. 201735882
CONST. CONTRACT NO. 201846271
VOLUME NO.
SHEET TITLE: FIXTURE SCHEDULE CIRCUIT TME2
SHEET NO. EL871
358 OF 396
CADD FILE NO. _201735882-B1EELD-6334

D:\dropbox (lean photometrics)\active projects\1571801a rah den 17-35l reconstruction\01 drawings\working drawings\sheets_201735882-B1EELD-6334.dwg Feb 12, 2019 - 5:34pm Kat

FIXTURE ID	REF. DWG	FAA DESIGNATION	FIXTURE TYPE	LENS COLOR	BASE CAN	COMMENTS
TME4-08012	EL106	L-861T	OMNI	BLUE	L-867B (E)	
TME4-08013	EL106	L-861T	OMNI	BLUE	L-867B (E)	
TME4-08014	EL106	L-861T	OMNI	BLUE	L-867B (E)	
TME4-08015	EL106	L-861T	OMNI	BLUE	L-867B (E)	
TME4-08016	EL106	L-861T	OMNI	BLUE	L-867B (E)	
TME4-08017	EL106	L-861T	OMNI	BLUE	L-867B (E)	
TME4-08018	EL106	L-861T	OMNI	BLUE	L-867B (E)	
TME4-08019	EL106	L-861T	OMNI	BLUE	L-867B (E)	
TME4-08020	EL106	L-861T	OMNI	BLUE	L-867B (E)	
TME4-08021	EL106	L-861T	OMNI	BLUE	L-867B (E)	
TME4-08022	EL106	L-861T	OMNI	BLUE	L-867B (E)	
TME4-08023	EL106	L-861T	OMNI	BLUE	L-867B (E)	
TME4-08024	EL106	L-861T	OMNI	BLUE	L-867B (E)	
TME4-08025	EL106	L-861T	OMNI	BLUE	L-867B (E)	
TME4-08026	EL106	L-861T	OMNI	BLUE	L-867B (E)	
TME4-08027	EL106	L-861T	OMNI	BLUE	L-867B (E)	
TME4-08028	EL106	L-861T	OMNI	BLUE	L-867B (E)	
TME4-08029	EL107	L-861T	OMNI	BLUE	L-867B (E)	
TME4-08030	EL107	L-861T	OMNI	BLUE	L-867B (E)	
TME4-08031	EL107	L-861T	OMNI	BLUE	L-867B (E)	
TME4-08032	EL107	L-861T	OMNI	BLUE	L-867B (E)	
TME4-08033	EL107	L-861T	OMNI	BLUE	L-867B (E)	
TME4-08034	EL107	L-861T	OMNI	BLUE	L-867B (E)	
TME4-08035	EL107	L-861T	OMNI	BLUE	L-867B (E)	
TME4-08036	EL107	L-861T	OMNI	BLUE	L-867B (E)	
TME4-08037	EL107	L-861T	OMNI	BLUE	L-867B (E)	
TME4-08038	EL107	L-861T	OMNI	BLUE	L-867B (E)	
TME4-08039	EL107	L-861T	OMNI	BLUE	L-867B (E)	
TME4-08040	EL108	L-861T	OMNI	BLUE	L-867B (E)	
TME4-08041	EL108	L-861T	OMNI	BLUE	L-867B (E)	
TME4-08042	EL108	COVER PLATE	N/A	N/A	L-867B (E)	
TME4-08043	EL108	L-861T	OMNI	BLUE	L-867B (N)	
TME4-08043A	EL108	COVER PLATE	N/A	N/A	L-867B (E)	
TME4-08044	EL109	L-861T	OMNI	BLUE	L-867B (N)	
TME4-08045	EL109	L-861T	OMNI	BLUE	L-867B (N)	
TME4-08046	EL109	L-861T	OMNI	BLUE	L-867B (N)	
TME4-08047	EL109	L-861T	OMNI	BLUE	L-867B (N)	
TME4-08048	EL109	L-861T	OMNI	BLUE	L-867B (N)	
TME4-08049	EL109	L-861T	OMNI	BLUE	L-867B (N)	
TME4-08050	EL109	L-861T	OMNI	BLUE	L-867B (N)	
TME4-08051	EL109	L-861T	OMNI	BLUE	L-867B (N)	
TME4-08052	EL109	L-861T	OMNI	BLUE	L-867B (N)	
TME4-08053	EL109	L-861T	OMNI	BLUE	L-867B (N)	
TME4-08054	EL109	L-861T	OMNI	BLUE	L-867B (N)	
TME4-08055	EL109	L-861T	OMNI	BLUE	L-867B (N)	
TME4-08056	EL109	L-861T	OMNI	BLUE	L-867B (N)	
TME4-08065	EL109	L-861T	OMNI	BLUE	L-867B (N)	
TME4-08066	EL109	L-861T	OMNI	BLUE	L-867B (N)	
TME4-08067	EL109	L-861T	OMNI	BLUE	L-867B (N)	
TME4-08068	EL109	L-861T	OMNI	BLUE	L-867B (N)	
TME4-08069	EL109	L-861T	OMNI	BLUE	L-867B (N)	
TME4-08070	EL109	L-861T	OMNI	BLUE	L-867B (N)	
TME4-08071	EL109	L-861T	OMNI	BLUE	L-867B (N)	
TME4-08072	EL109	L-861T	OMNI	BLUE	L-867B (N)	
TME4-08073	EL109	L-861T	OMNI	BLUE	L-867B (N)	
TME4-08086	EL109	L-861T	OMNI	BLUE	L-867B (E)	
TME4-08086A	EL109	COVER PLATE	N/A	N/A	L-867B (E)	
TME4-08074	EL110	L-861T	OMNI	BLUE	L-867B (N)	
TME4-08075	EL110	L-861T	OMNI	BLUE	L-867B (N)	
TME4-08087	EL110	L-861T	OMNI	BLUE	L-867B (E)	

MATCH LINE SEE SHEET RIGHT

FIXTURE ID	REF. DWG	FAA DESIGNATION	FIXTURE TYPE	LENS COLOR	BASE CAN	COMMENTS

MATCH LINE SEE SHEET LEFT

TME4-08088	EL110	L-861T	OMNI	BLUE	L-867B (E)	
TME4-08089	EL110	L-861T	OMNI	BLUE	L-867B (E)	
TME4-08090	EL110	L-861T	OMNI	BLUE	L-867B (E)	
TME4-08091	EL110	L-861T	OMNI	BLUE	L-867B (E)	
TME4-08092	EL110	L-861T	OMNI	BLUE	L-867B (E)	
TME4-08093	EL110	L-861T	OMNI	BLUE	L-867B (E)	
TME4-08094	EL110	L-861T	OMNI	BLUE	L-867B (E)	
TME4-08095	EL110	L-861T	OMNI	BLUE	L-867B (E)	
TME4-08096	EL110	L-861T	OMNI	BLUE	L-867B (E)	
TME4-08097	EL110	L-861T	OMNI	BLUE	L-867B (E)	
TME4-08098	EL111	L-861T	OMNI	BLUE	L-867B (E)	
TME4-08099	EL111	L-861T	OMNI	BLUE	L-867B (E)	
TME4-08100	EL111	L-861T	OMNI	BLUE	L-867B (E)	
TME4-08101	EL111	L-861T	OMNI	BLUE	L-867B (E)	
TME4-08102	EL111	L-861T	OMNI	BLUE	L-867B (E)	
TME4-08103	EL111	L-861T	OMNI	BLUE	L-867B (E)	
TME4-08104	EL111	L-861T	OMNI	BLUE	L-867B (E)	
TME4-08105	EL111	L-861T	OMNI	BLUE	L-867B (E)	
TME4-08113	EL111	L-861T	OMNI	BLUE	L-867B (E)	
TME4-08112	EL111	L-861T	OMNI	BLUE	L-867B (E)	
TME4-08111	EL111	L-861T	OMNI	BLUE	L-867B (E)	
TME4-08110	EL111	L-861T	OMNI	BLUE	L-867B (E)	
TME4-08109	EL111	L-861T	OMNI	BLUE	L-867B (E)	
TME4-08108	EL111	L-861T	OMNI	BLUE	L-867B (E)	
TME4-08107	EL111	L-861T	OMNI	BLUE	L-867B (E)	
TME4-08106	EL111	L-861T	OMNI	BLUE	L-867B (E)	
TME4-08125	EL113	L-861T	OMNI	BLUE	L-867B (E)	
TME4-08126	EL113	L-861T	OMNI	BLUE	L-867B (E)	
TME4-08127	EL113	L-861T	OMNI	BLUE	L-867B (E)	
TME4-08128	EL113	L-861T	OMNI	BLUE	L-867B (E)	
TME4-08129	EL113	L-861T	OMNI	BLUE	L-867B (E)	
TME4-08130	EL113	L-861T	OMNI	BLUE	L-867B (E)	
TME4-08131	EL113	L-861T	OMNI	BLUE	L-867B (E)	
TME4-08132	EL113	L-861T	OMNI	BLUE	L-867B (E)	
TME4-08133	EL113	L-861T	OMNI	BLUE	L-867B (E)	
TME4-08134	EL113	L-861T	OMNI	BLUE	L-867B (E)	
TME4-08135	EL113	L-861T	OMNI	BLUE	L-867B (E)	
TME4-08136	EL114	L-861T	OMNI	BLUE	L-867B (E)	
TME4-08137	EL114	L-861T	OMNI	BLUE	L-867B (E)	
TME4-08138	EL114	L-861T	OMNI	BLUE	L-867B (E)	
TME4-08139	EL114	L-861T	OMNI	BLUE	L-867B (E)	
TME4-08140	EL114	L-861T	OMNI	BLUE	L-867B (E)	
TME4-08141	EL114	L-861T	OMNI	BLUE	L-867B (E)	
TME4-08142	EL114	L-861T	OMNI	BLUE	L-867B (E)	
TME4-08143	EL114	L-861T	OMNI	BLUE	L-867B (E)	
TME4-08144	EL114	L-861T	OMNI	BLUE	L-867B (E)	
TME4-08145	EL114	L-861T	OMNI	BLUE	L-867B (E)	
TME4-08146	EL114	L-861T	OMNI	BLUE	L-867B (E)	
TME4-08147	EL114	L-861T	OMNI	BLUE	L-867B (E)	
TME4-08148	EL114	L-861T	OMNI	BLUE	L-867B (E)	
TME4-08149	EL114	L-861T	OMNI	BLUE	L-867B (E)	
TME4-08150	EL114	L-861T	OMNI	BLUE	L-867B (E)	
TME4-08151	EL114	L-861T	OMNI	BLUE	L-867B (E)	
TME4-08152	EL114	L-861T	OMNI	BLUE	L-867B (E)	
TME4-08153	EL114	L-861T	OMNI	BLUE	L-867B (E)	
TME4-08154	EL114	L-861T	OMNI	BLUE	L-867B (E)	
TME4-08155	EL114	L-861T	OMNI	BLUE	L-867B (E)	
TME4-08156	EL114	L-861T	OMNI	BLUE	L-867B (E)	
TME4-08157	EL114	L-861T	OMNI	BLUE	L-867B (E)	
TME4-08158	EL114	L-861T	OMNI	BLUE	L-867B (E)	
TME4-08159	EL114	L-861T	OMNI	BLUE	L-867B (E)	
TME4-08160	EL114	L-861T	OMNI	BLUE	L-867B (E)	
TME4-08161	EL114	L-861T	OMNI	BLUE	L-867B (E)	
TME4-08162	EL114	L-861T	OMNI	BLUE	L-867B (E)	

NOTES:

1. SEE SHEETS E-001 FOR GENERAL ELECTRICAL NOTES.

SHEET NOTES:

1. FOR (N) BASE CANS ON TWY M6 REFER TO EL900 SERIES. FOR ALL OTHER (N) BASE CANS CONTRACTOR MUST SURVEY (E) BASE CAN LOCATION AND INSTALL (N) BASE CAN AT SAME LOCATION AND ORIENTATION AND ALIGNMENT.
2. ALL LIGHTS MUST BE NEW AND LED U.O.N.
3. FOR ALL LIGHT FIXTURES (NEW AND REINSTALLED), FURNISH AND INSTALL CONNECTORS, SPACER RINGS, FLANGE RING, WITH PAVEMENT DAM, BOLTS, AND WASHERS.
4. FOR NEW LIGHTS, FURNISH AND INSTALL NEW TRANSFORMER SIZE PER MFG. RECOMMENDATIONS. SUPPLY WITH 6.6A PRIMARY/ 6.6A SECONDARY.
5. FOR EXISTING LIGHTS TO BE REMOVED AND REINSTALLED REFER TO SCHEDULE BELOW:

LIGHT TYPE	XFMR TYPE
TWY CTL UNIDIRECTIONAL (LED)	30/45

6. RECORD NUMBER AND DEPTH OF SPACERS.
7. L-868B BASE CAN HEIGHT SHALL BE 22" U.O.N. ON AREA PLANS.
8. L-867B BASE CAN HEIGHT SHALL BE 22" U.O.N. ON AREA PLANS.

ABBREVIATIONS:

BIDIREC. – BIDIRECTIONAL
OMNI – OMNIDIRECTIONAL
UNIDIREC. – UNIDIRECTIONAL
EXT – EXTENSION
(L) – LED (UNLESS OTHERWISE NOTED)
MFG. – MANUFACTURER
(RR) – REMOVE AND REINSTALL
(E) – EXISTING TO BE REUSED
(N) – NEW
N/A – NOT APPLICABLE

COLORADO LICENSED
GORON LEA
52246
2/15/19
PROFESSIONAL ENGINEER

CITY & COUNTY of DENVER

DENVER INTERNATIONAL AIRPORT

LEAN ENGINEERING

RUNWAY 17R-35L COMPLEX PAVEMENT REHABILITATION PACKAGE 1

ISSUE RECORD

NO.	BY	PURPOSE	DATE	CKD
1	LE	50% DESIGN	09/14/18	DL
2	LE	90% DESIGN	10/26/18	DL
3	LE	BID	12/26/18	DL
4	LE	ADDENDUM 2	1/17/19	DL
5	LE	CONSTRUCTION	2/15/19	DL

SCALE: AS INDICATED
DATE: FEBRUARY 15, 2019
DRAWN BY: KV
CHECKED BY: JA
FAA AIP NO:
WORK BREAKDOWN NO.
DESIGN CONTRACT NO. 201735882
CONST. CONTRACT NO. 201846271
VOLUME NO.
SHEET TITLE: FIXTURE SCHEDULE CIRCUIT TME4
SHEET NO. EL872
359 OF 396
CADD FILE NO. _201735882-B1EELD-6334

D:\dropbox (lean photometrics)\active projects\157180 ia rah den 17r-35l reconstruction\01 drawings\working drawings\sheets_201735882-B1EELD-6334.dwg Feb 13, 2019 - 4:26pm Kat

FIXTURE ID	REF. DW	FAA DESIGNATION	FIXTURE TY	LENS COLOR	BASE CAN	COMMENTS
TPE1-07256	EL103	L-861T	OMNI	BLUE	L-867B (E)	
TPE1-07257	EL103	L-861T	OMNI	BLUE	L-867B (E)	
TPE1-07258	EL103	L-861T	OMNI	BLUE	L-867B (E)	
TPE1-07259	EL103	L-861T	OMNI	BLUE	L-867B (E)	
TPE1-07255	EL103	L-861T	OMNI	BLUE	L-867B (E)	
TPE1-07254	EL103	L-861T	OMNI	BLUE	L-867B (E)	
TPE1-07253	EL103	L-861T	OMNI	BLUE	L-867B (E)	
TPE1-07252	EL103	L-861T	OMNI	BLUE	L-867B (E)	
TPE1-07260	EL115	L-861T	OMNI	BLUE	L-867B (E)	
TPE1-07261	EL115	L-861T	OMNI	BLUE	L-867B (E)	
TPE1-07251	EL115	L-861T	OMNI	BLUE	L-867B (E)	
TPE1-07252	EL115	L-861T	OMNI	BLUE	L-867B (E)	

NOTES:

1. SEE SHEETS E-001 FOR GENERAL ELECTRICAL NOTES.

SHEET NOTES:

1. FOR (N) BASE CANS ON TWY M6 REFER TO EL900 SERIES. FOR ALL OTHER (N) BASE CANS CONTRACTOR MUST SURVEY (E) BASE CAN LOCATION AND INSTALL (N) BASE CAN AT SAME LOCATION AND ORIENTATION AND ALIGNMENT.
2. ALL LIGHTS MUST BE NEW AND LED U.O.N.
3. FOR ALL LIGHT FIXTURES (NEW AND REINSTALLED), FURNISH AND INSTALL CONNECTORS, SPACER RINGS, FLANGE RING, WITH PAVEMENT DAM, BOLTS, AND WASHERS.
4. FOR NEW LIGHTS, FURNISH AND INSTALL NEW TRANSFORMER SIZE PER MFG. RECOMMENDATIONS. SUPPLY WITH 6.6A PRIMARY/ 6.6A SECONDARY.
5. FOR EXISTING LIGHTS TO BE REMOVED AND REINSTALLED REFER TO SCHEDULE BELOW:

LIGHT TYPE	XFMR TYPE
TWY CTL UNIDIRECTIONAL (LED)	30/45

6. RECORD NUMBER AND DEPTH OF SPACERS.
7. L-868B BASE CAN HEIGHT SHALL BE 22" U.O.N. ON AREA PLANS.
8. L-867B BASE CAN HEIGHT SHALL BE 22" U.O.N. ON AREA PLANS.

ABBREVIATIONS:

BIDIREC. – BIDIRECTIONAL
OMNI – OMNIDIRECTIONAL
UNIDIREC. – UNIDIRECTIONAL
EXT – EXTENSION
(L) – LED (UNLESS OTHERWISE NOTED)
MFG. – MANUFACTURER
(RR) – REMOVE AND REINSTALL
(E) – EXISTING TO BE REUSED
(N) – NEW
N/A – NOT APPLICABLE

COLORADO LICENSED
GORON LEA
52246
2/15/19
PROFESSIONAL ENGINEER

CITY & COUNTY of DENVER

DENVER INTERNATIONAL AIRPORT

LEAN ENGINEERING

RUNWAY 17R-35L COMPLEX PAVEMENT REHABILITATION PACKAGE 1

ISSUE RECORD

NO.	BY	PURPOSE	DATE	CKD
1	LE	50% DESIGN	09/14/18	DL
2	LE	90% DESIGN	10/26/18	DL
3	LE	BID	12/26/18	DL
4	LE	CONSTRUCTION	2/15/19	DL

SCALE AS INDICATED
DATE FEBRUARY 15, 2019
DRAWN BY: KV
CHECKED BY: JA
FAA AIP NO:
WORK BREAKDOWN NO.
DESIGN CONTRACT NO. 201735882
CONST. CONTRACT NO. 201846271
VOLUME NO.
SHEET TITLE
FIXTURE SCHEDULE CIRCUIT TPE1
SHEET NO. EL873
360 OF 396
CADD FILE NO. _201735882-B1EELD-6334

D:\dropbox (lean photometrics)\active projects\1571801a rah den 17-35l reconstruction\01 drawings\working drawings\sheets_201735882-B1EELD-6334.dwg Feb 12, 2019 - 5:34pm Kat

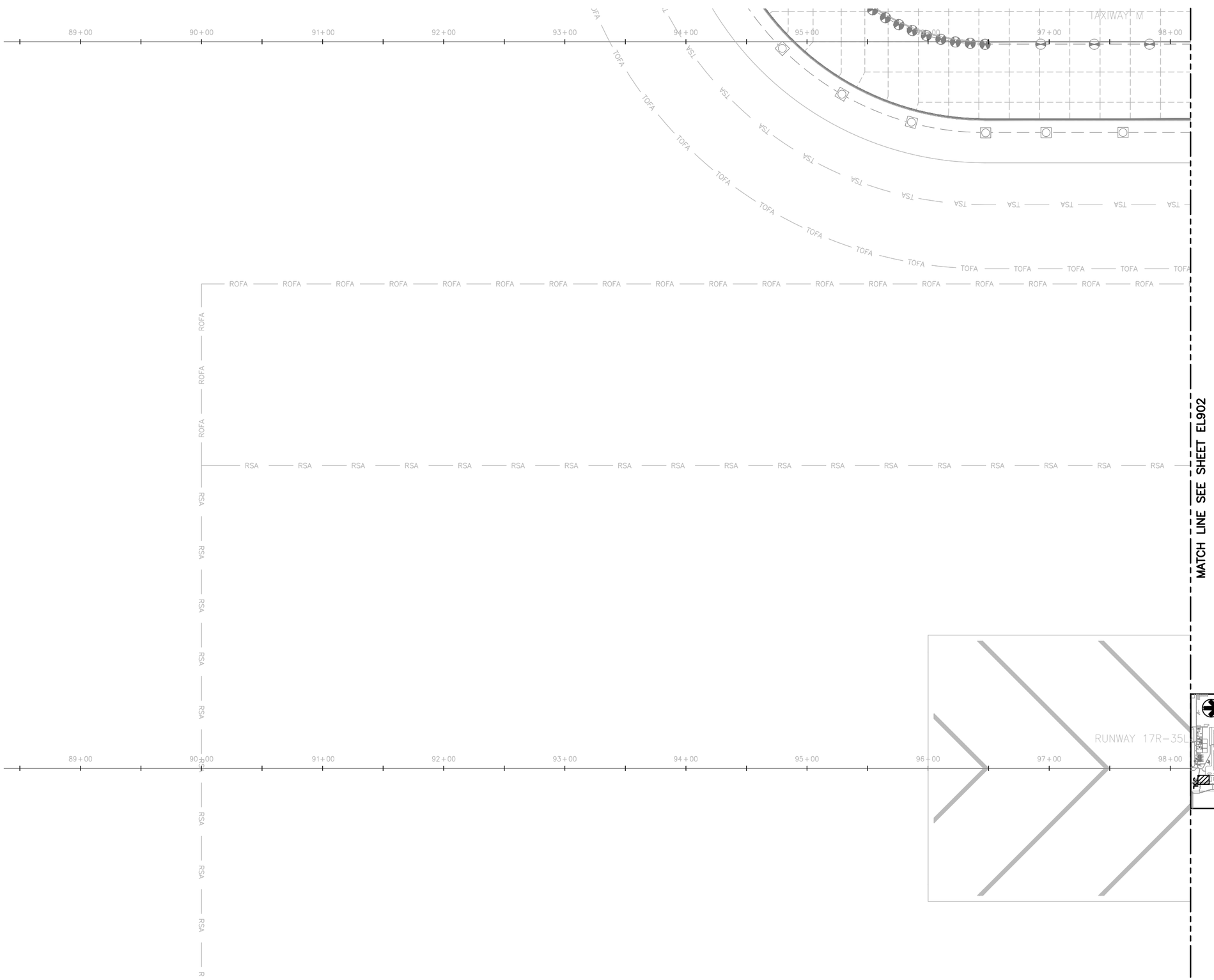

NOTES:

1. THIS SHEET IS FOR INFORMATIONAL PURPOSES ONLY. NO WORK IS REQUIRED.

COLORADO LICENSED
BARON LEA
52246
2/15/19
PROFESSIONAL ENGINEER

CITY & COUNTY of DENVER

DENVER INTERNATIONAL AIRPORT

LEAN ENGINEERING

RUNWAY 17R-35L COMPLEX PAVEMENT REHABILITATION PACKAGE 1

ISSUE RECORD

NO.	BY	PURPOSE	DATE	CKD
1	LE	50% DESIGN	09/14/18	DL
2	LE	90% DESIGN	10/26/18	DL
3	LE	BID	12/26/18	DL
4	LE	CONSTRUCTION	2/15/19	DL

SCALE: AS INDICATED

DATE: FEBRUARY 15, 2019

DRAWN BY: KV

CHECKED BY: JA

FAA AIP NO:

WORK BREAKDOWN NO.

DESIGN CONTRACT NO. 201735882

CONST. CONTRACT NO. 201846271

VOLUME NO.

SHEET TITLE: BASE CAN COORDINATE PLAN (1 OF 17)

SHEET NO. EL901

361 OF 396

CADD FILE NO. _201735882-B1EELP-1356

D:\dropbox (lean photometrics)\active projects\1571801a rah den 17r-35l reconstruction\01 drawings\working drawings\Sheets_201735882-B1EELP-1356.dwg Feb 12, 2019 - 5:34pm Kat

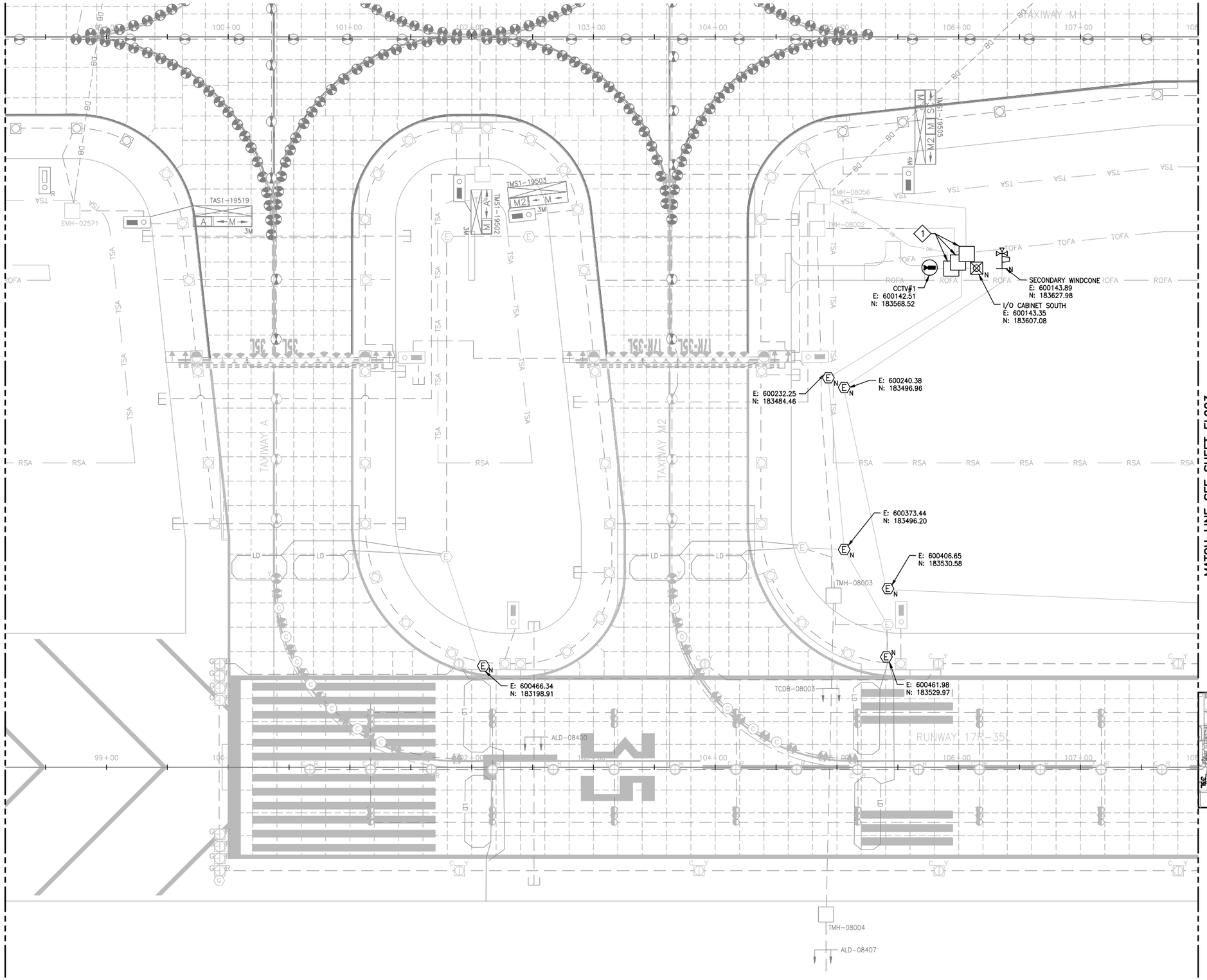

NOTES:

1. SEE SHEETS E-001 FOR GENERAL ELECTRICAL NOTES.
2. THESE DRAWINGS PROVIDE (N) COORDINATES FOR (N) BASE CANS ON T/W M6, (N) HANDHOLES, & OTHER ELECTRICAL STRUCTURES.
3. FOR BASE CANS BEING INSTALLED IN (N) PANELS OTHER THAN M6 & NOT SHOWN HERE CONTRACTOR SHALL SURVEY EXISTING BASE CAN LOCATION PRIOR TO CONCRETE PANEL DEMOLITION. INSTALL (N) BASE CANS IN SAME LOCATION.

KEY NOTES:

1. NEW HANDHOLE LOCATION MUST BE FIELD VERIFIED AND APPROVED BY AIRPORT ENGINEER.

COLORADO LICENSED
DARON LEA
52246
2/15/19
PROFESSIONAL ENGINEER

CITY & COUNTY of DENVER

DENVER INTERNATIONAL AIRPORT

LEAN ENGINEERING

RUNWAY 17R-35L COMPLEX PAVEMENT REHABILITATION PACKAGE 1

ISSUE RECORD

NO.	BY	PURPOSE	DATE	CKD
1	LE	50% DESIGN	09/14/18	DL
2	LE	90% DESIGN	10/26/18	DL
3	LE	BID	12/26/18	DL
4	LE	CONSTRUCTION	2/15/19	DL

SCALE: AS INDICATED

DATE: FEBRUARY 15, 2019

DRAWN BY: KV

CHECKED BY: JA

FAA AIP NO:

WORK BREAKDOWN NO.

DESIGN CONTRACT NO. 201735882

CONST. CONTRACT NO. 201846271

VOLUME NO.

SHEET TITLE: BASE CAN COORDINATE PLAN (2 OF 17)

SHEET NO. EL902

362 OF 396

CADD FILE NO. _201735882-B1EELP-1356

D:\dropbox (lean photometrics)\active projects\15718011a rah den 17r-35l reconstruction\01 drawings\working drawings\Sheets_201735882-B1EELP-1356.dwg Feb 12, 2019 - 5:35pm Kat

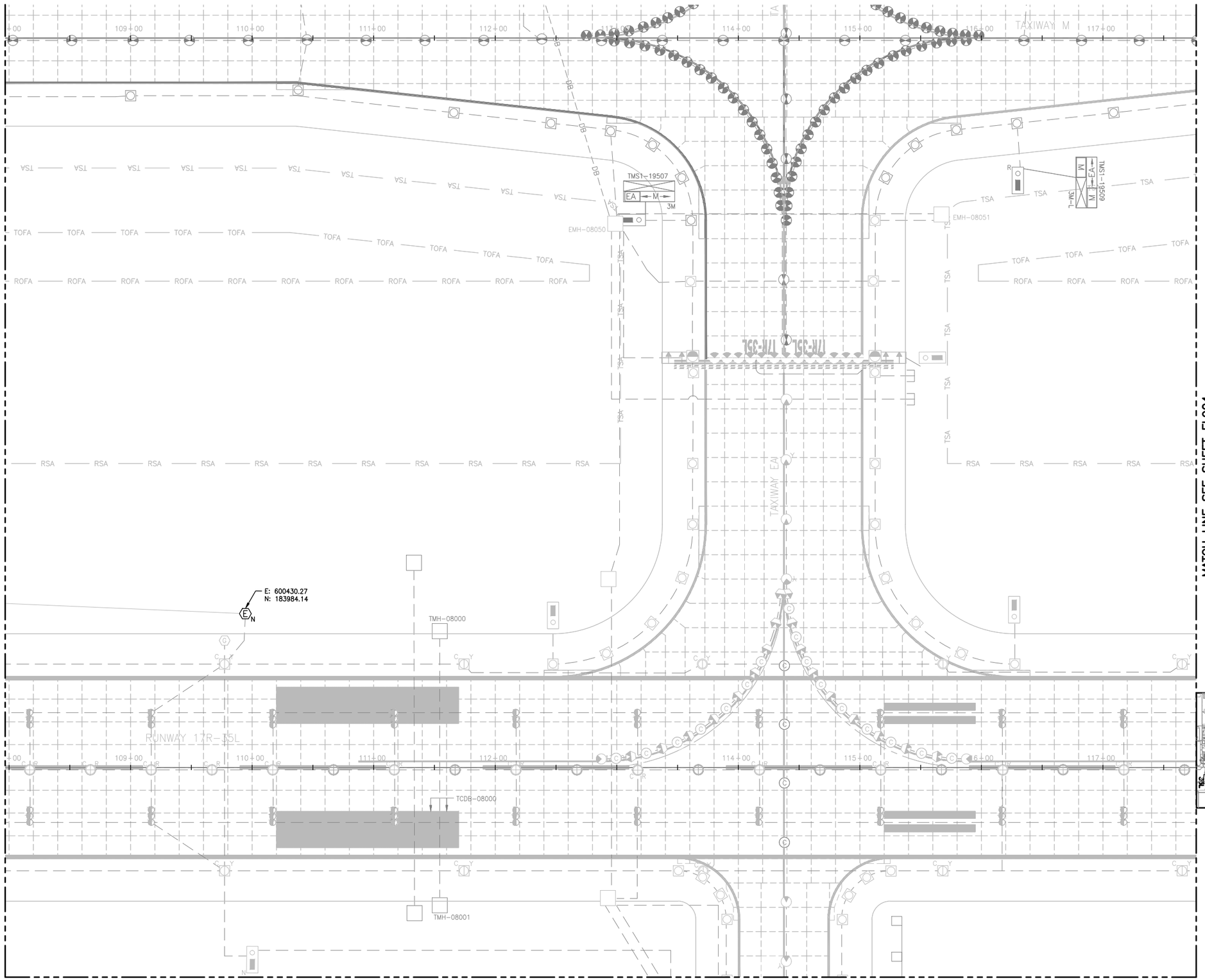

NOTES:

1. SEE SHEETS E-001 FOR GENERAL ELECTRICAL NOTES.
2. THESE DRAWINGS PROVIDE (N) COORDINATES FOR (N) BASE CANS ON T/W M6, (N) HANDHOLES, & OTHER ELECTRICAL STRUCTURES.
3. FOR BASE CANS BEING INSTALLED IN (N) PANELS OTHER THAN M6 & NOT SHOWN HERE CONTRACTOR SHALL SURVEY EXISTING BASE CAN LOCATION PRIOR TO CONCRETE PANEL DEMOLITION. INSTALL (N) BASE CANS IN SAME LOCATION.

NORTH

40' 20' 0 40'

KEY PLAN

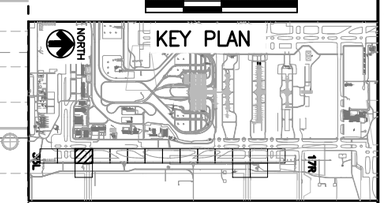

COLORADO LICENSED
DORON LEAN
52246
2/15/19
PROFESSIONAL ENGINEER

CITY & COUNTY of DENVER

DENVER INTERNATIONAL AIRPORT

LEAN ENGINEERING

RUNWAY 17R-35L COMPLEX PAVEMENT REHABILITATION PACKAGE 1

ISSUE RECORD

NO.	BY	PURPOSE	DATE	CKD
1	LE	50% DESIGN	09/14/18	DL
2	LE	90% DESIGN	10/26/18	DL
3	LE	BID	12/26/18	DL
4	LE	CONSTRUCTION	2/15/19	DL

SCALE: AS INDICATED

DATE: FEBRUARY 15, 2019

DRAWN BY: KV

CHECKED BY: JA

FAA AIP NO:

WORK BREAKDOWN NO.

DESIGN CONTRACT NO. 201735882

CONST. CONTRACT NO. 201846271

VOLUME NO.

SHEET TITLE

BASE CAN COORDINATE PLAN (3 OF 17)

SHEET NO. EL903

363 OF 396

CADD FILE NO. _201735882-B1EELP-1356

D:\dropbox (lean photometrics)\active projects\15718010 rah den 17r-35l reconstruction\01 drawings\working drawings\Sheets_201735882-B1EELP-1356.dwg Feb 12, 2019 - 5:35pm Kat

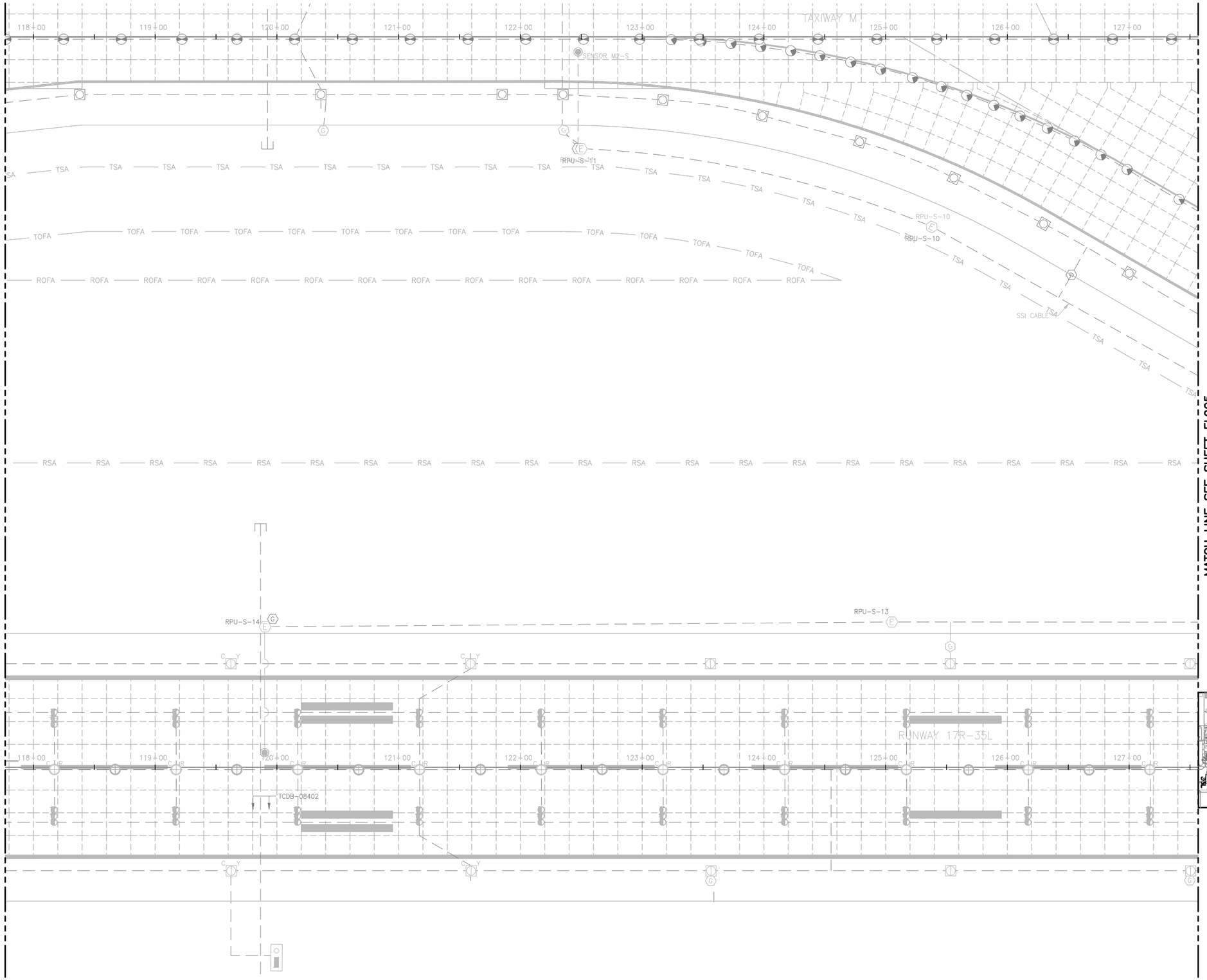

NOTES:

1. THIS SHEET IS FOR INFORMATIONAL PURPOSES ONLY. NO WORK IS REQUIRED.

NORTH

40' 20' 0 40'

KEY PLAN

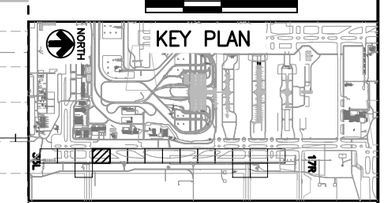

COLORADO LICENSED
DORON LEAN
52246
2/15/19
PROFESSIONAL ENGINEER

CITY & COUNTY of DENVER

DENVER INTERNATIONAL AIRPORT

LEAN ENGINEERING

RUNWAY 17R-35L COMPLEX PAVEMENT REHABILITATION PACKAGE 1

ISSUE RECORD

NO.	BY	PURPOSE	DATE	CKD
1	LE	50% DESIGN	09/14/18	DL
2	LE	90% DESIGN	10/26/18	DL
3	LE	BID	12/26/18	DL
4	LE	CONSTRUCTION	2/15/19	DL

SCALE: AS INDICATED

DATE: FEBRUARY 15, 2019

DRAWN BY: KV

CHECKED BY: JA

FAA AIP NO:

WORK BREAKDOWN NO.

DESIGN CONTRACT NO. 201735882

CONST. CONTRACT NO. 201846271

VOLUME NO.

SHEET TITLE

BASE CAN COORDINATE PLAN (4 OF 17)

SHEET NO. EL904

364 OF 396

CADD FILE NO. _201735882-B1EELP-1356

Feb 12, 2019 – 5:35pm Kat

D:\dropbox (lean photometrics)\active projects\1571801a rah den 17r-35l reconstruction\01 drawings\working drawings\Sheets_201735882-B1EELP-1356.dwg

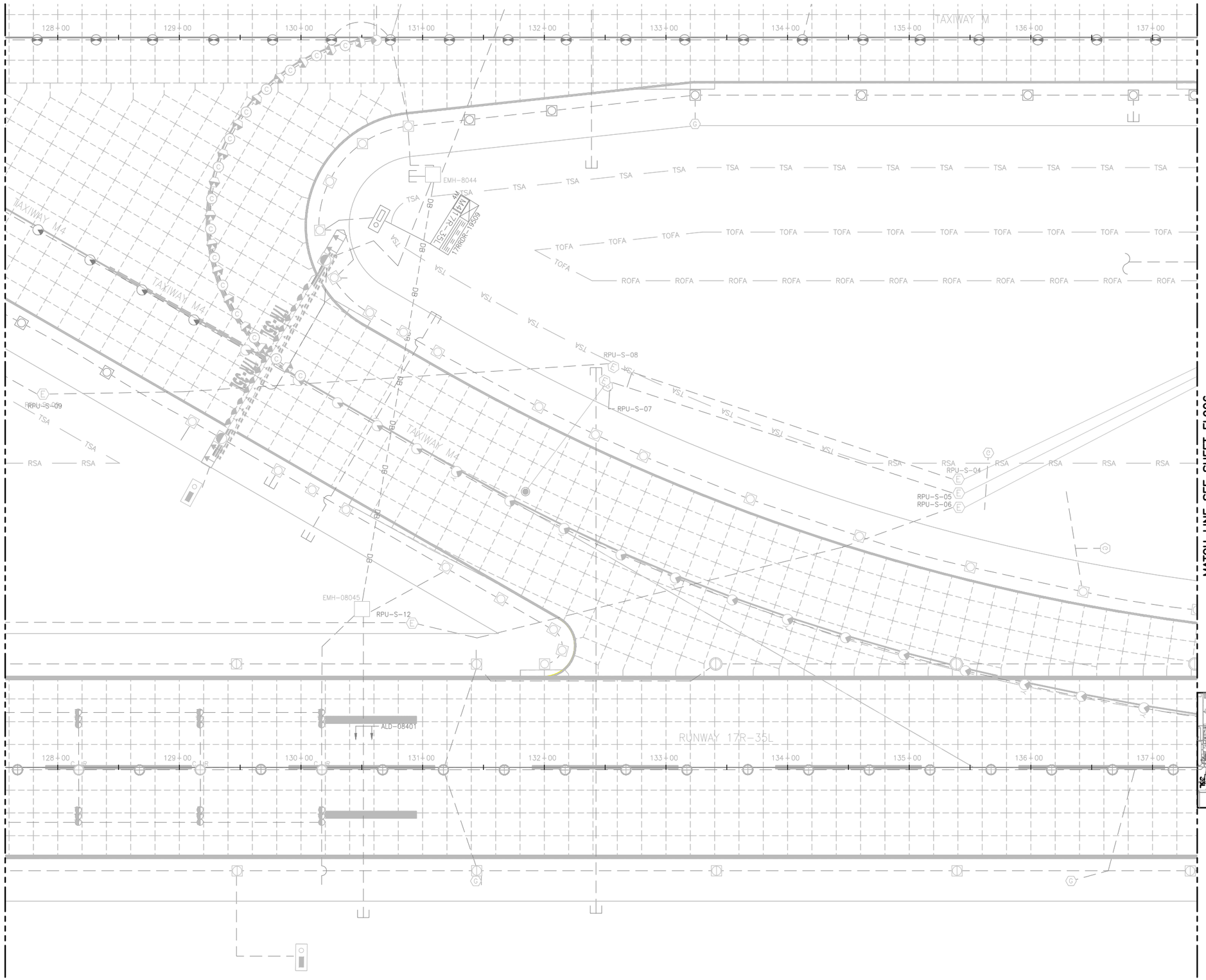

NOTES:

1. THIS SHEET IS FOR INFORMATIONAL PURPOSES ONLY. NO WORK IS REQUIRED.

KEY PLAN

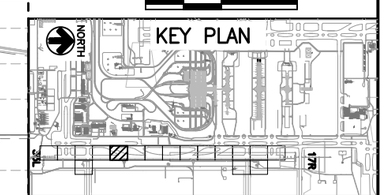

COLORADO LICENSED
BARON LEA
52246
2/15/19
PROFESSIONAL ENGINEER

CITY & COUNTY of DENVER

DENVER INTERNATIONAL AIRPORT

LEAN ENGINEERING

RUNWAY 17R-35L COMPLEX PAVEMENT REHABILITATION PACKAGE 1

ISSUE RECORD

NO.	BY	PURPOSE	DATE	CKD
1	LE	50% DESIGN	09/14/18	DL
2	LE	90% DESIGN	10/26/18	DL
3	LE	BID	12/26/18	DL
4	LE	CONSTRUCTION	2/15/19	DL

SCALE: AS INDICATED

DATE: FEBRUARY 15, 2019

DRAWN BY: KV

CHECKED BY: JA

FAA AIP NO:

WORK BREAKDOWN NO.

DESIGN CONTRACT NO. 201735882

CONST. CONTRACT NO. 201846271

VOLUME NO.

SHEET TITLE: BASE CAN COORDINATE PLAN (5 OF 17)

SHEET NO. EL905

365 OF 396

CADD FILE NO. _201735882-B1EELP-1356

D:\dropbox (lean photometrics)\active projects\1571801a rah den 17r-35l reconstruction\01 drawings\working drawings\Sheets_201735882-B1EELP-1356.dwg Feb 12, 2019 - 5:35pm Kat

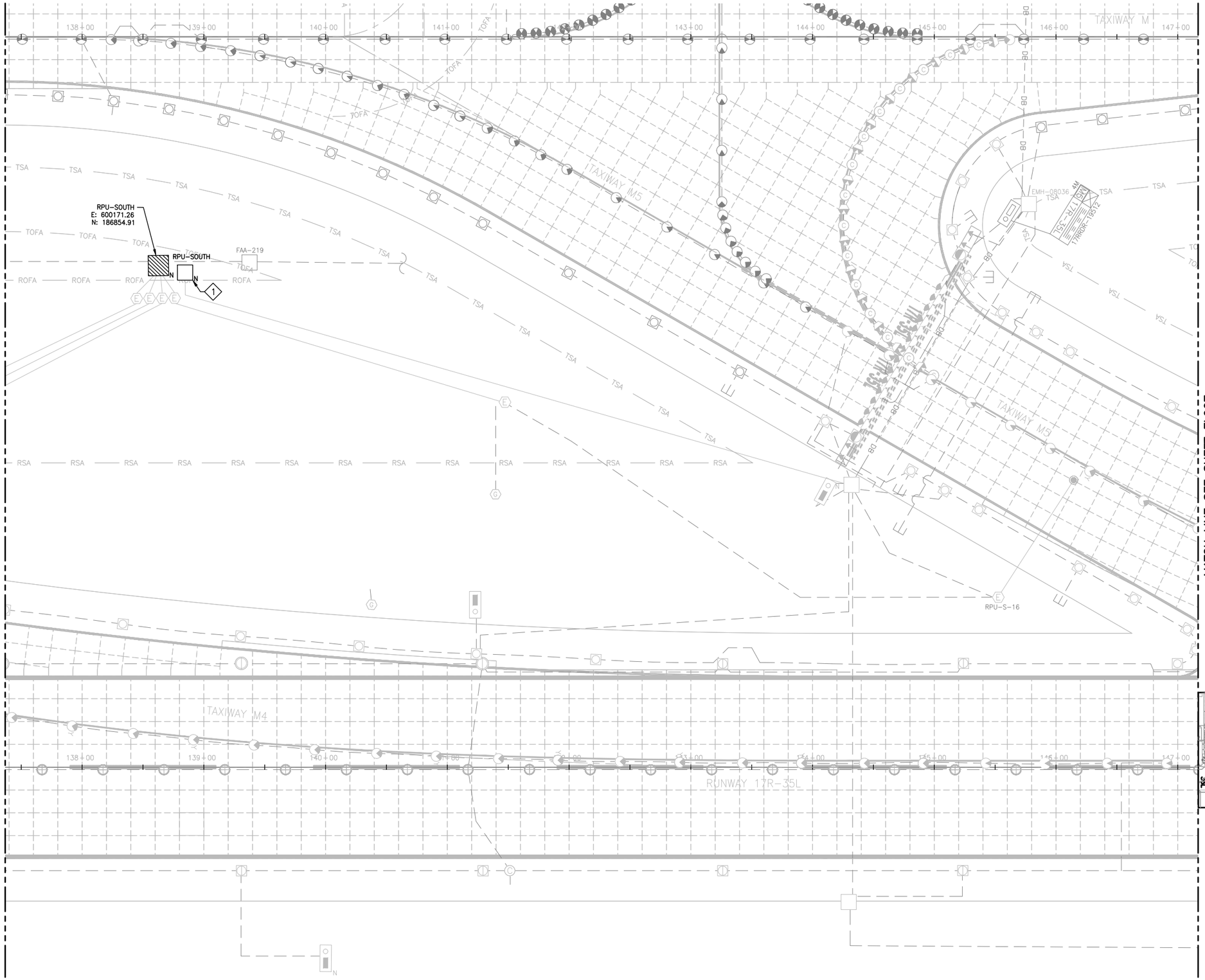

NOTES:

1. SEE SHEETS E-001 FOR GENERAL ELECTRICAL NOTES.
2. THESE DRAWINGS PROVIDE (N) COORDINATES FOR (N) BASE CANS ON T/W M6, (N) HANDHOLES, & OTHER ELECTRICAL STRUCTURES.
3. FOR BASE CANS BEING INSTALLED IN (N) PANELS OTHER THAN M6 & NOT SHOWN HERE CONTRACTOR SHALL SURVEY EXISTING BASE CAN LOCATION PRIOR TO CONCRETE PANEL DEMOLITION. INSTALL (N) BASE CANS IN SAME LOCATION.

KEY NOTES:

1. NEW HANDHOLE LOCATION MUST BE FIELD VERIFIED AND APPROVED BY AIRPORT ENGINEER.

COLORADO LICENSED
BARON LEA
52246
2/15/19
PROFESSIONAL ENGINEER

CITY & COUNTY of DENVER

DENVER INTERNATIONAL AIRPORT

LEAN ENGINEERING

RUNWAY 17R-35L COMPLEX PAVEMENT REHABILITATION PACKAGE 1

ISSUE RECORD

NO.	BY	PURPOSE	DATE	CKD
1	LE	50% DESIGN	09/14/18	DL
2	LE	90% DESIGN	10/26/18	DL
3	LE	BID	12/26/18	DL
4	LE	CONSTRUCTION	2/15/19	DL

SCALE: AS INDICATED

DATE: FEBRUARY 15, 2019

DRAWN BY: KV

CHECKED BY: JA

FAA AIP NO:

WORK BREAKDOWN NO.

DESIGN CONTRACT NO. 201735882

CONST. CONTRACT NO. 201846271

VOLUME NO.

SHEET TITLE

BASE CAN COORDINATE PLAN (6 OF 17)

SHEET NO. EL906

366 OF 396

CADD FILE NO. _201735882-B1EELP-1356

D:\dropbox (lean photometrics)\active projects\1571801a rah den 17r-35l reconstruction\01 drawings\working drawings\Sheets_201735882-B1EELP-1356.dwg Feb 12, 2019 - 5:36pm Kat

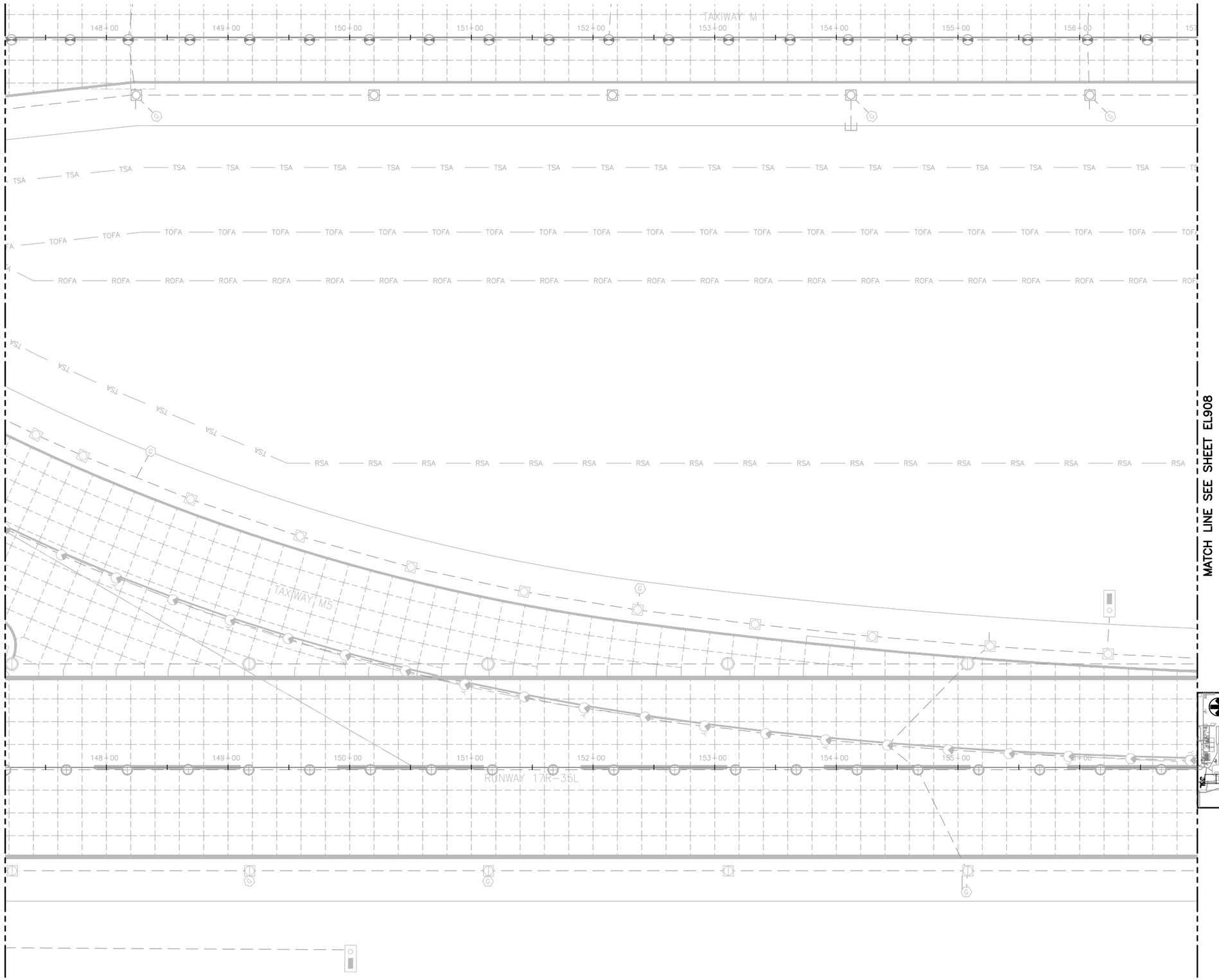

NOTES:

1. THIS SHEET IS FOR INFORMATIONAL PURPOSES ONLY. NO WORK IS REQUIRED.

COLORADO LICENSED
AARON LEAN
52246
2/15/19
PROFESSIONAL ENGINEER

CITY & COUNTY of DENVER

DENVER INTERNATIONAL AIRPORT

LEAN ENGINEERING

RUNWAY 17R-35L COMPLEX PAVEMENT REHABILITATION PACKAGE 1

ISSUE RECORD

NO.	BY	PURPOSE	DATE	CKD
1	LE	50% DESIGN	09/14/18	DL
2	LE	90% DESIGN	10/26/18	DL
3	LE	BID	12/26/18	DL
4	LE	CONSTRUCTION	2/15/19	DL

SCALE: AS INDICATED

DATE: FEBRUARY 15, 2019

DRAWN BY: KV

CHECKED BY: JA

FAA AIP NO:

WORK BREAKDOWN NO.

DESIGN CONTRACT NO. 201735882

CONST. CONTRACT NO. 201846271

VOLUME NO.

SHEET TITLE: BASE CAN COORDINATE PLAN (7 OF 17)

SHEET NO. EL907

367 OF 396

CADD FILE NO. _201735882-B1EELP-1356

D:\dropbox (lean photometrics)\active projects\1571801a rah den 17r-35l reconstruction\01 drawings\working drawings\Sheets_201735882-B1EELP-1356.dwg Feb 12, 2019 - 5:36pm Kat

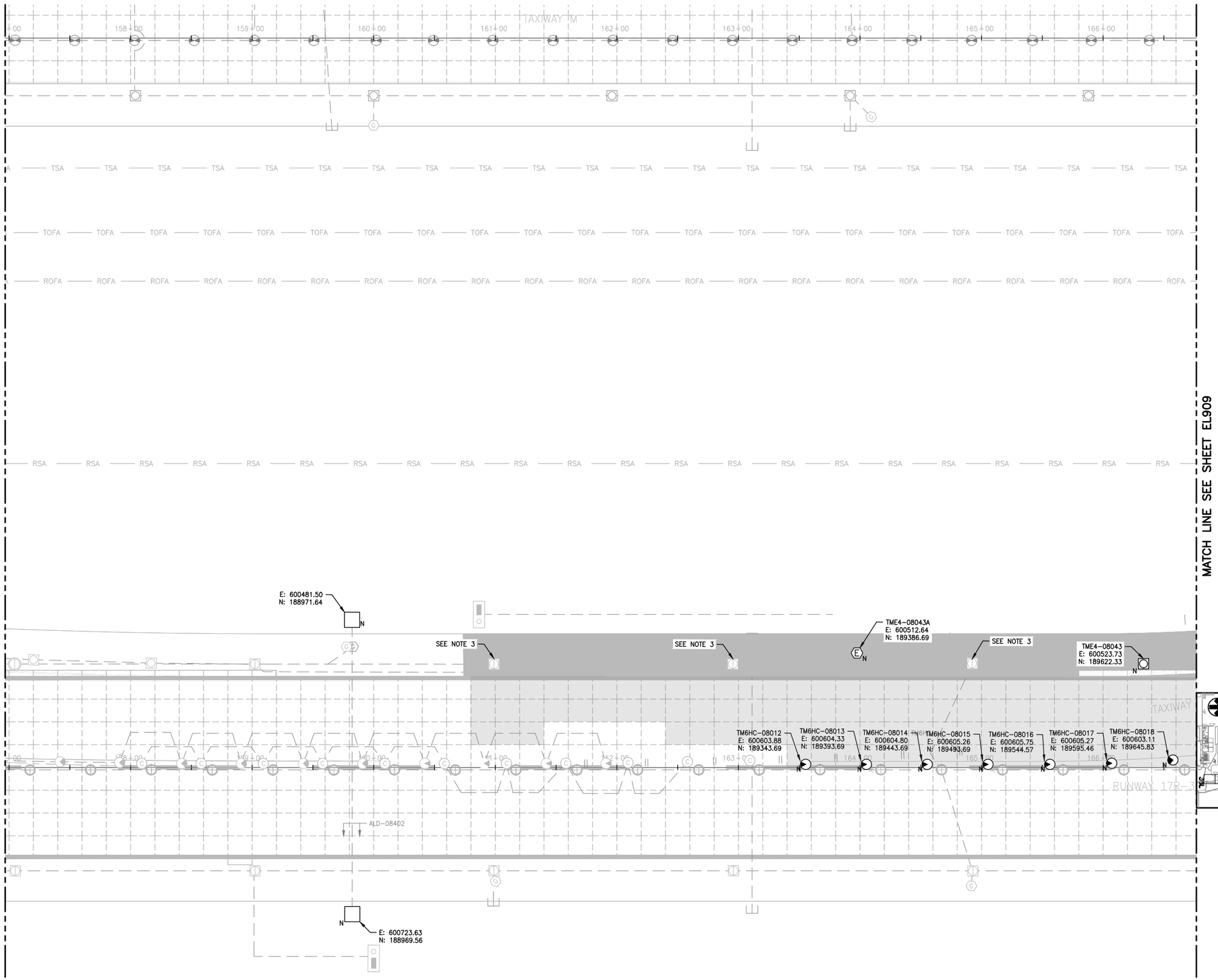

NOTES:

1. SEE SHEETS E-001 FOR GENERAL ELECTRICAL NOTES.
2. THESE DRAWINGS PROVIDE (N) COORDINATES FOR (N) BASE CANS ON T/W M6, (N) HANDHOLES, & OTHER ELECTRICAL STRUCTURES.
3. FOR BASE CANS BEING INSTALLED IN (N) PANELS OTHER THAN M6 & NOT SHOWN HERE CONTRACTOR SHALL SURVEY EXISTING BASE CAN LOCATION PRIOR TO CONCRETE PANEL DEMOLITION. INSTALL (N) BASE CANS IN SAME LOCATION.

NORTH

40' 20' 0 40'

KEY PLAN

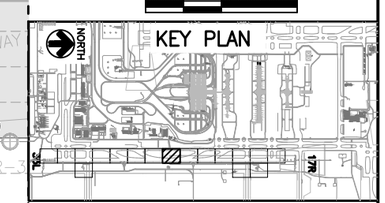

COLORADO LICENSED
BARON LEA
52246
2/15/19
PROFESSIONAL ENGINEER

CITY & COUNTY of DENVER

DENVER INTERNATIONAL AIRPORT

LEAN ENGINEERING

RUNWAY 17R-35L COMPLEX PAVEMENT REHABILITATION PACKAGE 1

ISSUE RECORD

NO.	BY	PURPOSE	DATE	CKD
1	LE	50% DESIGN	09/14/18	DL
2	LE	90% DESIGN	10/26/18	DL
3	LE	BID	12/26/18	DL
4	LE	CONSTRUCTION	2/15/19	DL

SCALE: AS INDICATED

DATE: FEBRUARY 15, 2019

DRAWN BY: KV

CHECKED BY: JA

FAA AIP NO:

WORK BREAKDOWN NO.

DESIGN CONTRACT NO. 201735882

CONST. CONTRACT NO. 201846271

VOLUME NO.

SHEET TITLE

BASE CAN COORDINATE PLAN (8 OF 17)

SHEET NO. EL908

368 OF 396

CADD FILE NO. _201735882-B1EELP-1356

D:\dropbox (lean photometrics)\active projects\15718011 rah den 17r-35l reconstruction\01 drawings\working drawings\Sheets_201735882-B1EELP-1356.dwg Feb 12, 2019 - 5:36pm Kat

TAXIWAY M6 GUARD BAR COORDINATES	
FIXTURE ID	COORDINATE
TM6SB1-08001	E: 600199.65 N: 190474.05
TM6SB1-08002	E: 600218.15 N: 190484.77
TM6SB1-08003	E: 600226.31 N: 190489.38
TM6SB1-08004	E: 600234.47 N: 190493.99
TM6SB1-08005	E: 600242.63 N: 190498.60
TM6SB1-08006	E: 600250.80 N: 190503.22
TM6SB1-08007	E: 600258.96 N: 190507.83
TM6SB1-08008	E: 600267.12 N: 190512.44
TM6SB1-08009	E: 600275.28 N: 190517.05
TM6SB1-08010	E: 600283.46 N: 190521.67
TM6SB1-08011	E: 600291.61 N: 190526.28
TM6SB1-08012	E: 600299.77 N: 190530.89
TM6SB1-08013	E: 600307.93 N: 190535.50
TM6SB1-08014	E: 600322.72 N: 190543.63

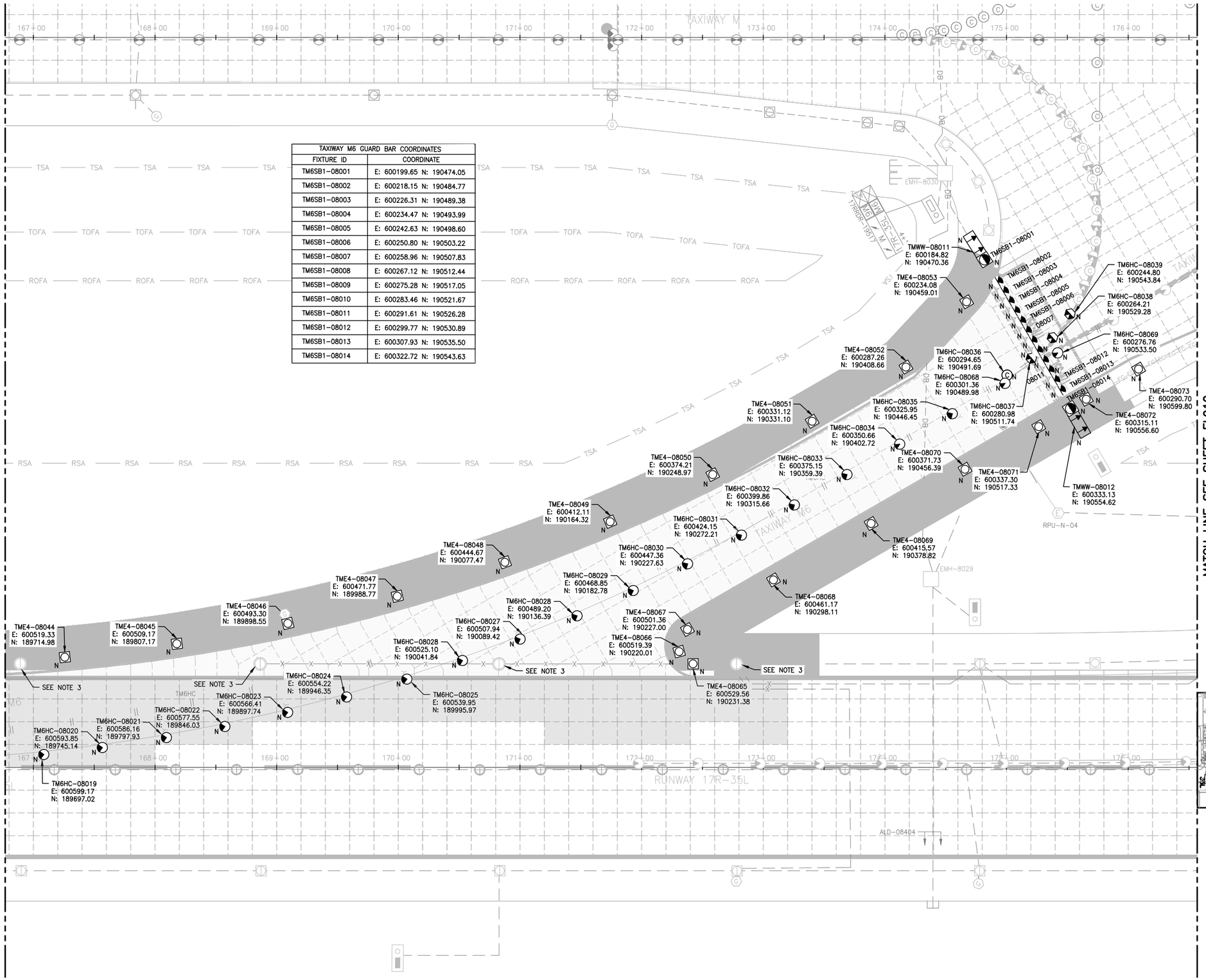

NOTES:

1. SEE SHEETS E-001 FOR GENERAL ELECTRICAL NOTES.
2. THESE DRAWINGS PROVIDE (N) COORDINATES FOR (N) BASE CANS ON T/W M6, (N) HANDHOLES, & OTHER ELECTRICAL STRUCTURES.
3. FOR BASE CANS BEING INSTALLED IN (N) PANELS OTHER THAN M6 & NOT SHOWN HERE CONTRACTOR SHALL SURVEY EXISTING BASE CAN LOCATION PRIOR TO CONCRETE PANEL DEMOLITION. INSTALL (N) BASE CANS IN SAME LOCATION.

COLORADO LICENSED PROFESSIONAL ENGINEER
DIXON LEAN
52246
2/15/19

CITY & COUNTY of DENVER

DENVER INTERNATIONAL AIRPORT

LEAN ENGINEERING

RUNWAY 17R-35L COMPLEX PAVEMENT REHABILITATION PACKAGE 1

ISSUE RECORD

NO.	BY	PURPOSE	DATE	CKD
1	LE	50% DESIGN	09/14/18	DL
2	LE	90% DESIGN	10/26/18	DL
3	LE	BID	12/26/18	DL
4	LE	CONSTRUCTION	2/15/19	DL

SCALE: AS INDICATED

DATE: FEBRUARY 15, 2019

DRAWN BY: KV

CHECKED BY: JA

FAA AIP NO:

WORK BREAKDOWN NO.

DESIGN CONTRACT NO. 201735882

CONST. CONTRACT NO. 201846271

VOLUME NO.

SHEET TITLE: BASE CAN COORDINATE PLAN (9 OF 17)

SHEET NO. EL909

369 OF 396

CADD FILE NO. _201735882-B1EELP-1356

D:\dropbox (lean photometrics)\active projects\1571801a rah den 17r-35l reconstruction\01 drawings\working drawings\Sheets_201735882-B1EELP-1356.dwg Feb 12, 2019 - 5:37pm Kat

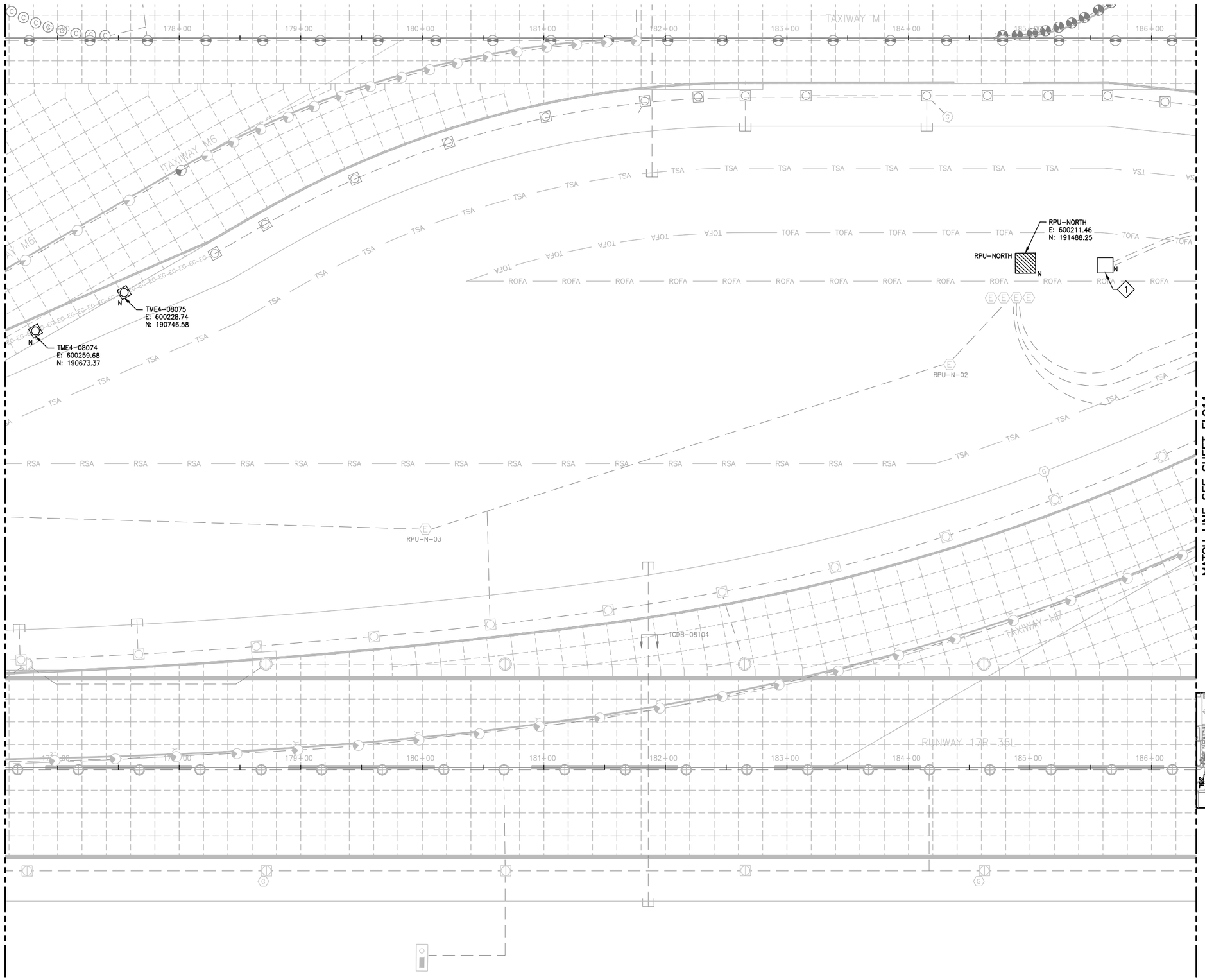

NOTES:

1. SEE SHEETS E-001 FOR GENERAL ELECTRICAL NOTES.
2. THESE DRAWINGS PROVIDE (N) COORDINATES FOR (N) BASE CANS ON T/W M6, (N) HANDHOLES, & OTHER ELECTRICAL STRUCTURES.
3. FOR BASE CANS BEING INSTALLED IN (N) PANELS OTHER THAN M6 & NOT SHOWN HERE CONTRACTOR SHALL SURVEY EXISTING BASE CAN LOCATION PRIOR TO CONCRETE PANEL DEMOLITION. INSTALL (N) BASE CANS IN SAME LOCATION.

KEY NOTES:

1. NEW HANDHOLE LOCATION MUST BE FIELD VERIFIED AND APPROVED BY AIRPORT ENGINEER.

COLORADO LICENSED
BARON LEA
52246
2/15/19
PROFESSIONAL ENGINEER

CITY & COUNTY of DENVER

DENVER INTERNATIONAL AIRPORT

LEAN ENGINEERING

RUNWAY 17R-35L COMPLEX PAVEMENT REHABILITATION PACKAGE 1

ISSUE RECORD

NO.	BY	PURPOSE	DATE	CKD
1	LE	50% DESIGN	09/14/18	DL
2	LE	90% DESIGN	10/26/18	DL
3	LE	BID	12/26/18	DL
4	LE	CONSTRUCTION	2/15/19	DL

SCALE: AS INDICATED

DATE: FEBRUARY 15, 2019

DRAWN BY: KV

CHECKED BY: JA

FAA AIP NO:

WORK BREAKDOWN NO.

DESIGN CONTRACT NO. 201735882

CONST. CONTRACT NO. 201846271

VOLUME NO.

SHEET TITLE

BASE CAN COORDINATE PLAN (10 OF 17)

SHEET NO. EL910

370 OF 396

CADD FILE NO. _201735882-B1EELP-1356

D:\dropbox (lean photometrics)\active projects\15718010 den 17r-35l reconstruction\01 drawings\working drawings\Sheets_201735882-B1EELP-1356.dwg Feb 12, 2019 - 5:37pm Kat

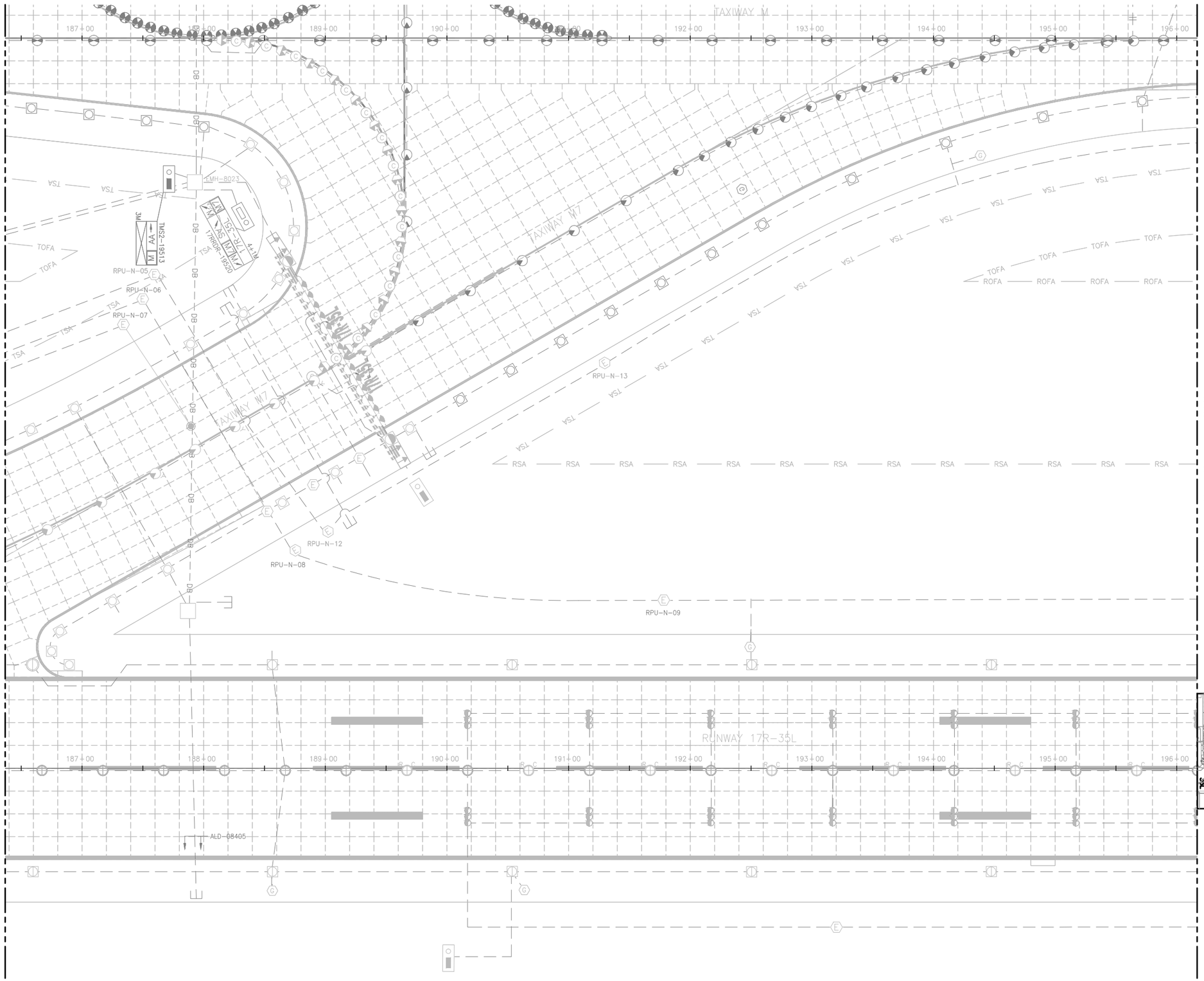

NOTES:

1. THIS SHEET IS FOR INFORMATIONAL PURPOSES ONLY. NO WORK IS REQUIRED.

COLORADO LICENSED
BARON LEAN
52246
2/15/19
PROFESSIONAL ENGINEER

CITY & COUNTY of DENVER

DENVER INTERNATIONAL AIRPORT

LEAN ENGINEERING

RUNWAY 17R-35L COMPLEX PAVEMENT REHABILITATION PACKAGE 1

ISSUE RECORD

NO.	BY	PURPOSE	DATE	CKD
1	LE	50% DESIGN	09/14/18	DL
2	LE	90% DESIGN	10/26/18	DL
3	LE	BID	12/26/18	DL
4	LE	CONSTRUCTION	2/15/19	DL

SCALE: AS INDICATED

DATE: FEBRUARY 15, 2019

DRAWN BY: KV

CHECKED BY: JA

FAA AIP NO:

WORK BREAKDOWN NO.

DESIGN CONTRACT NO. 201735882

CONST. CONTRACT NO. 201846271

VOLUME NO.

SHEET TITLE

BASE CAN COORDINATE PLAN (11 OF 17)

SHEET NO. EL911

371 OF 396

CADD FILE NO. _201735882-B1EELP-1356

D:\dropbox (lean photometrics)\active projects\1571801a rah den 17r-35l reconstruction\01 drawings\working drawings\Sheets_201735882-B1EELP-1356.dwg Feb 12, 2019 - 5:37pm Kat

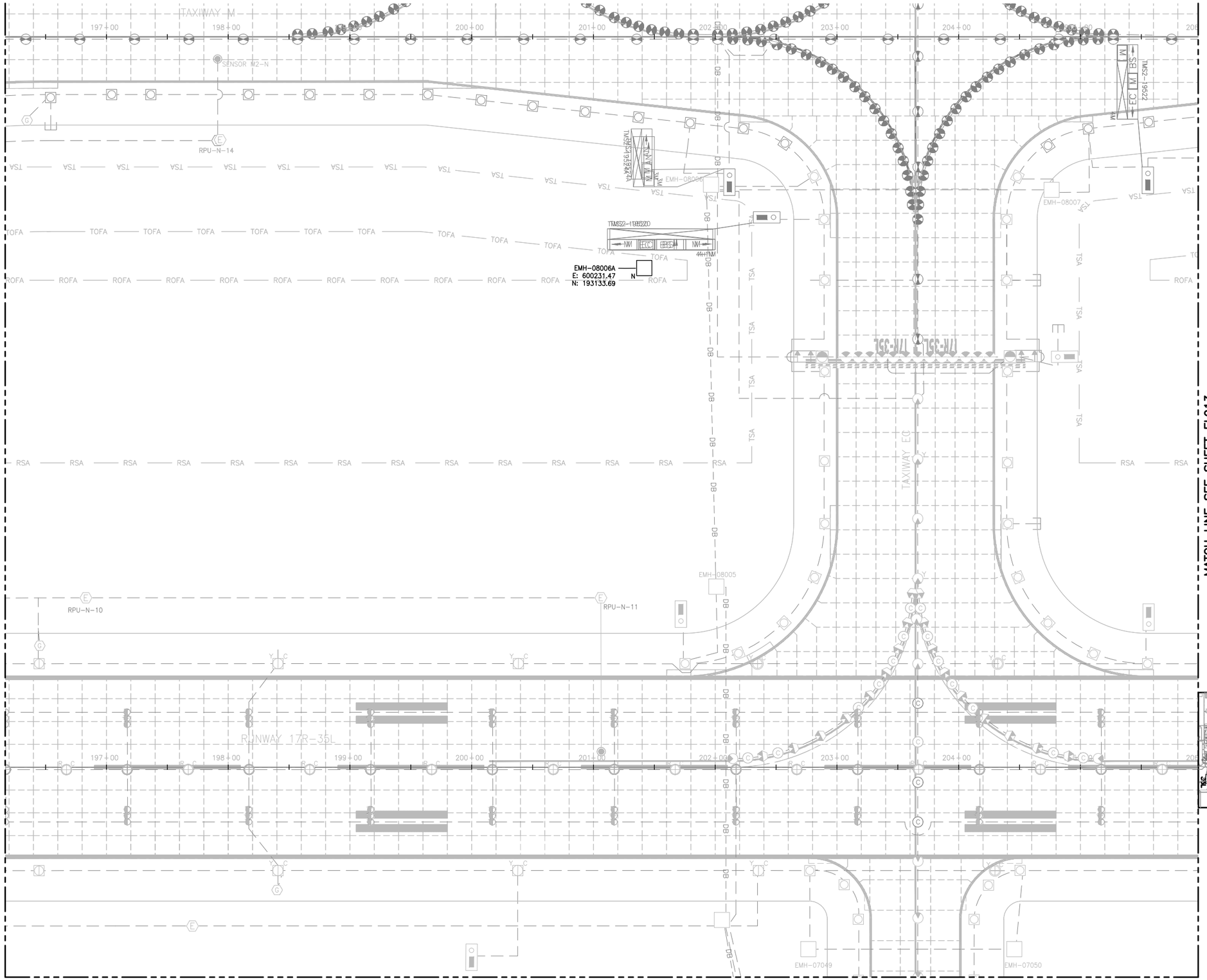

NOTES:

1. SEE SHEETS E-001 FOR GENERAL ELECTRICAL NOTES.
2. THESE DRAWINGS PROVIDE (N) COORDINATES FOR (N) BASE CANS ON T/W M6, (N) HANDHOLES, & OTHER ELECTRICAL STRUCTURES.
3. FOR BASE CANS BEING INSTALLED IN (N) PANELS OTHER THAN M6 & NOT SHOWN HERE CONTRACTOR SHALL SURVEY EXISTING BASE CAN LOCATION PRIOR TO CONCRETE PANEL DEMOLITION. INSTALL (N) BASE CANS IN SAME LOCATION.

NORTH

40' 20' 0 40'

KEY PLAN

COLORADO LICENSED
BARON LEA
52246
2/15/19
PROFESSIONAL ENGINEER

CITY & COUNTY of DENVER

DENVER INTERNATIONAL AIRPORT

LEAN ENGINEERING

RUNWAY 17R-35L COMPLEX PAVEMENT REHABILITATION PACKAGE 1

ISSUE RECORD

NO.	BY	PURPOSE	DATE	CKD
1	LE	50% DESIGN	09/14/18	DL
2	LE	90% DESIGN	10/26/18	DL
3	LE	BID	12/26/18	DL
4	LE	CONSTRUCTION	2/15/19	DL

SCALE: AS INDICATED

DATE: FEBRUARY 15, 2019

DRAWN BY: KV

CHECKED BY: JA

FAA AIP NO:

WORK BREAKDOWN NO.

DESIGN CONTRACT NO. 201735882

CONST. CONTRACT NO. 201846271

VOLUME NO.

SHEET TITLE: BASE CAN COORDINATE PLAN (12 OF 17)

SHEET NO. EL912

372 OF 396

CADD FILE NO. _201735882-B1EELP-1356

D:\dropbox (lean photometrics)\active projects\1571801a rah den 17r-35l reconstruction\01 drawings\working drawings\Sheets_201735882-B1EELP-1356.dwg Feb 12, 2019 - 5:37pm kat

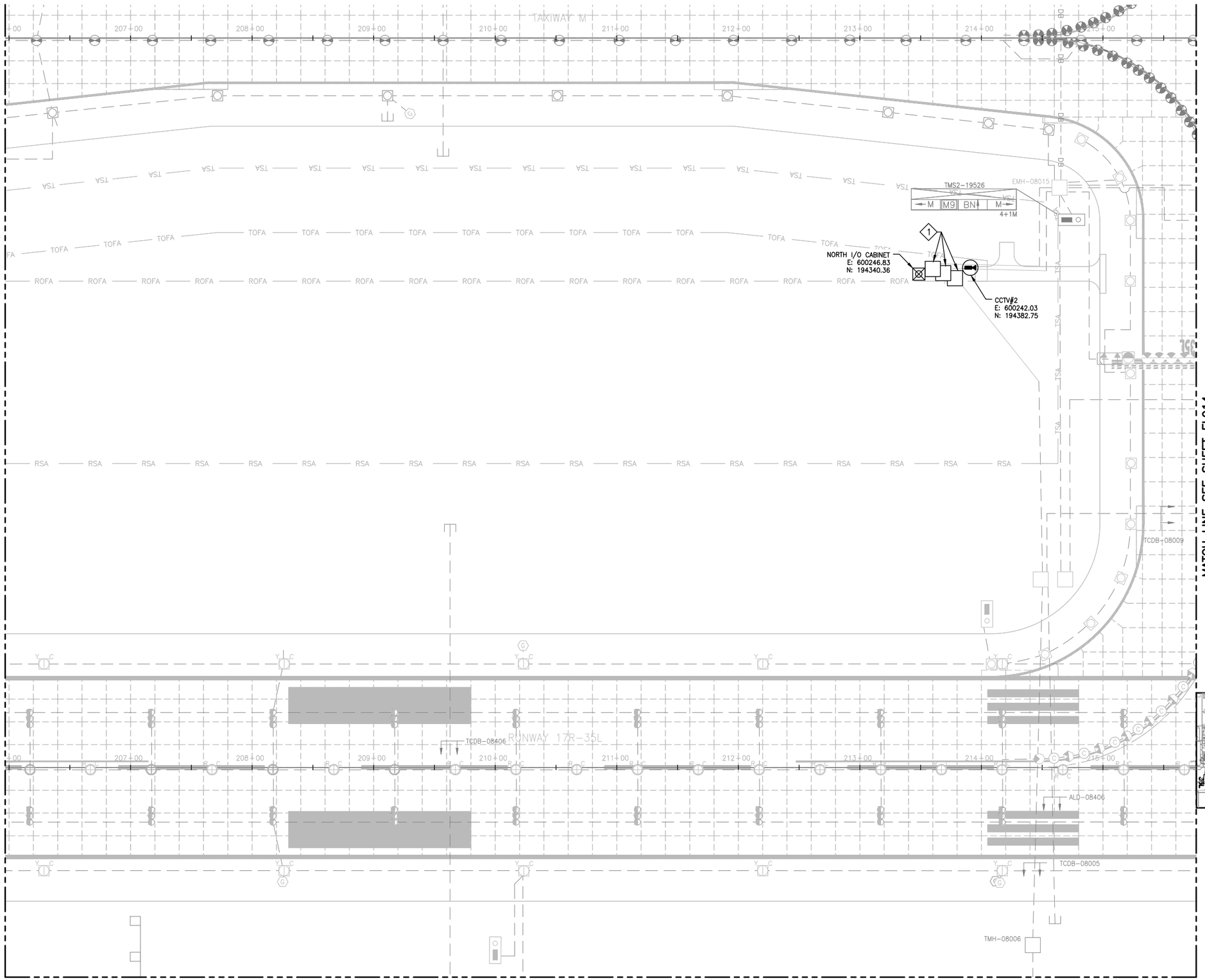

NOTES:

1. SEE SHEETS E-001 FOR GENERAL ELECTRICAL NOTES.
2. THESE DRAWINGS PROVIDE (N) COORDINATES FOR (N) BASE CANS ON T/W M6, (N) HANDHOLES, & OTHER ELECTRICAL STRUCTURES.
3. FOR BASE CANS BEING INSTALLED IN (N) PANELS OTHER THAN M6 & NOT SHOWN HERE CONTRACTOR SHALL SURVEY EXISTING BASE CAN LOCATION PRIOR TO CONCRETE PANEL DEMOLITION. INSTALL (N) BASE CANS IN SAME LOCATION.

KEY NOTES:

1. NEW HANDHOLE LOCATION MUST BE FIELD VERIFIED AND APPROVED BY AIRPORT ENGINEER.

COLORADO LICENSED
DARON LEA
52246
2/15/19
PROFESSIONAL ENGINEER

CITY & COUNTY of DENVER

DENVER INTERNATIONAL AIRPORT

LEAN ENGINEERING

RUNWAY 17R-35L COMPLEX PAVEMENT REHABILITATION PACKAGE 1

ISSUE RECORD

NO.	BY	PURPOSE	DATE	CKD
1	LE	50% DESIGN	09/14/18	DL
2	LE	90% DESIGN	10/26/18	DL
3	LE	BID	12/26/18	DL
4	LE	CONSTRUCTION	2/15/19	DL

SCALE: AS INDICATED

DATE: FEBRUARY 15, 2019

DRAWN BY: KV

CHECKED BY: JA

FAA AIP NO:

WORK BREAKDOWN NO.

DESIGN CONTRACT NO. 201735882

CONST. CONTRACT NO. 201846271

VOLUME NO.

SHEET TITLE

BASE CAN COORDINATE PLAN (13 OF 17)

SHEET NO. EL913

373 OF 396

CADD FILE NO. _201735882-B1EELP-1356

D:\dropbox (lean photometrics)\active projects\1571801a rah den 17r-35l reconstruction\01 drawings\working drawings\sheets_201735882-B1EELP-1356.dwg Feb 12, 2019 - 5:38pm Kat

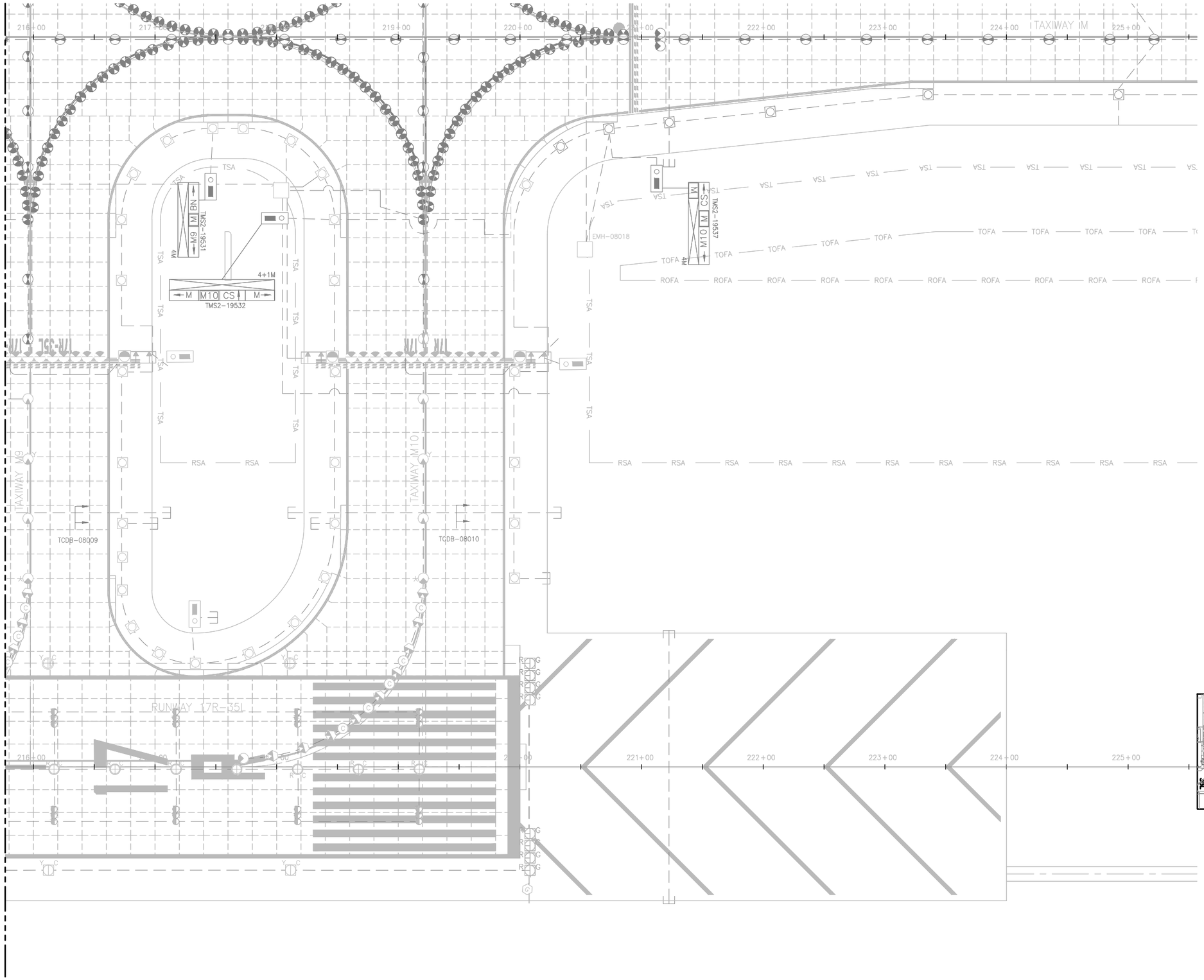

NOTES:

1. THIS SHEET IS FOR INFORMATIONAL PURPOSES ONLY. NO WORK IS REQUIRED.

NORTH

40' 20' 0 40'

KEY PLAN

COLORADO LICENSED
DORON LEA
52246
2/15/19
PROFESSIONAL ENGINEER

CITY & COUNTY of DENVER

DENVER INTERNATIONAL AIRPORT

LEAN ENGINEERING

RUNWAY 17R-35L COMPLEX PAVEMENT REHABILITATION PACKAGE 1

ISSUE RECORD

NO.	BY	PURPOSE	DATE	CKD
1	LE	50% DESIGN	09/14/18	DL
2	LE	90% DESIGN	10/26/18	DL
3	LE	BID	12/26/18	DL
4	LE	CONSTRUCTION	2/15/19	DL

SCALE: AS INDICATED

DATE: FEBRUARY 15, 2019

DRAWN BY: KV

CHECKED BY: JA

FAA AIP NO:

WORK BREAKDOWN NO.

DESIGN CONTRACT NO. 201735882

CONST. CONTRACT NO. 201846271

VOLUME NO.

SHEET TITLE: BASE CAN COORDINATE PLAN (14 OF 17)

SHEET NO. EL914

CADD FILE NO. _201735882-B1EELP-1356

D:\dropbox (lean photometrics)\active projects\1571801a rah den 17r-35l reconstruction\01 drawings\working drawings\Sheets_201735882-B1EELP-1356.dwg Feb 12, 2019 - 5:38pm Kat

MATCH LINE SEE SHEET EL903

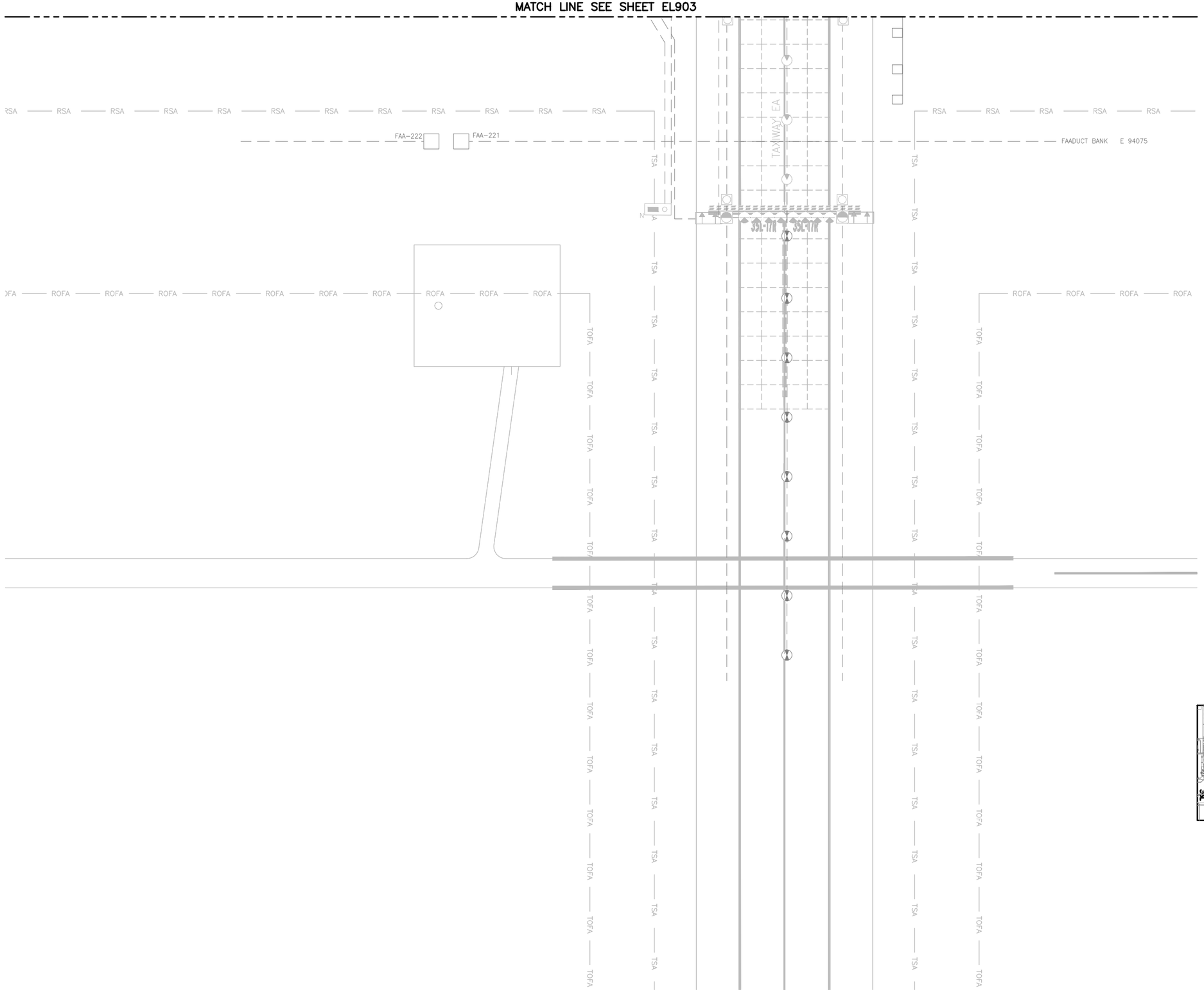

NOTES:

1. THIS SHEET IS FOR INFORMATIONAL PURPOSES ONLY. NO WORK IS REQUIRED.

NORTH

40' 20' 0 40'

KEY PLAN

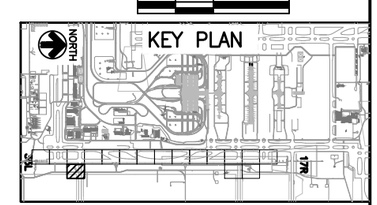

COLORADO LICENSED
DORON LEAN
52246
2/15/19
PROFESSIONAL ENGINEER

CITY & COUNTY of DENVER

DENVER INTERNATIONAL AIRPORT

LEAN ENGINEERING

RUNWAY 17R-35L COMPLEX PAVEMENT REHABILITATION PACKAGE 1

ISSUE RECORD

NO.	BY	PURPOSE	DATE	CKD
1	LE	50% DESIGN	09/14/18	DL
2	LE	90% DESIGN	10/26/18	DL
3	LE	BID	12/26/18	DL
4	LE	CONSTRUCTION	2/15/19	DL

SCALE: AS INDICATED

DATE: FEBRUARY 15, 2019

DRAWN BY: LEAN

CHECKED BY: JA

FAA AIP NO:

WORK BREAKDOWN NO.

DESIGN CONTRACT NO. 201735882

CONST. CONTRACT NO. 201846271

VOLUME NO.

SHEET TITLE

BASE CAN COORDINATE PLAN (15 OF 17)

SHEET NO. EL915

375 OF 396

CADD FILE NO. _201735882-B1EELP-1356

D:\dropbox (lean photometrics)\active projects\1571801a rah den 17r-35l reconstruction\01 drawings\working drawings\Sheets_201735882-B1EELP-1356.dwg Feb 12, 2019 - 5:38pm Kat

MATCH LINE SEE SHEET EL912

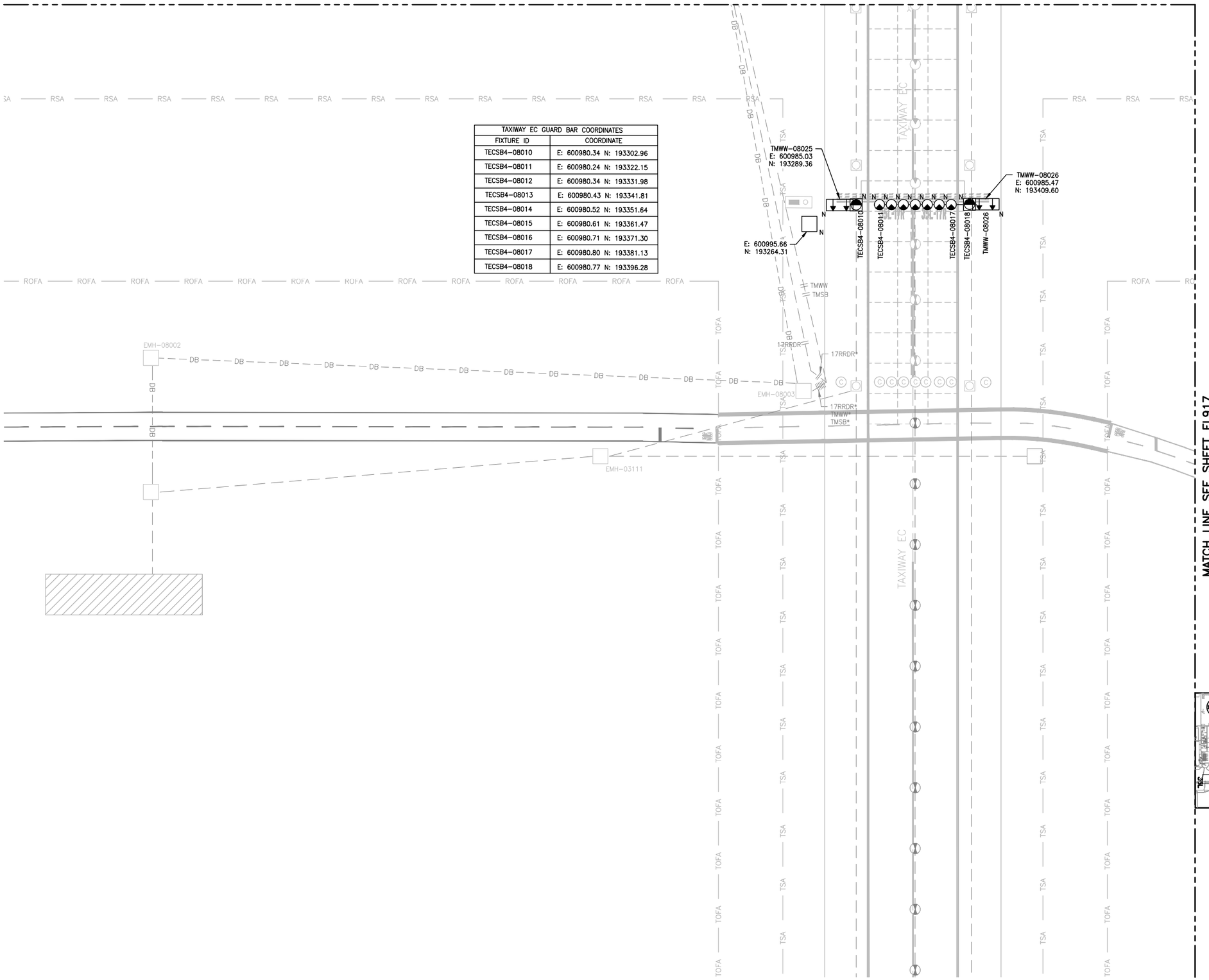

TAXIWAY EC GUARD BAR COORDINATES	
FIXTURE ID	COORDINATE
TECSB4-08010	E: 600980.34 N: 193302.96
TECSB4-08011	E: 600980.24 N: 193322.15
TECSB4-08012	E: 600980.34 N: 193331.98
TECSB4-08013	E: 600980.43 N: 193341.81
TECSB4-08014	E: 600980.52 N: 193351.64
TECSB4-08015	E: 600980.61 N: 193361.47
TECSB4-08016	E: 600980.71 N: 193371.30
TECSB4-08017	E: 600980.80 N: 193381.13
TECSB4-08018	E: 600980.77 N: 193396.28

MATCH LINE SEE SHEET EL917

NOTES:

1. SEE SHEETS E-001 FOR GENERAL ELECTRICAL NOTES.
2. THESE DRAWINGS PROVIDE (N) COORDINATES FOR (N) BASE CANS ON T/W M6, (N) HANDHOLES, & OTHER ELECTRICAL STRUCTURES.
3. FOR BASE CANS BEING INSTALLED IN (N) PANELS OTHER THAN M6 & NOT SHOWN HERE CONTRACTOR SHALL SURVEY EXISTING BASE CAN LOCATION PRIOR TO CONCRETE PANEL DEMOLITION. INSTALL (N) BASE CANS IN SAME LOCATION.

NORTH

40' 20' 0 40'

KEY PLAN

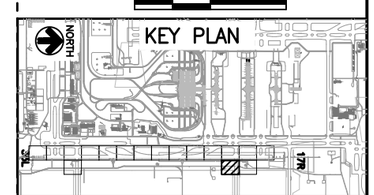

COLORADO LICENSED
BARON LEA
52246
2/15/19
PROFESSIONAL ENGINEER

CITY & COUNTY of DENVER

DENVER INTERNATIONAL AIRPORT

LEAN ENGINEERING

RUNWAY 17R-35L COMPLEX PAVEMENT REHABILITATION PACKAGE 1

ISSUE RECORD

NO.	BY	PURPOSE	DATE	CKD
1	LE	50% DESIGN	09/14/18	DL
2	LE	90% DESIGN	10/26/18	DL
3	LE	BID	12/26/18	DL
4	LE	CONSTRUCTION	2/15/19	DL

SCALE: AS INDICATED

DATE: FEBRUARY 15, 2019

DRAWN BY: KV

CHECKED BY: JA

FAA AIP NO:

WORK BREAKDOWN NO.

DESIGN CONTRACT NO. 201735882

CONST. CONTRACT NO. 201846271

VOLUME NO.

SHEET TITLE

BASE CAN COORDINATE PLAN (16 OF 17)

SHEET NO. EL916

376 OF 396

CADD FILE NO. _201735882-B1EELP-1356

D:\dropbox (lean photometrics)\active projects\1571801a rah den 17r-35l reconstruction\01 drawings\working drawings\Sheets_201735882-B1EELP-1356.dwg Feb 12, 2019 - 5:38pm Kat

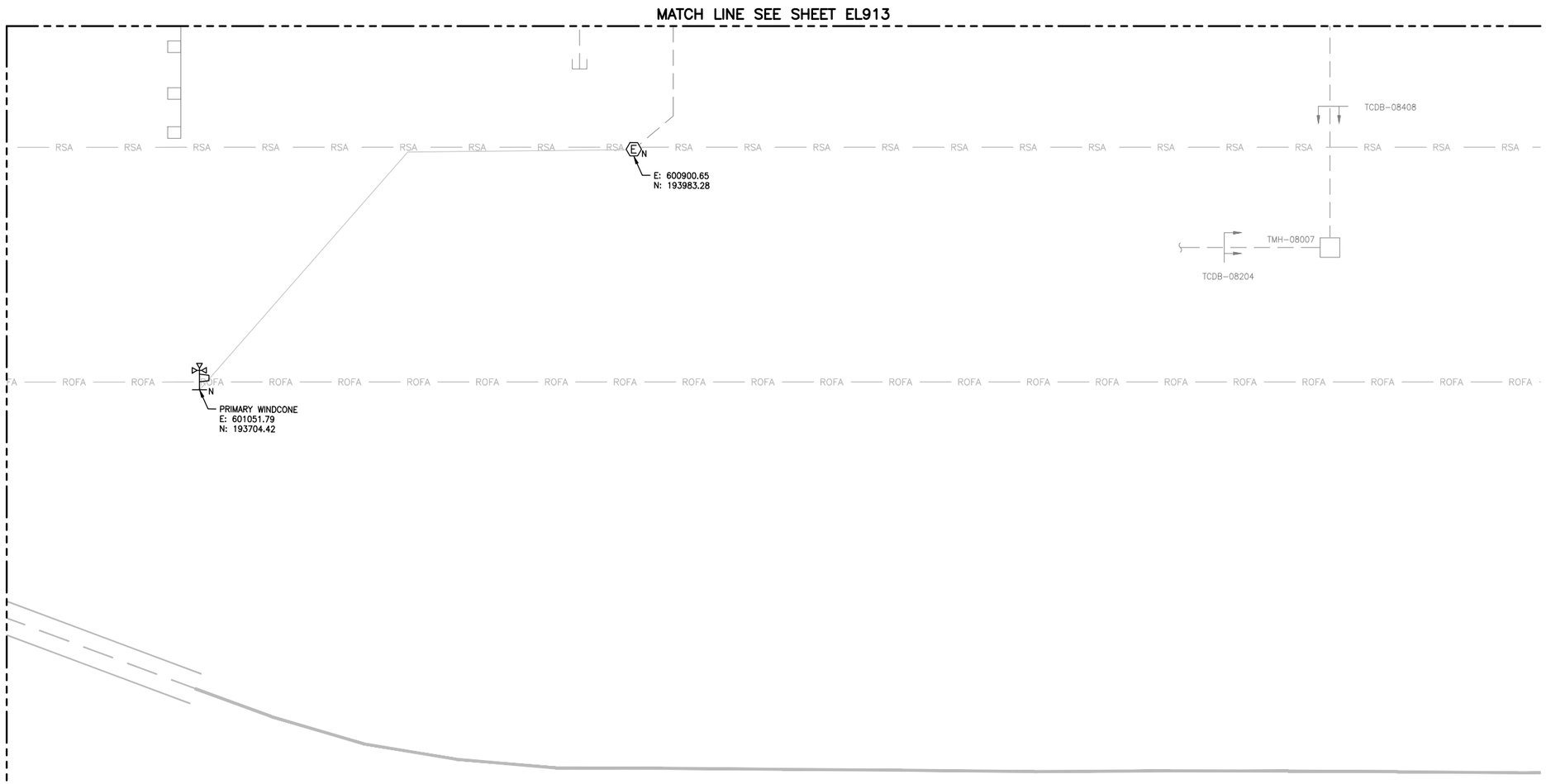

NOTES:

1. SEE SHEETS E-001 FOR GENERAL ELECTRICAL NOTES.
2. THESE DRAWINGS PROVIDE (N) COORDINATES FOR (N) BASE CANS ON T/W M6, (N) HANDHOLES, & OTHER ELECTRICAL STRUCTURES.
3. FOR BASE CANS BEING INSTALLED IN (N) PANELS OTHER THAN M6 & NOT SHOWN HERE CONTRACTOR SHALL SURVEY EXISTING BASE CAN LOCATION PRIOR TO CONCRETE PANEL DEMOLITION. INSTALL (N) BASE CANS IN SAME LOCATION.

NORTH

40' 20' 0 40'

KEY PLAN

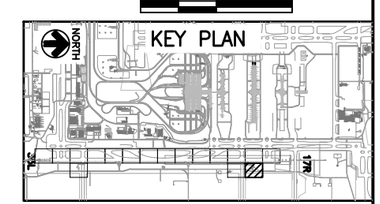

COLORADO LICENSED
BARON LEA
52246
2/15/19
PROFESSIONAL ENGINEER

CITY & COUNTY of DENVER

DENVER INTERNATIONAL AIRPORT

LEAN ENGINEERING

RUNWAY 17R-35L COMPLEX PAVEMENT REHABILITATION PACKAGE 1

ISSUE RECORD

NO.	BY	PURPOSE	DATE	CKD
1	LE	50% DESIGN	09/14/18	DL
2	LE	90% DESIGN	10/26/18	DL
3	LE	BID	12/26/18	DL
4	LE	CONSTRUCTION	2/15/19	DL

SCALE: AS INDICATED

DATE: FEBRUARY 15, 2019

DRAWN BY: KV

CHECKED BY: JA

FAA AIP NO:

WORK BREAKDOWN NO.

DESIGN CONTRACT NO. 201735882

CONST. CONTRACT NO. 201846271

VOLUME NO.

SHEET TITLE

BASE CAN COORDINATE PLAN (17 OF 17)

SHEET NO. EL917

377 OF 396

CADD FILE NO. _201735882-B1EELP-1356

D:\dropbox (lean photometrics)\active projects\1571801a den 17r-35l reconstruction\01 drawings\working drawings\Sheets_201735882-B1EELP-1356.dwg Feb 12, 2019 - 5:39pm Kat

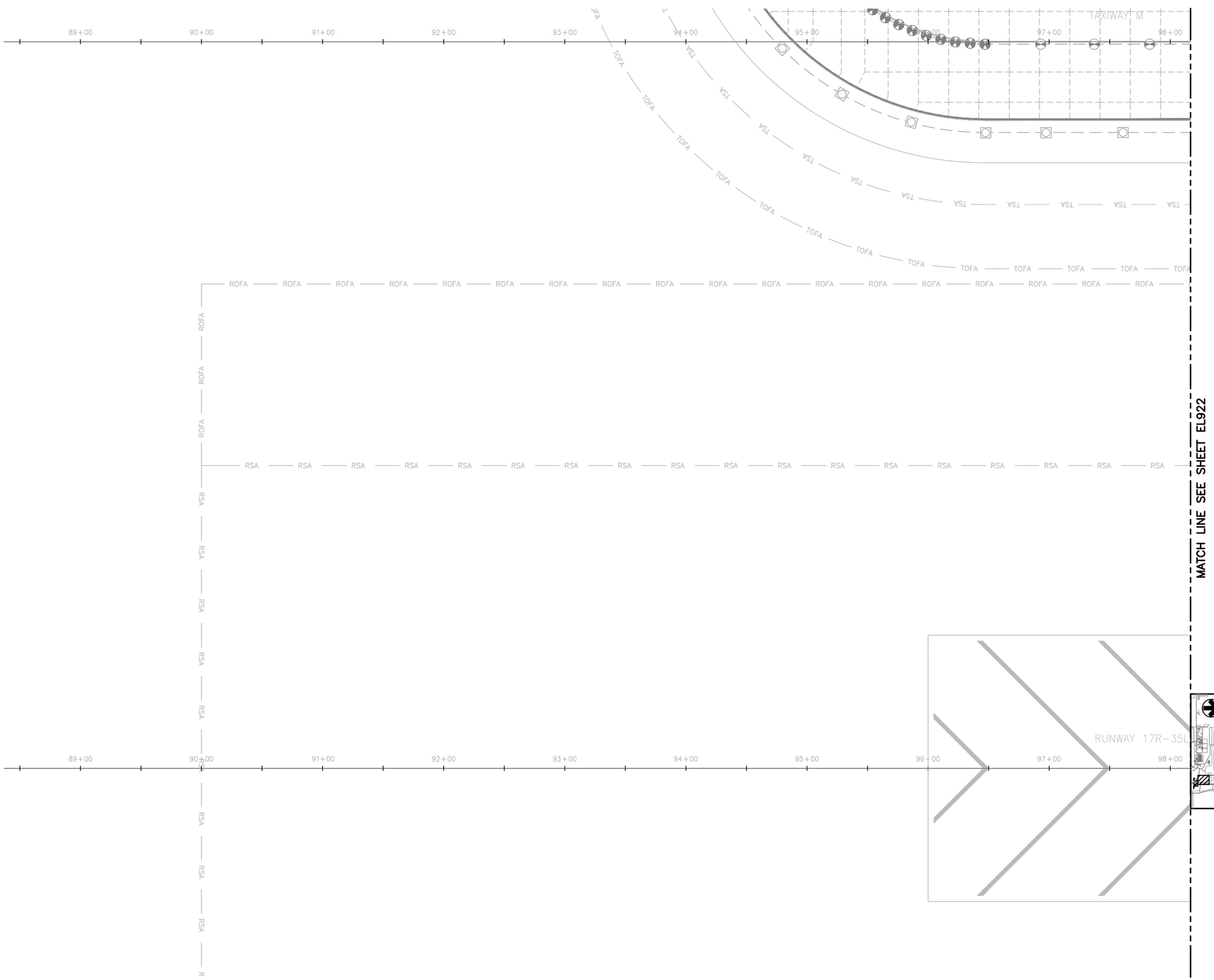

NOTES:

1. THIS SHEET IS FOR INFORMATIONAL PURPOSES ONLY. NO WORK IS REQUIRED.

COLORADO LICENSED
DORON LEAN
52246
2/15/19
PROFESSIONAL ENGINEER

CITY & COUNTY of DENVER

DENVER INTERNATIONAL AIRPORT

LEAN ENGINEERING

RUNWAY 17R-35L COMPLEX PAVEMENT REHABILITATION PACKAGE 1

ISSUE RECORD

NO.	BY	PURPOSE	DATE	CKD
1	LE	50% DESIGN	09/14/18	DL
2	LE	90% DESIGN	10/26/18	DL
3	LE	BID	12/26/18	DL
4	LE	CONSTRUCTION	2/15/19	DL

SCALE: AS INDICATED

DATE: FEBRUARY 15, 2019

DRAWN BY: KV

CHECKED BY: JA

FAA AIP NO:

WORK BREAKDOWN NO.

DESIGN CONTRACT NO. 201735882

CONST. CONTRACT NO. 201846271

VOLUME NO.

SHEET TITLE

SIGNAGE PLAN (1 OF 17)

SHEET NO. EL921

378 OF 396

CADD FILE NO. _201735882-B1EELP-1356

D:\dropbox (lean photometrics)\active projects\1571801a rah den 17r-35l reconstruction\01 drawings\working drawings\Sheets_201735882-B1EELP-1356.dwg Feb 12, 2019 - 5:39pm Kat

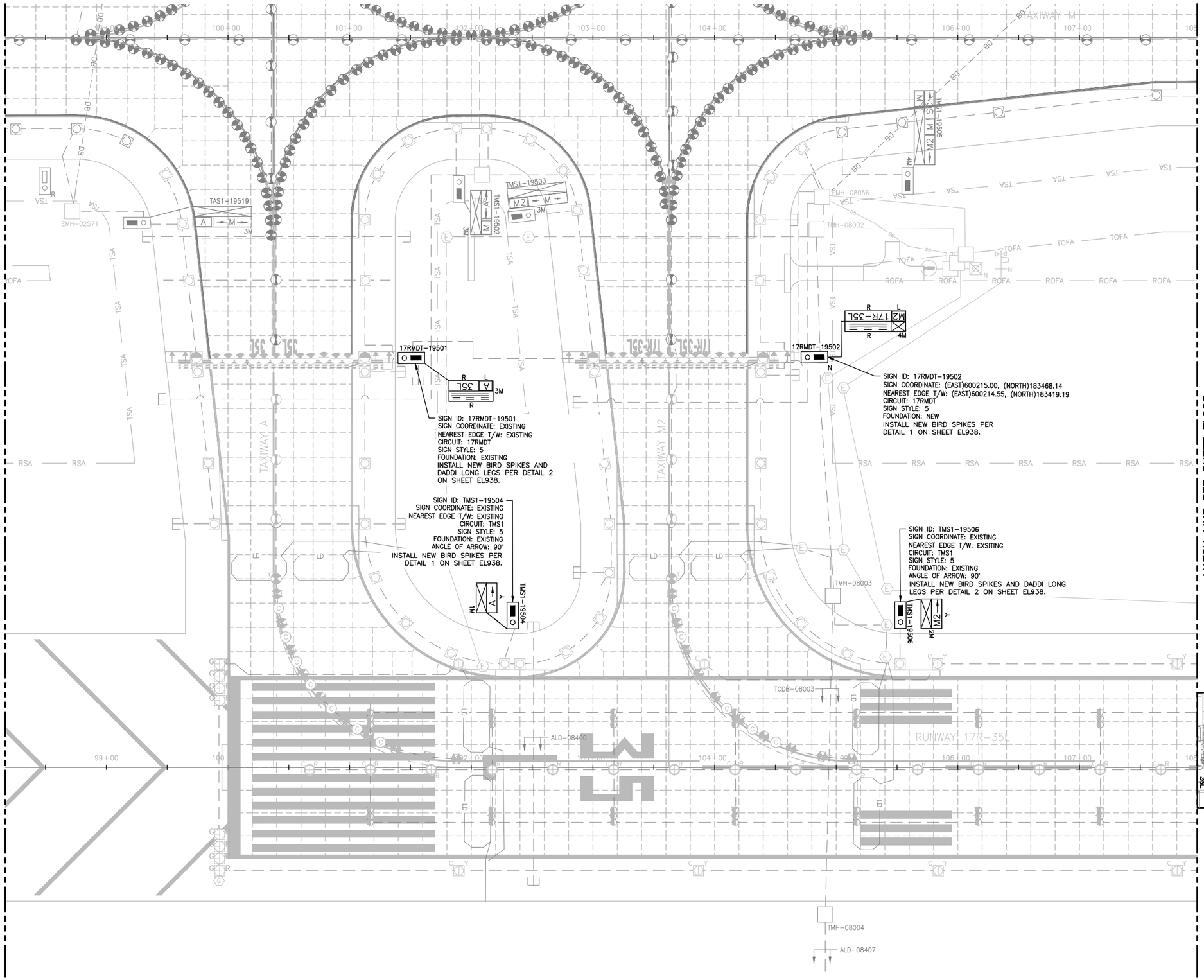

NOTES:

1. SIGN LENGTHS MAY VARY DEPENDING ON MANUFACTURER.
2. CONFIRM LENGTH WITH MANUFACTURER PRIOR TO BID AND ADJUST FOUNDATION ACCORDINGLY.
3. PROVIDE UTILITY LOCATION & POT-HOLING OF LOCATION OF NEW SIGN. SURVEY RESULTS.
4. PROVIDE SHOP DRAWING SHOWING LOCATION OF PROPOSED SIGN & SURVEYED UTILITIES. OBTAIN APPROVAL FROM DENVER PROJECT MANAGER, PRIOR TO EXCAVATION.
5. BLUE STAKE THE 4 CORNERS OF SIGN AND FOUNDATION AND DEFINED EDGE OF T/W TO OBTAIN ENGINEER'S APPROVAL PRIOR TO EXCAVATION. THIS APPLIES TO ALL NEW SIGNS.
6. THE DESIGNATIONS OF SIGNS TO BE INSTALLED ARE:

   R = LIGHTED MANDATORY SIGN (WHITE LEGEND ON RED BACKGROUND)

   L = LIGHTED TAXIWAY AND RUNWAY LOCATION SIGN (YELLOW LEGEND AND BORDER ON BLACK BACKGROUND)

   Y = LIGHTED DIRECTION, DESTINATION & BOUNDARY SIGNS (BLACK LEGEND ON YELLOW BACKGROUND)

   B = LIGHTED RUNWAY DISTANCE REMAINING SIGN (WHITE LEGEND ON BLACK BACKGROUND)
7. THE ANGLE OF THE ARROW OF THE SIGN IS GIVEN ACCORDING TO THE BELOW CONVENTION. ANGLE IN PARENTHESIS DENOTES ARROW ANGLE IF NOT 0°, 90°, 180°, OR 270°.

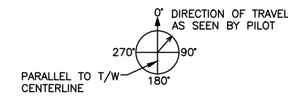

8. ACTUAL NUMBER OF MODULES/WIDTH TO BE USED FOR EACH SIGN WILL BE DETERMINED BY SIGN MANUFACTURER.
   1M = 1 MODULE
   2M = 2 MODULES
   3M = 3 MODULES
   4M = 4 MODULES
9. SIGN COORDINATE IS DEFINED AS THE COORDINATE TO THE NEAREST EDGE OF SIGN AND NOT BASE CAN AND NOT FOUNDATION.
10. SIGN LOCATION & ALIGNMENT: INSTALL SIGN SO THAT IT IS IN LINE WITH AN IMAGINARY LINE STRETCHING BETWEEN SIGN COORDINATE & DEFINED EDGE OF TAXIWAY. LOCATION SHALL BE SO THAT THE SIGN COORDINATE IS AT THE NEAREST EDGE OF SIGN.
11. SIGN CHARACTERISTICS:
   - ALL NEW SIGNS SHALL BE LED.
   - RDR SIGNS MUST BE SIZE 4
   - ALL OTHER GUIDANCE SIGNS MUST BE SIZE 3.
   - SIGNS MUST BE MODE 2.
12. INSTALL BIRD ABATEMENT PROTECTION ON SIGNS WITH DESIGNATION AS SHOWN. COST FOR BIRD ABATEMENT SHALL BE BID UNDER BID ITEM L-128.

40' 20' 0 40'

NORTH

KEY PLAN

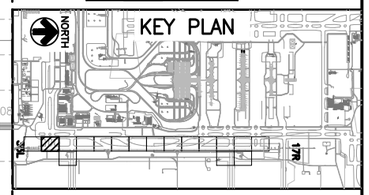

COLORADO LICENSED
DIXON LEAN
52246
2/15/19
PROFESSIONAL ENGINEER

CITY & COUNTY of DENVER

DENVER INTERNATIONAL AIRPORT

LEAN ENGINEERING

RUNWAY 17R-35L COMPLEX PAVEMENT REHABILITATION PACKAGE 1

ISSUE RECORD

NO.	BY	PURPOSE	DATE	CKD
1	LE	50% DESIGN	09/14/18	DL
2	LE	90% DESIGN	10/26/18	DL
3	LE	BID	12/26/18	DL
4	LE	CONSTRUCTION	2/15/19	DL

SCALE: AS INDICATED

DATE: FEBRUARY 15, 2019

DRAWN BY: KV

CHECKED BY: JA

FAA AIP NO:

WORK BREAKDOWN NO.

DESIGN CONTRACT NO. 201735882

CONST. CONTRACT NO. 201846271

VOLUME NO.

SHEET TITLE

SIGNAGE PLAN (2 OF 17)

SHEET NO. EL922

379 OF 396

CADD FILE NO. _201735882-B1EELP-1356

D:\dropbox (lean photometrics)\active projects\1571801a rah den 17r-35l reconstruction\01 drawings\working drawings\Sheets_201735882-B1EELP-1356.dwg Feb 12, 2019 - 5:39pm Kat

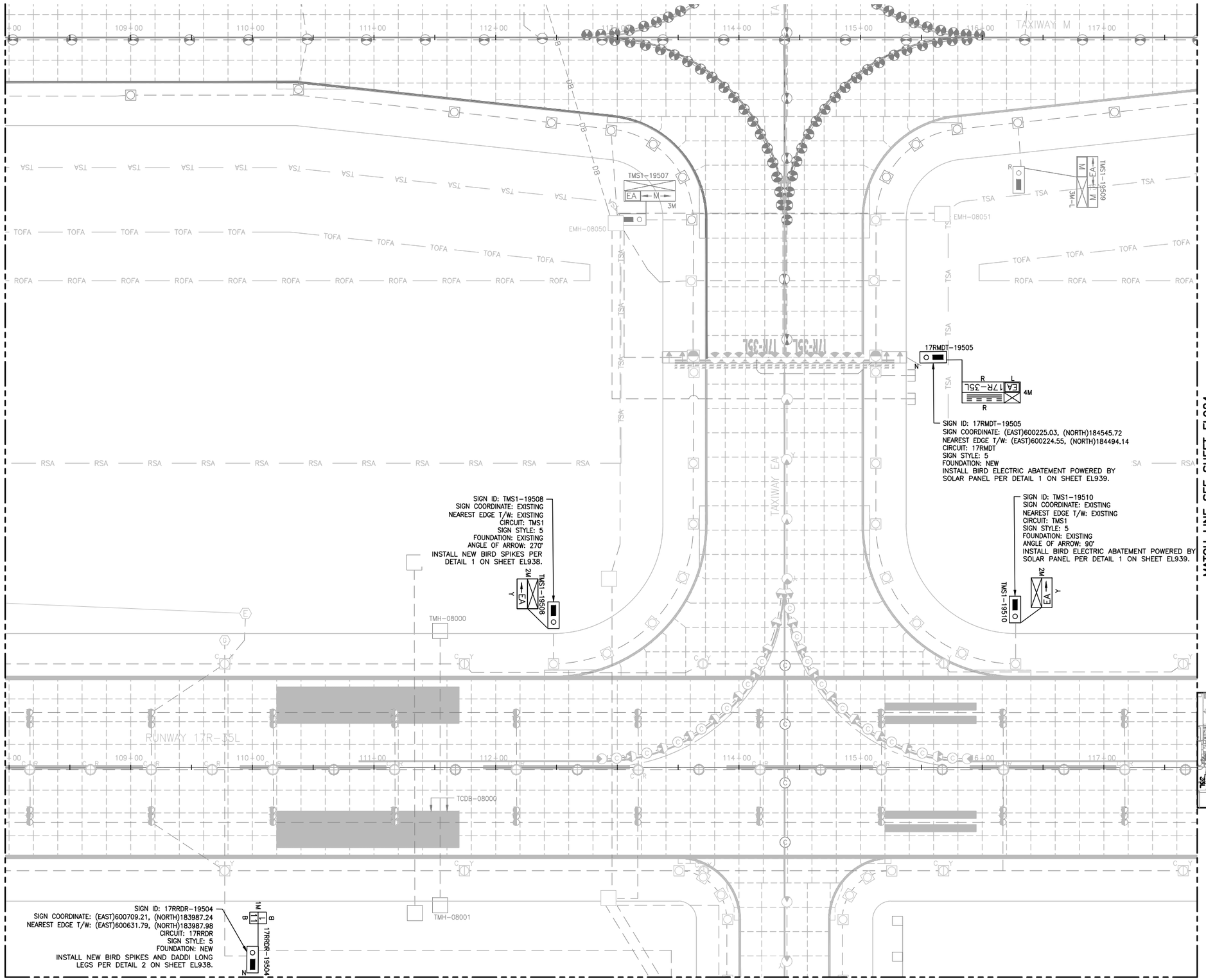

NOTES:

1. SIGN LENGTHS MAY VARY DEPENDING ON MANUFACTURER.
2. CONFIRM LENGTH WITH MANUFACTURER PRIOR TO BID AND ADJUST FOUNDATION ACCORDINGLY.
3. PROVIDE UTILITY LOCATION & POT–HOLING OF LOCATION OF NEW SIGN. SURVEY RESULTS.
4. PROVIDE SHOP DRAWING SHOWING LOCATION OF PROPOSED SIGN & SURVEYED UTILITIES. OBTAIN APPROVAL FROM DENVER PROJECT MANAGER, PRIOR TO EXCAVATION.
5. BLUE STAKE THE 4 CORNERS OF SIGN AND FOUNDATION AND DEFINED EDGE OF T/W TO OBTAIN ENGINEER'S APPROVAL PRIOR TO EXCAVATION. THIS APPLIES TO ALL NEW SIGNS.
6. THE DESIGNATIONS OF SIGNS TO BE INSTALLED ARE:

   R = LIGHTED MANDATORY SIGN (WHITE LEGEND ON RED BACKGROUND)

   L = LIGHTED TAXIWAY AND RUNWAY LOCATION SIGN (YELLOW LEGEND AND BORDER ON BLACK BACKGROUND)

   Y = LIGHTED DIRECTION, DESTINATION & BOUNDARY SIGNS (BLACK LEGEND ON YELLOW BACKGROUND)

   B = LIGHTED RUNWAY DISTANCE REMAINING SIGN (WHITE LEGEND ON BLACK BACKGROUND)
7. THE ANGLE OF THE ARROW OF THE SIGN IS GIVEN ACCORDING TO THE BELOW CONVENTION. ANGLE IN PARENTHESIS DENOTES ARROW ANGLE IF NOT 0°, 90°, 180°, OR 270°.

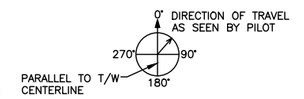

8. ACTUAL NUMBER OF MODULES/WIDTH TO BE USED FOR EACH SIGN WILL BE DETERMINED BY SIGN MANUFACTURER.
   1M = 1 MODULE
   2M = 2 MODULES
   3M = 3 MODULES
   4M = 4 MODULES
9. SIGN COORDINATE IS DEFINED AS THE COORDINATE TO THE NEAREST EDGE OF SIGN AND NOT BASE CAN AND NOT FOUNDATION.
10. SIGN LOCATION & ALIGNMENT: INSTALL SIGN SO THAT IT IS IN LINE WITH AN IMAGINARY LINE STRETCHING BETWEEN SIGN COORDINATE & DEFINED EDGE OF TAXIWAY. LOCATION SHALL BE SO THAT THE SIGN COORDINATE IS AT THE NEAREST EDGE OF SIGN.
11. SIGN CHARACTERISTICS:
   – ALL NEW SIGNS SHALL BE LED.
   – RDR SIGNS MUST BE SIZE 4
   – ALL OTHER GUIDANCE SIGNS MUST BE SIZE 3.
   – SIGNS MUST BE MODE 2.
12. INSTALL BIRD ABATEMENT PROTECTION ON SIGNS WITH DESIGNATION AS SHOWN. COST FOR BIRD ABATEMENT SHALL BE BID UNDER BID ITEM L–128.

40' 20' 0 40'

NORTH

KEY PLAN

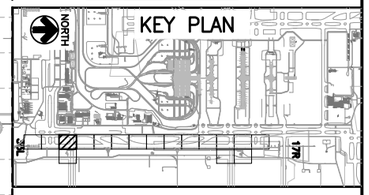

COLORADO LICENSED
AARON LEAN
52246
2/15/19
PROFESSIONAL ENGINEER

CITY & COUNTY of DENVER

DENVER INTERNATIONAL AIRPORT

LEAN ENGINEERING

RUNWAY 17R-35L COMPLEX PAVEMENT REHABILITATION PACKAGE 1

ISSUE RECORD

NO.	BY	PURPOSE	DATE	CKD
1	LE	50% DESIGN	09/14/18	DL
2	LE	90% DESIGN	10/26/18	DL
3	LE	BID	12/26/18	DL
4	LE	CONSTRUCTION	2/15/19	DL

SCALE: AS INDICATED

DATE: FEBRUARY 15, 2019

DRAWN BY: KV

CHECKED BY: JA

FAA AIP NO:

WORK BREAKDOWN NO.

DESIGN CONTRACT NO. 201735882

CONST. CONTRACT NO. 201846271

VOLUME NO.

SHEET TITLE

SIGNAGE PLAN (3 OF 17)

SHEET NO. EL923

380 OF 396

CADD FILE NO. _201735882-B1EELP-1356

D:\dropbox (lean photometrics)\active projects\157180la rah den 17r-35l reconstruction\01 drawings\working drawings\Sheets_201735882-B1EELP-1356.dwg Feb 12, 2019 – 5:39pm Kat

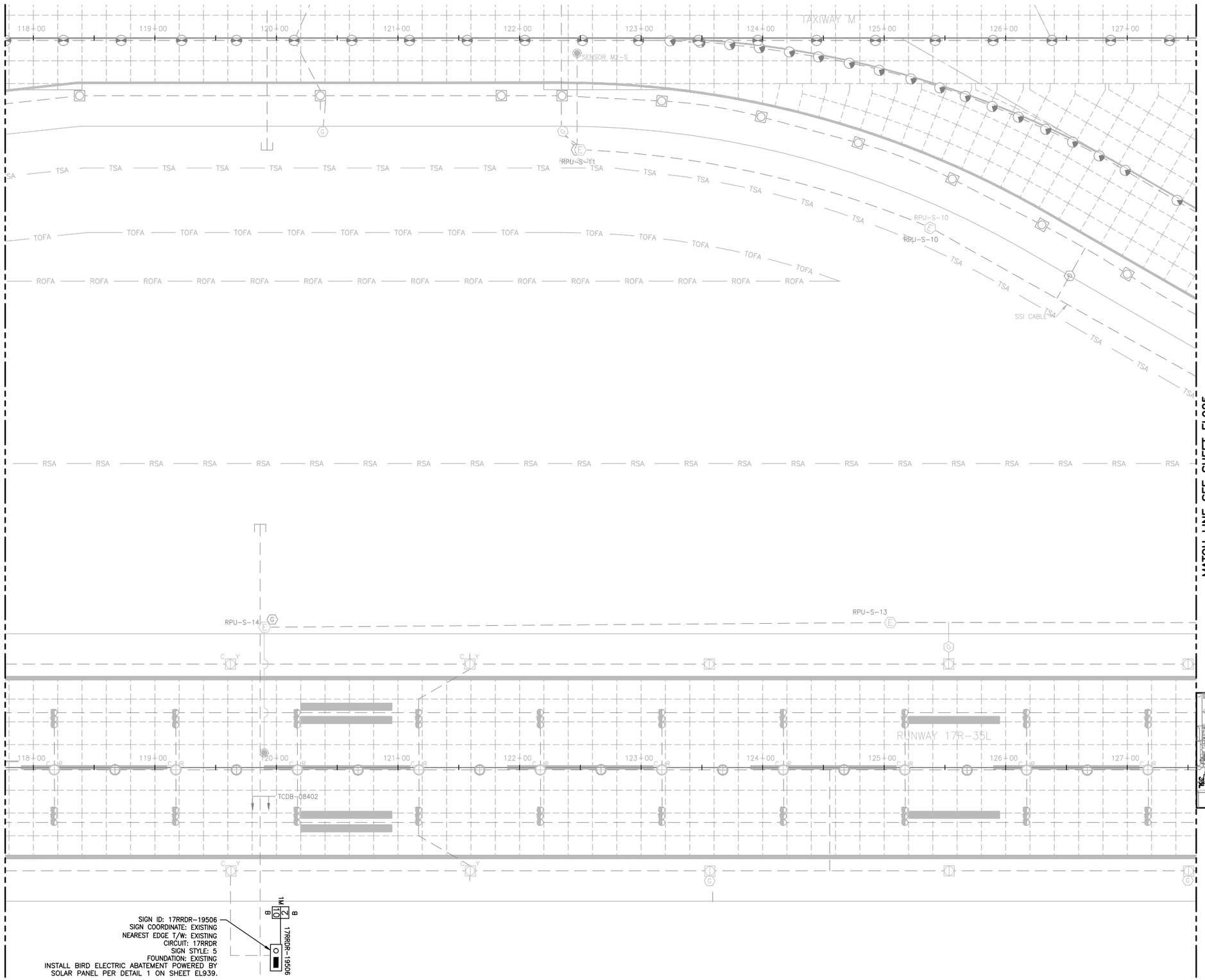

NOTES:

1. SIGN LENGTHS MAY VARY DEPENDING ON MANUFACTURER.
2. CONFIRM LENGTH WITH MANUFACTURER PRIOR TO BID AND ADJUST FOUNDATION ACCORDINGLY.
3. PROVIDE UTILITY LOCATION & POT–HOLING OF LOCATION OF NEW SIGN. SURVEY RESULTS.
4. PROVIDE SHOP DRAWING SHOWING LOCATION OF PROPOSED SIGN & SURVEYED UTILITIES. OBTAIN APPROVAL FROM DENVER PROJECT MANAGER, PRIOR TO EXCAVATION.
5. BLUE STAKE THE 4 CORNERS OF SIGN AND FOUNDATION AND DEFINED EDGE OF T/W TO OBTAIN ENGINEER'S APPROVAL PRIOR TO EXCAVATION. THIS APPLIES TO ALL NEW SIGNS.
6. THE DESIGNATIONS OF SIGNS TO BE INSTALLED ARE:

   R = LIGHTED MANDATORY SIGN (WHITE LEGEND ON RED BACKGROUND)

   L = LIGHTED TAXIWAY AND RUNWAY LOCATION SIGN (YELLOW LEGEND AND BORDER ON BLACK BACKGROUND)

   Y = LIGHTED DIRECTION, DESTINATION & BOUNDARY SIGNS (BLACK LEGEND ON YELLOW BACKGROUND)

   B = LIGHTED RUNWAY DISTANCE REMAINING SIGN (WHITE LEGEND ON BLACK BACKGROUND)
7. THE ANGLE OF THE ARROW OF THE SIGN IS GIVEN ACCORDING TO THE BELOW CONVENTION. ANGLE IN PARENTHESIS DENOTES ARROW ANGLE IF NOT 0°, 90°, 180°, OR 270°.

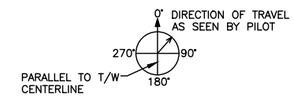

8. ACTUAL NUMBER OF MODULES/WIDTH TO BE USED FOR EACH SIGN WILL BE DETERMINED BY SIGN MANUFACTURER.
   1M = 1 MODULE
   2M = 2 MODULES
   3M = 3 MODULES
   4M = 4 MODULES
9. SIGN COORDINATE IS DEFINED AS THE COORDINATE TO THE NEAREST EDGE OF SIGN AND NOT BASE CAN AND NOT FOUNDATION.
10. SIGN LOCATION & ALIGNMENT:
    INSTALL SIGN SO THAT IT IS IN LINE WITH AN IMAGINARY LINE STRETCHING BETWEEN SIGN COORDINATE & DEFINED EDGE OF TAXIWAY. LOCATION SHALL BE SO THAT THE SIGN COORDINATE IS AT THE NEAREST EDGE OF SIGN.
11. SIGN CHARACTERISTICS:
    – ALL NEW SIGNS SHALL BE LED.
    – RDR SIGNS MUST BE SIZE 4
    – ALL OTHER GUIDANCE SIGNS MUST BE SIZE 3.
    – SIGNS MUST BE MODE 2.
12. INSTALL BIRD ABATEMENT PROTECTION ON SIGNS WITH DESIGNATION AS SHOWN. COST FOR BIRD ABATEMENT SHALL BE BID UNDER BID ITEM L–128.

40' 20' 0 40'

NORTH

KEY PLAN

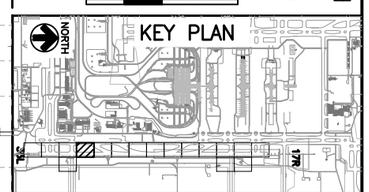

COLORADO LICENSED
DORON LEAN
52246
2/15/19
PROFESSIONAL ENGINEER

CITY & COUNTY of DENVER

DENVER INTERNATIONAL AIRPORT

LEAN ENGINEERING

RUNWAY 17R-35L COMPLEX PAVEMENT REHABILITATION PACKAGE 1

ISSUE RECORD

NO.	BY	PURPOSE	DATE	CKD
1	LE	50% DESIGN	09/14/18	DL
2	LE	90% DESIGN	10/26/18	DL
3	LE	BID	12/26/18	DL
4	LE	CONSTRUCTION	2/15/19	DL

SCALE: AS INDICATED

DATE: FEBRUARY 15, 2019

DRAWN BY: KV

CHECKED BY: JA

FAA AIP NO:

WORK BREAKDOWN NO.

DESIGN CONTRACT NO. 201735882

CONST. CONTRACT NO. 201846271

VOLUME NO.

SHEET TITLE

SIGNAGE PLAN (4 OF 17)

SHEET NO. EL924

381 OF 396

CADD FILE NO. _201735882-B1EELP-1356

D:\dropbox (lean photometrics)\active projects\1571801a rah den 17r-35l reconstruction\01 drawings\working drawings\Sheets_201735882-B1EELP-1356.dwg Feb 12, 2019 – 5:40pm Kat

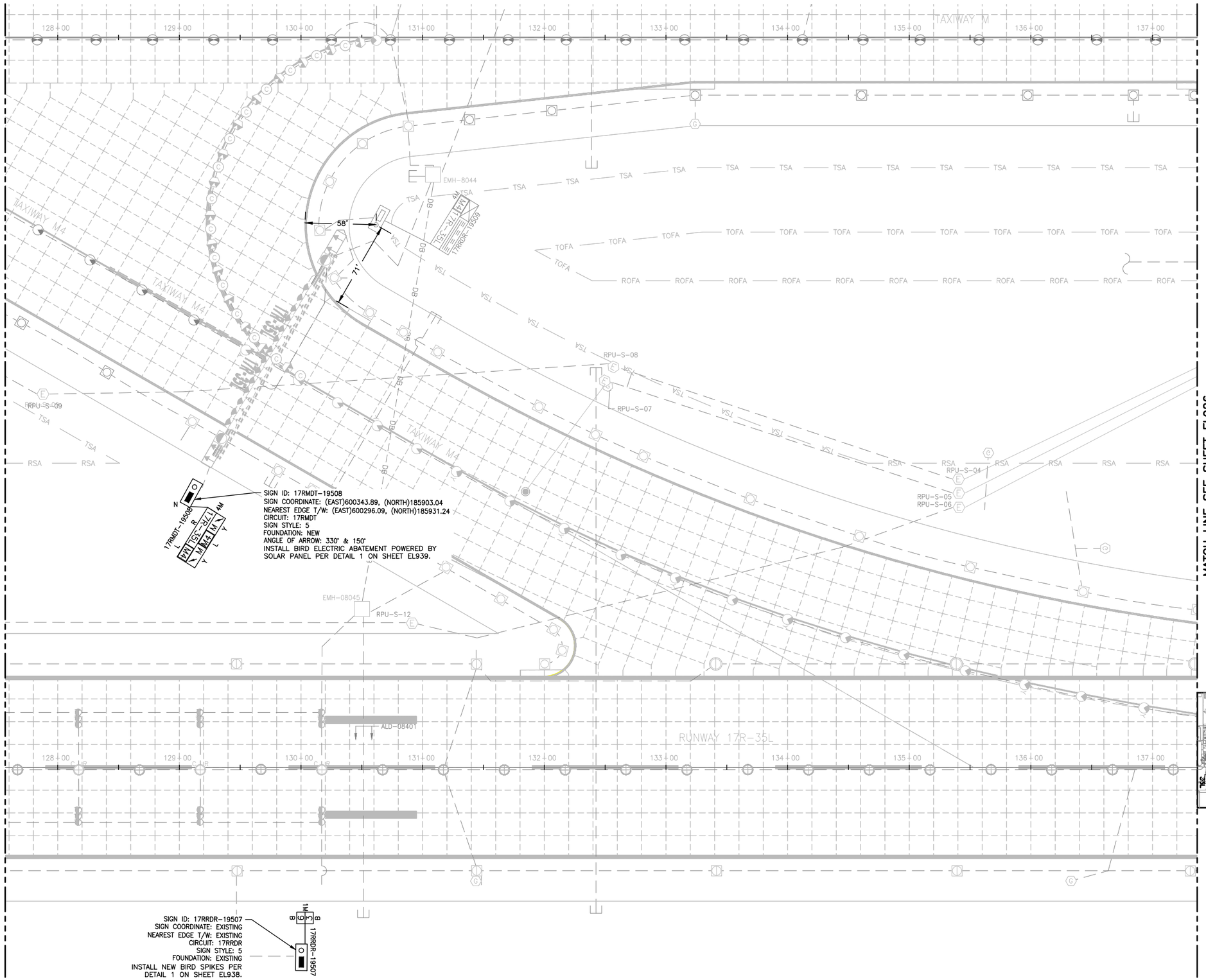

NOTES:

1. SIGN LENGTHS MAY VARY DEPENDING ON MANUFACTURER.
2. CONFIRM LENGTH WITH MANUFACTURER PRIOR TO BID AND ADJUST FOUNDATION ACCORDINGLY.
3. PROVIDE UTILITY LOCATION & POT–HOLING OF LOCATION OF NEW SIGN. SURVEY RESULTS.
4. PROVIDE SHOP DRAWING SHOWING LOCATION OF PROPOSED SIGN & SURVEYED UTILITIES. OBTAIN APPROVAL FROM DENVER PROJECT MANAGER, PRIOR TO EXCAVATION.
5. BLUE STAKE THE 4 CORNERS OF SIGN AND FOUNDATION AND DEFINED EDGE OF T/W TO OBTAIN ENGINEER'S APPROVAL PRIOR TO EXCAVATION. THIS APPLIES TO ALL NEW SIGNS.
6. THE DESIGNATIONS OF SIGNS TO BE INSTALLED ARE:

   R = LIGHTED MANDATORY SIGN (WHITE LEGEND ON RED BACKGROUND)

   L = LIGHTED TAXIWAY AND RUNWAY LOCATION SIGN (YELLOW LEGEND AND BORDER ON BLACK BACKGROUND)

   Y = LIGHTED DIRECTION, DESTINATION & BOUNDARY SIGNS (BLACK LEGEND ON YELLOW BACKGROUND)

   B = LIGHTED RUNWAY DISTANCE REMAINING SIGN (WHITE LEGEND ON BLACK BACKGROUND)
7. THE ANGLE OF THE ARROW OF THE SIGN IS GIVEN ACCORDING TO THE BELOW CONVENTION. ANGLE IN PARENTHESIS DENOTES ARROW ANGLE IF NOT 0°, 90°, 180°, OR 270°.

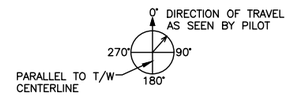

8. ACTUAL NUMBER OF MODULES/WIDTH TO BE USED FOR EACH SIGN WILL BE DETERMINED BY SIGN MANUFACTURER.
   1M = 1 MODULE
   2M = 2 MODULES
   3M = 3 MODULES
   4M = 4 MODULES
9. SIGN COORDINATE IS DEFINED AS THE COORDINATE TO THE NEAREST EDGE OF SIGN AND NOT BASE CAN AND NOT FOUNDATION.
10. SIGN LOCATION & ALIGNMENT: INSTALL SIGN SO THAT IT IS IN LINE WITH AN IMAGINARY LINE STRETCHING BETWEEN SIGN COORDINATE & DEFINED EDGE OF TAXIWAY. LOCATION SHALL BE SO THAT THE SIGN COORDINATE IS AT THE NEAREST EDGE OF SIGN.
11. SIGN CHARACTERISTICS:
   – ALL NEW SIGNS SHALL BE LED.
   – RDR SIGNS MUST BE SIZE 4
   – ALL OTHER GUIDANCE SIGNS MUST BE SIZE 3.
   – SIGNS MUST BE MODE 2.
12. INSTALL BIRD ABATEMENT PROTECTION ON SIGNS WITH DESIGNATION AS SHOWN. COST FOR BIRD ABATEMENT SHALL BE BID UNDER BID ITEM L–128.

40' 20' 0 40'

NORTH

KEY PLAN

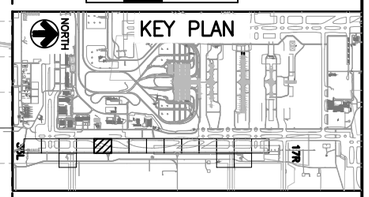

COLORADO LICENSED
DIXON LEAN
52246
2/15/19
PROFESSIONAL ENGINEER

CITY & COUNTY of DENVER

DENVER INTERNATIONAL AIRPORT

LEAN ENGINEERING

RUNWAY 17R-35L COMPLEX PAVEMENT REHABILITATION PACKAGE 1

ISSUE RECORD

NO.	BY	PURPOSE	DATE	CKD
1	LE	50% DESIGN	09/14/18	DL
2	LE	90% DESIGN	10/26/18	DL
3	LE	BID	12/26/18	DL
4	LE	CONSTRUCTION	2/15/19	DL

SCALE: AS INDICATED

DATE: FEBRUARY 15, 2019

DRAWN BY: KV

CHECKED BY: JA

FAA AIP NO:

WORK BREAKDOWN NO.

DESIGN CONTRACT NO. 201735882

CONST. CONTRACT NO. 201846271

VOLUME NO.

SHEET TITLE

SIGNAGE PLAN (5 OF 17)

SHEET NO. EL925

382 OF 396

CADD FILE NO. _201735882-B1EELP-1356

D:\dropbox (lean photometrics)\active projects\1571801a rah den 17r-35l reconstruction\01 drawings\working drawings\Sheets_201735882-B1EELP-1356.dwg Feb 12, 2019 – 5:40pm Kat

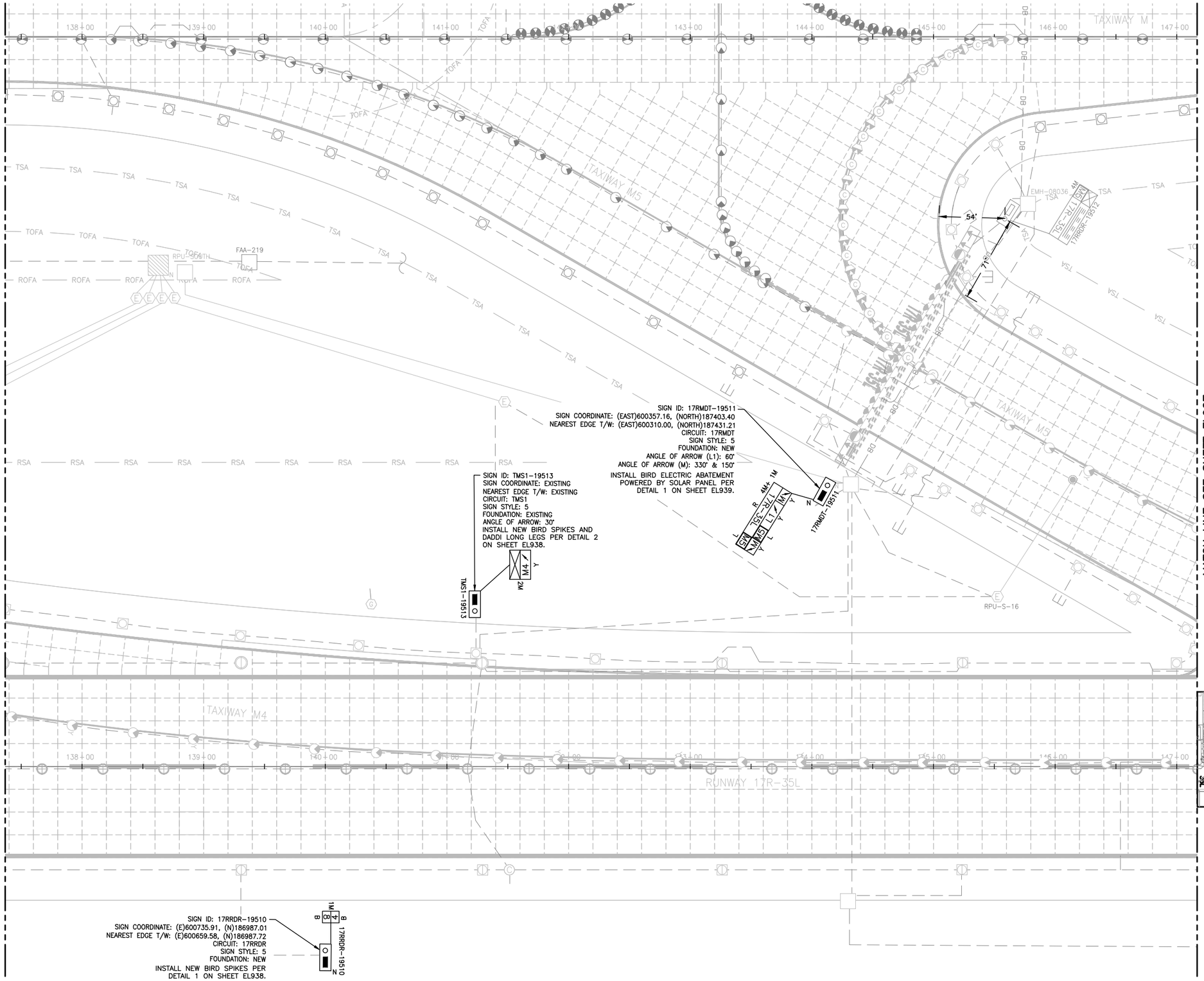

NOTES:

1. SIGN LENGTHS MAY VARY DEPENDING ON MANUFACTURER.
2. CONFIRM LENGTH WITH MANUFACTURER PRIOR TO BID AND ADJUST FOUNDATION ACCORDINGLY.
3. PROVIDE UTILITY LOCATION & POT-HOLING OF LOCATION OF NEW SIGN. SURVEY RESULTS.
4. PROVIDE SHOP DRAWING SHOWING LOCATION OF PROPOSED SIGN & SURVEYED UTILITIES. OBTAIN APPROVAL FROM DENVER PROJECT MANAGER, PRIOR TO EXCAVATION.
5. BLUE STAKE THE 4 CORNERS OF SIGN AND FOUNDATION AND DEFINED EDGE OF T/W TO OBTAIN ENGINEER'S APPROVAL PRIOR TO EXCAVATION. THIS APPLIES TO ALL NEW SIGNS.
6. THE DESIGNATIONS OF SIGNS TO BE INSTALLED ARE:

   R = LIGHTED MANDATORY SIGN (WHITE LEGEND ON RED BACKGROUND)

   L = LIGHTED TAXIWAY AND RUNWAY LOCATION SIGN (YELLOW LEGEND AND BORDER ON BLACK BACKGROUND)

   Y = LIGHTED DIRECTION, DESTINATION & BOUNDARY SIGNS (BLACK LEGEND ON YELLOW BACKGROUND)

   B = LIGHTED RUNWAY DISTANCE REMAINING SIGN (WHITE LEGEND ON BLACK BACKGROUND)
7. THE ANGLE OF THE ARROW OF THE SIGN IS GIVEN ACCORDING TO THE BELOW CONVENTION. ANGLE IN PARENTHESIS DENOTES ARROW ANGLE IF NOT 0°, 90°, 180°, OR 270°.

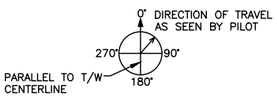

8. ACTUAL NUMBER OF MODULES/WIDTH TO BE USED FOR EACH SIGN WILL BE DETERMINED BY SIGN MANUFACTURER.
   1M = 1 MODULE
   2M = 2 MODULES
   3M = 3 MODULES
   4M = 4 MODULES
9. SIGN COORDINATE IS DEFINED AS THE COORDINATE TO THE NEAREST EDGE OF SIGN AND NOT BASE CAN AND NOT FOUNDATION.
10. SIGN LOCATION & ALIGNMENT: INSTALL SIGN SO THAT IT IS IN LINE WITH AN IMAGINARY LINE STRETCHING BETWEEN SIGN COORDINATE & DEFINED EDGE OF TAXIWAY. LOCATION SHALL BE SO THAT THE SIGN COORDINATE IS AT THE NEAREST EDGE OF SIGN.
11. SIGN CHARACTERISTICS:
   - ALL NEW SIGNS SHALL BE LED.
   - RDR SIGNS MUST BE SIZE 4
   - ALL OTHER GUIDANCE SIGNS MUST BE SIZE 3.
   - SIGNS MUST BE MODE 2.
12. INSTALL BIRD ABATEMENT PROTECTION ON SIGNS WITH DESIGNATION AS SHOWN. COST FOR BIRD ABATEMENT SHALL BE BID UNDER BID ITEM L-128.

40' 20' 0 40'

NORTH

KEY PLAN

COLORADO LICENSED
AARON LEAN
52246
2/15/19
PROFESSIONAL ENGINEER

CITY & COUNTY of DENVER

DENVER INTERNATIONAL AIRPORT

LEAN ENGINEERING

RUNWAY 17R-35L COMPLEX PAVEMENT REHABILITATION PACKAGE 1

ISSUE RECORD

NO.	BY	PURPOSE	DATE	CKD
1	LE	50% DESIGN	09/14/18	DL
2	LE	90% DESIGN	10/26/18	DL
3	LE	BID	12/26/18	DL
4	LE	CONSTRUCTION	2/15/19	DL

SCALE: AS INDICATED

DATE: FEBRUARY 15, 2019

DRAWN BY: KV

CHECKED BY: JA

FAA AIP NO:

WORK BREAKDOWN NO.

DESIGN CONTRACT NO. 201735882

CONST. CONTRACT NO. 201846271

VOLUME NO.

SHEET TITLE

SIGNAGE PLAN (6 OF 17)

SHEET NO. EL926

383 OF 396

CADD FILE NO. _201735882-B1EELP-1356

D:\dropbox (lean photometrics)\active projects\1571801a rah den 17r-35l reconstruction\01 drawings\working drawings\Sheets_201735882-B1EELP-1356.dwg Feb 12, 2019 - 5:40pm Kat

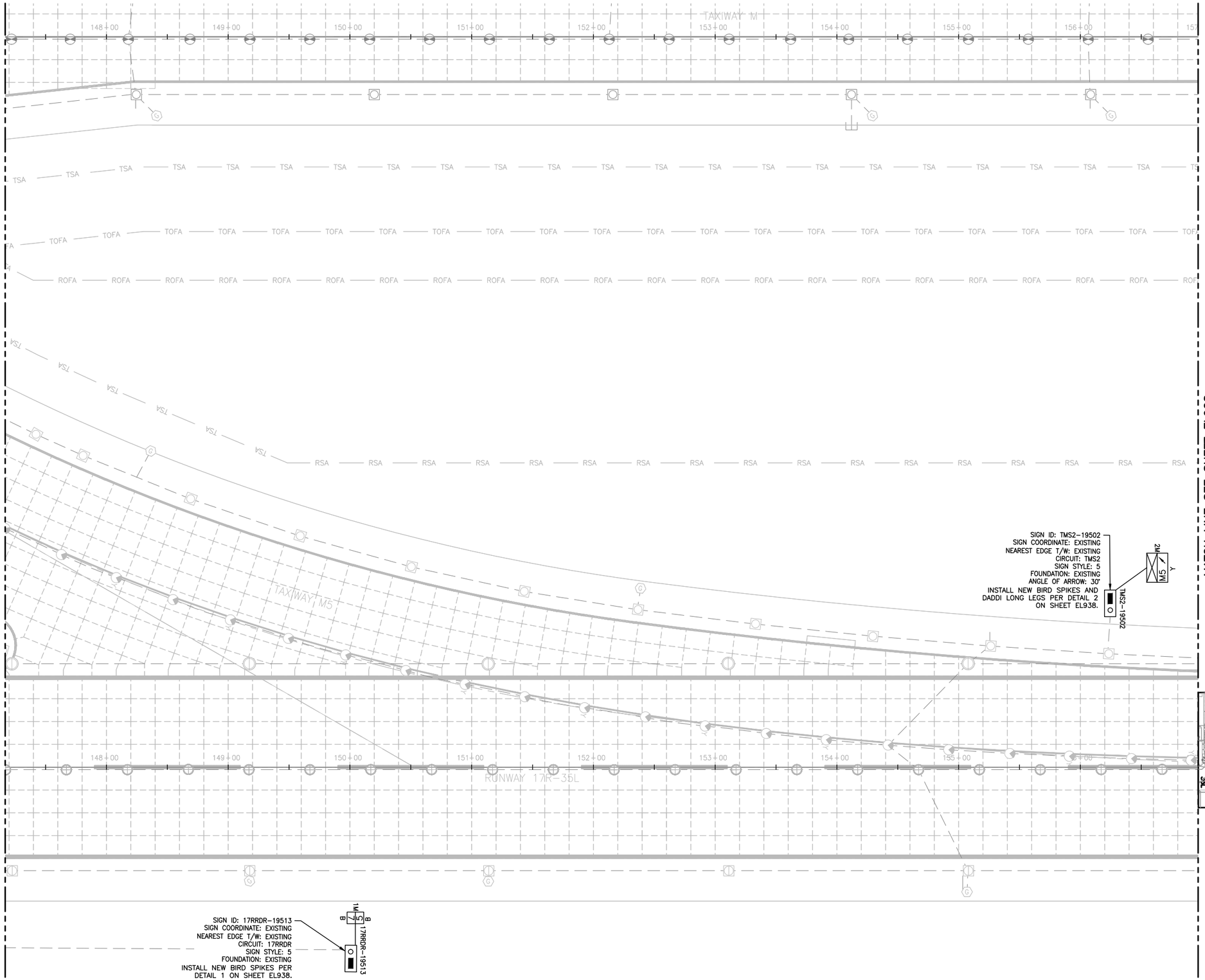

NOTES:

1. SIGN LENGTHS MAY VARY DEPENDING ON MANUFACTURER.
2. CONFIRM LENGTH WITH MANUFACTURER PRIOR TO BID AND ADJUST FOUNDATION ACCORDINGLY.
3. PROVIDE UTILITY LOCATION & POT-HOLING OF LOCATION OF NEW SIGN. SURVEY RESULTS.
4. PROVIDE SHOP DRAWING SHOWING LOCATION OF PROPOSED SIGN & SURVEYED UTILITIES. OBTAIN APPROVAL FROM DENVER PROJECT MANAGER, PRIOR TO EXCAVATION.
5. BLUE STAKE THE 4 CORNERS OF SIGN AND FOUNDATION AND DEFINED EDGE OF T/W TO OBTAIN ENGINEER'S APPROVAL PRIOR TO EXCAVATION. THIS APPLIES TO ALL NEW SIGNS.
6. THE DESIGNATIONS OF SIGNS TO BE INSTALLED ARE:

   R = LIGHTED MANDATORY SIGN (WHITE LEGEND ON RED BACKGROUND)

   L = LIGHTED TAXIWAY AND RUNWAY LOCATION SIGN (YELLOW LEGEND AND BORDER ON BLACK BACKGROUND)

   Y = LIGHTED DIRECTION, DESTINATION & BOUNDARY SIGNS (BLACK LEGEND ON YELLOW BACKGROUND)

   B = LIGHTED RUNWAY DISTANCE REMAINING SIGN (WHITE LEGEND ON BLACK BACKGROUND)
7. THE ANGLE OF THE ARROW OF THE SIGN IS GIVEN ACCORDING TO THE BELOW CONVENTION. ANGLE IN PARENTHESIS DENOTES ARROW ANGLE IF NOT 0°, 90°, 180°, OR 270°.

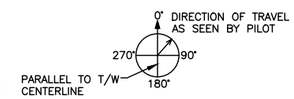

8. ACTUAL NUMBER OF MODULES/WIDTH TO BE USED FOR EACH SIGN WILL BE DETERMINED BY SIGN MANUFACTURER.
   1M = 1 MODULE
   2M = 2 MODULES
   3M = 3 MODULES
   4M = 4 MODULES
9. SIGN COORDINATE IS DEFINED AS THE COORDINATE TO THE NEAREST EDGE OF SIGN AND NOT BASE CAN AND NOT FOUNDATION.
10. SIGN LOCATION & ALIGNMENT:
    INSTALL SIGN SO THAT IT IS IN LINE WITH AN IMAGINARY LINE STRETCHING BETWEEN SIGN COORDINATE & DEFINED EDGE OF TAXIWAY. LOCATION SHALL BE SO THAT THE SIGN COORDINATE IS AT THE NEAREST EDGE OF SIGN.
11. SIGN CHARACTERISTICS:
    - ALL NEW SIGNS SHALL BE LED.
    - RDR SIGNS MUST BE SIZE 4
    - ALL OTHER GUIDANCE SIGNS MUST BE SIZE 3.
    - SIGNS MUST BE MODE 2.
12. INSTALL BIRD ABATEMENT PROTECTION ON SIGNS WITH DESIGNATION AS SHOWN. COST FOR BIRD ABATEMENT SHALL BE BID UNDER BID ITEM L-128.

40' 20' 0 40'

NORTH

KEY PLAN

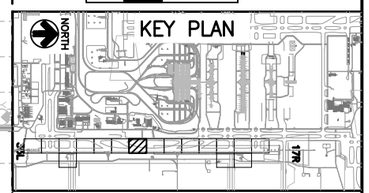

COLORADO LICENSED
BARON LEAN
52246
2/15/19
PROFESSIONAL ENGINEER

CITY & COUNTY of DENVER

DENVER INTERNATIONAL AIRPORT

LEAN ENGINEERING

RUNWAY 17R-35L COMPLEX PAVEMENT REHABILITATION PACKAGE 1

ISSUE RECORD

NO.	BY	PURPOSE	DATE	CKD
1	LE	50% DESIGN	09/14/18	DL
2	LE	90% DESIGN	10/26/18	DL
3	LE	BID	12/26/18	DL
4	LE	CONSTRUCTION	2/15/19	DL

SCALE: AS INDICATED

DATE: FEBRUARY 15, 2019

DRAWN BY: KV

CHECKED BY: JA

FAA AIP NO:

WORK BREAKDOWN NO.

DESIGN CONTRACT NO. 201735882

CONST. CONTRACT NO. 201846271

VOLUME NO.

SHEET TITLE

SIGNAGE PLAN (7 OF 17)

SHEET NO. EL927

384 OF 396

CADD FILE NO. _201735882-B1EELP-1356

D:\dropbox (lean photometrics)\active projects\1571801a rah den 17r-35l reconstruction\01 drawings\working drawings\Sheets_201735882-B1EELP-1356.dwg Feb 12, 2019 - 5:40pm kat

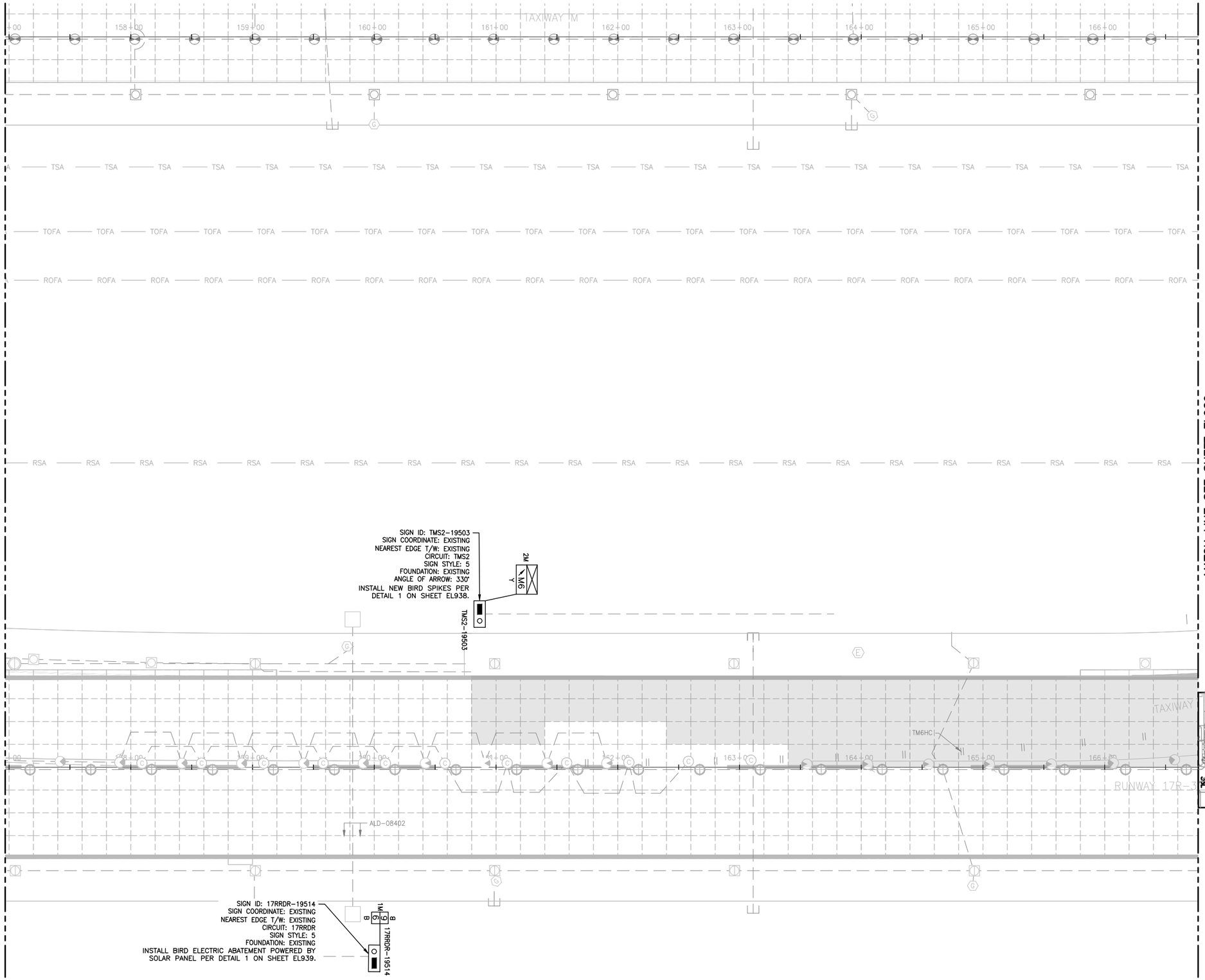

NOTES:

1. SIGN LENGTHS MAY VARY DEPENDING ON MANUFACTURER.
2. CONFIRM LENGTH WITH MANUFACTURER PRIOR TO BID AND ADJUST FOUNDATION ACCORDINGLY.
3. PROVIDE UTILITY LOCATION & POT-HOLING OF LOCATION OF NEW SIGN. SURVEY RESULTS.
4. PROVIDE SHOP DRAWING SHOWING LOCATION OF PROPOSED SIGN & SURVEYED UTILITIES. OBTAIN APPROVAL FROM DENVER PROJECT MANAGER, PRIOR TO EXCAVATION.
5. BLUE STAKE THE 4 CORNERS OF SIGN AND FOUNDATION AND DEFINED EDGE OF T/W TO OBTAIN ENGINEER'S APPROVAL PRIOR TO EXCAVATION. THIS APPLIES TO ALL NEW SIGNS.
6. THE DESIGNATIONS OF SIGNS TO BE INSTALLED ARE:

   R = LIGHTED MANDATORY SIGN (WHITE LEGEND ON RED BACKGROUND)

   L = LIGHTED TAXIWAY AND RUNWAY LOCATION SIGN (YELLOW LEGEND AND BORDER ON BLACK BACKGROUND)

   Y = LIGHTED DIRECTION, DESTINATION & BOUNDARY SIGNS (BLACK LEGEND ON YELLOW BACKGROUND)

   B = LIGHTED RUNWAY DISTANCE REMAINING SIGN (WHITE LEGEND ON BLACK BACKGROUND)
7. THE ANGLE OF THE ARROW OF THE SIGN IS GIVEN ACCORDING TO THE BELOW CONVENTION. ANGLE IN PARENTHESIS DENOTES ARROW ANGLE IF NOT 0°, 90°, 180°, OR 270°.

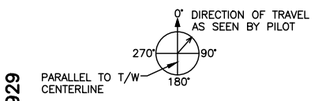

8. ACTUAL NUMBER OF MODULES/WIDTH TO BE USED FOR EACH SIGN WILL BE DETERMINED BY SIGN MANUFACTURER.
   1M = 1 MODULE
   2M = 2 MODULES
   3M = 3 MODULES
   4M = 4 MODULES
9. SIGN COORDINATE IS DEFINED AS THE COORDINATE TO THE NEAREST EDGE OF SIGN AND NOT BASE CAN AND NOT FOUNDATION.
10. SIGN LOCATION & ALIGNMENT:
    INSTALL SIGN SO THAT IT IS IN LINE WITH AN IMAGINARY LINE STRETCHING BETWEEN SIGN COORDINATE & DEFINED EDGE OF TAXIWAY. LOCATION SHALL BE SO THAT THE SIGN COORDINATE IS AT THE NEAREST EDGE OF SIGN.
11. SIGN CHARACTERISTICS:
    - ALL NEW SIGNS SHALL BE LED.
    - RDR SIGNS MUST BE SIZE 4
    - ALL OTHER GUIDANCE SIGNS MUST BE SIZE 3.
    - SIGNS MUST BE MODE 2.
12. INSTALL BIRD ABATEMENT PROTECTION ON SIGNS WITH DESIGNATION AS SHOWN. COST FOR BIRD ABATEMENT SHALL BE BID UNDER BID ITEM L-128.

40' 20' 0 40'

NORTH

KEY PLAN

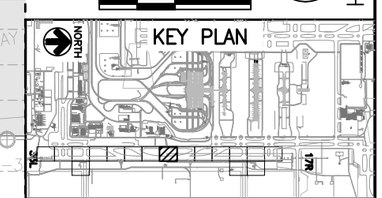

COLORADO LICENSED
DORON LEAN
52246
2/15/19
PROFESSIONAL ENGINEER

CITY & COUNTY of DENVER

DENVER INTERNATIONAL AIRPORT

LEAN ENGINEERING

RUNWAY 17R-35L COMPLEX PAVEMENT REHABILITATION PACKAGE 1

ISSUE RECORD

NO.	BY	PURPOSE	DATE	CKD
1	LE	50% DESIGN	09/14/18	DL
2	LE	90% DESIGN	10/26/18	DL
3	LE	BID	12/26/18	DL
4	LE	CONSTRUCTION	2/15/19	DL

SCALE: AS INDICATED

DATE: FEBRUARY 15, 2019

DRAWN BY: KV

CHECKED BY: JA

FAA AIP NO:

WORK BREAKDOWN NO.

DESIGN CONTRACT NO. 201735882

CONST. CONTRACT NO. 201846271

VOLUME NO.

SHEET TITLE

SIGNAGE PLAN (8 OF 17)

SHEET NO. EL928

385 OF 396

CADD FILE NO. _201735882-B1EELP-1356

D:\dropbox (lean photometrics)\active projects\1571801a rah den 17r-35l reconstruction\01 drawings\working drawings\Sheets_201735882-B1EELP-1356.dwg Feb 12, 2019 - 5:41pm Kat

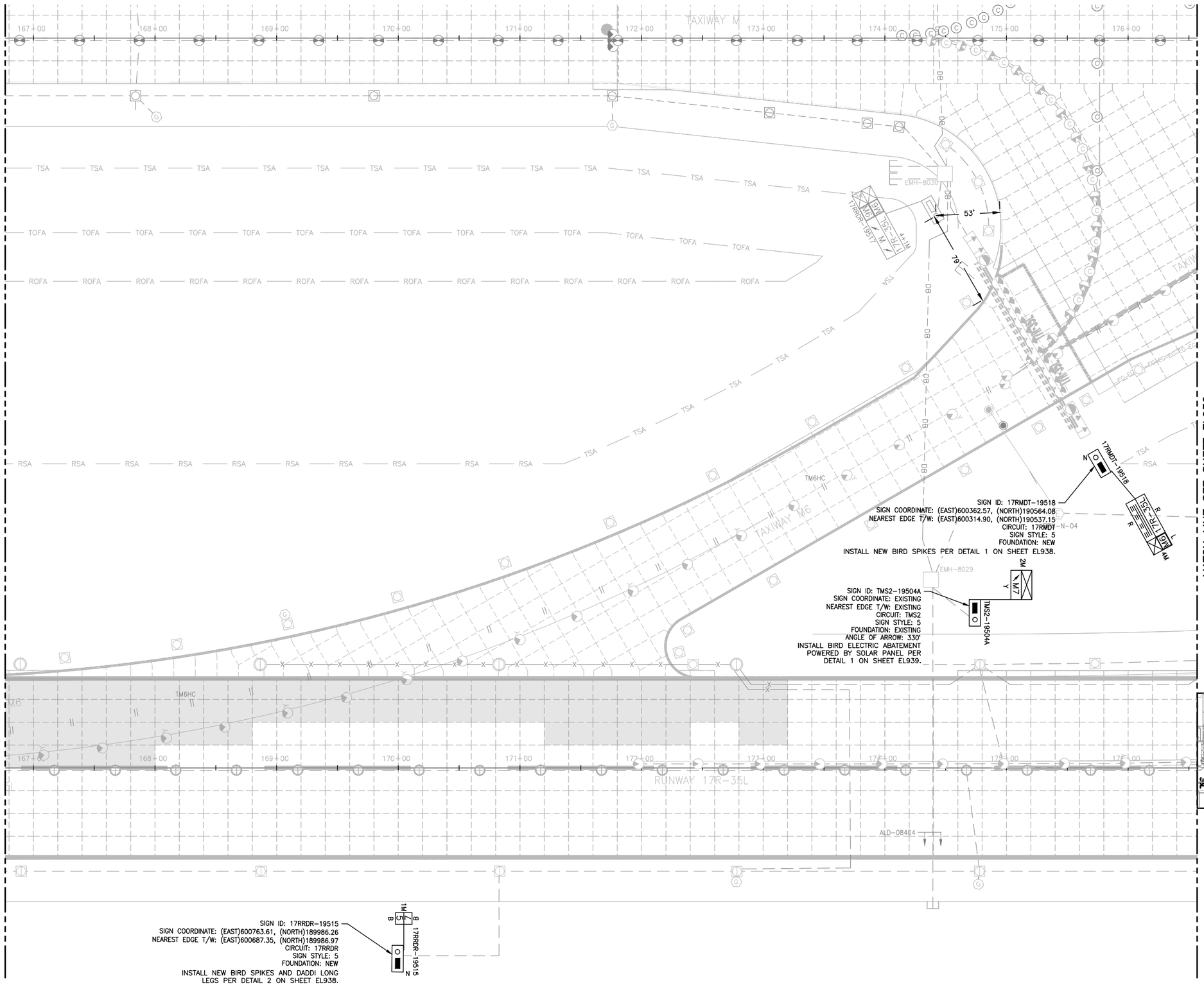

NOTES:

1. SIGN LENGTHS MAY VARY DEPENDING ON MANUFACTURER.
2. CONFIRM LENGTH WITH MANUFACTURER PRIOR TO BID AND ADJUST FOUNDATION ACCORDINGLY.
3. PROVIDE UTILITY LOCATION & POT-HOLING OF LOCATION OF NEW SIGN. SURVEY RESULTS.
4. PROVIDE SHOP DRAWING SHOWING LOCATION OF PROPOSED SIGN & SURVEYED UTILITIES. OBTAIN APPROVAL FROM DENVER PROJECT MANAGER, PRIOR TO EXCAVATION.
5. BLUE STAKE THE 4 CORNERS OF SIGN AND FOUNDATION AND DEFINED EDGE OF T/W TO OBTAIN ENGINEER'S APPROVAL PRIOR TO EXCAVATION. THIS APPLIES TO ALL NEW SIGNS.
6. THE DESIGNATIONS OF SIGNS TO BE INSTALLED ARE:

   R = LIGHTED MANDATORY SIGN (WHITE LEGEND ON RED BACKGROUND)

   L = LIGHTED TAXIWAY AND RUNWAY LOCATION SIGN (YELLOW LEGEND AND BORDER ON BLACK BACKGROUND)

   Y = LIGHTED DIRECTION, DESTINATION & BOUNDARY SIGNS (BLACK LEGEND ON YELLOW BACKGROUND)

   B = LIGHTED RUNWAY DISTANCE REMAINING SIGN (WHITE LEGEND ON BLACK BACKGROUND)
7. THE ANGLE OF THE ARROW OF THE SIGN IS GIVEN ACCORDING TO THE BELOW CONVENTION. ANGLE IN PARENTHESIS DENOTES ARROW ANGLE IF NOT 0°, 90°, 180°, OR 270°.

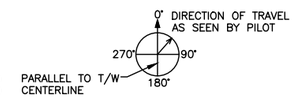

8. ACTUAL NUMBER OF MODULES/WIDTH TO BE USED FOR EACH SIGN WILL BE DETERMINED BY SIGN MANUFACTURER.
   1M = 1 MODULE
   2M = 2 MODULES
   3M = 3 MODULES
   4M = 4 MODULES
9. SIGN COORDINATE IS DEFINED AS THE COORDINATE TO THE NEAREST EDGE OF SIGN AND NOT BASE CAN AND NOT FOUNDATION.
10. SIGN LOCATION & ALIGNMENT: INSTALL SIGN SO THAT IT IS IN LINE WITH AN IMAGINARY LINE STRETCHING BETWEEN SIGN COORDINATE & DEFINED EDGE OF TAXIWAY. LOCATION SHALL BE SO THAT THE SIGN COORDINATE IS AT THE NEAREST EDGE OF SIGN.
11. SIGN CHARACTERISTICS:
   - ALL NEW SIGNS SHALL BE LED.
   - RDR SIGNS MUST BE SIZE 4
   - ALL OTHER GUIDANCE SIGNS MUST BE SIZE 3.
   - SIGNS MUST BE MODE 2.
12. INSTALL BIRD ABATEMENT PROTECTION ON SIGNS WITH DESIGNATION AS SHOWN. COST FOR BIRD ABATEMENT SHALL BE BID UNDER BID ITEM L-128.

KEY PLAN

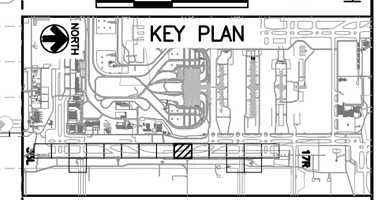

COLORADO LICENSED
DORON LEAN
52246
2/15/19
PROFESSIONAL ENGINEER

CITY & COUNTY of DENVER

DENVER INTERNATIONAL AIRPORT

LEAN ENGINEERING

RUNWAY 17R-35L COMPLEX PAVEMENT REHABILITATION PACKAGE 1

ISSUE RECORD

NO.	BY	PURPOSE	DATE	CKD
1	LE	50% DESIGN	09/14/18	DL
2	LE	90% DESIGN	10/26/18	DL
3	LE	BID	12/26/18	DL
4	LE	CONSTRUCTION	2/15/19	DL

SCALE: AS INDICATED

DATE: FEBRUARY 15, 2019

DRAWN BY: KV

CHECKED BY: JA

FAA AIP NO:

WORK BREAKDOWN NO.

DESIGN CONTRACT NO. 201735882

CONST. CONTRACT NO. 201846271

VOLUME NO.

SHEET TITLE

SIGNAGE PLAN (9 OF 17)

SHEET NO. EL929

386 OF 396

CADD FILE NO. _201735882-B1EELP-1356

D:\dropbox (lean photometrics)\active projects\1571801a rah den 17r-35l reconstruction\01 drawings\working drawings\Sheets_201735882-B1EELP-1356.dwg Feb 12, 2019 - 5:41pm Kat

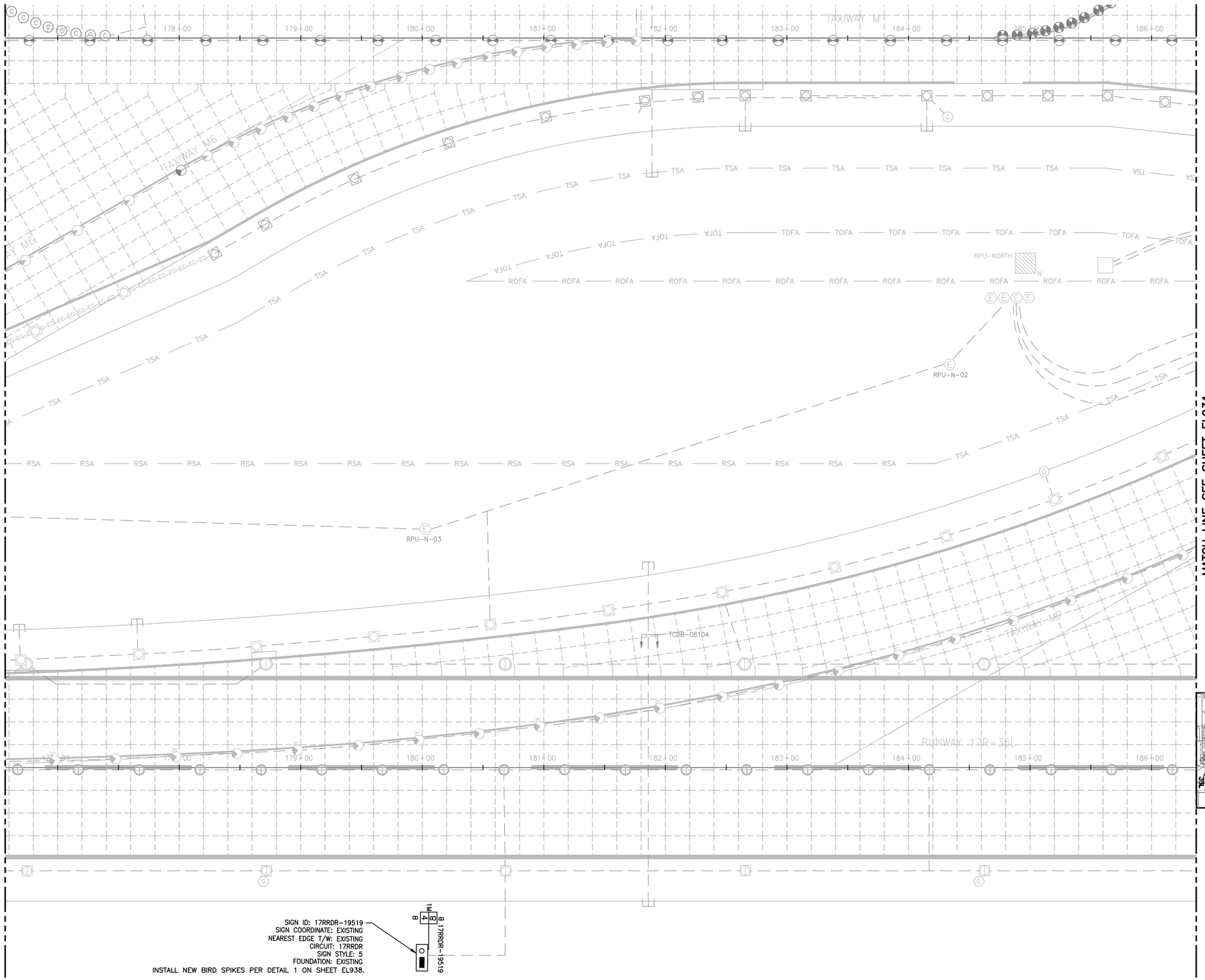

NOTES:

1. SIGN LENGTHS MAY VARY DEPENDING ON MANUFACTURER.
2. CONFIRM LENGTH WITH MANUFACTURER PRIOR TO BID AND ADJUST FOUNDATION ACCORDINGLY.
3. PROVIDE UTILITY LOCATION & POT-HOLING OF LOCATION OF NEW SIGN. SURVEY RESULTS.
4. PROVIDE SHOP DRAWING SHOWING LOCATION OF PROPOSED SIGN & SURVEYED UTILITIES. OBTAIN APPROVAL FROM DENVER PROJECT MANAGER, PRIOR TO EXCAVATION.
5. BLUE STAKE THE 4 CORNERS OF SIGN AND FOUNDATION AND DEFINED EDGE OF T/W TO OBTAIN ENGINEER'S APPROVAL PRIOR TO EXCAVATION. THIS APPLIES TO ALL NEW SIGNS.
6. THE DESIGNATIONS OF SIGNS TO BE INSTALLED ARE:

   R = LIGHTED MANDATORY SIGN (WHITE LEGEND ON RED BACKGROUND)

   L = LIGHTED TAXIWAY AND RUNWAY LOCATION SIGN (YELLOW LEGEND AND BORDER ON BLACK BACKGROUND)

   Y = LIGHTED DIRECTION, DESTINATION & BOUNDARY SIGNS (BLACK LEGEND ON YELLOW BACKGROUND)

   B = LIGHTED RUNWAY DISTANCE REMAINING SIGN (WHITE LEGEND ON BLACK BACKGROUND)
7. THE ANGLE OF THE ARROW OF THE SIGN IS GIVEN ACCORDING TO THE BELOW CONVENTION. ANGLE IN PARENTHESIS DENOTES ARROW ANGLE IF NOT 0°, 90°, 180°, OR 270°.

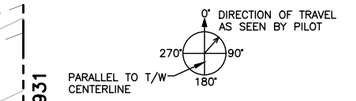

8. ACTUAL NUMBER OF MODULES/WIDTH TO BE USED FOR EACH SIGN WILL BE DETERMINED BY SIGN MANUFACTURER.
   1M = 1 MODULE
   2M = 2 MODULES
   3M = 3 MODULES
   4M = 4 MODULES
9. SIGN COORDINATE IS DEFINED AS THE COORDINATE TO THE NEAREST EDGE OF SIGN AND NOT BASE CAN AND NOT FOUNDATION.
10. SIGN LOCATION & ALIGNMENT:
    INSTALL SIGN SO THAT IT IS IN LINE WITH AN IMAGINARY LINE STRETCHING BETWEEN SIGN COORDINATE & DEFINED EDGE OF TAXIWAY. LOCATION SHALL BE SO THAT THE SIGN COORDINATE IS AT THE NEAREST EDGE OF SIGN.
11. SIGN CHARACTERISTICS:
    - ALL NEW SIGNS SHALL BE LED.
    - RDR SIGNS MUST BE SIZE 4
    - ALL OTHER GUIDANCE SIGNS MUST BE SIZE 3.
    - SIGNS MUST BE MODE 2.
12. INSTALL BIRD ABATEMENT PROTECTION ON SIGNS WITH DESIGNATION AS SHOWN. COST FOR BIRD ABATEMENT SHALL BE BID UNDER BID ITEM L-128.

40' 20' 0 40'

NORTH

KEY PLAN

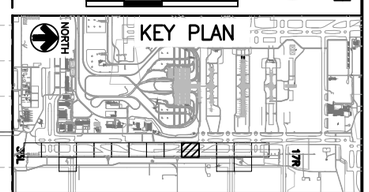

COLORADO LICENSED
DORON LEAN
52246
2/15/19
PROFESSIONAL ENGINEER

CITY & COUNTY of DENVER

DENVER INTERNATIONAL AIRPORT

LEAN ENGINEERING

RUNWAY 17R-35L COMPLEX PAVEMENT REHABILITATION PACKAGE 1

ISSUE RECORD

NO.	BY	PURPOSE	DATE	CKD
1	LE	50% DESIGN	09/14/18	DL
2	LE	90% DESIGN	10/26/18	DL
3	LE	BID	12/26/18	DL
4	LE	CONSTRUCTION	2/15/19	DL

SCALE: AS INDICATED

DATE: FEBRUARY 15, 2019

DRAWN BY: KV

CHECKED BY: JA

FAA AIP NO:

WORK BREAKDOWN NO.

DESIGN CONTRACT NO. 201735882

CONST. CONTRACT NO. 201846271

VOLUME NO.

SHEET TITLE

SIGNAGE PLAN (10 OF 17)

SHEET NO. EL930

387 OF 396

CADD FILE NO. _201735882-B1EELP-1356

B:\dropbox (lean photometrics)\active projects\1571801a rah den 17r-35l reconstruction\01 drawings\working drawings\Sheets_201735882-B1EELP-1356.dwg Feb 12, 2019 - 5:41pm Kat

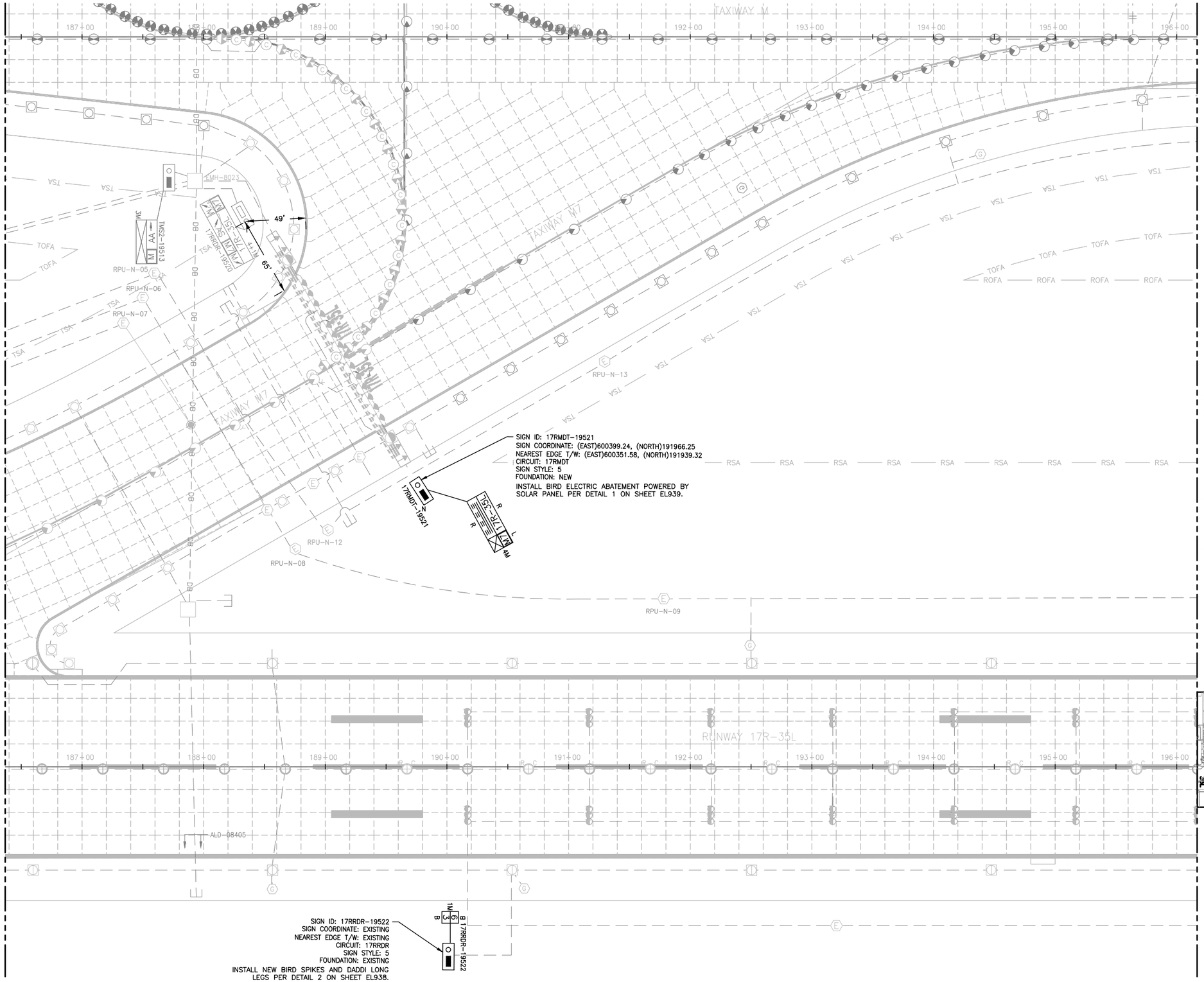

NOTES:

1. SIGN LENGTHS MAY VARY DEPENDING ON MANUFACTURER.
2. CONFIRM LENGTH WITH MANUFACTURER PRIOR TO BID AND ADJUST FOUNDATION ACCORDINGLY.
3. PROVIDE UTILITY LOCATION & POT–HOLING OF LOCATION OF NEW SIGN. SURVEY RESULTS.
4. PROVIDE SHOP DRAWING SHOWING LOCATION OF PROPOSED SIGN & SURVEYED UTILITIES. OBTAIN APPROVAL FROM DENVER PROJECT MANAGER, PRIOR TO EXCAVATION.
5. BLUE STAKE THE 4 CORNERS OF SIGN AND FOUNDATION AND DEFINED EDGE OF T/W TO OBTAIN ENGINEER'S APPROVAL PRIOR TO EXCAVATION. THIS APPLIES TO ALL NEW SIGNS.
6. THE DESIGNATIONS OF SIGNS TO BE INSTALLED ARE:

   R = LIGHTED MANDATORY SIGN (WHITE LEGEND ON RED BACKGROUND)

   L = LIGHTED TAXIWAY AND RUNWAY LOCATION SIGN (YELLOW LEGEND AND BORDER ON BLACK BACKGROUND)

   Y = LIGHTED DIRECTION, DESTINATION & BOUNDARY SIGNS (BLACK LEGEND ON YELLOW BACKGROUND)

   B = LIGHTED RUNWAY DISTANCE REMAINING SIGN (WHITE LEGEND ON BLACK BACKGROUND)
7. THE ANGLE OF THE ARROW OF THE SIGN IS GIVEN ACCORDING TO THE BELOW CONVENTION. ANGLE IN PARENTHESIS DENOTES ARROW ANGLE IF NOT 0°, 90°, 180°, OR 270°.

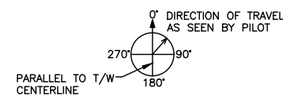

8. ACTUAL NUMBER OF MODULES/WIDTH TO BE USED FOR EACH SIGN WILL BE DETERMINED BY SIGN MANUFACTURER.
   1M = 1 MODULE
   2M = 2 MODULES
   3M = 3 MODULES
   4M = 4 MODULES
9. SIGN COORDINATE IS DEFINED AS THE COORDINATE TO THE NEAREST EDGE OF SIGN AND NOT BASE CAN AND NOT FOUNDATION.
10. SIGN LOCATION & ALIGNMENT:
    INSTALL SIGN SO THAT IT IS IN LINE WITH AN IMAGINARY LINE STRETCHING BETWEEN SIGN COORDINATE & DEFINED EDGE OF TAXIWAY. LOCATION SHALL BE SO THAT THE SIGN COORDINATE IS AT THE NEAREST EDGE OF SIGN.
11. SIGN CHARACTERISTICS:
    – ALL NEW SIGNS SHALL BE LED.
    – RDR SIGNS MUST BE SIZE 4
    – ALL OTHER GUIDANCE SIGNS MUST BE SIZE 3.
    – SIGNS MUST BE MODE 2.
12. INSTALL BIRD ABATEMENT PROTECTION ON SIGNS WITH DESIGNATION AS SHOWN. COST FOR BIRD ABATEMENT SHALL BE BID UNDER BID ITEM L–128.

40' 20' 0 40'

NORTH

KEY PLAN

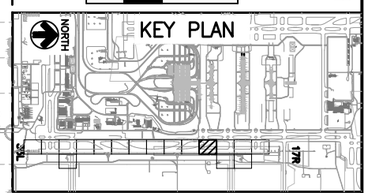

COLORADO LICENSED
BARON LEAN
52246
2/15/19
PROFESSIONAL ENGINEER

CITY & COUNTY of DENVER

DENVER INTERNATIONAL AIRPORT

LEAN ENGINEERING

RUNWAY 17R-35L COMPLEX PAVEMENT REHABILITATION PACKAGE 1

ISSUE RECORD

NO.	BY	PURPOSE	DATE	CKD
1	LE	50% DESIGN	09/14/18	DL
2	LE	90% DESIGN	10/26/18	DL
3	LE	BID	12/26/18	DL
4	LE	CONSTRUCTION	2/15/19	DL

SCALE: AS INDICATED

DATE: FEBRUARY 15, 2019

DRAWN BY: KV

CHECKED BY: JA

FAA AIP NO:

WORK BREAKDOWN NO.

DESIGN CONTRACT NO. 201735882

CONST. CONTRACT NO. 201846271

VOLUME NO.

SHEET TITLE

SIGNAGE PLAN (11 OF 17)

SHEET NO. EL931

388 OF 396

CADD FILE NO. _201735882-B1EELP-1356

D:\dropbox (lean photometrics)\active projects\1571801a rah den 17r-35l reconstruction\01 drawings\working drawings\Sheets_201735882-B1EELP-1356.dwg Feb 12, 2019 – 5:41pm Kat

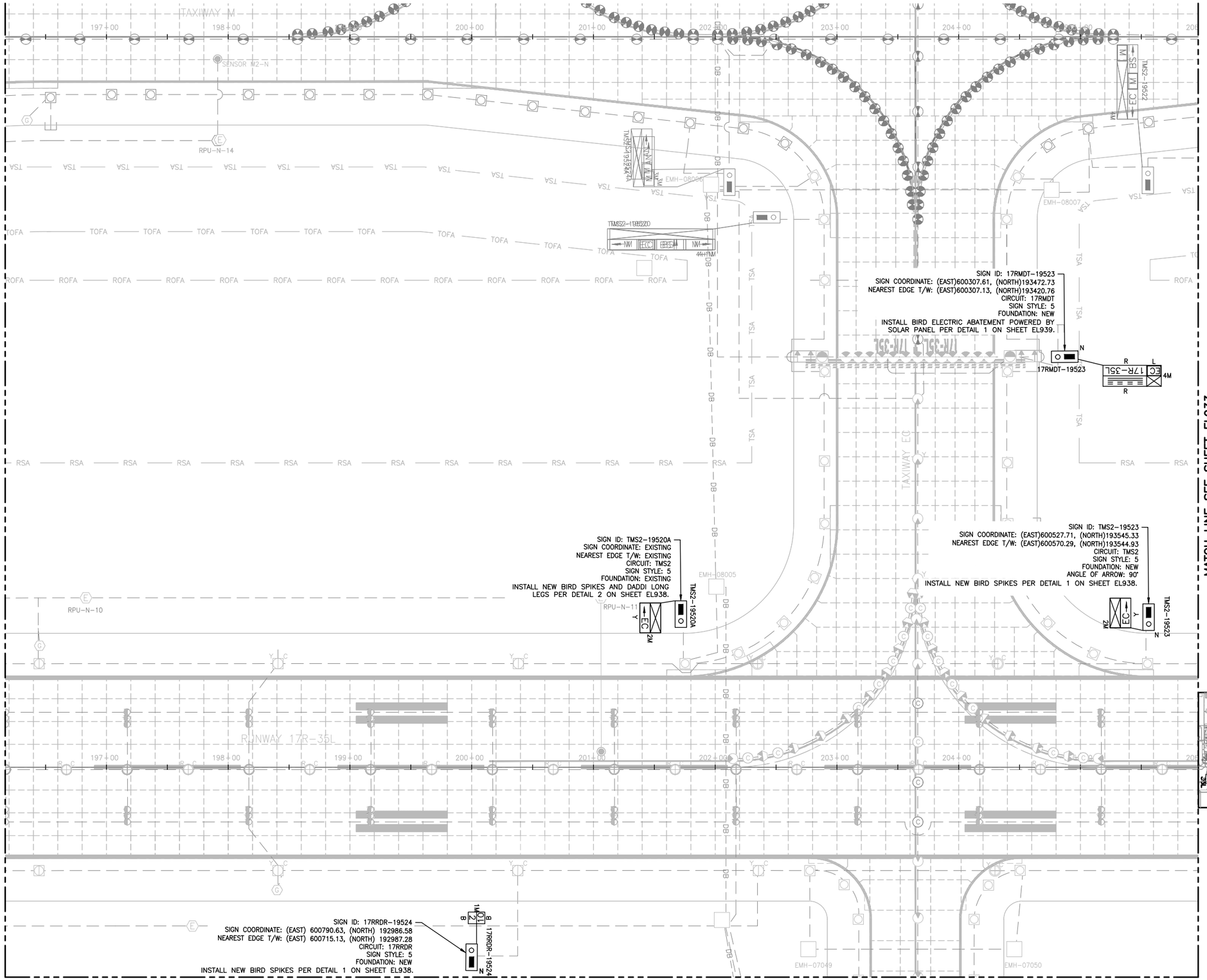

NOTES:

1. SIGN LENGTHS MAY VARY DEPENDING ON MANUFACTURER.
2. CONFIRM LENGTH WITH MANUFACTURER PRIOR TO BID AND ADJUST FOUNDATION ACCORDINGLY.
3. PROVIDE UTILITY LOCATION & POT-HOLING OF LOCATION OF NEW SIGN. SURVEY RESULTS.
4. PROVIDE SHOP DRAWING SHOWING LOCATION OF PROPOSED SIGN & SURVEYED UTILITIES. OBTAIN APPROVAL FROM DENVER PROJECT MANAGER, PRIOR TO EXCAVATION.
5. BLUE STAKE THE 4 CORNERS OF SIGN AND FOUNDATION AND DEFINED EDGE OF T/W TO OBTAIN ENGINEER'S APPROVAL PRIOR TO EXCAVATION. THIS APPLIES TO ALL NEW SIGNS.
6. THE DESIGNATIONS OF SIGNS TO BE INSTALLED ARE:

   R = LIGHTED MANDATORY SIGN (WHITE LEGEND ON RED BACKGROUND)

   L = LIGHTED TAXIWAY AND RUNWAY LOCATION SIGN (YELLOW LEGEND AND BORDER ON BLACK BACKGROUND)

   Y = LIGHTED DIRECTION, DESTINATION & BOUNDARY SIGNS (BLACK LEGEND ON YELLOW BACKGROUND)

   B = LIGHTED RUNWAY DISTANCE REMAINING SIGN (WHITE LEGEND ON BLACK BACKGROUND)
7. THE ANGLE OF THE ARROW OF THE SIGN IS GIVEN ACCORDING TO THE BELOW CONVENTION. ANGLE IN PARENTHESIS DENOTES ARROW ANGLE IF NOT 0°, 90°, 180°, OR 270°.

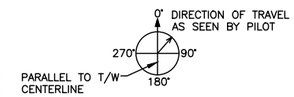

8. ACTUAL NUMBER OF MODULES/WIDTH TO BE USED FOR EACH SIGN WILL BE DETERMINED BY SIGN MANUFACTURER.
   1M = 1 MODULE
   2M = 2 MODULES
   3M = 3 MODULES
   4M = 4 MODULES
9. SIGN COORDINATE IS DEFINED AS THE COORDINATE TO THE NEAREST EDGE OF SIGN AND NOT BASE CAN AND NOT FOUNDATION.
10. SIGN LOCATION & ALIGNMENT:
    INSTALL SIGN SO THAT IT IS IN LINE WITH AN IMAGINARY LINE STRETCHING BETWEEN SIGN COORDINATE & DEFINED EDGE OF TAXIWAY. LOCATION SHALL BE SO THAT THE SIGN COORDINATE IS AT THE NEAREST EDGE OF SIGN.
11. SIGN CHARACTERISTICS:
    - ALL NEW SIGNS SHALL BE LED.
    - RDR SIGNS MUST BE SIZE 4
    - ALL OTHER GUIDANCE SIGNS MUST BE SIZE 3.
    - SIGNS MUST BE MODE 2.
12. INSTALL BIRD ABATEMENT PROTECTION ON SIGNS WITH DESIGNATION AS SHOWN. COST FOR BIRD ABATEMENT SHALL BE BID UNDER BID ITEM L-128.

40' 20' 0 40'

NORTH

KEY PLAN

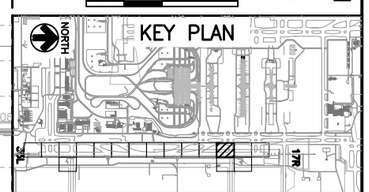

COLORADO LICENSED
DORON LEAN
52246
2/15/19
PROFESSIONAL ENGINEER

CITY & COUNTY of DENVER

DENVER INTERNATIONAL AIRPORT

LEAN ENGINEERING

RUNWAY 17R-35L COMPLEX PAVEMENT REHABILITATION PACKAGE 1

ISSUE RECORD

NO.	BY	PURPOSE	DATE	CKD
1	LE	50% DESIGN	09/14/18	DL
2	LE	90% DESIGN	10/26/18	DL
3	LE	BID	12/26/18	DL
4	LE	CONSTRUCTION	2/15/19	DL

SCALE: AS INDICATED

DATE: FEBRUARY 15, 2019

DRAWN BY: KV

CHECKED BY: JA

FAA AIP NO:

WORK BREAKDOWN NO.

DESIGN CONTRACT NO. 201735882

CONST. CONTRACT NO. 201846271

VOLUME NO.

SHEET TITLE

SIGNAGE PLAN (12 OF 17)

SHEET NO. EL932

389 OF 396

CADD FILE NO. _201735882-B1EELP-1356

D:\dropbox (lean photometrics)\active projects\157180la rah den 17r-35l reconstruction\01 drawings\working drawings\Sheets_201735882-B1EELP-1356.dwg Feb 12, 2019 - 5:42pm Kat

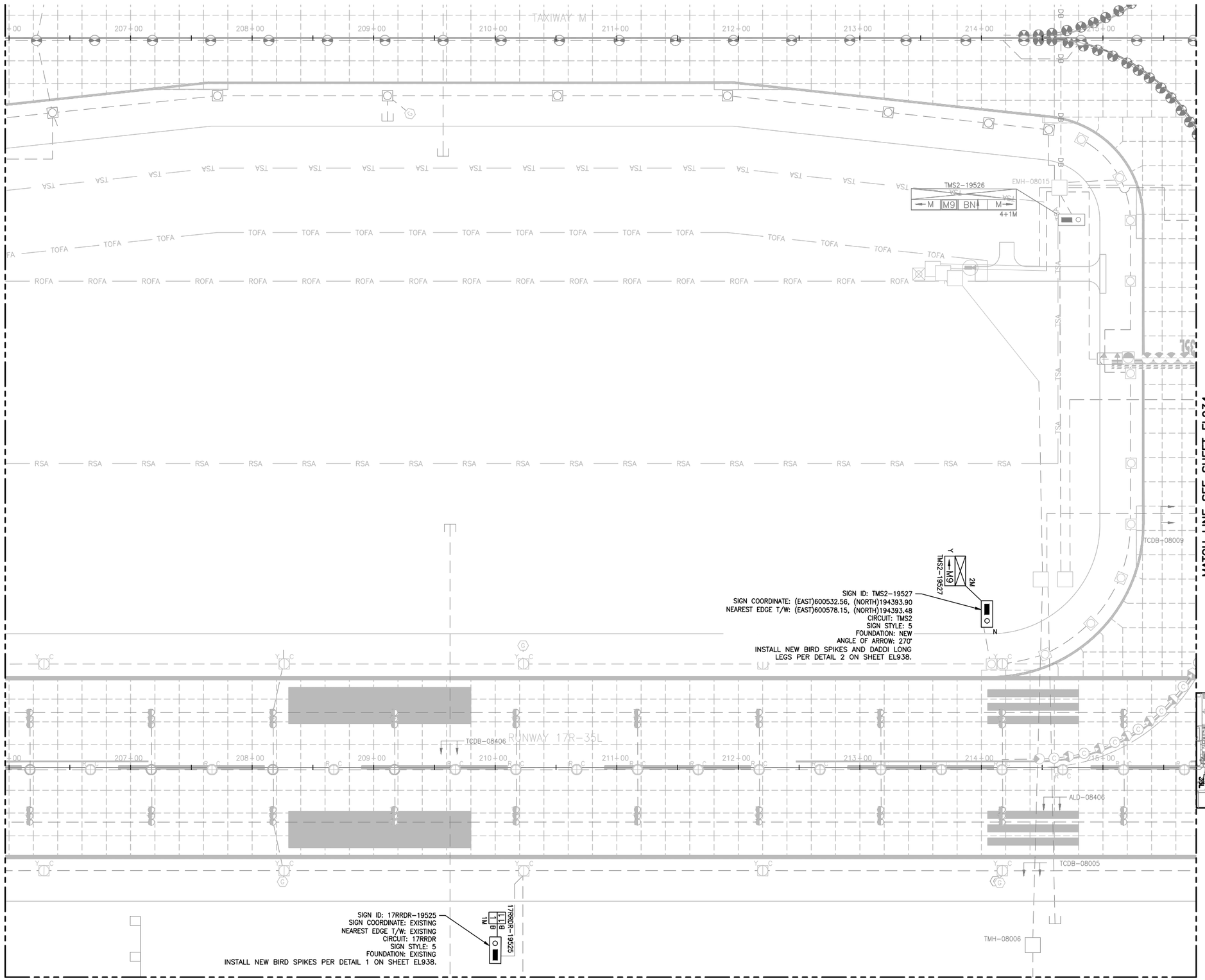

NOTES:

1. SIGN LENGTHS MAY VARY DEPENDING ON MANUFACTURER.
2. CONFIRM LENGTH WITH MANUFACTURER PRIOR TO BID AND ADJUST FOUNDATION ACCORDINGLY.
3. PROVIDE UTILITY LOCATION & POT–HOLING OF LOCATION OF NEW SIGN. SURVEY RESULTS.
4. PROVIDE SHOP DRAWING SHOWING LOCATION OF PROPOSED SIGN & SURVEYED UTILITIES. OBTAIN APPROVAL FROM DENVER PROJECT MANAGER, PRIOR TO EXCAVATION.
5. BLUE STAKE THE 4 CORNERS OF SIGN AND FOUNDATION AND DEFINED EDGE OF T/W TO OBTAIN ENGINEER'S APPROVAL PRIOR TO EXCAVATION. THIS APPLIES TO ALL NEW SIGNS.
6. THE DESIGNATIONS OF SIGNS TO BE INSTALLED ARE:

   R = LIGHTED MANDATORY SIGN (WHITE LEGEND ON RED BACKGROUND)

   L = LIGHTED TAXIWAY AND RUNWAY LOCATION SIGN (YELLOW LEGEND AND BORDER ON BLACK BACKGROUND)

   Y = LIGHTED DIRECTION, DESTINATION & BOUNDARY SIGNS (BLACK LEGEND ON YELLOW BACKGROUND)

   B = LIGHTED RUNWAY DISTANCE REMAINING SIGN (WHITE LEGEND ON BLACK BACKGROUND)
7. THE ANGLE OF THE ARROW OF THE SIGN IS GIVEN ACCORDING TO THE BELOW CONVENTION. ANGLE IN PARENTHESIS DENOTES ARROW ANGLE IF NOT 0°, 90°, 180°, OR 270°.

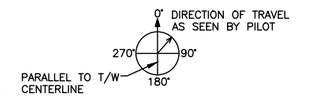

8. ACTUAL NUMBER OF MODULES/WIDTH TO BE USED FOR EACH SIGN WILL BE DETERMINED BY SIGN MANUFACTURER.
   1M = 1 MODULE
   2M = 2 MODULES
   3M = 3 MODULES
   4M = 4 MODULES
9. SIGN COORDINATE IS DEFINED AS THE COORDINATE TO THE NEAREST EDGE OF SIGN AND NOT BASE CAN AND NOT FOUNDATION.
10. SIGN LOCATION & ALIGNMENT:
    INSTALL SIGN SO THAT IT IS IN LINE WITH AN IMAGINARY LINE STRETCHING BETWEEN SIGN COORDINATE & DEFINED EDGE OF TAXIWAY. LOCATION SHALL BE SO THAT THE SIGN COORDINATE IS AT THE NEAREST EDGE OF SIGN.
11. SIGN CHARACTERISTICS:
    – ALL NEW SIGNS SHALL BE LED.
    – RDR SIGNS MUST BE SIZE 4
    – ALL OTHER GUIDANCE SIGNS MUST BE SIZE 3.
    – SIGNS MUST BE MODE 2.
12. INSTALL BIRD ABATEMENT PROTECTION ON SIGNS WITH DESIGNATION AS SHOWN. COST FOR BIRD ABATEMENT SHALL BE BID UNDER BID ITEM L–128.

40' 20' 0 40'

NORTH

KEY PLAN

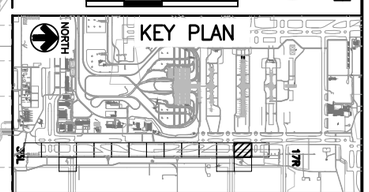

COLORADO LICENSED
DORON LEAN
52246
2/15/19
PROFESSIONAL ENGINEER

CITY & COUNTY of DENVER

DENVER INTERNATIONAL AIRPORT

LEAN ENGINEERING

RUNWAY 17R-35L COMPLEX PAVEMENT REHABILITATION PACKAGE 1

ISSUE RECORD

NO.	BY	PURPOSE	DATE	CKD
1	LE	50% DESIGN	09/14/18	DL
2	LE	90% DESIGN	10/26/18	DL
3	LE	BID	12/26/18	DL
4	LE	CONSTRUCTION	2/15/19	DL

SCALE: AS INDICATED

DATE: FEBRUARY 15, 2019

DRAWN BY: KV

CHECKED BY: JA

FAA AIP NO:

WORK BREAKDOWN NO.

DESIGN CONTRACT NO. 201735882

CONST. CONTRACT NO. 201846271

VOLUME NO.

SHEET TITLE

SIGNAGE PLAN (13 OF 17)

SHEET NO. EL933

390 OF 396

CADD FILE NO. _201735882-B1EELP-1356

D:\dropbox (lean photometrics)\active projects\1571801a rdh den 17r-35l reconstruction\01 drawings\working drawings\Sheets_201735882-B1EELP-1356.dwg Feb 12, 2019 – 5:42pm Kat

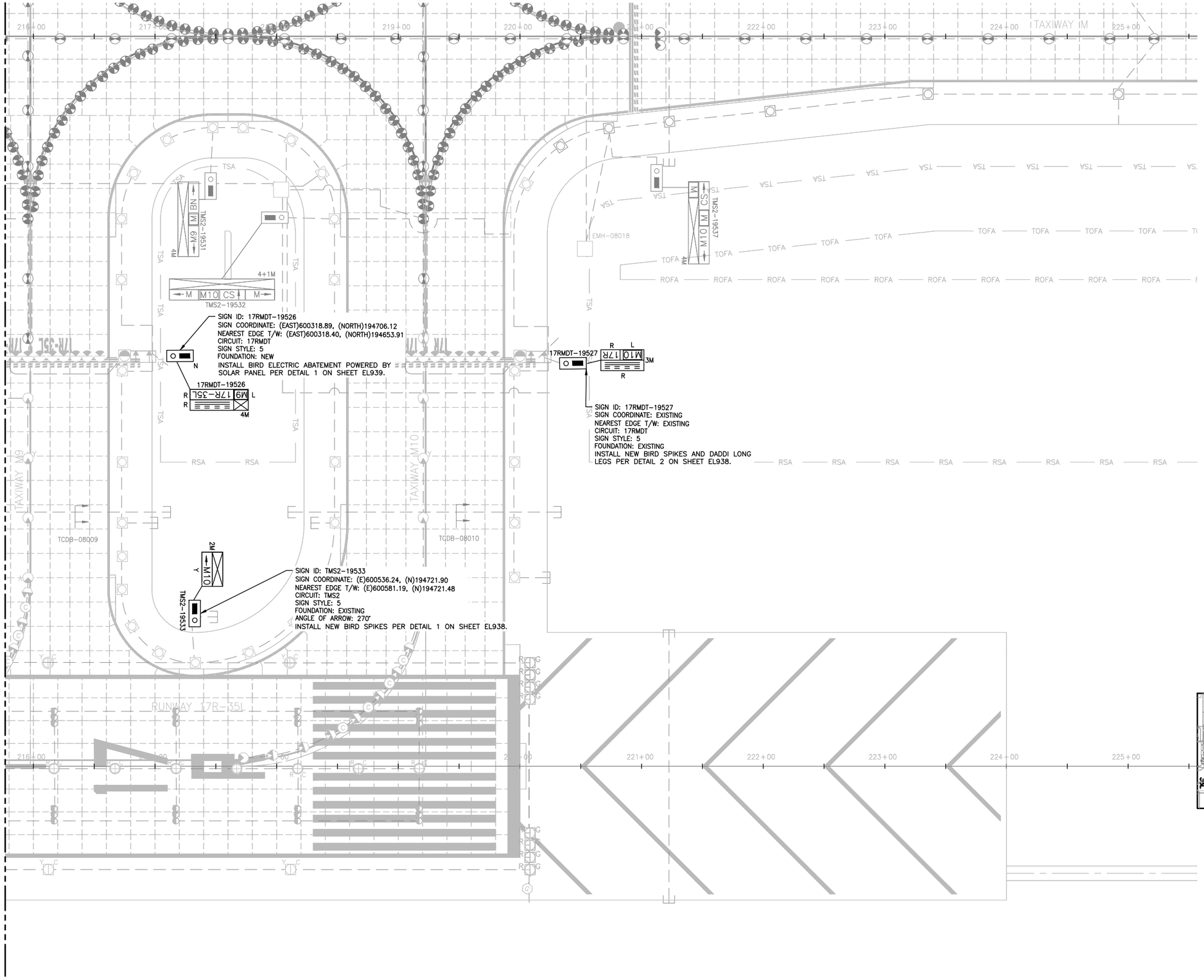

NOTES:

1. SIGN LENGTHS MAY VARY DEPENDING ON MANUFACTURER.
2. CONFIRM LENGTH WITH MANUFACTURER PRIOR TO BID AND ADJUST FOUNDATION ACCORDINGLY.
3. PROVIDE UTILITY LOCATION & POT-HOLING OF LOCATION OF NEW SIGN. SURVEY RESULTS.
4. PROVIDE SHOP DRAWING SHOWING LOCATION OF PROPOSED SIGN & SURVEYED UTILITIES. OBTAIN APPROVAL FROM DENVER PROJECT MANAGER, PRIOR TO EXCAVATION.
5. BLUE STAKE THE 4 CORNERS OF SIGN AND FOUNDATION AND DEFINED EDGE OF T/W TO OBTAIN ENGINEER'S APPROVAL PRIOR TO EXCAVATION. THIS APPLIES TO ALL NEW SIGNS.
6. THE DESIGNATIONS OF SIGNS TO BE INSTALLED ARE:

   R = LIGHTED MANDATORY SIGN (WHITE LEGEND ON RED BACKGROUND)

   L = LIGHTED TAXIWAY AND RUNWAY LOCATION SIGN (YELLOW LEGEND AND BORDER ON BLACK BACKGROUND)

   Y = LIGHTED DIRECTION, DESTINATION & BOUNDARY SIGNS (BLACK LEGEND ON YELLOW BACKGROUND)

   B = LIGHTED RUNWAY DISTANCE REMAINING SIGN (WHITE LEGEND ON BLACK BACKGROUND)
7. THE ANGLE OF THE ARROW OF THE SIGN IS GIVEN ACCORDING TO THE BELOW CONVENTION. ANGLE IN PARENTHESIS DENOTES ARROW ANGLE IF NOT 0°, 90°, 180°, OR 270°.

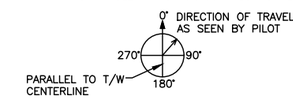

8. ACTUAL NUMBER OF MODULES/WIDTH TO BE USED FOR EACH SIGN WILL BE DETERMINED BY SIGN MANUFACTURER.
   1M = 1 MODULE
   2M = 2 MODULES
   3M = 3 MODULES
   4M = 4 MODULES
9. SIGN COORDINATE IS DEFINED AS THE COORDINATE TO THE NEAREST EDGE OF SIGN AND NOT BASE CAN AND NOT FOUNDATION.
10. SIGN LOCATION & ALIGNMENT:
    INSTALL SIGN SO THAT IT IS IN LINE WITH AN IMAGINARY LINE STRETCHING BETWEEN SIGN COORDINATE & DEFINED EDGE OF TAXIWAY. LOCATION SHALL BE SO THAT THE SIGN COORDINATE IS AT THE NEAREST EDGE OF SIGN.
11. SIGN CHARACTERISTICS:
    - ALL NEW SIGNS SHALL BE LED.
    - RDR SIGNS MUST BE SIZE 4
    - ALL OTHER GUIDANCE SIGNS MUST BE SIZE 3.
    - SIGNS MUST BE MODE 2.
12. INSTALL BIRD ABATEMENT PROTECTION ON SIGNS WITH DESIGNATION AS SHOWN. COST FOR BIRD ABATEMENT SHALL BE BID UNDER BID ITEM L-128.

40' 20' 0 40'

NORTH

KEY PLAN

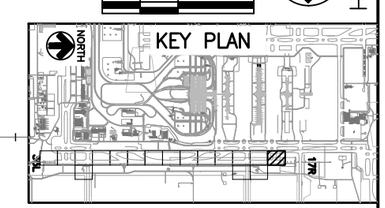

COLORADO LICENSED
JASON LEAR
52246
2/15/19
PROFESSIONAL ENGINEER

CITY & COUNTY of DENVER

DENVER INTERNATIONAL AIRPORT

LEAN ENGINEERING

RUNWAY 17R-35L COMPLEX PAVEMENT REHABILITATION PACKAGE 1

ISSUE RECORD

NO.	BY	PURPOSE	DATE	CKD
1	LE	50% DESIGN	09/14/18	DL
2	LE	90% DESIGN	10/26/18	DL
3	LE	BID	12/26/18	DL
4	LE	CONSTRUCTION	2/15/19	DL

SCALE: AS INDICATED

DATE: FEBRUARY 15, 2019

DRAWN BY: KV

CHECKED BY: JA

FAA AIP NO:

WORK BREAKDOWN NO.

DESIGN CONTRACT NO. 201735882

CONST. CONTRACT NO. 201846271

VOLUME NO.

SHEET TITLE

SIGNAGE PLAN (14 OF 17)

SHEET NO. EL934

391 OF 396

CADD FILE NO. _201735882-B1EELP-1356

D:\dropbox (lean photometrics)\active projects\157180ia rsh den 17-35l reconstruction\01 drawings\working drawings\Sheets_201735882-B1EELP-1356.dwg Feb 12, 2019 - 5:42pm Kat

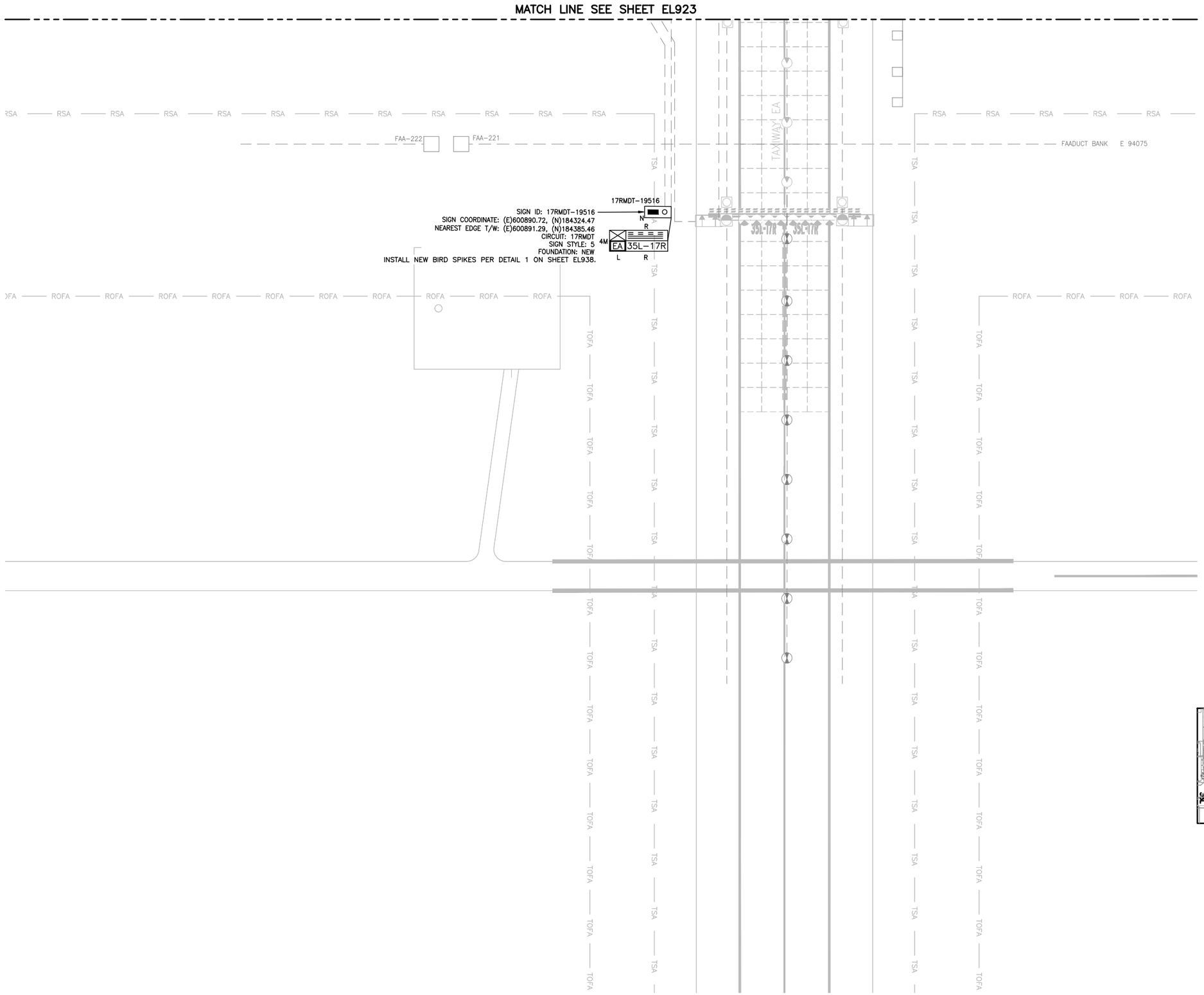

NOTES:

1. SIGN LENGTHS MAY VARY DEPENDING ON MANUFACTURER.
2. CONFIRM LENGTH WITH MANUFACTURER PRIOR TO BID AND ADJUST FOUNDATION ACCORDINGLY.
3. PROVIDE UTILITY LOCATION & POT-HOLING OF LOCATION OF NEW SIGN. SURVEY RESULTS.
4. PROVIDE SHOP DRAWING SHOWING LOCATION OF PROPOSED SIGN & SURVEYED UTILITIES. OBTAIN APPROVAL FROM DENVER PROJECT MANAGER, PRIOR TO EXCAVATION.
5. BLUE STAKE THE 4 CORNERS OF SIGN AND FOUNDATION AND DEFINED EDGE OF T/W TO OBTAIN ENGINEER'S APPROVAL PRIOR TO EXCAVATION. THIS APPLIES TO ALL NEW SIGNS.
6. THE DESIGNATIONS OF SIGNS TO BE INSTALLED ARE:

   R = LIGHTED MANDATORY SIGN (WHITE LEGEND ON RED BACKGROUND)

   L = LIGHTED TAXIWAY AND RUNWAY LOCATION SIGN (YELLOW LEGEND AND BORDER ON BLACK BACKGROUND)

   Y = LIGHTED DIRECTION, DESTINATION & BOUNDARY SIGNS (BLACK LEGEND ON YELLOW BACKGROUND)

   B = LIGHTED RUNWAY DISTANCE REMAINING SIGN (WHITE LEGEND ON BLACK BACKGROUND)
7. THE ANGLE OF THE ARROW OF THE SIGN IS GIVEN ACCORDING TO THE BELOW CONVENTION. ANGLE IN PARENTHESIS DENOTES ARROW ANGLE IF NOT 0°, 90°, 180°, OR 270°.

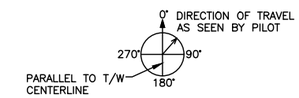

8. ACTUAL NUMBER OF MODULES/WIDTH TO BE USED FOR EACH SIGN WILL BE DETERMINED BY SIGN MANUFACTURER.
   1M = 1 MODULE
   2M = 2 MODULES
   3M = 3 MODULES
   4M = 4 MODULES
9. SIGN COORDINATE IS DEFINED AS THE COORDINATE TO THE NEAREST EDGE OF SIGN AND NOT BASE CAN AND NOT FOUNDATION.
10. SIGN LOCATION & ALIGNMENT:
    INSTALL SIGN SO THAT IT IS IN LINE WITH AN IMAGINARY LINE STRETCHING BETWEEN SIGN COORDINATE & DEFINED EDGE OF TAXIWAY. LOCATION SHALL BE SO THAT THE SIGN COORDINATE IS AT THE NEAREST EDGE OF SIGN.
11. SIGN CHARACTERISTICS:
    - ALL NEW SIGNS SHALL BE LED.
    - RDR SIGNS MUST BE SIZE 4
    - ALL OTHER GUIDANCE SIGNS MUST BE SIZE 3.
    - SIGNS MUST BE MODE 2.
12. INSTALL BIRD ABATEMENT PROTECTION ON SIGNS WITH DESIGNATION AS SHOWN. COST FOR BIRD ABATEMENT SHALL BE BID UNDER BID ITEM L-128.

40' 20' 0 40'

NORTH

KEY PLAN

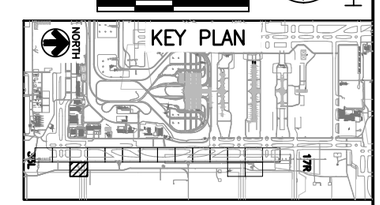

COLORADO LICENSED
DIXON LEAN
52246
2/15/19
PROFESSIONAL ENGINEER

CITY & COUNTY of DENVER

DENVER INTERNATIONAL AIRPORT

LEAN ENGINEERING

RUNWAY 17R-35L COMPLEX PAVEMENT REHABILITATION PACKAGE 1

ISSUE RECORD

NO.	BY	PURPOSE	DATE	CKD
1	LE	50% DESIGN	09/14/18	DL
2	LE	90% DESIGN	10/26/18	DL
3	LE	BID	12/26/18	DL
4	LE	CONSTRUCTION	2/15/19	DL

SCALE: AS INDICATED

DATE: FEBRUARY 15, 2019

DRAWN BY: KV

CHECKED BY: JA

FAA AIP NO:

WORK BREAKDOWN NO.

DESIGN CONTRACT NO. 201735882

CONST. CONTRACT NO. 201846271

VOLUME NO.

SHEET TITLE

SIGNAGE PLAN (15 OF 17)

SHEET NO. EL935

392 OF 396

CADD FILE NO. _201735882-B1EELP-1356

D:\dropbox (lean photometrics)\active projects\1571801a rdn den 17r-35l reconstruction\01 drawings\working drawings\Sheets_201735882-B1EELP-1356.dwg Feb 12, 2019 - 5:42pm Kat

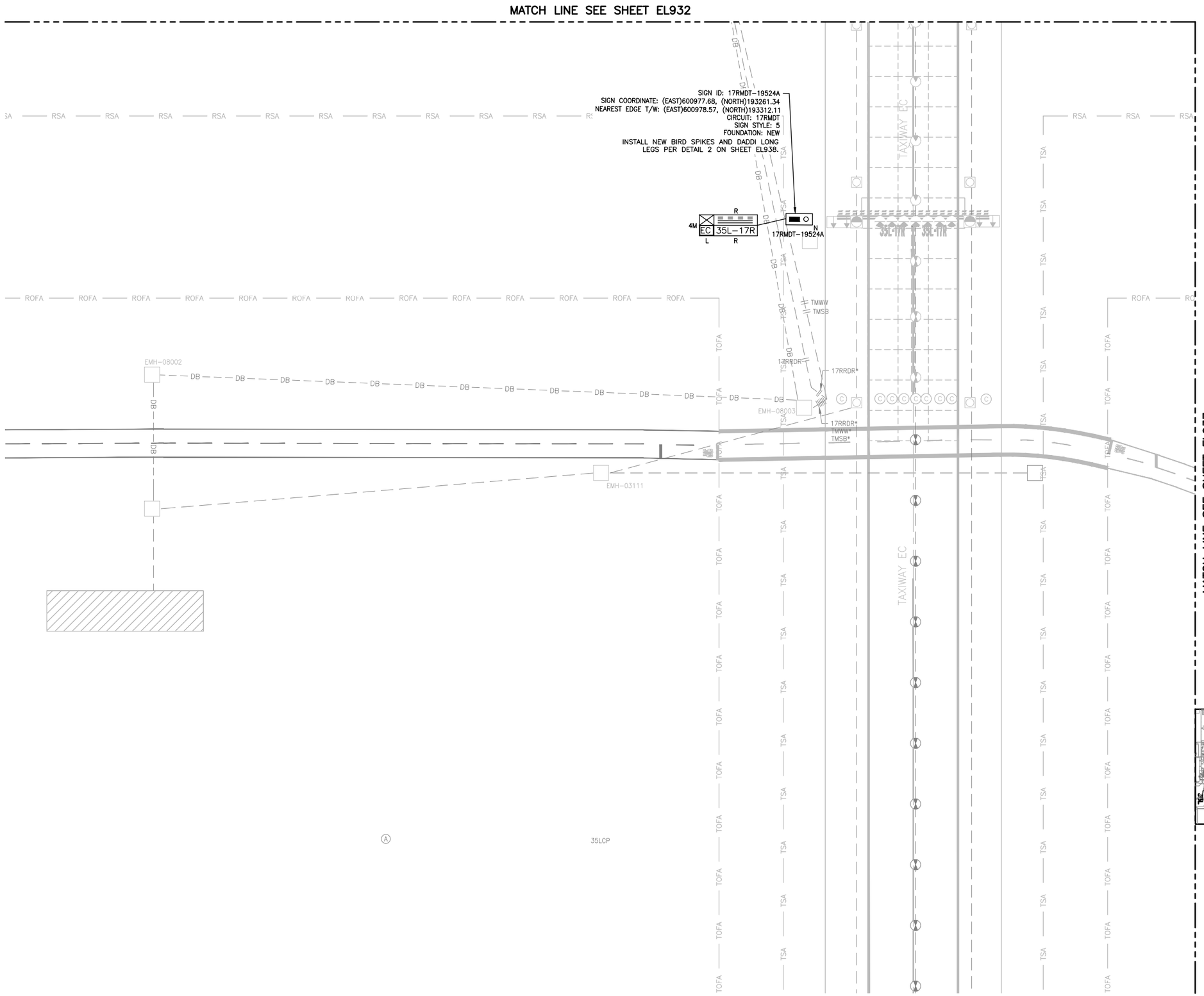

NOTES:

1. SIGN LENGTHS MAY VARY DEPENDING ON MANUFACTURER.
2. CONFIRM LENGTH WITH MANUFACTURER PRIOR TO BID AND ADJUST FOUNDATION ACCORDINGLY.
3. PROVIDE UTILITY LOCATION & POT-HOLING OF LOCATION OF NEW SIGN. SURVEY RESULTS.
4. PROVIDE SHOP DRAWING SHOWING LOCATION OF PROPOSED SIGN & SURVEYED UTILITIES. OBTAIN APPROVAL FROM DENVER PROJECT MANAGER, PRIOR TO EXCAVATION.
5. BLUE STAKE THE 4 CORNERS OF SIGN AND FOUNDATION AND DEFINED EDGE OF T/W TO OBTAIN ENGINEER'S APPROVAL PRIOR TO EXCAVATION. THIS APPLIES TO ALL NEW SIGNS.
6. THE DESIGNATIONS OF SIGNS TO BE INSTALLED ARE:

   R = LIGHTED MANDATORY SIGN (WHITE LEGEND ON RED BACKGROUND)

   L = LIGHTED TAXIWAY AND RUNWAY LOCATION SIGN (YELLOW LEGEND AND BORDER ON BLACK BACKGROUND)

   Y = LIGHTED DIRECTION, DESTINATION & BOUNDARY SIGNS (BLACK LEGEND ON YELLOW BACKGROUND)

   B = LIGHTED RUNWAY DISTANCE REMAINING SIGN (WHITE LEGEND ON BLACK BACKGROUND)
7. THE ANGLE OF THE ARROW OF THE SIGN IS GIVEN ACCORDING TO THE BELOW CONVENTION. ANGLE IN PARENTHESIS DENOTES ARROW ANGLE IF NOT 0°, 90°, 180°, OR 270°.

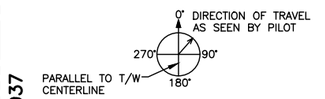

8. ACTUAL NUMBER OF MODULES/WIDTH TO BE USED FOR EACH SIGN WILL BE DETERMINED BY SIGN MANUFACTURER.
   1M = 1 MODULE
   2M = 2 MODULES
   3M = 3 MODULES
   4M = 4 MODULES
9. SIGN COORDINATE IS DEFINED AS THE COORDINATE TO THE NEAREST EDGE OF SIGN AND NOT BASE CAN AND NOT FOUNDATION.
10. SIGN LOCATION & ALIGNMENT:
    INSTALL SIGN SO THAT IT IS IN LINE WITH AN IMAGINARY LINE STRETCHING BETWEEN SIGN COORDINATE & DEFINED EDGE OF TAXIWAY. LOCATION SHALL BE SO THAT THE SIGN COORDINATE IS AT THE NEAREST EDGE OF SIGN.
11. SIGN CHARACTERISTICS:
    - ALL NEW SIGNS SHALL BE LED.
    - RDR SIGNS MUST BE SIZE 4
    - ALL OTHER GUIDANCE SIGNS MUST BE SIZE 3.
    - SIGNS MUST BE MODE 2.
12. INSTALL BIRD ABATEMENT PROTECTION ON SIGNS WITH DESIGNATION AS SHOWN. COST FOR BIRD ABATEMENT SHALL BE BID UNDER BID ITEM L-128.

40' 20' 0 40'

NORTH

KEY PLAN

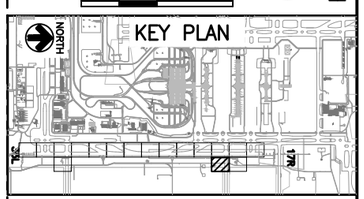

COLORADO LICENSED
DIXON LEAN
52246
2/15/19
PROFESSIONAL ENGINEER

CITY & COUNTY of DENVER

DENVER INTERNATIONAL AIRPORT

LEAN ENGINEERING

RUNWAY 17R-35L COMPLEX PAVEMENT REHABILITATION PACKAGE 1

ISSUE RECORD

NO.	BY	PURPOSE	DATE	CKD
1	LE	50% DESIGN	09/14/18	DL
2	LE	90% DESIGN	10/26/18	DL
3	LE	BID	12/26/18	DL
4	LE	CONSTRUCTION	2/15/19	DL

SCALE: AS INDICATED

DATE: FEBRUARY 15, 2019

DRAWN BY: KV

CHECKED BY: JA

FAA AIP NO:

WORK BREAKDOWN NO.

DESIGN CONTRACT NO. 201735882

CONST. CONTRACT NO. 201846271

VOLUME NO.

SHEET TITLE

SIGNAGE PLAN (16 OF 17)

SHEET NO. EL936

393 OF 396

CADD FILE NO. _201735882-B1EELP-1356

D:\dropbox (lean photometrics)\active projects\1571801a rah den 17-35l reconstruction\01 drawings\working drawings\Sheets_201735882-B1EELP-1356.dwg Feb 12, 2019 - 5:43pm Kat

MATCH LINE SEE SHEET EL933

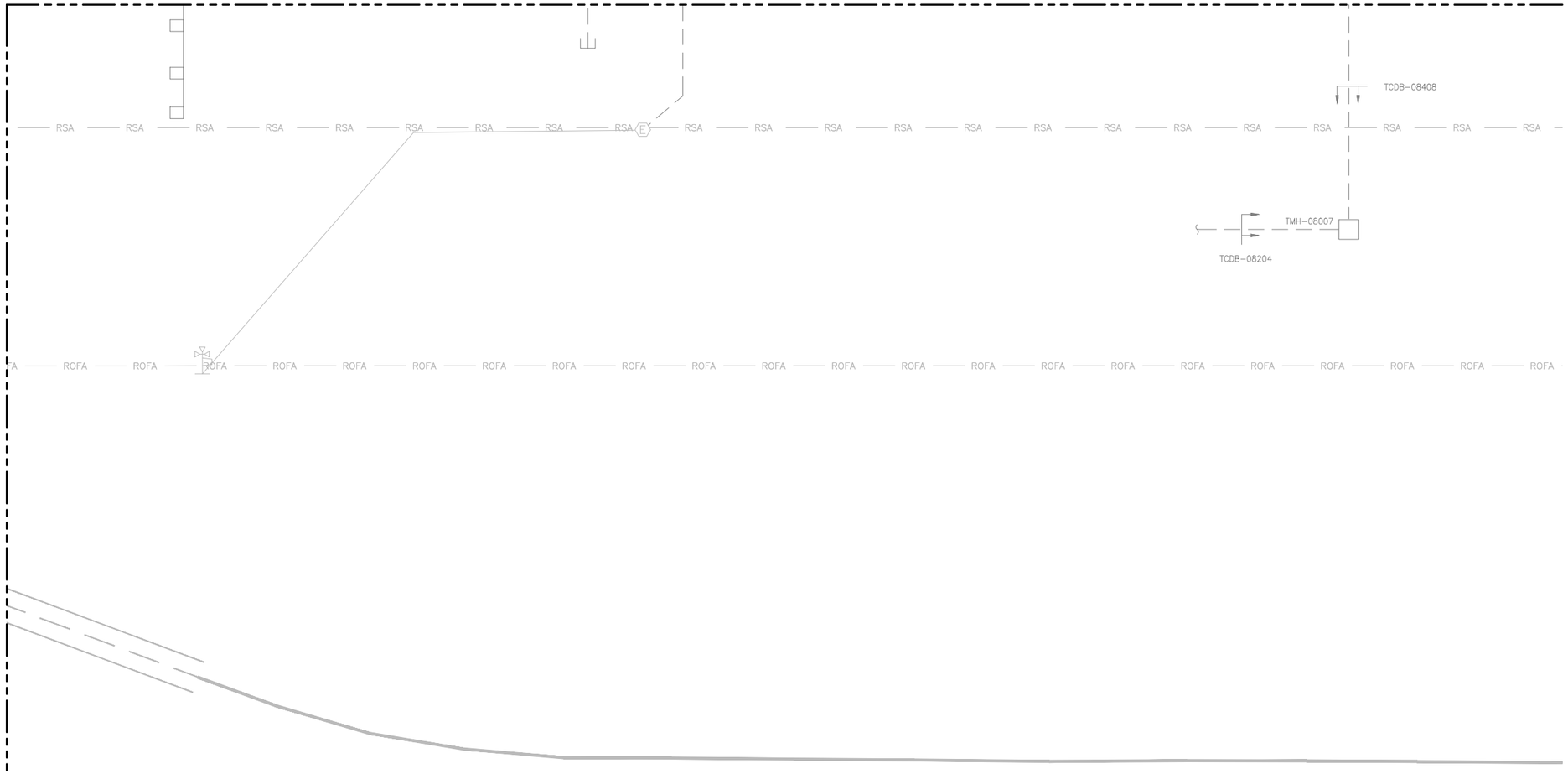

MATCH LINE SEE SHEET EL936

NOTES:

1. THIS SHEET IS FOR INFORMATIONAL PURPOSES ONLY. NO WORK IS REQUIRED.

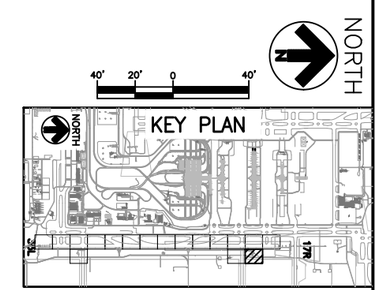

COLORADO LICENSED
BARON LEA
52246
2/15/19
PROFESSIONAL ENGINEER

CITY & COUNTY of DENVER

DENVER INTERNATIONAL AIRPORT

LEAN ENGINEERING

RUNWAY 17R-35L COMPLEX PAVEMENT REHABILITATION PACKAGE 1

ISSUE RECORD

NO.	BY	PURPOSE	DATE	CKD
1	LE	50% DESIGN	09/14/18	DL
2	LE	90% DESIGN	10/26/18	DL
3	LE	BID	12/26/18	DL
4	LE	CONSTRUCTION	2/15/19	DL

SCALE: AS INDICATED

DATE: FEBRUARY 15, 2019

DRAWN BY: KV

CHECKED BY: JA

FAA AIP NO:

WORK BREAKDOWN NO.

DESIGN CONTRACT NO. 201735882

CONST. CONTRACT NO. 201846271

VOLUME NO.

SHEET TITLE

SIGNAGE PLAN (17 OF 17)

SHEET NO. EL937

394 OF 396

CADD FILE NO. _201735882-B1EELP-1356

D:\dropbox (lean photometrics)\active projects\1571801a rah den 17r-35l reconstruction\01 drawings\working drawings\Sheets_201735882-B1EELP-1356.dwg Feb 12, 2019 - 5:43pm Kat

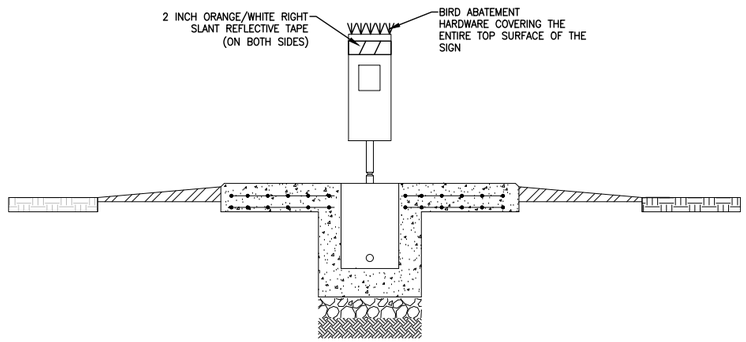

1. INSTALL SIGN AND FOUNDATION PER DETAILS ON EL600 SERIES.
2. REFLECTIVE TAPE TO THE ENTIRE BACK SIDE OF A SINGLE SIDED SIGN OR TO THE TWO EDGES OF DOUBLE SIDED SIGN.
3. BIRD SPIKE MODEL SHALL BE BIRD-BE-GONE (MODEL MEGA BIRD SPIKES OR 7" LONG BY 5" WIDE MODEL. ASSUME 2 STRIPES FULL LENGTH OF SIGN) SPIKE OR APPROVED EQUAL. ADDITIONAL BIRD SPIKES SHALL BE REQUIRED TO COVER THE TOP EXPOSED SURFACE OF SIGN. ALL WORK SHALL BE CONSIDERED INCIDENTAL.

1 / – BIRD SPIKES INSTALLATION ON TYPICAL SIGN
NOT TO SCALE

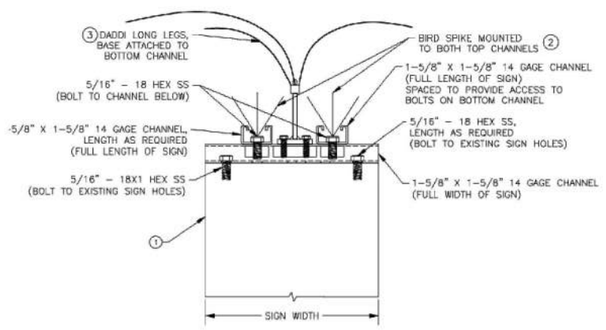

SECTION 1
N.T.S.

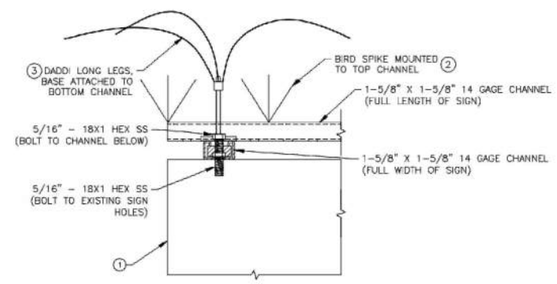

DETAIL 2
N.T.S.

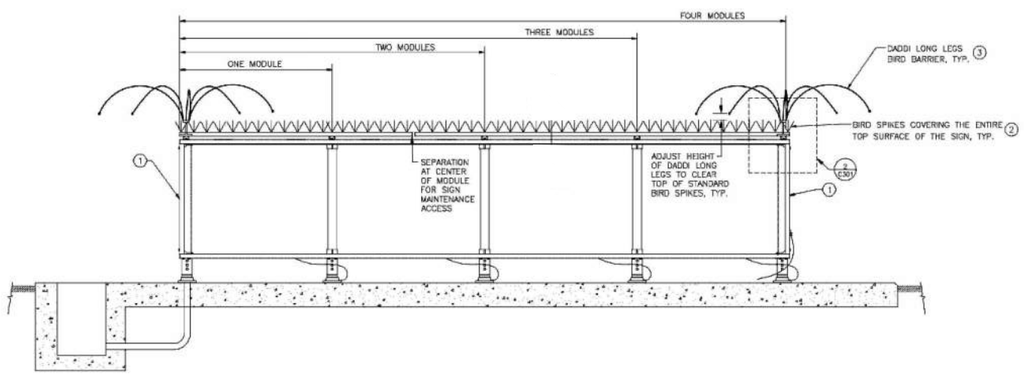

2 / – BIRD SPIKES AND DADDI LONG LEGS INSTALLATION ON TYPICAL SIGN
NOT TO SCALE

NOTES:

1. SEE SHEET E-001 FOR GENERAL ELECTRICAL NOTES.

DETAIL 2 NOTES:

1. INSTALL SIGN AND FOUNDATION PER DETAILS ON EL600 SERIES.
2. IN ADDITION TO SIGN, INSTALL SHALL BE BIRD-BE-GONE (MODEL MEGA BIRD SPIKES OR 7" LONG BY 5" WIDE MODEL. ASSUME 2 STRIPES FULL LENGTH OF SIGN) SPIKE OR APPROVED EQUAL. ADDITIONAL BIRD SPIKES SHALL BE REQUIRED TO COVER THE TOP EXPOSED SURFACE OF SIGN. ALL WORK SHALL BE CONSIDERED INCIDENTAL.
3. IN ADDITION TO BIRD SPIKES INSTALL DADDI LONG LEGS, MODEL DD-4000 4' DIAMETER DADDI LONG LEGS BIRD BARRIER OR APPROVED EQUAL.

COLORADO LICENSED
JORON LEA
52246
2/15/19
PROFESSIONAL ENGINEER

CITY & COUNTY of DENVER
DENVER INTERNATIONAL AIRPORT

LEAN ENGINEERING

RUNWAY 17R-35L COMPLEX PAVEMENT REHABILITATION PACKAGE 1

ISSUE RECORD

NO.	BY	PURPOSE	DATE	CKD
1	LE	50% DESIGN	09/14/18	DL
2	LE	90% DESIGN	10/26/18	DL
3	LE	BID	12/26/18	DL
4	LE	CONSTRUCTION	2/15/19	DL

SCALE: AS INDICATED
DATE: FEBRUARY 15, 2019
DRAWN BY: KV
CHECKED BY: JA
FAA AIP NO:
WORK BREAKDOWN NO.
DESIGN CONTRACT NO. 201735882
CONST. CONTRACT NO. 201846271
VOLUME NO.
SHEET TITLE: BIRD ABATMENT DETAIL 1
SHEET NO. EL938
395 OF 396
CADD FILE NO. _201735882-B1EELP-1356

D:\dropbox (lean photometrics)\active projects\1571801a rah den 17r-35l reconstruction\01 drawings\working drawings\sheets_20173582-B1EELP-1356.dwg Feb 12, 2019 - 5:43pm Kat

NOTES:

1. SEE SHEET E-001 FOR GENERAL ELECTRICAL NOTES.

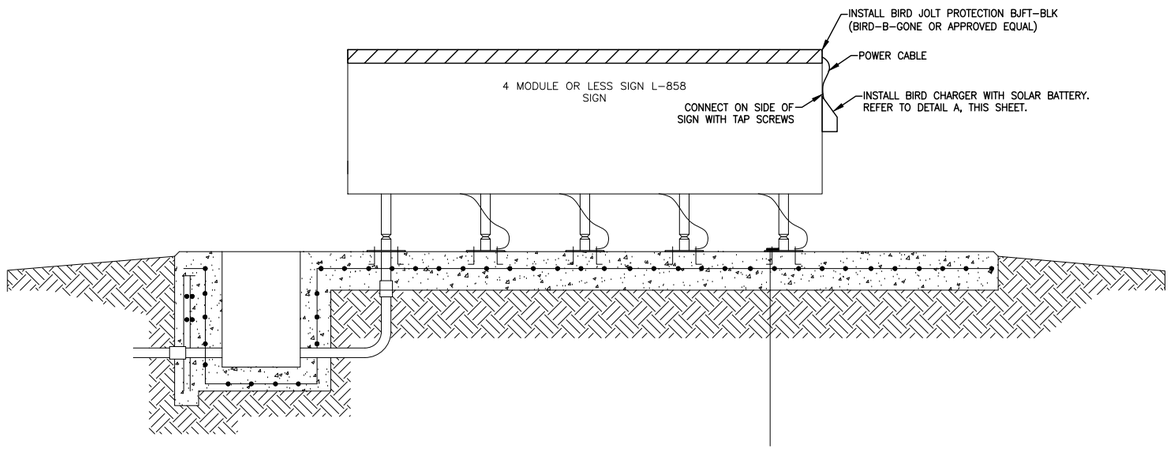

DETAIL 1 NOTES:

1. INSTALL SIGN AND FOUNDATION PER DETAILS ON EL600 SERIES.
2. INSTALL BIRD PROTECTION WITH SOLAR PANEL.
3. ORIENTATE SOLAR PANEL TOWARDS SOUTH/SOUTHWEST AS MUCH POSSIBLE.

1 / – BIRD ELECTRIC ABATMENT PROTECTION POWERED BY SOLAR PANEL
NOT TO SCALE

A / – SOLAR CHARGER
NOT TO SCALE

CITY & COUNTY of DENVER

DENVER INTERNATIONAL AIRPORT

LEAN ENGINEERING

RUNWAY 17R-35L COMPLEX PAVEMENT REHABILITATION PACKAGE 1

ISSUE RECORD

NO.	BY	PURPOSE	DATE	CKD
1	LE	50% DESIGN	09/14/18	DL
2	LE	90% DESIGN	10/26/18	DL
3	LE	BID	12/26/18	DL
4	LE	CONSTRUCTION	2/15/19	DL

SCALE: AS INDICATED

DATE: FEBRUARY 15, 2019

DRAWN BY: KV

CHECKED BY: JA

FAA AIP NO:

WORK BREAKDOWN NO.

DESIGN CONTRACT NO. 201735882

CONST. CONTRACT NO. 201846271

VOLUME NO.

SHEET TITLE

BIRD ABATMENT DETAIL 2

SHEET NO. EL939

CADD FILE NO. _201735882-B1EELP-1356

D:\dropbox (lean photometrics)\active projects\1157180ia rah den 17r-35l reconstruction\01 drawings\working drawings\Sheets_201735882-B1EELP-1356.dwg Feb 12, 2019 - 5:43pm Kat