2022

DENVER BUILDING CODE

&

DENVER FIRE CODE

January 2023, 1st Printing

June 2023, 2nd Printing

December 2023, 3rd Printing

November 2024, 4th Printing

Limited Mandatory Provisions of the 2022 Denver Green Code

Apply to most Commercial and Multi-Family Projects

(See Administrative Provisions Section 101.4)

Table of Contents

2022 Denver Codes - Quick Links

Denver Building Code Administrative Provisions

Denver Existing Building Code (DEBC)

Denver Mechanical Code (DMC)

Denver Fuel Gas Code (DFGC)

Denver Fire Code (DFC)

Denver Commercial Building Code (DCBC)

Denver Residential Code (DRC)

Denver Plumbing Code (DPC)

Denver Energy Code (DEC)

Detailed Table of Contents

TABLE OF CONTENTS 2
2022 DENVER CODES - QUICK LINKS 2

ARTICLE 1 24

2022 DENVER BUILDING CODE 24

SECTION 1 24
ADMINISTRATION 24
SECTION 101 24
GENERAL 24
SECTION 102 25
ORGANIZATION OF BUILDING PERMITTING AND INSPECTIONS SERVICES 25
SECTION 103 25
APPLICABILITY 25
SECTION 104 28
POWERS AND DUTIES 28
SECTION 105 30
UNSAFE STRUCTURES, PROJECT SITES, OR EQUIPMENT 30
SECTION 107 35
VIOLATIONS, PENALTIES AND REMEDIES 35
SECTION 108 36
BOARD OF APPEALS 36
SECTION 120 39
LICENSING, CERTIFICATION, REGISTRATION 39

SECTION 121 39
CONTRACTOR LICENSING OR REGISTRATION 39
SECTION 122 42
CERTIFIED SUPERVISOR CERTIFICATES 42
SECTION 124 42
EXAMINATION STANDARDS AND REVIEW 42
SECTION 126 44
LICENSED CONTRACTOR, REGISTRANT AND CERTIFICATE HOLDER RESPONSIBILITY 44
SECTION 127 45
DENIAL, SUSPENSION OR REVOCATION OF LICENSE OR CERTIFICATE 45
SECTION 130 47
PERMITS AND INSPECTIONS 47
SECTION 131 50
PERMIT APPLICATION AND ISSUANCE 50
SECTION 132 57
PERMIT APPLICATION 57
SECTION 133 58
DRAWINGS, SPECIFICATIONS AND SURVEYS 58
SECTION 134 64
PERMITS FOR TEMPORARY STRUCTURES AND USES 64
SECTION 135 65
PHASED APPROVAL 65
SECTION 138 66
PERMIT FEES 66
SECTION 139 67
[DOTI] SITE CONTACT INFORMATION 67
SECTION 140 68
INSPECTIONS 68
SECTION 141 71
SPECIAL INSPECTIONS 71
SECTION 142 71
FINAL INSPECTION APPROVAL, CERTIFICATE OF COMPLIANCE AND CERTIFICATE OF OCCUPANCY 71

DENVER COMMERCIAL BUILDING CODE 76

CHAPTER 1 78
ADMINISTRATION 78
SECTION 101 78
SCOPE AND GENERAL REQUIREMENTS 78
CHAPTER 2 79
DEFINITIONS 79
SECTION 201 79
GENERAL 79
SECTION 202 79
DEFINITIONS 79
CHAPTER 3 84
USE AND OCCUPANCY CLASSIFICATION 84
SECTION 302 84
OCCUPANCY CLASSIFICATION AND USE DESIGNATION 84
SECTION 306 84
FACTORY GROUP F 84

SECTION 307 84
HIGH-HAZARD GROUP H 84
SECTION 308 85
INSTITUTIONAL GROUP I 85
SECTION 310 85
RESIDENTIAL GROUP R 85
SECTION 311 86
STORAGE GROUP S 86
SECTION 312 86
UTILITY AND MISCELLANEOUS GROUP U 86
CHAPTER 4 87
SPECIAL DETAILED REQUIREMENTS BASED ON OCCUPANCY AND USE 87
SECTION 403 87
HIGH-RISE BUILDINGS 87
SECTION 405 89
UNDERGROUND BUILDINGS 89
SECTION 406 89
MOTOR-VEHICLE-RELATED OCCUPANCIES 89
SECTION 412 89
AIRCRAFT RELATED OCCUPANCIES 89
SECTION 414 90
HAZARDOUS MATERIALS 90
SECTION 415 91
GROUPS H-1, H-2, H-3, H-4 AND H-5 91
SECTION 420 91
GROUPS I-1, R-1, R-2, R-3 AND R-4 91
SECTION 429 93
RESIDENTIAL GROUP R-X 93
AIRCRAFT NOISE REDUCTION FOR MULTI-UNIT DWELLINGS AND SCHOOLS 95
CHAPTER 5 104
GENERAL BUILDING HEIGHTS AND AREAS 104
SECTION 503 104
GENERAL BUILDING HEIGHT AND AREA LIMITATIONS 104
SECTION 508.5 104
LIVE/WORK UNITS 104
SECTION 510 104
SPECIAL PROVISIONS 104
CHAPTER 6 105
TYPES OF CONSTRUCTION 105
SECTION 602 105
CONSTRUCTION CLASSIFICATION 105
CHAPTER 7 105
FIRE AND SMOKE PROTECTION FEATURES 105
SECTION 703 105
FIRE-RESISTANCE RATINGS AND FIRE TESTS 105
SECTION 705 105
EXTERIOR WALLS 105
SECTION 707 106
FIRE BARRIERS 106
SECTION 712 106
VERTICAL OPENINGS 106
SECTION 714 107

PENETRATIONS 107
JOINTS AND VOIDS 107
SECTION 717 107
DUCTS AND AIR TRANSFER OPENINGS 107
SECTION 720 107
THERMAL- AND SOUND-INSULATING MATERIALS 107
CHAPTER 8 108
INTERIOR FINISHES 108
SECTION 808 108
ACOUSTICAL CEILING SYSTEMS 108
CHAPTER 9 108
FIRE PROTECTION SYSTEMS 108
SECTION 901 108
GENERAL 108
CHAPTER 10 108
MEANS OF EGRESS 108
SECTION 1003 108
GENERAL MEANS OF EGRESS 108
SECTION 1004 109
OCCUPANT LOAD 109
SECTION 1005 110
MEANS OF EGRESS SIZING 110
SECTION 1006 110
NUMBER OF EXITS AND EXIT ACCESS DOORWAYS 110
SECTION 1008 110
MEANS OF EGRESS ILLUMINATION 110
SECTION 1009 111
ACCESSIBLE MEANS OF EGRESS 111
SECTION 1010 113
DOORS, GATES AND TURNSTILES 113
SECTION 1011 STAIRWAYS 116
SECTION 1013 117
EXIT SIGNS 117
SECTION 1018 117
AISLES 117
SECTION 1019 117
EXIT ACCESS STAIRWAYS AND RAMPS 117
SECTION 1020 117
CORRIDORS 117
SECTION 1021 118
EGRESS BALCONIES 118
SECTION 1023 118
INTERIOR EXIT STAIRWAYS AND RAMPS 118
SECTION 1025 119
LUMINOUS EGRESS PATH MARKINGS 119
SECTION 1027 119
EXTERIOR EXIT STAIRWAYS AND RAMPS 119
[F] SECTION 1030 120
ASSEMBLY 120
CHAPTER 11 122
ACCESSIBILITY 122
SECTION 1101 122

GENERAL 122
SECTION 1105 123
ACCESSIBLE ENTRANCES 123
SECTION 1107 123
MOTOR-VEHICLE-RELATED FACILITIES 123
SECTION 1112 124
SIGNAGE 124
CHAPTER 15 125
SECTION 1503 125
WEATHER PROTECTION 125
SECTION 1505 125
FIRE CLASSIFICATION 125
SECTION 1507 125
REQUIREMENTS FOR ROOF COVERINGS 125
SECTION 1511 127
ROOFTOP STRUCTURES 127
SECTION 1512 127
REROOFING 127
CHAPTER 16 128
STRUCTURAL DESIGN 128
SECTION 1602 128
NOTATIONS 128
SECTION 1607 128
LIVE LOADS 128
FIGURE 1607.8.2 (1) – PLATFORM TRUCK 130
FIGURE 1607.8.2 (2) – LADDER TRUCK 131
SECTION 1608 132
SNOW LOADS 132
SECTION 1609 132
WIND LOADS 132
SECTION 1612 133
FLOOD LOADS 133
SECTION 1613 134
EARTHQUAKE LOADS 134
CHAPTER 17 134
SPECIAL INSPECTIONS AND TESTS 134
SECTION 1704 134
CHAPTER 18 135
SOILS AND FOUNDATIONS 135
SECTION 1809 135
SHALLOW FOUNDATIONS 135
SECTION 1810 135
DEEP FOUNDATIONS 135
CHAPTER 24 135
GLASS AND GLAZING 135
SECTION 2405 135
SLOPED GLAZING AND SKYLIGHTS 135
CHAPTER 26 136
PLASTIC 136
SECTION 2609 136
LIGHT-TRANSMITTING PLASTIC ROOF PANELS 136
SECTION 2610 136

LIGHT-TRANSMITTING PLASTIC SKYLIGHT GLAZING 136
CHAPTER 27 136
ELECTRICAL 136
SECTION 2701 136
GENERAL 136
SECTION 2702 136
EMERGENCY AND STANDBY POWER SYSTEMS 136
CHAPTER 28 137
MECHANICAL SYSTEMS 137
[M] SECTION 2801 137
GENERAL 137
CHAPTER 29 137
PLUMBING SYSTEMS 137
[P] SECTION 2901 137
GENERAL 137
[P] SECTION 2902 137
MINIMUM PLUMBING FACILITIES 137
CHAPTER 30 140
ELEVATORS AND CONVEYING SYSTEMS 140
SECTION 3001 140
GENERAL 140
SECTION 3002 140
HOISTWAY ENCLOSURES 140
[F] SECTION 3003 141
EMERGENCY OPERATIONS 141
[F] SECTION 3006 141
ELEVATOR LOBBIES AND HOISTWAY OPENING PROTECTION 141
[F] SECTION 3007 141
FIRE SERVICE ACCESS ELEVATOR 141
CHAPTER 31 142
SPECIAL CONSTRUCTION 142
SECTION 3103 142
TEMPORARY STRUCTURES 142
SECTION 3105 143
AWNINGS AND CANOPIES 143
SECTION 3109 143
SWIMMING POOLS, SPAS AND HOT TUBS 143
[CDH] SECTION 3116 143
HUD HOMESAND FACTORY-BUILT STRUCTURES 143
CHAPTER 32 147
ENCROACHMENTS INTO THE PUBLIC RIGHT-OF-WAY 147
[DOTI] SECTION 3202 147
ENCROACHMENTS 147
CHAPTER 33 148
SAFEGUARDS DURING CONSTRUCTION 148
SECTION 3301 148
GENERAL 148
SECTION 3302 148
CONSTRUCTION SAFEGUARDS 148
SECTION 3303 148
DEMOLITION 148
SECTION 3306 150

PROTECTION OF PEDESTRIANS 150
SECTION 3307 150
PROTECTION OF ADJOINING PROPERTY 150
SECTION 3308 152
TEMPORARY USE OF STREETS, ALLEYS AND PUBLIC PROPERTY 152
SECTION 3315 152
MOVING AND RELOCATION OF STRUCTURES 152
CHAPTER 35 153
REFERENCED STANDARDS 153
APPENDICES 154
APPENDIX ADOPTION STATUS 154
APPENDIX H 155
SIGNS 155
APPENDIX P 155
CONSTRUCTION IN DESIGNATED SPECIAL CONSTRUCTION ZONES 155
APPENDIX R 158
COLORADO REVISED STATUTES TITLE 9 ARTICLE 5 - STANDARDS FOR ACCESSIBLE HOUSING 158
APPENDIX S 162
AIRPORT STRUCTURES AND SYSTEMS 162
APPENDIX T 176
INTERNATIONAL SWIMMING POOL AND SPA CODE 176
SECTION 305 176
BARRIER REQUIREMENTS 176

DENVER EXISTING BUILDING CODE 181

CHAPTER 1 182
SCOPE AND ADMINISTRATION 182
SECTION 101 182
GENERAL 182
CHAPTER 2 182
DEFINITIONS 182
SECTION 202 182
GENERAL DEFINITIONS 182
CHAPTER 3 183
PROVISIONS FOR ALL COMPLIANCE METHODS 183
SECTION 302 183
GENERAL PROVISIONS 183
CHAPTER 5 183
PRESCRIPTIVE COMPLIANCE METHOD 183
SECTION 502 183
ADDITIONS 183
SECTION 503 184
ALTERATIONS 184
CHAPTER 7 184
ALTERATIONS – LEVEL 1 184
SECTION 706 184
STRUCTURAL 184
CHAPTER 8 185
ALTERATIONS—LEVEL 2 185
SECTION 804 185
MEANS OF EGRESS 185

CHAPTER 10 186
CHANGE OF OCCUPANCY 186
SECTION 1001 186
GENERAL 186
Section 1001.2.2.2 Denver Residential Code structures is added as follows: 186
SECTION 1011 186
CHANGE OF OCCUPANCY CLASSIFICATIONS 186
CHAPTER 11 186
ADDITIONS 186
SECTION 1103 186
STRUCTURAL 186
Section 1103.1 Additional gravity loads is replaced as follows (exception to remain): 186
CHAPTER 12 187
HISTORIC BUILDINGS 187
SECTION 1201 187
GENERAL 187
SECTION 1203 187
FIRE SAFETY 187
CHAPTER 13 187
PERFORMANCE COMPLIANCE METHODS 187
SECTION 1301 187
GENERAL 187
CHAPTER 14 188
RELOCATED OR MOVED BUILDINGS 188
SECTION 1401 188
GENERAL 188
EXISTING BUILDING CODE APPENDICES 188
STATUS OF APPENDICES ON ADOPTION 188

DENVER RESIDENTIAL CODE 189

CHAPTER 1 190
ADMINISTRATION 190
SECTION R101 190
TITLE, SCOPE AND PURPOSE 190
SECTION R102 192
APPLICABILITY 192
Section R102 Applicability is replaced in its entirety as follows: 192
SECTION R202 192
DEFINITIONS 192
SECTION R301 195
DESIGN CRITERIA 195
SECTION R302 195
FIRE-RESISTANT CONSTRUCTION 195
SECTION R305 196
CEILING HEIGHT 196
SECTION R312 197
GUARDS AND WINDOW FALL PROTECTION 197
SECTION R313 197
AUTOMATIC FIRE SPRINKLER SYSTEMS 197
SECTION R314.6 198
POWER SOURCE 198
SECTION R315 198

CARBON MONOXIDE ALARMS 198
SECTION R315.6 199
POWER SOURCE 199
[CRS] SECTION R320 200
ACCESSIBILITY 200
SECTION R324 200
SOLAR ENERGY SYSTEMS 200
SECTION R326 200
HABITABLE ATTICS 200
SECTION R327 200
SWIMMING POOLS, SPAS AND HOT TUBS 200
SECTION R327 200
SWIMMING POOL, SPA, AND HOT TUB BARRIERS 200
SECTION R328 203
ENERGY STORAGE SYSTEMS 203
SECTION R331 204
MATERIALS 204
SECTION R401 205
GENERAL 205
SECTION R702 207
INTERIOR COVERING 207
SECTION R703 208
EXTERIOR COVERING 208
CHAPTER 9 208
ROOF ASSEMBLIES 208
SECTION R903 208
WEATHER PROTECTION 208
SECTION R905 209
REQUIREMENTS FOR ROOF COVERINGS 209
CHAPTER 10 210
CHIMNEYS AND FIREPLACES 210
SECTION R1002 210
MASONRY HEATERS 210
CHAPTER 11 210
ENERGY EFFICIENCY 210
CHAPTER 14 210
HEATING AND COOLING EQUIPMENT AND APPLIANCES 210
SECTION M1410 210
VENTED ROOM HEATERS 210
SECTION M1414 211
FIREPLACE STOVES 213
CHAPTER 24 213
FUEL GAS 213
SECTION G2414 213
PIPING MATERIALS 213
SECTION G2415 213
PIPING SYSTEM INSTALLATION 213
SECTION G2417 214
INSPECTION, TESTING AND PURGING 214
SECTION G2437 214
FLOOR FURNACES 214
SECTION G2445 214

UNVENTED ROOM HEATERS 214
CHAPTER 25 214
PLUMBING ADMINISTRATION 214
SECTION P2503 214
INSPECTION AND TESTS 214
CHAPTER 26 215
GENERAL PLUMBING REQUIREMENTS 215
SECTION P2602 215
INDIVIDUAL WATER SUPPLY AND SEWAGE DISPOSAL 215
PLUMBING FIXTURES 215
SECTION P2716 215
FOOD-WASTE DISPOSER 215
CHAPTER 29 216
WATER SUPPLY AND DISTRIBUTION 216
SECTION P2904 216
DWELLING UNIT FIRE SPRINKLER SYSTEMS 216
SECTION P2906 216
MATERIALS, JOINTS AND CONNECTIONS 216
SANITARY DRAINAGE 216
SECTION P3003 216
JOINTS AND CONNECTIONS 216
SECTION P3005 216
DRAINAGE SYSTEM 216
CHAPTER 31 217
VENTS 217
SECTION P3103 217
VENT TERMINALS 217
SECTION P3111 217
COMBINATION WASTE AND VENT SYSTEMS 217
SECTION P3114 217
AIR ADMITTANCE VALVES 217
CHAPTER 36 217
SERVICES 217
SECTION E3601 217
GENERAL SERVICES 217
CHAPTER 44 218
REFERENCED STANDARDS 218
RESIDENTIAL CODE APPENDICES 219
STATUS OF APPENDICES ON ADOPTION 219
APPENDIX AE 220
MANUFACTURED HOUSING USED AS DWELLINGS 220
APPENDIX AF 220
RADON CONTROL METHODS 220
APPENDIX AJ 222
EXISTING BUILDINGS AND STRUCTURES 222
APPENDIX AM 240
HOME DAY CARE R-3 OCCUPANCY 240

DENVER MECHANICAL CODE 242

CHAPTER 1 243
ADMINISTRATION 243
SECTION 101 243

GENERAL 243
CHAPTER 3 243
GENERAL REGULATIONS 243
SECTION 303 243
SECTION 309 244
TEMPERATURE CONTROL 244
CHAPTER 4 244
VENTILATION 244
SECTION 401 244
GENERAL 244
SECTION 402 244
NATURAL VENTILATION 244
SECTION 403 245
MECHANICAL VENTILATION 245
SECTION 404 246
ENCLOSED PARKING GARAGES 246
CHAPTER 5 247
EXHAUST SYSTEMS 247
SECTION 501 247
GENERAL 247
SECTION 505 247
DOMESTIC KITCHEN EXHAUST EQUIPMENT 247
SECTION 506 248
COMMERCIAL KITCHEN HOOD VENTILATION SYSTEM DUCTS AND EXHAUST EQUIPMENT 248
SECTION 507 249
COMMERCIAL KITCHEN HOODS 249
SECTION 513 249
SMOKE CONTROL SYSTEMS 249
CHAPTER 6 249
DUCT SYSTEMS 249
[B] SECTION 607 249
DUCT AND TRANSFER OPENINGS 249
CHAPTER 9 250
SPECIFIC APPLIANCES, FIREPLACES AND 250
SOLID FUEL-BURNING EQUIPMENT 250
SECTION 901 250
GENERAL 250
SECTION 910 250
FLOOR FURNACES 250
SECTION 911 250
DUCT FURNACES 250
CHAPTER 11 250
REFRIGERATION 250
SECTION 1109 251
REFRIGERANT PIPE INSTALLATION 251
CHAPTER 15 251
REFERENCED STANDARDS 251
MECHANICAL CODE APPENDICES 252
STATUS OF ADOPTION FOR APPENDICES 252

DENVER PLUMBING CODE 254

CHAPTER 1 255
ADMINISTRATION 255
SECTION 101 255
GENERAL 255
CHAPTER 2 255
DEFINITIONS 255
SECTION 202 255
GENERAL DEFINITIONS 255
CHAPTER 3 256
GENERAL REGULATIONS 256
SECTION 301 256
GENERAL 256
SECTION 306 256
TRENCHING, EXCAVATION AND BACKFILL 256
CHAPTER 4 256
FIXTURE, FAUCETS AND FIXTURE FITTINGS 256
SECTION 401 256
GENERAL 256
SECTION 403 257
MINIMUM PLUMBING FACILITIES 257
SECTION 416 259
FOOD WASTE DISPOSER UNITS 259
CHAPTER 5 260
WATER HEATERS 260
SECTION 501 260
GENERAL 260
SECTION 502 260
INSTALLATION 260
CHAPTER 6 261
WATER SUPPLY AND DISTRIBUTION 261
SECTION 603 261
WATER SERVICE 261
SECTION 604 261
DESIGN OF BUILDING WATER DISTRIBUTION SYSTEM 261
SECTION 608 261
PROTECTION OF POTABLE WATER SUPPLY 261
CHAPTER 7 262
SANITARY DRAINAGE 262
SECTION 703 262
BUILDING SEWER 262
SECTION 708 262
CLEANOUTS 262
SECTION 712 262
SUMPS AND EJECTORS 262
SECTION 717 263
RELINING BUILDING SEWERS AND BUILDING DRAINS 263
SECTION 718 263
REHABILITATION OF BUILDING SEWERS AND BUILDING DRAINS 263
CHAPTER 8 263
INDIRECT/SPECIAL WASTE 263
SECTION 803 263
SPECIAL WASTES 263

CHAPTER 9 263
VENTS 263
SECTION 903 263
VENT TERMINALS 263
CHAPTER 10 264
TRAPS, INTERCEPTORS AND SEPARATORS 264
SECTION 1003 264
INTERCEPTORS AND SEPARATORS 264
SECTION 1005 264
ABANDONED INTERCEPTORS 264
CHAPTER 11 265
STORM DRAINAGE 265
SECTION 1101 265
GENERAL 265
SECTION 1106 265
SIZE OF CONDUCTORS, LEADERS AND STORM DRAINS 265
CHAPTER 13 269
NONPOTABLE WATER SYSTEMS 269
SECTION 1301 269
GENERAL 269
PLUMBING CODE APPENDICES 269
STATUS OF ADOPTION FOR APPENDICES 269

DENVER FUEL GAS CODE 270

CHAPTER 1 271
ADMINISTRATION 271
SECTION 101 271
GENERAL 271
CHAPTER 4 271
GAS PIPING INSTALLATIONS 271
SECTION 403 271
PIPING MATERIALS 271
SECTION 404 271
PIPING SYSTEM INSTALLATION 271
SECTION 406 272
INSPECTION, TESTING AND PURGING 272
CHAPTER 5 272
CHIMNEYS AND VENTS 272
SECTION 501 272
GENERAL 272
CHAPTER 6 272
SPECIFIC APPLIANCE 272
SECTION 609 272
FLOOR FURNACES 272
SECTION 611 272
NONRECIRCULATING DIRECT-FIRED INDUSTRIAL AIR HEATERS 272
SECTION 612 273
RECIRCULATING DIRECT-FIRED INDUSTRIAL AIR HEATERS 273
SECTION 621 273
UNVENTED ROOM HEATERS 273
SECTION 623 273
COOKING APPLIANCES 273

DENVER ENERGY CODE 274
ENERGY CODE COMMERCIAL PROVISIONS 275
CHAPTER 1 [CE] 275
SCOPE AND ADMINISTRATION 275
SECTION C101 275
SCOPE AND GENERAL REQUIREMENTS 275
SECTION C103 275
CONSTRUCTION DOCUMENTS 275
CHAPTER 2 [CE] 276
DEFINITIONS 276
SECTION C202 276
GENERAL DEFINITIONS 276
CHAPTER 4 [CE] 278
COMMERCIAL ENERGY EFFICIENCY 278
SECTION C401 278
GENERAL 278
SECTION C402 278
BUILDING ENVELOPE REQUIREMENTS 278
SECTION C403 281
BUILDING MECHANICAL SYSTEMS 281
SECTION C404 287
SERVICE WATER HEATING 287
SECTION C405 288
ELECTRICAL POWER AND LIGHTING SYSTEMS 288
SECTION C406 292
ADDITIONAL EFFICIENCY PACKAGE OPTIONS 292
SECTION C407 296
TOTAL BUILDING PERFORMANCE 296
SECTION C408 299
MAINTENANCE INFORMATION AND SYSTEM COMMISSIONING 299
CHAPTER 5 [CE] 302
EXISTING BUILDING 302
SECTION C501 302
GENERAL 302
SECTION C502 302
ADDITIONS 302
SECTION C503 302
ALTERATIONS 302
SECTION C505 305
CHANGE OF OCCUPANCY OR USE 305
CHAPTER 6 [CE] 306
REFERENCED STANDARDS 306
APPENDIX CB 307
SOLAR-READY ZONE—COMMERCIAL 307
APPENDIX PT 308
TABLE PT103 309
MODELED PERFORMANCE TARGETS 309
APPENDIX SE 309
TOTAL BUILDING PERFORMANCE WITH SITE ENERGY 309
TABLE SE103.3 311
BUILDING PERFORMANCE FACTOR (BPF) 311

ENERGY CODE RESIDENTIAL PROVISIONS 312
CHAPTER 1 [RE] 312
SCOPE AND ADMINISTRATION 312
SECTION R101 312
SCOPE AND GENERAL REQUIREMENTS 312
CHAPTER 2 [RE] 313
DEFINITIONS 313
Section R201.3 Terms defined in other codes is deleted and replaced as follows: 313
SECTION R202 313
GENERAL DEFINITIONS 313
CHAPTER 3 [RE] 315
GENERAL REQUIREMENTS 315
SECTION R302 315
DESIGN CONDITIONS 315
Section R302.1 Interior design conditions is replaced as follows: 315
SECTION R303 315
MATERIALS, SYSTEMS AND EQUIPMENT 315
CHAPTER 4 [RE] 315
RESIDENTIAL ENERGY EFFICIENCY 315
SECTION R401 315
SCOPE AND GENERAL REQUIREMENTS 315
SECTION R402 316
BUILDING THERMAL ENVELOPE 316
TABLE R402.1.3 317
INSULATION MINIMUM R-VALUES AND FENESTRATION REQUIREMENTS BY COMPONENT 317
SECTION R403 321
SYSTEMS 321
SECTION R404 324
ELECTRICAL POWER AND LIGHTING SYSTEMS 324
TABLE R405.2 328
REQUIREMENTS FOR TOTAL BUILDING PERFORMANCE 328
SECTION R406 329
ENERGY RATING INDEX COMPLIANCE ALTERNATIVE 329
TABLE R406.2 330
REQUIREMENTS FOR ENERGY RATING INDEX 330
SECTION R408 331
ADDITIONAL EFFICIENCY PACKAGE OPTIONS 331
CHAPTER 5 [RE] 335
EXISTING BUILDINGS 335
SECTION R501 335
GENERAL 335
SECTION R502 336
ADDITIONS 336
SECTION R503 336
ALTERATIONS 336
CHAPTER 6 [RE] 338
REFERENCED STANDARDS 338

ARTICLE 2 339

2022 DENVER FIRE CODE 339

CHAPTER 1 341
SCOPE AND ADMINISTRATION 341
SECTION 101 341
SCOPE AND GENERAL REQUIREMENTS 341
SECTION 102 342
APPLICABILITY 342
SECTION 103 344
CODE COMPLIANCE AGENCY 344
SECTION 104 345
DUTIES AND POWERS OF THE FIRE CODE OFFICIAL 345
SECTION 105 349
PERMITS 349
SECTION 107 371
FEES 371
SECTION 108 372
INSPECTIONS 372
SECTION 109 374
MAINTENANCE 374
SECTION 111 374
MEANS OF APPEALS 374
SECTION 112 375
VIOLATIONS 375
SECTION 114 375
UNSAFE STRUCTURES OR EQUIPMENT 375
SECTION 115 376
LICENSES 376
SECTION 116 is added: 377
PUBLIC FIRE EDUCATION 377
SECTION 117 is added: 378
EMERGENCY PLANS AND PROCEDURES 378
SECTION 118 is added: 378
FIRE ALARM MONITORING - PERMITS AND LICENSES 378
CHAPTER 2 380
DEFINITIONS 380
SECTION 202 380
GENERAL DEFINITIONS 380
CHAPTER 3 389
GENERAL REQUIREMENTS 389
SECTION 301 389
GENERAL 389
SECTION 302 389
DEFINITIONS 389
SECTION 304 389
COMBUSTIBLE WASTE MATERIAL 389
SECTION 307 390
OPEN BURING, RECREATIONAL FIRES AND PORTABLE OUTDOOR FIREPLACES 390
SECTION 308 390
OPEN FLAMES 390
SECTION 309 391
POWERED INDUSTRIAL TRUCKS AND EQUIPMENT 391
SECTION 311 392
VACANT PREMISES 392

SECTION 315 392
GENERAL STORAGE 392
SECTION 316 393
HAZARDS TO FIRE FIGHTERS 393
SECTION 317 393
LANDSCAPED ROOFS 393
SECTION 319 394
MOBILE FOOD PREPARATION VEHICLES 394
CHAPTER 4 396
EMERGENCY PLANNING AND PREPAREDNESS 396
SECTION 401 396
GENERAL 396
SECTION 402 397
DEFINITIONS 397
SECTION 403 398
EMERGENCY PREPAREDNESS REQUIREMENTS 398
SECTION 404 398
FIRE SAFETY EVACUATION AND LOCKDOWN PLANS 398
CHAPTER 5 399
FIRE SERVICE FEATURES 399
SECTION 502 399
DEFINITIONS 399
SECTION 503 399
FIRE APPARATUS ACCESS ROADS 399
SECTION 504 403
ACCESS TO BUILDING OPENINGS AND ROOFS 403
SECTION 505 403
PREMISES IDENTIFICATION 403
SECTION 507 404
FIRE PROTECTION WATER SUPPLIES 404
SECTION 508 405
FIRE COMMAND CENTER 405
SECTION 509 408
FIRE PROTECTION AND UTILITY EQUIPMENT IDENTIFICATION AND ACCESS 408
SECTION 510 408
EMERGENCY RESPONDER RADIO ENHANCEMENT COVERAGE SYSTEM (RES) 408
CHAPTER 6 413
BUILDING SERVICES AND SYSTEMS 413
SECTION 604 413
ELEVATOR OPERATION, MAINTENANCE, AND FIRE SERVICE KEYS 413
SECTION 605 416
FUEL-FIRED APPLIANCES 416
SECTION 608 416
MECHANICAL REFRIGERATION 416
CHAPTER 8 418
INTERIOR FINISH, DECORATIVE MATERIALS AND FURNISHINGS 418
SECTION 806 418
NATURAL DECORATIVE VEGETATION IN NEW AND EXISTING BUILDINGS 418
SECTION 807 418
DECORATIVE MATERIALS AND ARTIFICIAL VEGETATION IN BUILDINGS 418
CHAPTER 9 421
FIRE PROTECTION SYSTEMS 421

SECTION 901 421
GENERAL 421
SECTION 902 421
DEFINITIONS 421
SECTION 903 421
AUTOMATIC SPRINKLER SYSTEMS 421
SECTION 904 426
ALTERNATIVE AUTOMATIC FIRE-EXTINGUISHING SYSTEMS 426
SECTION 905 427
STANDPIPE SYSTEMS 427
SECTION 906 429
PORTABLE FIRE EXTINGUISHERS 429
SECTION 907 430
FIRE ALARM AND DETECTION SYSTEMS 430
SECTION 908 448
EMERGENCY ALARM SYSTEMS 448
SECTION 909 449
SMOKE CONTROL SYSTEMS 449
SECTION 910 463
SMOKE AND HEAT REMOVAL 463
SECTION 912 464
FIRE DEPARTMENT CONNECTIONS 464
SECTION 913 465
FIRE PUMPS 465
SECTION 915 466
CARBON MONOXIDE DETECTION 466
SECTION 916 466
GAS DETECTION SYSTEMS 466
SECTION 918 468
CENTRAL ALARM STATIONS 468
SECTION 919 469
TRANSMISSION OF CITY MICROWAVE SIGNALS 469
SECTION 920 469
ELEVATORS AND CONVEYING SYSTEMS 469
CHAPTER 10 473
MEANS OF EGRESS 473
CHAPTER 11 473
CONSTRUCTION REQUIREMENTS FOR EXISTING BUILDINGS 473
SECTION 1101 473
GENERAL 473
SECTION 1103 474
FIRE SAFETY REQUIREMENTS FOR EXISTING BUILDINGS 474
SECTION 1105 475
CONSTRUCTION REQUIREMENTS FOR EXISTING GROUP I-2 475
SECTION 1107 475
REQUIREMENTS FOR COMPRESSED GAS SYSTEMS 475
SECTION 1108 476
FIREFIGHTER FALL PROTECTION 476
CHAPTER 12 478
ENERGY SYSTEMS 478
SECTION 1203 478
EMERGENCY AND STANDBY POWER SYSTEMS 478

SECTION 1207 480
ELECTRICAL ENERGY STORAGE SYSTEMS 480
CHAPTER 20 481
AVIATION FACILITIES 481
SECTION 2001 481
GENERAL 481
SECTION 2005 481
PORTABLE FIRE EXTINGUISHERS 481
SECTION 2006 481
AIRCRAFT FUELING 481
SECTION 2007 482
HELISTOPS AND HELIPORTS 482
CHAPTER 23 483
MOTOR FUEL-DISPENSING FACILITIES AND 483
REPAIR GARAGES 483
SECTION 2303 483
LOCATION OF DISPENSING DEVICES 483
SECTION 2304 483
DISPENSING OPERATIONS 483
SECTION 2305 483
OPERATIONAL REQUIREMENTS 483
SECTION 2308 484
COMPRESSED NATURAL GAS MOTOR FUEL-DISPENSING FACILITIES 484
SECTION 2309 484
HYDROGEN MOTOR FUEL-DISPENSING AND GENERATION FACILITIES 484
SECTION 2311 484
REPAIR GARAGES 484
SECTION 2312 485
EXISTING MOTOR FUEL-DISPENSING FACILITIES 485
CHAPTER 24 486
FLAMMABLE FINISHES 486
SECTION 2401 486
GENERAL 486
SECTION 2404 486
SPRAY FINISHING 486
SECTION 2405 486
DIPPING OPERATIONS 486
SECTION 2410 486
FLOOR SURFACING AND FINISHING OPERATIONS 486
CHAPTER 25 487
FRUIT AND CROP RIPENING 487
SECTION 2503 487
ETHYLENE GAS 487
CHAPTER 26 488
FUMIGATION AND INSECTICIDAL FOGGING 488
SECTION 2601 488
GENERAL 488
SECTION 2603 488
FIRE SAFETY REQUIREMENTS 488
CHAPTER 27 489
SEMICONDUCTOR FABRICATION FACILITIES 489
SECTION 2703 489

GENERAL SAFETY PROVISIONS 489
CHAPTER 28 490
LUMBER YARDS AND AGRO-INDUSTRIAL, SOLID BIOMASS 490
AND WOODWORKING FACILITIES 490
SECTION 2804 490
FIRE PROTECTION 490
SECTION 2809 490
EXTERIOR STORAGE OF FINISHED LUMBER AND SOLID BIOFUEL PRODUCTS 490
CHAPTER 30 491
INDUSTRIAL OVENS 491
SECTION 3003 491
LOCATION 491
CHAPTER 31 492
TENTS AND OTHER MEMBRANE STRUCTURES 492
SECTION 3103 492
TEMPORARY TENTS AND MEMBRANE STRUCTURES 492
SECTION 3107 492
OPERATIONAL REQUIREMENTS 492
CHAPTER 32 493
HIGH-PILED COMBUSTIBLE STORAGE 493
SECTION 3201 493
GENERAL 493
SECTION 3206 493
GENERAL FIRE PROTECTION AND LIFE SAFETY FEATURES 493
SECTION 3211 495
EXISTING BUILDINGS 495
CHAPTER 33 497
FIRE SAFETY DURING CONSTRUCTION AND DEMOLITION 497
SECTION 3301 497
GENERAL 497
SECTION 3303 497
OWNER'S RESPONSIBILITY FOR FIRE PROTECTION 497
SECTION 3312 497
MEANS OF EGRESS 497
SECTION 3314 498
STANDPIPES 498
SECTION 3319 498
ASBESTOS OPERATIONS 498
CHAPTER 34 499
TIRE REBUILDING AND TIRE STORAGE 499
SECTION 3401 499
GENERAL 499
Section 3401.3 Waste Tire Facilities/Operations is added as follows: 499
SECTION 3405 499
OUTDOOR STORAGE 499
SECTION 3408 499
FIRE PROTECTION 499
CHAPTER 35 500
WELDING AND OTHER HOT WORK 500
SECTION 3501 500
GENERAL 500
SECTION 3505 500

GAS WELDING AND CUTTING 500
SECTION 3508 500
ACETYLENE GENERATORS 500
CHAPTER 39 501
MARIJUANA OPERATIONS 501
SECTION 3901 501
GENERAL 501
SECTION 3902 501
DEFINITIONS 501
SECTION 3903 501
EXTRACTION OPERATIONS 501
Section 3904 Marijuana growing operations is added as follows: 503
SECTION 3904 503
MARIJUANA GROWING OPERATIONS 503
CHAPTER 40 504
ALCOHOL BEVERAGE PRODUCTION FACILITIES 504
SECTION 4001 504
GENERAL 504
SECTION 4002 505
DEFINITIONS, ACRONYMS AND ABBREVIATIONS 505
SECTION 4003 507
GENERAL REQUIREMENTS 507
SECTION 4004 517
EQUIPMENT 517
CHAPTER 50 525
HAZARDOUS MATERIALS—GENERAL PROVISIONS 525
SECTION 5001 525
GENERAL 525
SECTION 5002 526
DEFINITIONS 526
SECTION 5003 526
GENERAL REQUIREMENTS 526
SECTION 5004 530
STORAGE 530
SECTION 5005 530
USE, DISPENSING AND HANDLING 530
CHAPTER 53 532
COMPRESSED GASES 532
SECTION 5307 532
COMPRESSED GASES NOT OTHERWISE REGULATED 532
CHAPTER 56 555
EXPLOSIVES AND FIREWORKS 555
SECTION 5601 555
GENERAL 555
CHAPTER 57 556
FLAMMABLE AND COMBUSTIBLE LIQUIDS 556
SECTION 5701 556
GENERAL 556
SECTION 5703 556
GENERAL REQUIREMENTS 556
SECTION 5704 557
STORAGE 557

SECTION 5706 557
SPECIAL OPERATIONS 557
CHAPTER 60 558
HIGHLY TOXIC AND TOXIC MATERIALS 558
SECTION 6004 558
HIGHLY TOXIC AND TOXIC COMPRESSED GASES 558
SECTION 6005 558
OZONE GAS GENERATORS 558
CHAPTER 61 559
LIQUEFIED PETROLEUM GASES 559
SECTION 6101 559
GENERAL 559
SECTION 6103 559
INSTALLATION OF EQUIPMENT 559
SECTION 6104 559
LOCATION OF LP-GAS CONTAINERS 559
SECTION 6107 560
SAFETY PRECAUTIONS AND DEVICES 560
SECTION 6109 560
STORAGE OF PORTABLE LP-GAS CONTAINERS AWAITING USE OR RESALE 560
SECTION 6112 560
FIXED, MOBILE, OR TEMPROARY CONCESSIONS PROTECTIONS 560
CHAPTER 63 561
OXIDIZERS, OXIDIZING GASES AND 561
OXIDIZING CRYOGENIC FLUIDS 561
SECTION 6301 561
GENERAL 561
CHAPTER 80 562
REFERENCED STANDARDS 562
INTERNATIONAL FIRE CODE APPENDICES 565
STATUS OF APPENDICES ON ADOPTION 565
APPENDIX B 566
FIRE-FLOW REQUIREMENTS FOR BUILDINGS 566
APPENDIX C 567
FIRE HYDRANT LOCATIONS AND DISTRIBUTION 567
APPENDIX O 568
SHOP DRAWING SUBMITTAL REQUIREMENTS FOR CONSTRUCTION PERMITS 568

ACKNOWLEDGMENT: The City and County of Denver has adopted a suite of codes in order to make them effective for the design and construction conditions within the city. As part of an inclusive public process, multiple Code Revision Committees were established to review and propose amendments to the model codes for the maintenance of existing buildings and the construction of new buildings. These committees represent subject matter experts in various segments of the building and development industry. The different perspectives and interests presented by the committees during the code review process helped to provide an effective set of amended codes, which will maintain minimum standards for the health, safety, welfare, and sustainability of the people who live, work, and visit in Denver.

We wish to thank the members of City Council, Mayor's Office, Community Planning and Development, Office of Climate Action, Sustainability, and Resiliency, Department of Transportation and Infrastructure, Department of Parks & Recreation, City Attorney's Office, Fire Department, and HRCP Office of Disability Rights who all devoted their time, knowledge, and professionalism to develop this document.

ARTICLE 1

2022 DENVER BUILDING CODE

SECTION 1
ADMINISTRATION

SECTION 101
GENERAL

101.1 Title. The 2021 series of the *International Building Code (IBC), International Energy Conservation Code (IECC), International Fuel Gas Code (IFGC), International Mechanical Code (IMC), International Plumbing Code (IPC), International Existing Building Code (IEBC),* and *International Residential Code (IRC),* all errata to the above codes, all amendments to the above codes found in this document, and the administration chapter of this document shall be known as, the Denver Building Code and referred to hereinafter as the Code. The Denver Commercial Building Code (DCBC), the Denver Energy Code (DEC), the Denver Fuel Gas Code (DFGC), the Denver Mechanical Code (DMC), the Denver Plumbing Code (DPC), the Denver Existing Building Code (DEBC), and the Denver Residential Code (DRC), all as defined in Section 2, shall be known as the 2022 Denver Building Code, and referred to herein after as "the Code."

101.1.1 Denver Green Code. The Denver Green Code is adopted as a design and construction code with limited mandatory requirements as described in Section 101.4. To encourage the use of the Denver Green Code, the *building official* is authorized to develop incentives through written policy. The Denver Green Code may be viewed at locations as stated on the website of the Agency.

101.2 Scope. The provisions of this Code shall apply to the construction, alteration, relocation, enlargement, replacement, repair, equipment, use and occupancy, location, maintenance, removal, and demolition of every building or structure or any appurtenances connected or attached to such buildings or structures except as set forth in subsection 103.9 below.

101.3 Purpose. The purpose of this Code is to provide minimum standards to provide a reasonable level of safety, health, and general welfare through structural strength, means of egress, stability, sanitation, light and ventilation, energy conservation, and for providing a reasonable level of life safety and property protection from the hazards of fire, explosion, or dangerous conditions, and to provide a reasonable level of safety to fire fighters

and emergency responders during emergency operations by regulating and controlling the design, construction, quality of materials, use, occupancy, location and maintenance of all buildings and structures, and certain equipment specifically regulated herein within the City and County of Denver (hereinafter "City").

101.4 Denver Green Code Limited Mandatory Requirements. Effective May 1, 2023, the Denver Green Code shall apply to all projects in accordance with Denver Green Code Chapter 1 Section 101.4.

SECTION 102
ORGANIZATION OF BUILDING PERMITTING AND INSPECTIONS SERVICES

102.1 Creation of administering agency. The Building Permitting and Inspections Services Agency (hereinafter "Agency") is responsible for administering and enforcing the Code and is established under the Executive Director of Community Planning and Development (hereinafter "CPD").

102.2 Building official. The Executive Director of CPD shall appoint the *building official*. The *building official* is hereby authorized and directed to act on behalf of the Agency in the interpretation and enforcement of all provisions of this Code.

102.3 Employees. In accordance with established procedures, the *building official* may authorize or appoint engineers, architects, technicians, inspectors, or other employees to perform duties and exercise powers as delegated by the *building official*.

102.4 Authorization and Identification. Each employee of the Agency shall be provided with an identification card bearing information as set out by the *building official*. This identification shall be carried by the person identified and shall be displayed when necessary to identify the person properly in the performance of his/her official duties.

SECTION 103
APPLICABILITY

103.1 Most Restrictive. Where in any specific case the requirements of different sections of this Code vary, the most restrictive shall govern. Where there is a conflict between a general requirement and a specific requirement, the specific requirement shall be applicable.

103.1.1 Other laws. The provisions of this Code shall not be deemed to nullify any provision of local, state, or federal law.

103.1.2 Application of references. References to chapter or section numbers, or to provisions not specifically identified by number, shall be construed to refer to such chapter, section, or provision of this code.

103.2 Referenced Codes and Standards. Other codes and standards specifically adopted in this Code or used by reference elsewhere in this Code shall be considered part of the requirements of this Code, to the prescribed extent of each such reference and as further regulated in Sections 103.2.1 and 103.2.2.

> **Exception:** Where enforcement of a Code provision would violate the conditions of the listing of the equipment or appliance, the conditions of the listing and manufacturer's instructions shall apply.

> **103.2.1 Conflicts.** Where conflicts occur between provisions of this Code and referenced codes and standards, the provisions of this Code shall apply.

103.2.2 Provisions in referenced codes and standards. Where the extent of the reference to a referenced code or standard includes subject matter that is within the scope of this Code, the provisions of this Code shall take precedence over the provisions in the referenced code or standard.

103.3 Appendices. Provisions in the appendices shall not apply unless specifically adopted in this Code.

103.4 Partial Invalidity. In the event any part or provision of this code is held to be illegal or void, this shall not have the effect of making void or illegal any of the other parts or provisions.

103.5 Existing Buildings, Structures, or Utilities. The legal occupancy of any structure existing on the date of adoption of this Code shall be permitted to continue without change, except as otherwise specifically provided in this Code and the *Denver Fire Code.*

103.5.1 Buildings previously occupied. The legal occupancy of any building existing on the date of the adoption of this Code shall be permitted to continue without change if such use or occupancy was legal at the time of the adoption of this Code, except as otherwise specifically provided in this Code or as is deemed necessary by the *building official* for the general safety and welfare of the occupants and the public. Any change in, or establishment of, the use or occupancy of any existing building or structure shall comply with the provisions of this Code.

103.5.2 Buildings or portions thereof not previously occupied. A building or portion of a building that has not been approved for legal occupancy in accordance with the laws in existence at the time of its completion shall comply with the provisions of this Code or with any unexpired permit for such occupancy.

103.6 Maintenance of All Buildings, Structures or Utilities. All buildings, structures, or utilities, both existing and new, and all parts thereof, shall be maintained in a safe and sanitary condition, and in accordance with this Code or the Code under which it was permitted and constructed. All devices, utilities, or safeguards which are required by this Code, or which were required by the Code or Ordinances at the time of construction, shall be maintained in good working condition. The owner or legally responsible person shall maintain such buildings, structures, or utilities. To determine compliance with this subsection, the Agency may cause any building, structure, or equipment to be reinspected.

103.7 Moved Buildings or Structures. Buildings or structures moved into or within the City shall comply with the provisions of the *Denver Existing Building Code.*

103.8 Safeguards during construction. Chapter 33 "Safeguards During Construction" of the *Denver Commercial Building Code* shall apply to all work.

103.9 Buildings, Structures, and Utilities not Regulated by this Code. The Code does not regulate the following:

1. Work located primarily in the public way unless specifically provided for by this Code.
2. Public utility towers, poles, and mechanical or electrical equipment used for the production, generation, storage, or distribution of the utility product or service through the facilities owned and operated by the utility company to the point of customer service.
3. RTD Light and Commuter Rail construction on RTD right-of-way. Traction power substations, signal/communication relay cases and housing, associated conduit, and wiring for the operation of the light rail and commuter rail lines and the construction of the light rail station platforms.

   Exceptions:

1. Construction of commuter or light rail platforms and any amenities including, but not limited to, canopies and driver relief stations, along with ramps, stairways, lifts, elevators, and escalators.

2. Any retaining walls that support adjacent private or public right-of-way, but not those associated with support of the train system tracks.

Refer to Section 130.3 for additional exempt work.

103.10 Transition Rules. This Code and implementation of all its provisions and policies shall become effective as follows:

Effective date. The effective date of Section 1 - Administration, of this Code is January 12, 2023. The effective date of Section 2 of this Code, Construction Codes, and the 2022 Denver Green Code shall be May 1, 2023 (the "Construction Code Effective Date"). As of the Construction Code Effective Date, 100% *construction documents* for projects submitted to the Agency shall be designed based on this Code, except as allowed in 103.10.2 below. The effective date of the Energize Denver Ordinance provisions is March 1, 2023. Projects submitted to the Agency as 100% construction documents for review before the Construction Code Effective Date may continue to use the 2019 Denver Building Code, subject to the timeframes in Section 131. Projects with 100% *construction documents* submitted to the Agency after May 1, 2023 and before the effective date of this, the Third Printing of the Denver Building Code, may apply the provisions of either the Second Printing or the Third Printing (separately and in their entirety) to the project.

The effective date of the 2022 Denver Green Code shall be as defined in the Chapter 1 of the 2022 Denver Green Code.

103.10.1 Use of the 2019 or 2022 Denver Building Code. Projects that will be submitted to the Agency after the effective date of the adopting ordinance, and before the Construction Code Effective Date may use either the 2019 <u>or</u> 2022 Denver Building Code. For purposes of this subsection 103.10.1, a project will be considered submitted to the Agency when a complete set of *construction documents* has been electronically provided by the applicant through the Agency's web-based permitting portal (also known as ePermits or Accela Citizen Access).

103.10.2 Continued use of the 2019 Denver Building Code Other than Major Projects. Except for Major Projects, as described in Section 103.10.3 below, this Code shall not require changes in the *construction documents*, construction, or designated occupancy of a structure for which a lawful, unexpired permit has been issued. Projects that do not meet the timeframes of Section 131 are required to be redesigned in accordance with the 2022 Denver Building Code.

103.10.3 Continuation of the 2019 Denver Building Code for Major Projects. With the written approval of the *building official*, major projects established to be in design during the drafting of the new Code, and that will be submitted to the Agency after the Construction Code Effective Date may be reviewed and permitted under the 2019 Denver Building Code. A major project does not include: a new single family, two-family, or townhouse project designed in accordance with the IRC; a tenant improvement; nor any other project with a total valuation less than $10,000,000. A major project allowed to be reviewed and permitted under the 2019 Denver Building Code must meet the following requirements:

A. Submit foundation only, the first phase, or the entire set of building construction drawings to the Agency before 7/1/2023 and all phases (exclusive of deferred submittals) by 9/1/2023.
B. Obtain foundation only, the first phase, or full building construction permits by 12/31/2023; and
C. Begin foundation construction within 60 days of the first building construction permit issuance.

For consideration by the *building official* and Fire Code official the owner, or the owner's authorized agent, must submit a letter of request to the *building official and Fire Code official*, before the Construction Code Effective Date, stating:

1. Request to proceed under the 2019 Denver Building Code.
2. Address and project master or site development plan number of the construction project.
3. Description, number of stories, floor area, occupancy, total valuation, etc., of the project.

103.10.3.1 Extension of deadlines for Major Projects. The 12/31/2023 and 60-day deadlines in Section 103.10.3 (B) and (C), respectively listed above may be extended by the building official for an additional 60-days and 90-days, respectively. To request a deadline extension, the owner or owner's authorized agent of a Major Project must submit a request no later than 10-business days prior to the expiration of the applicable deadline stating why the Major Project was delayed by economic or site-specific complications beyond the owner's control.

SECTION 104
POWERS AND DUTIES

104.1 General Powers and Duties. The *building official* is vested with the duties of enforcing and administering this Code, and the power necessary for such enforcement. The Agency shall administer and enforce all other statutes or ordinances, which are or may be assigned to the Agency for enforcement and administration.

104.2 Orders. The *building official* is authorized to issue necessary notices or orders to ensure compliance with this Code.

104.3 Authority to Inspect. The *building official* shall have the authority to inspect, or cause to be inspected by the Agency, all buildings, structures, or utilities for compliance with this Code.

104.4 Investigations and Surveys. Incidental to any of these duties and powers, but without limitation of the same, the *building official* may cause to be conducted investigations or surveys by the Agency to determine compliance or noncompliance with the provisions of this Code; and further may investigate or cause to be investigated all accidents pertaining to buildings, structures, or utilities.

104.5 Right of Entry. Where it is necessary to make an inspection to enforce the provisions of this code, or where the *building official* has reasonable cause to believe that there exists in a structure or on a premises a condition that is contrary to or in violation of this code that makes the structure or premises unsafe, dangerous, or hazardous, the building official is authorized to enter the structure or premises at reasonable times to inspect or to perform the duties imposed by this code, provided that if such structure or premises be occupied that credentials be presented to the occupant and entry requested. If such structure or premises is unoccupied, the building official shall first make a reasonable effort to locate the owner or other person having charge or control of the structure or premises and request entry. If entry is refused, the building official shall have recourse to the remedies provided by law to secure entry. Whenever it is necessary to make inspections, investigations, or surveys to enforce any of the provisions of this Code and permission is not obtainable, the *building official* may request a court to issue a warrant to inspect or perform any duty imposed upon the Agency by this Code. Permission is considered not obtainable when:

1. The Agency's representative has presented to the occupant of an occupied building or premises proper credentials and been refused entry, or;

2. The Agency's representative has made a reasonable effort to locate the owner or other persons having charge or control of an unoccupied premises and has been unable to locate such person or has been refused entry by such person.

104.6 Interpretations, Rules, and Regulations. The *building official* shall have the full power to render interpretations of this Code and to adopt and enforce policies and rules and regulations supplemental to this Code, as may be deemed necessary in the application of Code provisions. Such interpretations, policies, and rules and regulations shall be in conformity with the intent and purpose of this Code. The Board of Appeals may review any appeal of a *building official* interpretation subject to Section 108.

104.7 Approved materials and equipment. Materials, equipment, and devices approved by the *building official* shall be constructed and installed in accordance with such approval.

104.7.1 Used Materials. Used materials may be used in the construction of any building, structure, or equipment only with the prior approval of the *building official.*

104.8 Liability. The *building official*, authorized employees and representatives charged with the enforcement of this Code, acting in good faith and without malice in the discharge of their duties, shall not thereby render themselves personally liable for any damage that may accrue to persons or property as a result of any act or by reason of any act or omission in the discharge of their duties. Any suit brought against the *building official* or employees because of such act or omission performed by them in the enforcement of any provision of the Code or the Charter, or other pertinent laws or ordinances implemented through the enforcement of this Code or enforced by the Agency, shall be defended in accordance with 24-10-108 C.R.S.

This Code shall not be construed to relieve from or lessen the responsibility of any person owning, operating, or controlling any building or structure for any damages to persons or property caused by defects, nor shall the Agency or City be held as assuming any such liability by reason of the inspections authorized by this Code or any certificates of compliance or occupancy issued under this Code.

104.9 Modifications Under Special Circumstances. Where there are practical difficulties involved in carrying out the provisions of this code, the *building official* shall have the authority to grant modifications for individual cases, upon application of the owner or the owner's authorized agent, provided that the *building official* shall first find that special individual reason makes the strict letter of this Code impractical, the modification is in compliance with the intent and purpose of this Code and that such modification does not lessen health, accessibility, life and fire safety, or structural requirements. The details of action granting modifications shall be recorded in the real property records of the City and County of Denver and entered in the permanent files of the Agency.

104.10 Alternative materials, design and methods of construction and equipment. The provisions of this Code are not intended to prevent the installation of any material or to prohibit any design or method of construction not specifically prescribed by this Code, provided that any such alternative has been *approved*. An alternative material, design, or method of construction shall be *approved* where the *building official* finds that the proposed alternative meets all the following:

1. The alternative material, design, or method of construction is satisfactory and complies with the intent of the provisions of this Code,

2. The material, method, or work offered is, for the purpose intended, not less than the equivalent of that prescribed in this Code as it pertains to the following:

2.1 Quality
2.2 Strength
2.3 Effectiveness
2.4 *Fire resistance*
2.5 Durability
2.6 Safety

Where the alternative material, design, or method of construction is not approved, the *building official* shall respond in writing, stating the reasons why the alternative was not approved.

104.10.1 Application for Review. The *building official* shall consider the approval of an alternate material, design, or method of construction or equipment only upon submission of a formal application. The *building official* shall require the type of information to include on the application. The application shall include plans, specifications, details, test data, samples, and literature from *approved* sources, as deemed necessary by the *building official*.

104.10.2 Research reports. Supporting data, where necessary to assist in the approval of materials or assemblies not specifically provided for in this code, shall consist of valid research reports from *approved* sources.

104.10.3 Testing Requirements. Whenever there is insufficient evidence of compliance with the provisions of this code, or evidence that a material or method does not conform to the requirements of this code, or to substantiate claims for alternative materials or methods, the *building official* shall have the authority to require tests as evidence of compliance to be made without expense to the jurisdiction. Test methods shall be as specified in this code or by other recognized test standards. In the absence of recognized and accepted test methods, the building official shall approve the testing procedures. Tests shall be performed by an *approved* agency. Reports of such tests shall be retained by the *building official* for the period required for retention of public records.

104.11 Licenses and Certificates. The *building official* is vested with the authority to:

1. Establish requirements and procedures for the issuance of licenses and certificates as required in this Code.
2. Qualify applicants for such licensure and certification.
3. Issue, revoke, renew, and suspend such licenses and certificates.

SECTION 105
UNSAFE STRUCTURES, PROJECT SITES, OR EQUIPMENT

105.1 Structures, Project Sites, or Equipment. Structures, project sites, or existing equipment that are or hereafter become unsafe, unsanitary, or deficient because of inadequate means of egress facilities, inadequate light, or ventilation, or that constitute a fire hazard, or are otherwise *dangerous* to human life or the public welfare shall be deemed an unsafe condition. Unsafe structures shall be taken down and removed or made safe, as the *building official* deems necessary and as provided for in this section. The *building official* may deem any structure project site or equipment unsafe when any one or more of the following conditions exist:

105.1.1 Structures or Project Sites:

1. Illegal or improper occupancy.

2. Any building, structure, or portion thereof that meets the definition of *Dangerous* as defined in the *Denver Existing Building Code*.
3. Damage or deterioration to any exposed exterior member to the extent that the member provides inadequate protection from the elements to the occupants of the building or structure.
4. Floors or areas with inadequate means of egress.
5. Parts attached in such a manner that they may fall and cause injury to the public or property.
6. Uncompleted buildings or structures when the permit has been canceled.
7. A canceled Certificate of Occupancy.
8. Open pits, open wells, and open excavations of all types when such are determined to be hazardous by the *building official*.
9. Trenches or ditches not properly shored or cribbed.
10. Vacant buildings which are not secure and to which entry may be made through opened or unlocked doors, windows, or other openings.
11. Uninhabitable buildings or structures, including but not limited to the following conditions:
    a. Building envelope damage or deterioration has caused the interior of the structure to be open to the elements.
    b. Vandalism or deterioration has caused the plumbing system, electrical system, or heating system to be no longer functional.
12. Any dilapidated building of whatever kind which is unused by the owner, or uninhabited because of deterioration or decay, which condition constitutes a fire hazard or subjects adjoining property to danger of damage by deterioration of structural building elements, storm effect, soil erosion, or animal infestation, or which becomes a place used by trespassers and transients seeking a temporary hideout or shelter.

105.1.2 Equipment

105.1.2.1 Gas-Fired, Oil-Fired, Solid Fuel-Fired Devices. Gas-fired, oil-fired, or solid-fuel-fired appliances, devices, or apparatus, which have any of the following, defects:

1. Broken or cracked heat exchangers.
2. Defective or deteriorated vents, venting or flues which permit leakage of flue products.
3. Defective or improperly installed fuel supply piping.
4. Insufficient air supply for the combustion of fuel.
5. Inadequate ventilation of the heating equipment room.
6. Defective, improperly installed, or maladjusted controls and appurtenances.
7. Defective or improperly installed heating equipment.
8. Equipment locations which constitute a fire or explosion hazard.
9. A negative air pressure condition exists in a heating equipment room or area.
10. Excessive corrosion of combustion chambers where the original thickness of the metal is reduced 50% or more.

11. Warped or distorted combustion chambers or furnace boiler firing doors which permit leakage of combustion products.
12. A listed appliance or appurtenance that is altered or modified.
13. Excessive scaling, corrosion, cracks in seams, tube, or shell of boilers.
14. Defective valves, gauges, or cocks of boilers.
15. Grooving or pitting of boilers.
16. Boilers with improperly installed or maladjusted controls and appurtenances.
17. Any unlisted appliance or appurtenance installed without approval of the *building official*.
18. Appliances not provided with required safety controls.

105.1.2.2 Electrical Systems. Electrical systems, appliances, devices, or apparatus which have any of the following defects:

1. Bare wiring.
2. Poor electrical connections.
3. Overloaded circuits, feeders, or services.
4. Equipment not properly grounded.
5. Disconnecting means not provided at the appliance.
6. Over-fused circuits.
7. Misuse of cord wiring.
8. Wiring not properly supported.
9. Non-approved wiring exposed to extreme heat, moisture, combustible dusts, gases, or other harmful vapors or liquids.

105.1.2.3 Refrigeration Systems. Refrigeration systems which have any of the following defects:

1. Inadequate ventilation.
2. Inadequate venting of pressure relief valves.
3. Unauthorized fuel-fired equipment located in the same room designated for the refrigeration equipment.
4. Improperly installed cooling towers by reason of location, type, fan, water condition, controls, roof, or floor overload.
5. Faulty controls.

105.1.2.4 Plumbing Systems. Plumbing systems or devices which have any of the following defects:

1. Supply water not meeting the standards of potability as required by the Colorado State Department of Public Health.

2. Water systems subjected to the hazards of backflow or back-siphonage, which might create pollution to the potable water supply, i.e., hose bibbs shall have anti-siphon devices.
3. Inadequate piping not supplying sufficient water to the various appliances.
4. Clogged sewers or drains.
5. Inadequate or missing trap seals.
6. Inadequate venting.
7. Leaking water, sewage or sewer gas within a building or structure.
8. Trenches or ditches not properly shored or cribbed.

105.2 Notice and Abatement. If, after inspection by the Agency, the building, structure, or equipment is determined to be unsafe by the *building official*, it shall be abated by repair, replacement, removal, or demolition upon notice by the *building official*. If the building or structure has common property line walls, then the *building official* may direct the owner to notify adjacent building owners that their building may be unsafe and may require repair or reinforcement.

105.2.1 Buildings or Structures. In the case of an unsafe building or structure, the *building official* may order such building or structure, or any buildings or structures placed in jeopardy by the unsafe building or structure, vacated immediately. When necessary to protect life, property, health, and public welfare, the *building official* may cause to have posted signs which shall prohibit entry into an unsafe building or structure. However, with written permission of the *building official*, it shall be lawful to enter the unsafe building or structure for the purpose of effecting any required repairs, rehabilitation, or demolition, or by members of the Fire Department. Signage shall be provided by and attached to the building or structure by the Agency and shall read, in addition to other information, "UNSAFE DO NOT ENTER". See Section 107 for Prohibitions and Violations.

105.2.2 Equipment. In the case of unsafe equipment, the *building official* shall affix a warning tag or sign on or immediately adjacent to the unit declared to be unsafe. The *building official* shall order the unsafe equipment disconnected, or its use discontinued until the unsafe condition is abated. In addition, the *building official* may order any building, structure, or equipment which is placed in jeopardy by the unsafe equipment to be vacated and/or disconnected, and these shall not be reoccupied or reconnected until the unsafe declaration is lifted by the *building official*. It shall be unlawful for anyone to mark any unsafe equipment, as herein defined, with any type markings, signage, or tags declaring them to be unsafe, except as authorized by the *building official*.

105.3 Demolition or Securing by the City. If the owner and/or occupant of an unsafe building, structure, or equipment fails to perform the repairs, rehabilitation, securing, or removal required by an order within the time specified therein or any extension of time to comply with said order, the *building official* may, as set forth in this Section, cause the demolition or securing of the unsafe building or structure at the owner's expense.

105.3.1 Procedure for Demolition or Securing by City. Upon the failure of the owner or legally responsible person of a building or structure to make any building or structure safe after the issuance of an order, the *building official*:

1. May obtain competitive bids for the securing or demolition of the building or structure.

2. May, upon receipt of bids, issue a notice of intent to raze or secure the building or structure which shall include the estimated cost of demolition or securing plus a fee not to exceed 25% of the cost of demolition or securing, with a minimum of $500 to cover administrative and other costs. Such notice shall be served personally or by registered or certified mail, return receipt requested, upon the owners or entities of all recorded interests in the property at least 10 calendar days prior to the demolition or securing.

3. If service cannot be obtained upon any party with record interests as provided in subsection 105.3.1.2, may post the notice upon the property for 10 calendar days and mail notices to the last known address of each party having a record interest.

4. Ten calendar days after completion of service under subsections 105.3.1.2 or 105.3.1.3 above, may proceed with demolition or securing.

5. Upon completion of the demolition or securing, the Agency shall pay the cost and expense of demolition, removal, securing and/or barricading, from any appropriation made available for that purpose, and shall mail a notice of the final cost of demolition or securing and of the intent to file a lien against the property to owners of a recorded interest in the property.

105.3.2 City's Lien. In the event the owner fails to pay the costs as set forth in the notice sent under this Section within 15 business days of such notice, the amount shall constitute a lien against the real property upon which the building or structure was or is situated. The Agency shall thereafter certify a statement thereof to the Manager of Finance, who shall assess and charge the same against the property involved and collect the same due, together with interest at the rate established by the law for delinquent real property taxes. The lien created thereby shall be superior and prior to other liens, regardless of date, except liens for general and specific taxes. For purposes of this Code, cost and expense shall include the abatement, demolition, removal, securing, barricading and administrative costs incurred therewith.

105.4 Emergency Demolition or Securing. In the event an emergency should occur wherein the continued use or existence of a building, structure, or equipment may constitute an immediate hazard to life, health, property, or public welfare as determined by the *building official* or *fire code official*, the *building official* may order and/or cause the building, structure, or equipment to be demolished, removed, disconnected, secured, or barricaded immediately and without notice by any means available to the Agency. When feasible, the *building official* shall attempt to give notice, by any means, to the owner of the building, structure, or equipment prior to taking any action. Cost and expense of demolition, removal, securing or barricading, if borne by the City, shall be recovered as provided for in Section 105.

105.5 Emergency Barricades. If any building, structure, or equipment is declared a hazard to life or safety of persons using a public way, the public way shall be provided with barricades to prevent public use. The barricades shall be erected on order from the *building official* or *fire code official*. Recovery of cost and expense, if borne by the City, shall be made as provided for in Section 105.

SECTION 106 RESERVED

SECTION 107
VIOLATIONS, PENALTIES AND REMEDIES

107.1 Violations. It shall be unlawful for any person, firm, or corporation to erect, construct, enlarge, reconstruct, alter, repair, move, improve, remove, convert, demolish, equip, occupy, inspect, or maintain any building, structure, or equipment, or cause or permit the same to be done, in the City and County of Denver, contrary to or in violation of any of the provisions of this Code, any other code, ordinance, or rule and regulation promulgated thereunder which is enforced and administered by the Agency.

107.2 Notice of Violation Order to Comply. If the *building official* determines that a violation exists under Section 107.1, the *building official* may issue a Notice of Violation (notice) or Order to Comply (order) upon the owner of the property upon which work was or is being performed or where the condition exists; or any person engaged in the work, causing the work to be performed or having a permit to perform the work. The notice or order must state the standards or requirements violated, must state what corrective action, if any, is necessary to comply with the standards or requirements, and must set a reasonable time for compliance.

> **107.2.1 Service of notice or order.** Service of any notice of violation or order shall be by personal service or first-class mail addressed to the last known address of the owner of the property, or if no address is available after reasonable inquiry, the order may be posted in a conspicuous place on the property. The notice or order may also be posted if served by personal service or first-class mail. The notice or order shall be deemed served on the date of receipt by the person personally served or upon the date of mailing or posting.

107.3 Penalties. Whenever, in any Section of this Code, or any Section of a rule or regulation promulgated thereunder, the performance of any act is required, prohibited, or declared to be unlawful, and no definite fine or penalty is provided for a violation thereof, any person convicted of a violation of any Section shall, for each offense, be fined, imprisoned, or both fined and imprisoned within the limits established by Section 1-13 of the Denver Revised Municipal Code. A separate violation shall be deemed committed upon each calendar day during or on which a violation occurs or continues. The suspension or revocation of any license, certificate, permit, or other privileges conferred by the City shall not be regarded as a penalty for the purpose of this Code.

107.4 Remedies. In the event any building, structure, or equipment is erected, constructed, enlarged, reconstructed, altered, repaired, moved, improved, removed, converted, demolished, equipped, occupied, inspected, or maintained in violation of this Code, the City or any proper person may institute an appropriate action or proceedings to prevent the unlawful erection, construction, enlargement, reconstruction, alteration, repair, move, improvement, removal, conversion, demolition, equipping, occupying, inspecting, or maintenance, and to restrain, correct or abate such violation, or to prevent the occupancy of said building, structure, or land. The imposition of any penalty thereunder shall not preclude the City or any proper person from instituting any appropriate action or proceeding to require compliance with the provisions of this Code, and with administrative orders and determination made thereunder.

> **107.4.1 Recording of Notice or Order with Clerk**. When the *building official* determines that a violation of this Code is consistent with Agency policies and warrants recording based on the nature of or circumstances concerning the violation, the *building official* may cause to be recorded any notice or order based on the violation in the real property records of the Clerk and Recorder. When the condition upon which the notice or order was based has been corrected, the *building official* shall record a release of the notice or order.

SECTION 108
BOARD OF APPEALS

108.1 Creation. There is hereby created a Board of Appeals (the "Board"), which shall consist of six members and three alternates appointed by the mayor. The Board shall be comprised of the following persons:

1. One professional engineer registered in the State of Colorado.
2. One architect licensed in the State of Colorado.
3. One person who is the holder of a City Building Contractor Class A, B or C license.
4. One preservationist with expertise in preservation of historic buildings and structures.
5. Two citizen members who are not associated with the building industry.

Two alternates shall be a professional engineer registered in Colorado and an architect licensed in Colorado, respectively. A third alternate shall be a citizen not associated with the building industry. Alternates may appear at all meetings and shall be allowed to vote even if not filling a temporary vacancy.

108.2 Secretary. There shall be a Secretary of the Board, furnished by the Agency. The Secretary shall be the custodian of the records, shall conduct official correspondence of the Board, and generally be responsible for clerical work of the Board. The Secretary shall be present at all meetings and shall present all relevant information regarding appeals to the Board, including the application and other information submitted by the Applicant prior to the hearing. The Secretary shall notify all interested parties regarding matters of the Board.

108.3 Fire Department Representative. The Chief of the Fire Prevention Division, or his authorized representative, shall be an ex-officio member to the Board without voting power. Terms of office and remuneration shall not be applicable to this member.

108.4 Terms. As of the effective date of the council bill adopting the 2022 Denver Building Code, the members of the Board of Appeals as constituted under this Code shall continue to serve for the unexpired portion of their terms. The mayor shall appoint Board members and alternates as necessary to fill expiring terms and such terms shall be for 3 calendar years. No member of the Board shall serve more than 3 consecutive full terms or a total of more than 9 consecutive calendar years. Any vacancy that occurs in the Board shall be filled by the mayor for the unexpired term of that Board member. Board members may be removed only for cause upon written charges.

108.5 Procedures – Meetings – Quorum.

108.5.1 Appeal. Any person or city agency aggrieved by a decision of the *building official* may, within 30 calendar days of the first or initial date of notice of such decision or order, appeal the decision or order by filing an application for appeal with the Board.

> **Exception.** Appeals of notices issued under Section 105.5, where such notice is personally served or delivered by overnight mail, shall be made within 10 calendar days of the delivery of such notice or the refusal to accept such notice.

108.5.2 Method of Application and Fee. Prior to action by the Board, an application shall be filed with the Agency on a form providing the necessary information required by the Board. An appeal shall not be considered unless filed with the Agency at least 15 calendar days prior to the meeting. Upon filing the

application, a fee set by the *building official* shall be paid to the City. All checks shall be made payable to the Manager of Finance and shall be paid in the office of the Agency. This fee is not refundable. A validly filed appeal shall be heard by the Board at the next available meeting time when a quorum is present.

108.5.3 Regular Meetings. Regular meetings shall be held annually or as often as may be required by the Agency. Four members of the Board shall constitute a quorum at regular meetings.

108.5.4 Special Meetings. Special meetings may be held at the call of the Chairman and at such times as the Board shall determine. The Board, the *building official*, or an appellant may request a special meeting. Any special meeting held at the request of an appellant shall be paid for by the appellant in an amount set forth by the *building official*. Four members of the Board shall constitute a quorum at special meetings.

108.5.5 Business Meetings. Business meetings of the Board may be called by the Chairman of the Board.

108.5.6 Imminent Hazard. In any matter in which an order or notice relating to an unsafe building or structure is appealed, the *building official* may certify to the Board that the building or structure could become an imminent hazard, in which case the Board shall schedule a meeting within three business days to hear said appeal.

108.5.7 Notice. Public notice shall be given of all meetings and all meetings shall be open to the public except executive sessions or business meetings. Due notice of all meetings shall be given by the Secretary to all parties in interest, including the Agency. The Agency shall be permitted to intervene, for and on behalf of the City, in all public meetings.

108.5.8 Oath/Subpoena. The Chairman may administer oaths, accept affirmations, and compel the attendance of witnesses. A failure or refusal to appear in response to a subpoena issued by the Board shall constitute a violation of this Code.

108.5.9 Agency/Interested Party. At any public meeting a representative of the Agency, Fire Department and any other interested party may appear in person, by agent or by attorney, offer evidence and testimony, and cross-examine witnesses. All evidence and testimony shall be presented publicly. The Board may take judicial notice of facts to the same extent and in the same manner as courts of record and may consider relevant facts within the personal knowledge of any member of the Board that are stated into the record by such member.

108.5.10 Recording. All meetings before the Board shall be recorded either by electronic means or by a Certified Court Reporter.

108.6 Powers and Duties of the Board.

108.6.1 Rules and Procedures. The Board shall adopt Rules and Procedures governing all proceedings before it consistent with the provisions set forth herein. The rules and regulations shall include proper procedures for applying to the Board, contents of the application and time allotted for each case.

108.6.2 Powers. Subject to the limitations enumerated herein, the Board shall have and may exercise the following powers with respect to this Code:

1. **Administrative Review.** To hear and decide appeals where it is alleged there is error in any order, or decision made by the *building official* in the enforcement of this Code.

2. **Alternate Methods and Materials.** To hear and decide appeals from the *building official* denial of an application for alternate materials and methods of construction and equipment under Section 104 herein, only after the applicant has obtained an approval or certified test results from an *approved*

testing agency. All relevant information and documentation shall be submitted to the Board prior to the hearing. The decision of the *building official* shall not be overturned unless the Board shall find that all the following conditions exist:

1. That the applicant properly applied under the terms of Section 104.
2. That the proposed design is satisfactory and that the alternate is, for the purpose intended, the equivalent of that prescribed in this Code.
3. That the proposed alternate will not weaken the general purposes of this Code.
4. That the proposed alternate will be in harmony with the spirit and intent of this Code.
5. That the proposed alternate will not adversely affect the public health and safety.
6. That the proposed alternate will not adversely affect the structural integrity of the building.
7. That the proposed alternate will not adversely affect the fire or life safety of the building.

3. **Stay of Enforcement.** The Board shall have the power to stay the enforcement of any order issued by the *building official* unless the *building official* certifies that, based on facts stated in the request, a stay of the order would cause imminent peril to life or property. A stay shall not constitute a variance, and shall be personal to the applicant, not transferable, and subject to the terms and conditions imposed by the Board.

4. **Unsafe Condition.** Whenever the owner, or legally responsible person, of a building, structure, equipment, or other condition determined to be unsafe by the *building official* does not agree with the terms of the issued order for abatement, the owner shall have the right to appeal to the Board within 30 calendar days from the date of said order. In the appeal, the owner shall state how the owner proposes to make the building, structure, equipment, or other condition safe and, if required by the Board, the owner shall submit detailed engineering analysis or recommendations, accompanied by plans and specifications prepared by a Colorado licensed Architect or Colorado registered Professional Engineer, as prescribed in this Code. The Board may require substantiating data concerning the removal or other remedial steps to be taken to render the building, structure, equipment, or other condition safe.

108.6.3. Decision of the Board. In the exercise of the powers described above, the Board may reverse or affirm a decision, reverse, affirm or modify an order, impose conditions or requirements, as deemed necessary; or hold cases in abeyance until proper information needed by the Board is supplied. Decisions shall be filed with the Agency as a matter of public record.

The concurring vote of a majority of those present and voting shall be necessary to decide any matter upon which the Board is required to pass under this section of this Code. The Board shall issue a written decision, based on evidence presented at the public meeting, setting forth the necessary findings of fact and the final decision of the Board. A copy of this decision shall be mailed by the Secretary to all interested parties who received notice under this Section, including the *building official*. The Board may order that a copy of the decision be recorded in the office of the Denver Clerk and Recorder.

108.7 Limitations of Powers. The Board of Appeals shall have no authority to review administrative decisions to the requirements of Chapter 1 of this Code except where specifically allowed herein.

Any determination or order of the *building official* shall be presumed to be correct until evidence is introduced that would support a contrary determination.

108.8 Compensation. Each member of the Board shall receive compensation, as set forth by the *building official*, for each meeting attended regardless of number or type of cases heard.

108.9 Appeals from decisions of the Board

108.10 Procedure. Any person subject to a decision of the Board may have that decision reviewed in the manner provided by the Colorado Rules of Civil Procedure. The Board shall not be required to return the original papers acted upon by it but may return copies thereof. The returned copies shall concisely set forth other pertinent facts and material to the decision appealed and shall be verified.

108.11 Effect of Appeal. The issuance of a writ on a petition hereunder shall not stay proceedings upon the decision appealed; but the court, on application after notice to the Board and on due cause shown, may grant a restraining order.

SECTIONS 109 THROUGH 119 ARE RESERVED.

SECTION 120
LICENSING, CERTIFICATION, REGISTRATION

This Chapter provides for the licensing of contractors, the certification of supervisory personnel, and requirements for licensure, certification, and registration. Fire Department requirements for licensure are enumerated in Chapter 1 of the *Denver Fire Code*. There shall be various classes of certificates, licenses, and both plumbing and electrical registrations, with qualifications as set forth by the *building official* per policy, and the holder thereof shall be authorized to perform work as set forth by this Code and the *building official*.

SECTION 121
CONTRACTOR LICENSING OR REGISTRATION

121.1 Definitions.

1. *Contractor* means any person, firm, partnership, corporation, association, or other organization or any combination thereof who erects, constructs, enlarges, reconstructs, alters, repairs, moves, improves, removes, converts, demolishes, or equips any building, structure, or equipment as an occupation and as authorized by a license or registration. A contractor must have a certified supervisor or registrant as an employee or principal. All licenses or registrations shall be issued in the name of the contractor. If the contractor is an individual, then the individual may also qualify as the certified supervisor after examination.

2. *Certified Supervisor* means an individual who meets all the following:

   A. Passes the test required by the *building official* evidencing the certified supervisor's satisfactory knowledge of the applicable code or codes.

   B. Takes an active role in supervising and reviewing all work performed and materials used by the contractor in the process of construction.

   C. Acts as the agent for the contractor and is responsible for all actions in connection with the license and all permits obtained under the license.

D. Is employed by only one contractor at any given time.

E. Is the principal contact between the contractor and the Agency for code compliance, inspection requests, license renewal, and other obligations imposed by the Code.

3. *Registrant* means a master plumber or master electrician licensed in the State of Colorado and registered with the Agency.

121.2 Licenses or Registration Required. Licenses shall be required for any work requiring a permit. Electrical and plumbing contractors must register with the Agency.

Exceptions:

1. Public utility companies will not be required to obtain licenses when engaged in the installation, operation and maintenance of their equipment used for the production, generation, or distribution of the utility, product, or service through the facilities owned or operated by the utility company to the point of customer service.

2. Work performed by an owner and occupant of a single unit dwelling and when work is performed under a permit authorized by Section 131.4.

121.3 Application. Every applicant for a license or registration shall fill out a form provided by the Agency. The name of the certified supervisor or registrant shall appear on the license or registration application. The applicant shall be notified of the action taken on the license or registration application by the Agency. If the application is *approved*, the applicant shall procure the license or registration within 90 days of notification. Failure of the applicant to procure the license or registration shall require the filing of a new application. If the application for license is denied by the *building official*, the applicant may appeal to the Board of Appeals in the manner provided for in this Code.

121.4
RESERVED

121.5 Contractor licensing requirements for access control system work. A licensed *access control system contractor* is required to obtain the permit necessary to install *access control systems* and components, including but not limited to: delayed egress systems, telephone entry systems, electric door strikes, electromagnetic locking hardware, electrified locksets, electrically operated panic hardware, card readers, controllers, and other access control equipment. The *access control system contractor* may perform all work related to the installation of the *access control system*.

121.5.1 Access control system contractor license. The *access control system contractor* license is authorized and classified by the provisions of the *Code*. All applicable requirements of the Administration Section shall be satisfied in order to obtain the *access control system contractor* license. The access control contractor may perform all work directly related to the *access control system* except as limited by Section 121.5.2. The access control contractor may perform the following types of related work:

1. The installation of all *access control system* components including but not limited to: control panels, electromagnetic locking hardware, electrified locksets, *electric strikes*, electrically operated panic hardware, card readers and power supplies that are not hardwired to the building's electrical power distribution system.

2. The installation of all associated interconnecting wiring between *access control system* components necessary for operation of the system except electrical circuits that are powered with more than 48-Volt-AC/DC.

3. The installation of raceways and conduits that only contain wiring for the interconnection of the various access control components.

4. The modification of doors and door frames required to install the various access control components if the modification does not void the *listing* and *labeling* of a fire rated door and/or door frame and the work necessary for the replacement of existing doors and/or door frames in existing openings.

An *electrical contractor* or an *electrical signal contractor* shall not perform the work that requires an *access control system contractor* unless allowed by other provisions of this Code. The modification of doors and door frames may be performed by a properly licensed building contractor (Class A or B) or by one of the Class D building specialty contractors licensed to install or perform work on doors.

121.5.2 Requirements for work not performed by an access control systems contractor. The work related to the installation of the *access control system* listed below shall not be performed by the *access control system contractor.* Said work shall be performed by a contractor that is licensed by the classification provisions of the Code to perform the work as described in this Section:

1. The wiring and modifications necessary to connect the *access control systems* to the fire alarm system shall be performed by an *electrical signal contractor* or an electrical registration contractor.

2. The wiring and modifications necessary to connect the *access control system* to elevator control system shall be performed by a licensed elevator contractor.

3. Any work on electrical circuits that are powered by more than 48 Volt-AC/DC, including the hard-wiring of power supplies for the *access control system* to the building's power system, shall be performed by an electrical registration contractor.

4. The installation of conduits or raceways that are intended to contain wiring for any of the following types of circuits:

    A. Circuits that carry more than 48 Volt-AC/DC shall be performed by an electrical registration contractor.
    B. Circuits that are a part of the building's fire alarm system shall be performed by an *electrical signal contractor* or an electrical registration contractor.
    C. Circuits that are a part of an elevator control system shall be performed by an elevator contractor.

5. The construction of new walls and the installation of new doors and/or door frames in new openings shall be performed by a Class A or Class B building contractor or by one of the Class D building specialty contractors licensed to perform the work.

6. The work necessary to modify fire rated doors and door frames is required to be performed by the doors' manufacture or other *approved* door fabrication shop *approved* by the agency that provides the *listing* for the door and door frames.

SECTION 122
CERTIFIED SUPERVISOR CERTIFICATES

122.1 Certificate Application. Every applicant for a certified supervisor certificate shall be required to complete a form provided by the Agency.

122.2 Examinations. All applicants for a certificate shall pass a written examination with the exception of those who apply for a Construction D Supervisor Certificate. Such applicants shall be examined for experience and training by a standard procedure established by the *building official*. If an applicant who has successfully passed the examination given by the Agency fails to procure this certificate within 90 days of notification, the certificate shall be declared null and void and a new application shall be filed.

122.3 Reciprocal Certificate. certificates issued by other jurisdictions are not valid in the City, however the *building official* may accept the examination results of the issuing jurisdiction as equivalent when requested, as part of a completed application with supporting documents, and required application fees.

122.4 Requirements. A license shall be valid only as long as the named supervisor remains in the employ of the licensed contractor in an active, full-time capacity. "Active, full-time capacity" means that the supervisor shall be available, virtually, by phone, at the local office of the contractor, at home, or at the job site within a reasonable period of time. If the certified supervisor should leave the employ of the licensed contractor, the licensed contractor shall notify the *building official* within 3 working days after the termination. Failure of the licensed contractor to notify the *building official* shall be cause for suspension or revocation of the license. The licensed contractor shall be required to obtain a certified supervisor within 30 working days after the date the supervisor leaves the employ of the licensed contractor. If a supervisor is not obtained within the 30-working-day period, the license shall be deemed suspended until a certified supervisor is obtained and the *building official* is notified. Licensed contractors may employ multiple certified supervisors in order to meet the city's requirement that a supervisor of record perform on site supervision of all work performed. General supervision over all trades must be performed only by certified supervisors certificate holders who have agreed to work as supervisors of record on the specific license for all permitted work under the Code. The Certificate is personal to that certified supervisor and shall not be construed to be a license.

SECTION 123 RESERVED

SECTION 124
EXAMINATION STANDARDS AND REVIEW

124.1 Examination Standards. The *building official* shall establish minimum standards for the education and experience and develop standards for the examination of applicants for certificates. The standards shall be consistent with the purpose of this Code, which is to provide for the public health, safety, and welfare to the extent that those persons examined are to be found qualified in terms of their skills, Code knowledge, practical experience, and knowledge of pertinent laws to perform the construction work for which they may be certified. The Agency shall examine applicants in the areas of this Code applicable to the type of license, certificate, technical knowledge, and specific skills.

124.2 Standards Review. The standards shall be reviewed by the *building official* as required to maintain currency with changes in the Code and building construction practices.

SECTION 125
RENEWAL, REISSUANCE, CHANGES AND FEES

125.1 Renewal and Expiration. Licenses, registrations, and certificates shall be renewed every 3 years and expire on the date specified on the certificate. However, plumbing registrations shall be renewed every 2 years. No work shall commence or continue after the date of expiration.

125.2 Reissuance.

125.2.1 Licenses. The *building official* may reissue an expired license or registration without the filing of a new application, provided that the reissuance is accomplished within one year after the license has expired.

125.2.2 Certificates The *building official* may renew an expired certificate, provided that the renewal is accomplished within the limits set forth herein.

1. The certificate may be reissued without submission of a new application, provided that such reissuance is accomplished within one year of expiration of the original certificate.
2. If the certificate holder reapplies within 3 years of the date of expiration of the original certificate, a new certificate examination shall not be required.
3. If the certificate holder applies more than 3 years after expiration, a new certificate application and examination shall be required.

125.3 Changes.

125.3.1 Change of Name. The change of name by a licensed or registered contractor shall be reported to the Agency within 15 days after making the change, on a license or registration application provided by the Agency. An application fee as established by the *building official* shall be required.

125.3.2 Change of Address. A change of address of a licensed or registered contractor shall be reported to the Agency within 15 days after making the change.

125.3.3 New Licenses Required. A new license or registration shall be obtained within 30 days after the creation of a new legal entity, even if one or more of the members, officers or directors have a license or are registered, on a license application provided by the Agency.

125.3.4 Dissolution. The dissolution of a firm, partnership, corporation, association, or other organization, which has been licensed or registered, terminates the license or registration and no person may operate under that license or registration.

125.4 Fees. Licenses, Registrations, and Supervisor Certificates fees shall be set forth by the *building official* and paid every 3 years to the Agency.

Exception:

The certificate fees for employees of the City shall be waived when performing work for the City or when employed by the Agency.

125.4.1 Fee Refund. Licenses and Certificate fees shall not be refundable.

SECTION 126
LICENSED CONTRACTOR, REGISTRANT AND CERTIFICATE HOLDER RESPONSIBILITY

126.1 Licensed Contractor Responsibility. Licensed contractors shall be responsible for performing all work in conformity with the provisions of the Code, including, but not limited to, the following items:

1. To provide minimum safety measures and equipment to protect workmen and the public.
2. To employ a full-time qualified supervisor certified in accordance with the requirements of this Code.
3. To obtain a permit when required prior to commencing work.
4. To hire licensed subcontractors for those trades that require a City and County of Denver license.
5. To faithfully construct, without departure from drawings and specifications filed and *approved* by the Agency and permit issued for same, unless changes are *approved* by the Agency.
6. To complete all work authorized by the permit issued under the authority of this Code, unless acceptable cause is indicated to the *building official*.
7. To obtain inspection services where required by this Code.
8. To pay any fee assessed under authority of this Code.
9. To obey all orders or notices issued under the authority of this Code.
10. To provide toilet facilities prior to and during construction or demolition.
11. To maintain with the Agency a current mailing address. Any Order, Notice, Summons and Complaint or other Agency communication, whether delivered by personal service or by mail sent to that address, shall constitute service.

126.2 Registrant Responsibility. Registered electrical and plumbing contractors shall comply with all provisions of Section 126.1 above and in addition shall respectively comply with all provisions of the Colorado State Electrical Board and Colorado State Plumbing Board.

126.3 Certificate Holder Responsibility. All Certificate holders shall be responsible for performing all work in conformity with the provisions of the Code, including, but not limited to, the following items:

1. To have in possession at all times a Certificate.
2. Observe the safety requirements of this Code.
3. To present a Certificate when requested by the Agency within a reasonable amount of time.
4. To obtain a permit when required prior to commencing work.
5. To faithfully construct, without departure from drawings and specifications filed and *approved* by the Agency and permit issued for same, unless changes are *approved* by the Agency.
6. To report in writing to the *building official*, within 3 working days, any accident occurring on any construction which results damage to the building, structure or equipment, and any accident occurring during demolition.
7. To complete all work authorized by the permit issued under the authority of this Code unless acceptable cause is indicated to the *building official*.

8. To obtain inspection services where required by this Code.
9. To pay any fee assessed under the authority of this Code.
10. To obey all orders or notices issued under the authority of this Code.
11. To actively supervise and oversee all work performed by or for the licensee by whom he is employed.
12. To maintain with the Agency a current mailing address. Any Order, Notice, Summons and Complaint or other Agency communication, whether delivered by personal service or by certified, registered or first-class mail sent to that address, shall constitute service.
13. Out of state Certificate holders shall maintain a current local mailing address on file with the Agency and accept all mail so addressed for the duration of the job.
14. To notify the Agency within 3 days whenever he/she leaves the employ of licensee.

126.4 Demolition and Moving Liability Insurance. Any contractor demolishing or moving any building, structure, or equipment shall, by means of commercial insurance or self-insurance, procure and maintain insurance coverage to fulfill the insurance requirements set forth by policy. The required insurance coverages shall be kept in force at all times during demolition or moving operations. The insurance coverages set forth in the policy are the minimum requirements, and these requirements do not lessen or limit the liability of the contractor. The contractor shall maintain, as its own expense, any additional kinds or amounts of insurance that it may deem necessary to cover its liabilities. The contractor will submit evidence of required insurance coverage in the form of an ACORD certificate. The City's Risk Management Office may require additional proof of insurance, including but not limited to, policies and endorsements. Additional insurance coverage may be required by the Office of Risk Management for contractors utilizing explosives in their demolition operations.

SECTION 127
DENIAL, SUSPENSION OR REVOCATION OF LICENSE OR CERTIFICATE

127.1 Authority. The *building official* may deny, suspend, or revoke a license or supervisor certificate resulting from any of the following acts or omissions:

1. Subsequent discovery of facts that if known at the time of issuance or renewal of a license or certificate would have been grounds to deny the issuance or renewal of a license or certificate.
2. Negligence, incompetence, lack of knowledge, or disregard of this code and related laws and rules.
3. Failure to notify the *building official* in writing within a period of three (3) working days of any disassociation of the certified supervisor who enabled the licensee to qualify for the license.
4. Knowingly entering into a contract with a contractor for work to be performed for which a license is required with a person not duly licensed in the required classification.
5. Failure to comply with any of the licensee or certificate holder responsibilities as outlined in this Code.
6. Allowing one's license or certificate to be used by another person.
7. Acting as agent, partner, associate or in any capacity with persons to evade the provisions of this Code.
8. Creates, because of work performed, an unsafe condition as defined by this Code.

9. Intentionally or fraudulently misrepresents the condition of any structure or equipment, or the requirements of this Code.

10. Fraud, misrepresentation, or bribery in securing a sign-off of work or a temporary or permanent certificate of occupancy. Violates or disregards any of the provisions of this Code or fails to obey orders of the *Building Official*.

11. Threatens or assaults any representative of the Agency.

12. Receives a conviction or judgement by a court having competent jurisdiction for negligence, a felony, or civil or criminal fraud, constructive or actual related to the license or certificate holder's duties or work as regulated by the jurisdiction under this Code.

127.2 Procedure. When any of the acts or omissions enumerated herein is committed by a licensed contractor or certificate holder and the *building official* deems that the license or certificate shall be suspended or revoked, the action shall be as follows:

1. **Notification.** The Agency shall send written notice to the licensed contractor or certificate holder, by certified mail or by personal service, identifying the acts or omissions and indicating that the license or certificate will be suspended or revoked. The written notice shall advise the licensed contractor or certificate holder that a "Request for Hearing" may be initiated as outlined herein.

2. **Request for Hearing**. Upon receipt of the notice, the licensed contractor or certificate holder may request a hearing with the Executive Director of CPD to show cause why the license or certificate should not be suspended or revoked. This request shall be submitted in writing to the *building official* within 7 days of receipt of the notice.

3. **Time of Hearing**. If a hearing is requested by the licensed contractor or certificate holder, the *building official* shall notify the holder of the time, date and place of the hearing. Suspension or revocation of the license or certificate shall be stayed pending the hearing.

4. **Attendance**. The licensed contractor or certificate holder, the *building official* and other interested parties may be in attendance at the hearing. In the event the licensed contractor or certificate holder fails to appear, the license or certificate shall be suspended or revoked by the *building official*. Upon completion of the hearing, the Executive Director of CPD shall take under advisement all evidence available as a result of the Agency's investigation and all evidence presented at the hearing and shall give written notice of the findings and ruling to the license or certificate holder by certified mail or personal service. The Executive Director of CPD may appoint a hearing officer to conduct the hearing. Final decision shall be rendered by the Executive Director of CPD.

5. **Suspension or Revocation**. Unless the license or certificate is being suspended or revoked under the emergency provisions of this Section, the suspension or revocation shall take effect:

   A. Seven (7) days after receipt by the license or certificate holder of the initial notification, unless a hearing is requested.

   B. Upon the return by the U.S. Postal Service of the initial notification as undeliverable or refused at the address maintained by the license or certificate holder with the Agency.

   C. If a hearing has been requested, which resulted in the affirming of the *building official*'s decision to suspend or revoke the license or certificate, upon receipt by the Agency of the Executive Director's decision.

6. **Right to Appeal.** Any final decision by the Executive Director of CPD may be reviewed in the manner provided by the Colorado Rules of Civil Procedure.

127.3 Emergency Suspension or Revocation. If the *building official* finds that cause exists for emergency suspension or revocation of a license or certificate, and that continued work under the license or certificate could be hazardous to life or property, the *building official* may enter an order for the immediate suspension or revocation of the license or certificate, pending further investigation. The license or certificate holder may request a hearing, as outlined in this Section, and such hearing shall be granted within five (5) business days. The suspension or revocation is not stayed while the hearing is pending.

127.4 Term of Suspension or Revocation. The *building official* may suspend or revoke a license or certificate for up to three (3) years. A license or certificate revoked by the *building official* shall not be eligible for reapplication for a period of up to five (5) years.

SECTIONS 128 THROUGH 129 ARE RESERVED.

SECTION 130
PERMITS AND INSPECTIONS

130.1 Permits Required. No person, firm, partnership, corporation, association, or other organization or any combination thereof shall erect, construct, enlarge, remodel, alter, repair, move, improve, remove, convert, demolish or change the occupancy of any building, structure or equipment, or perform any other work regulated by this Code, or cause the same to be performed, in the City, without first having obtained a permit from the Agency for the specific work to be performed. This permit shall be displayed or available on the job site at all times. The issuance of a permit or the approval of drawings and specifications shall not be construed to be a permit for, nor an approval of, any violation or deviation from the provisions of this Code or other ordinances, laws, Rules, or Regulations. The Agency shall take any action it deems necessary to ensure that all work performed meets all requirements of this Code. For work performed on an emergency basis outside of normal business hours (8:00 AM – 5:00 PM, Monday - Friday, except city holidays), and to maintain an existing service or equipment when the maintenance is necessary to protect health, life or safety, the application for a permit shall be made within 3 normal working days after commencement of the emergency work. All emergency work is required to meet this Code and the Agency may require modifications to installed elements or systems accordingly.

130.2 Inspections Required. All work for which a permit is required shall be subject to inspection by the Agency and all such work shall remain accessible and exposed for inspection until *approved* by the Agency. In addition, certain types of construction shall have continuous inspection as specified in Section 141. Approval as a result of an inspection shall not be construed to be an approval of a violation of the provisions of this Code or of any other City ordinances. Inspections presuming to give authority to violate or cancel the provisions of this Code or of other ordinances shall not be valid. It shall be the duty of the permit applicant to cause the work to remain accessible and exposed for inspection. Neither the Agency nor the City shall be liable for expense entailed in the removal or replacement of any material required to allow inspection. A survey of the lot may be required by the Agency to verify that the structure is located in accordance with the *approved* plans.

130.3 Exempted Work. The following construction is exempt from the permit requirements of this Code (see Appendix S Section 1.4 *of the Denver Commercial Building Code* for airport requirements). Exemption from this Code shall not be deemed to grant authorization for any work to be done in any manner that violates

the provisions of this Code or any other laws or ordinances of the City. Wastewater Management, Zoning Administration, Department of Transportation and Infrastructure, and Fire Department permits may be required.

1. One-story, detached, non-conditioned accessory buildings or structures; used as tool and storage sheds, playhouses, and similar uses; no more than 200 square feet (18.58 m^2) of projected roof area, 8-ft (2438 mm) top plate height, or 14-ft (4267 mm) maximum height to any point. Heights shall be measured from lowest adjacent grade to the accessory structure. A maximum of two lights and two receptacles are permitted with a valid electrical permit.

2. Fences of any type not over 4 feet (1220 mm) high. Posthole-dug fences up to 8 feet (2440 mm) high, such as chain link, cedar pine, redwood, and wrought iron. However, any fence providing a barrier for a swimming pool or spa requires a permit.

   Exception:

   When the fence is for a structure that is a designated structure for preservation or is in a district designated for preservation pursuant to Chapter 30, Denver Revised Municipal Code, a building permit and approval from the local preservation authority shall be required.

3. Retaining walls, including fences or walls on top of retaining walls, not over 4 feet (1220 mm) in aggregate height measured from the bottom of the footing to the top of the wall or fence, unless supporting a surcharge or impounding Class I, II or III-A liquids. Permits shall be required through the Department of Transportation and Infrastructure for all retaining walls constructed in association with water detention or retention ponds.

   Exception:

   When the retaining wall is for a structure that is a designated structure for preservation or is in a district designated for preservation pursuant to Chapter 30, Denver Revised Municipal Code, a building permit and approval from the local preservation authority shall be required.

4. Oil derricks.

5. Nonfixed and movable fixtures, cases, racks, counters, and partitions not over 5 feet 9 inches (1750 mm) high.

6. Water tanks supported directly upon grade where the capacity does not exceed 5,000 gallons (18,930 L) and the ratio of height to diameter or width does not exceed 2 to 1.

7. Flatwork (hardscape) including sidewalks, ramps, and driveways less than 30 inches (760 mm) above grade, not over any basement or story below and not part of an accessible route.

8. Uncovered decks not exceeding 200 square feet (18.58 m^2) in area, that are not more than 30 inches (762 mm) above grade at any point, and are regulated by the *Denver Residential Code*.

9. Painting, papering, tiling, floor coverings, countertops, carpeting, cabinets, curtains, drapes, and similar decoration items except those items regulated by Chapter 8 of the *Denver Commercial Building Code*.

10. Gypsum board (drywall) that is not part of a fire resistive rated assembly and if repairing or replacing not more than 32 square feet.

11. Temporary motion picture, television and theater stage sets or scenery.

12. Window awnings supported by an exterior wall of one- and two-family dwellings, townhouse units, Group R-3 and Group U Occupancies when projecting not more than 54 inches (1370 mm) over privately owned property and do not require additional support.

13. Prefabricated swimming pools accessory to one- and two-family dwellings, townhouse units, and Group R-3 Occupancies that are less than 24 inches (610 mm) deep, are not greater than 5,000 gallons (18 925 L) and are installed entirely above ground.

14. Public utility: Construction, repair, or maintenance of public utility equipment and facilities used in the storage or distribution of their utility. This exemption includes buildings whose primary function is to house utility distribution or signal control equipment and not intended for human occupancy. Buildings or structures enclosing energy storage systems (batteries) are not exempt from a permit.

15. RTD Light and Commuter Rail construction on RTD right-of-way. Refer to Section 103.9.

16. State and federal governments, their agencies or subdivisions, or contractors constructing improvements for said State and federal governments, their agencies, or subdivisions, when constructing improvements to be used by, and maintained entirely and strictly for the operation of said governments.

17. Replacement of glass not in hazardous locations (see Section 2406.4 of the *Denver Commercial Building Code*).

18. Site development work including grading, water detention/retention ponds and soil erosion control. The Department of Transportation and Infrastructure will require permits for this type of work.

19. Denver Public Schools (D.P.S.): Construction, remodeling, or repair of any plumbing or electrical system, except for fire alarm and detection systems, in any portion of a building in which instruction is or will be given by any D.P.S. school as long as such work is permitted and inspected by the State Examining Board of Plumbers or the State Electrical Board.

20. Tents, 200 sq. ft. or less and freestanding canopies with a covering of fabric or pliable material 400 sq. ft. (37 m^2) or less, open on 3 or more sides.

21. Membrane structures, including tents and canopies of any size, erected for a period of less than 180 days. The Fire Department will require permits for this type of work.

22. Illuminated and non-illuminated signs of the following types do not require a construction permit. Illuminated signs require an electrical permit.

    a. Cloth signs mounted directly on a wall.

    b. Wall signs not exceeding 200 sq. ft. (19 m^2) in area.

    c. Ground signs not exceeding 150 sq. ft. (14 m^2) in area, or not exceeding 6 feet in height to the top of the sign.

    d. Projecting signs not exceeding 2.5 sq. ft. (0.23 m^2).

23. Replacement of awning fabrics.

24. Replacement of windows and doors with no structural alterations and no change in size of opening in one- and two-family dwellings and townhouse units.

Exception: When structure is a designated structure for preservation or is in a district designated for preservation pursuant to Chapter 30, Denver Revised Municipal Code, a building permit and approval from the local preservation authority shall be required.

25. Swings, playsets, slides, treehouses, and other playground equipment intended for children's use whether premanufactured or custom-built.

26. Temporary structures or temporarily-placed relocatable buildings for use by licensed contractors at the construction or demolition site. An electrical permit is required unless otherwise exempted by Section 130.3.2.

27. Construction trailers used exclusively by the contractor for the purpose of managing projects that are not open to the general public and that are completely within the property lines of the project. An electrical permit is required.

28. Excavations that are exempt from excavation, shoring, sloping, or benching permits as clarified through building code policy.

130.3.1 Mechanical. No mechanical permit shall be required for bath fan installation in existing one- and two-family dwellings and townhouse units, however, electrical and construction permits shall be required. No mechanical permit shall be required for all general repairs and replacements of like units unless the work involves disconnection and reconnection of any of the following:

1. Natural gas line (except replacement of gas valve with like unit).

2. Flue vent from fuel-fired appliance.

3. Refrigerant line.

4. Steam line or hot water line.

5. Safety controls on high pressure boilers.

130.3.2 Electrical. No electrical permit shall be required for work that is exempt from permit requirements in the current National Electrical Code, as adopted by the State of Colorado, or for work that is exempt from permit requirements under the provisions of Title 12, Article 23, Section 111, Colorado Revised Statutes, as amended.

130.3.3 Plumbing. No plumbing permit shall be required for:

1. General repairs in one- and two-family dwellings and townhouse units that do not alter existing systems, including replacement of like units such as bathroom/kitchen sinks, garbage disposals and water closets.

2. Replacement of sinks, garbage disposals and water closets with like units; faucet and trap replacement or repair in commercial buildings. Permit shall be required for all other plumbing work in commercial buildings.

SECTION 131
PERMIT APPLICATION AND ISSUANCE

131.1 Application. The owner or the owner's agent shall apply for a permit on forms furnished by the Agency. The applicant should exercise care in completing the necessary information, especially addresses, as permits are nontransferable, unless the address change is approved by the *building official*.

Exception: The Agency may correct minor errors in the address if the change can be made on all copies of the permit and initialed by the inspector.

131.2 Expiration of Application. If no permit is issued within 180 days following the most recent Agency review on the submittal, the application shall expire, and plans and other data submitted for review may thereafter be disposed of by the *Agency*. The *building official* may extend the time for action by the applicant for a period not exceeding 180 days upon approval of written request showing that circumstances beyond the applicant's control have prevented action from being taken. An additional extension of 60 days may be granted by the *building official* upon written request due to extenuating circumstances beyond the applicant's control and not previously relevant to the timeline of the project. Furthermore, the application shall expire if the plan review fee is not paid within 45 days of the Agency notifying the applicant that the fee is ready to pay. To renew action on an application after expiration, the applicant shall submit a new application with the design plans complying with the Code in effect at the time of the new application and pay a new plan review fee.

131.3 Issuance of Permits. The Agency shall issue permits to perform *approved* work shown on submitted documents and as specified on the permit, when all phases of the project conform to the requirements of this Code and those of the Department of Transportation and Infrastructure, Zoning Administration, Denver Department of Public Health and Environment, Denver Water, Denver International Airport, the Denver Fire Department, applicable Section 138 fees associated with the permit have been paid, and the permit is issued, as appropriate, to:

1. A contractor licensed or registered under Section 121.
2. A homeowner(s) or legally authorized agent applying for a permit under Subsection 131.4.
3. The owner or owner's agent of a Group R-1, R-2, R-3, or R-4 occupancy building installing battery-operated smoke detectors.
4. An owner or owner's agent to establish a new Certificate of Occupancy when no construction work is to be done.

131.3.1 Amended construction documents. Work shall be installed in accordance with the approved construction documents, and any changes made during construction that are not in compliance with the approved construction documents shall be resubmitted for approval as an amended set of construction documents and based on the Code in effect at the time of original construction drawing application submittal to the Agency.

131.4 Homeowner (owner-occupier) permits.

131.4.1 Definitions:

DESIGNATED WORKER. The individual who will be assisting the owner-occupier with the owner-occupier permitted work and may assist the owner-occupier with the owner-occupier exams required by item #1 of Section 131.4.2. This individual cannot accept payment from the owner-occupier for services rendered without written request and approval from the *building official*. The individual who will be assisting the owner-occupier must be identified on the owner-occupier permit.

OWNER-OCCUPIER. The natural person listed in the Assessor's records who owns and occupies a single-unit dwelling, or who owns and occupies such single-unit dwelling they wish to construct.

SINGLE-UNIT DWELLING. The primary (stand-alone) structure, housing a single dwelling unit which is the domicile for the owner-occupier. Duplexes, townhouse units, condominiums, apartments, and

commercial buildings are not single-unit dwellings. Note: For the purposes of this section, accessory dwelling units are not considered single-unit dwellings.

131.4.2 Permits. Permits may be issued to the owner-occupier of a single-unit dwelling in the following circumstances:

1. The owner-occupier must be the individual seeking the permit and submitting to take the exam. An individual who has been granted Power of Attorney by the natural person who owns and occupies the single-unit dwelling may apply for a permit in the owner-occupier's name, by providing the original, City Clerk recorded Power of Attorney to the permitting staff. However, this individual who has been granted Power of Attorney may not assist with the exam or perform the work unless they are the designated worker.

2. The owner-occupier of an existing single-unit dwelling may be issued permits and conduct work on their own single-unit dwelling and accessory structures, but excluding accessory dwelling units and excavations and shoring more than 4-feet in depth, after passing discipline-specific exams.

3. The owner-occupier of an existing single-unit dwelling may be issued permits and conduct all work in the construction of new accessory structures (including detached garages but excluding accessory dwelling units) after passing all applicable discipline specific exams. Such permits shall only be issued to a person previously named on a permit as an owner-occupier once in any five (5) year period.

4. The owner-occupier, who intends to construct a new single-unit dwelling, may be issued permits and conduct work on their new dwelling after passing all applicable discipline-specific exams. Such permits shall only be issued to a person previously named on a permit as an owner-occupier once in any five (5) year period. Excavation and shoring more than 4-feet in depth shall be conducted by an appropriately licensed contractor.

5. The owner-occupier must perform the work for which he/she has obtained the permit. In performing the work authorized by the owner-occupier permit, the owner-occupier may utilize the assistance of the designated worker.

When the owner-occupier wants to act in the capacity of general contractor, he/she must request written approval from the *building official*. Such request must include the name(s) of the property owners, the property address, and a statement that they will hire licensed (in the City and County of Denver) contractors to perform any work that they are not doing themselves.

6. To take the owner-occupier exam for the work to be performed, the owner-occupier must provide a current Colorado Photo ID or Driver's License. The name on the ID must match the name listed on the Assessor's property record to verify property ownership. To assist with the test, the designated worker must supply a current Colorado Photo ID or Driver's License. A Colorado temporary Driver's License, other State-Issued Photo ID or Driver's License, Passport, or Federal Issued Permanent Resident Card ("Green Card") may also be accepted with the *building official*'s approval.

7. The owner-occupier must sign a Notice of Requirements for Owner- Occupier Permits.

8. In order to be issued permits, the owner-occupier must show a valid Colorado driver's license or photo I.D. that matches the property owner name listed in the Denver Assessor's records.

Exceptions:

1. The applicant for a homeowner's permit to perform electrical, heating, cooling or plumbing work shall pass an examination related to the work being performed and shall personally perform the work, unless *approved* by the *building official*. Upon verification of their State issued electrical or plumbing license, the applicant will not be required to take the homeowner's examination. A helper may assist the homeowner in taking the examination and performing the work with the approval of the *building official*. The helper may not repeatedly act in this capacity for other homeowner's permits.

2. A permit for minor work involving the volunteer services of persons working through a recognized volunteer organization, or of other qualified individuals, may be issued to the owner occupant of a single-family dwelling, or miscellaneous building upon request in writing and approval by the *building official*

131.5 Transfer of Permits. Permits shall not be transferred without first submitting a request to the Agency and obtaining a new permit with the revised information.

131.6 Cancellation of Permit by Contractor. The contractor may cancel the permit by notifying the *building official*. A new permit shall be obtained for the work to be completed. An administrative fee as set forth by the *building official* will be charged. Additional administration, plan review and inspection fees may be charged to recover the cost incurred by the Agency.

131.7 Voided Permit.

1. A construction permit shall become null and void when:
   a. Work is not commenced within 60 days from the date of permit issuance; or
   b. Work is suspended or abandoned for a period of 60 days after work is commenced; or
   c. No request for any kind of inspection has been made for a period of 60 days.
2. A demolition permit shall become null and void when:
   a. Work is not commenced within 30 days after the date of issuance.
   b. Work is suspended or abandoned for a period of 10 days after work is commenced.
3. Before work can be recommended, new plans shall be submitted, and a new permit obtained. Any fees shall be in accordance with the current fee schedule.

131.8 Suspension, Revocation, New Permits.

1. The *building official* may suspend or revoke any permit for any of the following reasons:
   a. When a permit has been issued in error.
   b. When the nature, scope or details of a project have been misrepresented to the Agency by the applicant, design professional, owner, or owner's agent.
   c. When there is a violation of any provisions of this Code or any City ordinance which the Agency is empowered to enforce.
   d. When the continuance of any work becomes dangerous to life or property. When the work built or constructed in the field differs from that of the plans approved by the Agency
2. The *building official* may re-establish a suspended permit within one year of permit suspension, provided that all conditions leading to the suspension are abated, the same series of this Code is in

force, and upon payment of a fee as set forth by the *building official*. A suspended permit that is not so re-established shall require submission of a new permit application for consideration, under the series of Code enforced at that time.

3. A revoked permit shall not be re-established but shall require submission of a new permit application for consideration, under the series of Code enforced at that time.

4. Notice of the suspension or revocation of a permit for reasons stated in this Section shall be in writing and shall be served upon the holder of the permit and the owner. It shall be unlawful to proceed with any work once the notice is served.

131.9 Access control system permit. In order to perform work on an *access control system* an access control permit shall be obtained prior to the start of work on the system. All the provisions of Section 131.9 shall be satisfied prior to the issuance of an *access control system* permit.

The Access Control Permit allows the installation of *access control systems* and electric door locks in existing buildings, additions, and new buildings. The Access Control Permit allows all the following types of permits and their corresponding *access control system* related work to be combined into one application (all permit types may not be required for each *access control system* application):

1. Construction Permit – Work performed for the installation of doors or *approved* modifications to doors and door jambs.

2. Fire Alarm Permit – Work performed for the interconnection of the *access control system* with the fire alarm and *fire detection system*.

3. Electrical Permit – Work performed for the installation of the *access control system* or component that requires circuits that carry more than 48 Volt-AC/DC, and work performed for an existing luminaire to provide emergency lighting required for the *access control system*. A new luminaire provided for emergency lighting requires a separate electrical permit.

131.9.1 Work requiring an access control permit. An *access control system* permit is required when a new *access control system* or electric locking systems are being installed or an existing system or electric lock is being modified in any new or existing building. An access control permit is also required when the *access control system* is installed outside of a building and any one of the following conditions occur:

1. The exterior *access control system* limits or affects the occupants of the building in their ability to reach the public right-of way or a required safe dispersal area as required by Section 1028.5 of the *Denver Commercial Building Code*.

2. The exterior *access control system* limits or restricts the use of an accessible route into the building.

3. The exterior *access control system* is interfaced and connected with a building's fire alarm system.

4. The exterior *access control system* is interfaced and connected to a building's elevator system.

131.9.2 Scope of work covered by an Access Control Permit. The Access Control Permit must be completed by the following licensed contractors as required by Section 121.5.1 and Section 121.5.2:

1. Access Control System Contractor

2. Electrical Signal Contractor

3. Electrical Registration Contractor

4. Building Contractor: Class A or B

5. Building Specialty Contractor Class D (related to the installation of new door and door frames and the *approved* modification of fire rated and *labeled* door and door frames).

Although the name and license number of the elevator contractor is required to be provided on the Access Control Permit, the work related to the elevator system is not covered by the Access Control Permit. A separate elevator permit shall be obtained by a licensed elevator contractor in conjunction with the Access Control Permit when the *access control system* interfaces with the elevator system.

131.9.3 Issuance of an Access Control Permit. An Access Control Permit shall only be issued to a properly licensed *access control system contractor*.

Exception: The Access Control Permit may be issued to a properly registered electrical registration contractor unless the *access control system* requires any of the following types of work or cause any of the following conditions to occur:

1. Limits or restricts *mechanical free egress*.
2. Requires work to install or modify fire rated door and/or door frames.
3. Requires work to replace doors and/or door frames.

*Contractors may print a copy of the permit inspection re*cord card available on the CPD website. Alternatively, CPD will provide a permit inspection record card to the contractor upon issuance of the permit. The Access Control Permit contractor is responsible for obtaining the required signatures on this card for all work requiring inspection and approval by CPD.

131.9.4 Access Control Permit application requirements. All the submittal requirements of Section 131.9.4 shall be satisfied prior to acceptance of the Access Control Permit application by the Agency.

131.9.4.1 Application procedures. The applicant for the Access Control Permit shall be the contractor that will be performing the access control work or their authorized representative. The applicant is responsible for completing the permit application on the form provided by the Agency. A complete description of work is to be provided with the application. The names and license numbers of the other contractors that will be performing work under the Access Control Permit shall be provided on the permit application. If the *access control system* interfaces and connects with the building's elevator system, the name and license number of the elevator contractor shall be provided on the permit application for the Access Control Permit. The permit application along with all the other submittal items required by Section 131.9.5.2 shall be presented for acceptance in the manner and at the location established by the Agency.

131.9.4.2 Plan submittal requirements. Two sets of drawings, or one electronic set of drawings showing the entire scope of the work to be performed shall be submitted with the Access Control Permit application.

131.9.4.2.1 Responsible designer. The drawings shall be prepared under the direction and control of one of the following:

1. A licensed *access control system contractor*. The contractor shall indicate their review and acceptance of responsibility for the system's design by providing an original signature and the date of signature along with their contractor license number on each drawing sheet. Alternatively, electronic drawings shall have contractor's company name and license number on each sheet and the electronic drawing file shall have a single electronic signature and date on the first sheet.
2. A licensed *access control system* supervisor. The supervisor shall indicate their review and acceptance of responsibility for the system's design by providing an original signature and the

date of signature along with their contractor license number on each drawing sheet Alternatively, electronic drawings shall have supervisor's name and certificate number on each sheet and the electronic drawing file shall have a single electronic signature and date on the first sheet.

3. A Colorado licensed design professional. The design professional shall indicate that they are the person responsible for the design of the system by placing their State of Colorado design professional seal on each drawing sheet. The seal shall be original, or computer generated. The signature and date of signature shall be original. drawings shall have design professional seal on each sheet and the electronic drawing file shall have a single electronic signature and date on the first sheet.

The name, mailing address and phone number of the person accepting responsibility for the drawings and system design shall be indicated on the plans submitted with the Access Control Permit application in accordance with the Access Control Permitting Guide.

131.9.4.2.2 Drawing content. The plans submitted shall provide all the following information:

1. The address of the building shall be included on the drawings along with a description of the location of the work.

2. The plans shall clearly indicate all doors that have *mechanical free egress*. If *mechanical free egress* is not being provided, as allowed by the provisions of this appendix, the plans shall clearly indicate the doors that do not provide *mechanical free egress*.

3. Floor plans, drawn to scale, showing the device locations and door swing direction in plan view(s). The location of all equipment involved shall be shown on the plan view(s). The location of exit signs and the path of egress shall be shown. The floor plans shall provide sufficient information so that the effect of the *access control system* on the means of egress from the floor can be fully evaluated.

4. A door and hardware schedule that specifies the type and size of each door and the hardware type and function being provided on each door.

5. A detailed narrative shall be provided that describes the system sequence of operations.

6. When the installation of the system requires the penetration of fire rated assemblies, details and/or specifications shall be provided that indicate how the fire rating of the assembly will be maintained at the penetration in accordance with Chapter 7 of the *Denver Commercial Building Code*.

7. A one-line diagram of the system design shall be provided. The diagram shall include the source of power, battery backup if provided, and interconnection with burglar alarm, fire alarm, or elevator control systems if provided. All devices in the design shall be shown on the one-line diagram. When the source of power is provided by a plug-in power supply such device shall be clearly noted on the diagram.

8. Point-to-point wiring details of all connections, including all interconnections to other building systems shall be shown. Other building systems include but are not limited to: the power distribution system, the fire alarm system, and the elevator control system.

9. Manufacturer's specification sheets for all devices that are part of the scope of work shall be provided. Specification information shall include the *approved* testing agency's file number for each device. One complete set of specification sheets should be attached to each set of plans.

131.9.4.3 Other submittal requirements. When fire rated door and or door frames are shop modified to accommodate the *access control system* installation, documentation shall be submitted with the permit application that indicates the modifications performed and the name of the shop that performed the modifications to the door or door frame. All modifications to fire rated door and door frame assemblies shall be performed by a shop that is *approved* by the *listing* and *labeling* agency as an *approved* fabricator.

131.9.4.4 Valuation of work. The applicant shall provide a statement for the valuation of the work to be performed under the *access control system* permit. The valuation of work shall be provided on the Access Control Permit application form provided by the Agency. The valuation of work shall include the contractor's profit, cost of materials, labor and overhead.

131.9.4.5 Plan review fee. Once the Access Control Permit application is reviewed and determined to be complete the applicant shall be required to pay the plan review fee required by the *Code*.

131.9.4.6 Plans review. Upon payment of the plans review fee the Access Control Permit application will be placed in the queue of the tracking system for the plans review process. The applicant will be given an application tracking number (log number). Once the plans review has been performed the applicant will be notified if the application is approved or denied. If the application is denied, the applicant will be provided with a written list of comments that describe the reasons for the denial of the application. Upon resolution of the plans review comments the application will be *approved*. The permit will be issued upon payment of the Access Control Permit fee and any additional plan review fee or other fee required by the *Code*.

SECTION 132
PERMIT APPLICATION

132.1 General. Submission of an application for permit, including drawings and specifications shall be required for review and approval by the *building official* prior to the issuance of a permit, except as set forth in Subsection 132.2.

132.2 Drawings Not Required. Drawings, specifications and engineering reports need not be submitted in the permit application for the construction, demolition or moving of minor buildings, additions, structures or utilities; or for minor alterations and repairs to existing buildings, structures or utilities when the *building official* is satisfied that the strength, safety, sanitation and fire resistance are adequately described on the permit application, or when he/she is satisfied that such construction, alterations, repair, demolition or moving will not substantially increase the hazard present in a Special Construction Zone.

132.3 New Construction, Additions, Alterations or Repairs. Application for a permit shall be accompanied by the following:

1. Drawings including the information required in this Section.
2. Copies of an engineering report containing studies and test results concerning the hazards present on the building, demolition or moving site when such site is within an area designated as a Special Construction Zone under Article VII, Chapter 10 of the Revised Municipal Code. Each report shall contain adequate information as a result of tests to allow identification of the hazards present, recommendations as to methods of minimizing the hazards during construction and methods for controlling the identified hazards likely to be present after construction. The Public Health Inspection Division and the Fire Department shall approve all reports required by this Subsection before any permit is issued. Construction shall comply with Appendix P.

3. When required by the *building official*, additional drawings shall be submitted for approval.

132.4 Acceptance. Drawings and specifications complying with the provisions of this Code and accepted by the *building official* shall bear the Agency stamp of acceptance. When corrections are required, the *building official* may require that the drawings and specifications be revised and resubmitted for acceptance prior to the issuance of a permit.

132.5 Distribution. One set of accepted drawings and specifications, known as the Contractor's Set, shall be returned to the applicant, and shall be posted on the job site until the project is completed. One set of accepted drawings and specifications, known as the Record Set, shall remain in the office of the Agency.

132.6 Disposal. Upon completion of the work and the final inspections by the Agency, the Record Set may be disposed of after 6 years have elapsed from the date of issuance of the permit. If no permit is issued, plans and specifications may be disposed of after 180 days from the date of application.

132.7 Utility Companies. With the approval of the *building official*, the design of buildings, structures or utilities for the authorized Public Utilities may vary from these Building Code requirements.

132.8 Permit Applications for Construction and Changes of Occupancy Done Without Permits. Permit applications for any construction that was done without a permit shall be submitted and reviewed as an application for new construction and shall be required to comply with the current Code. The permit application must contain complete drawings, specifications, and surveys in accordance with Section 133.

All customary and special inspections in accordance with Section 140 and 141 shall be required upon issuance of the permit.

All permits obtained in accordance with this section shall be charged late fees and investigation fees per Section 138 and are subject to inspection approval and change of occupancy requirements in Section 142.

SECTION 133
DRAWINGS, SPECIFICATIONS AND SURVEYS

133.1 Limitations. Any person may submit drawings and specifications with an application for a building permit, subject to the following limitations:

1. **Architect or Engineer required.** Construction documents for all buildings, structures, additions, alterations, or repairs shall bear the seal and signature of the licensed design professional responsible for each design phase except as provided in the following subsection. Any work as defined as the practice of engineering by the State of Colorado must be signed by a licensed design professional practicing within their area of expertise.
2. **Architect not required**. An architect is not required to prepare drawings and specifications for the following buildings, structures, additions, alterations, or repairs. However, if a licensed design professional prepares drawings and specifications for any of the following, then construction documents must bear the seal and signature of the licensed design professional.

    A. One- and two-family dwellings, including accessory buildings commonly associated with such dwellings.

    B. Three- and four-unit family dwellings, including accessory buildings commonly associated with such dwellings, provided the building is not more than one story height and shall not have a *basement* or *cellar*.

C. Additions, alterations, or repair to the buildings referred to in paragraphs (A) and (B) of this subsection that do not cause the completed buildings to exceed the applicable limitations set forth in the above subsection;

D. Nonstructural, interior, architectural alterations of any nature to a building or tenant space if such alterations do not affect the life safety of the occupants of the building or tenant space. Alterations that do affect the life safety of the building or tenant space include but are not limited to: change of use or change of occupancy; modifications to any part of the means of egress; increase in the number of occupants; modifications to the fire alarm or fire suppression systems; modifications to any fire-resistance rated horizontal or vertical assemblies; and new or modifications to existing penetrations or joints.

Exception: If determined necessary after review of the drawings and specifications, to show compliance with the codes administered by the Agency, the *building official* may require that the drawings and specifications bear the seal and signature of an architect or engineer who will be responsible for the design phases of the building or structure.

3. **Seal and Signature.** Seal and signature (manual or electronic) of the registered Design Professional in Responsible Charge and date of signature shall be affixed to all documents as required and set forth by the *building official*. The sealing and signature of documents shall be allowed pursuant to applicable rules set forth by the State of Colorado Department of Regulatory Agencies Division of Professions and Occupations for architectural, engineering and land surveying documents and as may be amended from time to time.

4. **Registered Design Professional in Responsible Charge.** When it is required that documents be prepared by an architect or engineer, the *building official* may require the owner or the owner's authorized agent to engage and designate on the building permit application an architect or engineer who shall act as the Registered Design Professional in Responsible Charge. If the circumstances require, the owner or the owner's authorized agent may designate a substitute registered design professional in responsible charge who shall perform all of the duties required of the original registered design professional in responsible charge. The *building official* shall be notified in writing by the owner or the owner's authorized agent if the registered design professional in responsible charge is changed or is unable to continue to perform the duties. The registered design professional in responsible charge shall be responsible for reviewing and coordinating all submittal documents prepared by others, including deferred submittal items, for compatibility with the design of the building.

5. **Consultant Drawings**. Consultant drawings and specifications prepared by architectural or engineering sub-disciplines shall be so designated by their name, address and phone number and shall bear the seal and signature of the responsible architect or engineer for the sub-discipline.

6. **Statement**. When a design professional signs and seals a document, a statement shall also be included setting forth the aspects of the project for which the design professional is responsible (i.e., civil, structural, mechanical). If there is no statement, it is presumed that the design professional has assumed responsibility for the entire document.

133.2 Information Required. Drawings and specifications shall be complete and of sufficient clarity to indicate the entire work proposed and show in detail that the building, structure, or equipment conforms to the provisions of this Code and relevant laws, ordinances, rules and regulations. Each set of drawings and specifications shall, at a minimum, contain the following information:

1. City designated address and location of the work performed.
2. Name of the person or firm responsible for the preparation of the drawings and specifications. The seal and signature of the architect and or engineer responsible for the preparation of the drawings and specifications when required by Section 133.1.
3. Engineering design calculations as required by the *building official* to determine compliance with the requirements of this Code.
4. Documentation as required by the *building official* to determine compliance with the *Denver Energy Code*.
5. Reports from an independent testing agency, which substantiates requirements of this Code regarding structural or fire-resistive requirements as required by the *building official* to determine compliance with the requirements of this Code.
6. Manufacturer's installation instructions, as required by this code, shall be available on the job site at the time of inspection.
7. Items as required by Sections 133.2.1 for buildings and structures regulated by the *Denver Commercial Building Code* or *Denver Existing Building Code*.
8. Items as required by Sections 133.2.2 for buildings and structures regulated by the *Denver Residential Code*.
9. Other information as required by the *building official* to determine compliance with the requirements of this Code.

133.2.1 Buildings and structures regulated by the *Denver Commercial Building Code* or *Denver Existing Building Code*

1. Except for interior alterations and repairs, the construction documents submitted with the application for permit shall be accompanied by a site plan showing to scale the size and location of new construction and existing structures on the site, distances from lot lines, the established street grades, and the proposed finished grades and, as applicable, flood hazard areas, floodways, and design flood elevations; and it shall be drawn in accordance with an accurate boundary line survey. In the case of demolition, the site plan shall show construction to be demolished and the location and size of existing structures and construction that are to remain on the site or plot. The proposed construction shall not project beyond property lines except as provided for in the *Denver Commercial Building Code* Chapter 32.

2. Construction documents showing the construction of architectural, structural, mechanical, and electrical arrangements. Narrative descriptions of the scopes of work for each discipline shall be provided on the first sheet of the respective disciplines' drawings.

3. Specifications or notes that clearly describe the type, quality and finish of materials and the method of assembly, erection, and installation of equipment to be installed with proper reference to accepted standards.

4. Architectural drawings and specifications as follows:

   A. Plans showing the arrangement of each floor, elevations, sections, and details to show the construction of all architectural features, including the location and type of fire-rated construction.

   B. The gross area in square feet of buildings or portions of buildings in which new construction or remodeling work is intended; and of each different occupancy group.

   C. A complete Code Analysis, including the list of all applicable codes to include the code cycle year, the building occupancy groups, the type of construction, and a comparison of actual floor areas and number of stories to those allowed under the provisions of this Code on the front sheet of drawings.

D. The construction documents shall show in sufficient detail the location, construction, size and character of all portions of the means of egress in compliance with the provisions of this Code. In occupancies other than Groups R-2, R-3, and I-1, the construction documents shall designate the number of occupants to be accommodated on every floor, and in all rooms and spaces.

5. Structural drawings, specifications and analysis as follows:

   A. All information required by *Denver Commercial Building Code* Section 1603.

   B. Floor and roof plans indicating the roof areas used to impound water.

   C. When required by the *building official* a soils investigation report signed and sealed by an engineer responsible for the preparation of the report.

6. Mechanical drawings, specifications and analysis as follows:

   A. Plans drawn to scale showing the locations of all mechanical equipment, routing of all ductwork, HVAC piping, medical gas piping, and locations of grilles, registers, and diffusers. Btu rating of gas units, method of combustion and ventilation air supply, type and horsepower of refrigeration, and gas meter locations.

   B. Heating, cooling, ventilating, plumbing and fire protection details and schedules fire damper, smoke damper and ceiling radiation damper locations.

   C. Shafts used for pressurization as required by *Denver Commercial Building Code* Chapter 9.

   D. For buildings more than two stories in height construction documents shall indicate where penetrations will be made for mechanical systems, and the materials and methods for maintaining required structural safety, fire-resistance rating and fire blocking.

   E. Ventilation calculations per Chapter 4 DBCA IMC.

7. Plumbing drawings, specifications, and analysis as follows:

   A. Plans drawn to scale showing the location of all plumbing equipment, routing of all plumbing piping including hot water, hot water recirculation, cold water, sanitary, grease waste, gas, storm, storm overflow, vent, and specialty piping systems.

   B. Plumbing details and equipment schedules.

   C. Waste and vent isometrics.

   D. Gas pipe sizing method identified, Btu rating of gas equipment, method of combustion air supply per IFGC, and gas meter locations.

   E. Plans and details showing the location of impounded water.

8. Electrical drawings, specifications and analysis as follows:

A. One-line diagram showing sizes of service and feeder conductors, sizes of service and feeder overcurrent devices, all major components of service and distribution system, ratings of equipment, and grounding details.

B. Load study and analysis to justify sizes of system components.

C. Short-circuit study and analysis to justify short-circuit withstand ratings of all system components.

D. Panelboard circuit schedules including loads per each circuit, total bus load per phase, AIC rating and NEC demand calculations.

E. Lighting and power plans shown on a floor plan.

F. Electric vehicle (EV) charging plan, where applicable, to include identification of the percentage of the building's area of work compared to the total area of the building, the number of actual provided and accessible parking spaces for the area of work, the building's occupancy types, number of *EV Ready, EV Capable*, and *EV Supply Equipment Installed* spaces. Locations of all associated devices, wiring, distribution, and routing of conduit shall be shown on the plan.

G. The Electrical Code of the City and County of Denver cycle year that the proposed electrical work was designed.

9. A field survey under Section 133.3 for all additions and new construction.

10. A complete elevator and dumbwaiter layout, if applicable.

11. Statement of *special inspections* per *Denver Commercial Building Code* Section 1704.3.

133.2.2 Buildings and structures regulated by the *Denver Residential Code*. Construction documents must show the complete scope of the proposed work conforming to the provisions of this Code, including, but not limited to, architectural elements, structural elements, mechanical, electrical, and plumbing fixture arrangements, and all site work, including excavation, shoring, and landscape.

1. Site plan or plot plan. The construction documents submitted with the application for permit must include a site plan showing the size and location of new construction and existing structures on the site and distances from lot lines. In the case of demolition, the site plan shall show construction to be demolished and the location and size of existing structures and construction that are to remain on the site or plot. The building official is authorized to waive or modify the requirement for a site plan where the application for permit is for alteration or repair or where otherwise warranted based on minor scope and limited impact on the code compliance of the design.

2. Architectural drawings and notes as follows:

   A. Plans showing the arrangement of each floor, elevations, sections, and details to show the construction of all architectural features.

   B. A list of all applicable codes to include the code cycle year.

   C. The gross floor area in square feet of structures where the work is intended.

3. Structural drawings, notes, and analysis as follows:

   A. Plans and details that show the structural design meets the requirements of the *Denver Residential Code* and all structural elements have a clear load path to the foundation. Current codes, load assumptions and strength and grading of materials shall be called out on the plans.

   B. Manufacturer calculations or load tables for engineered beams that are not specifically included in the *Denver Residential Code* (i.e. I-Joist, LVL, LSL, PSL, Glulam)

   C. Calculations for structural elements and systems that are not regulated by the *Denver Residential Code.*

   D. A letter of inspection and integrity shall be included when structural modifications will affect an existing structure.

   E. Information on prescriptive braced wall design including the locations of braced wall lines, the intended method(s) of wall bracing to be used, and the minimum length of bracing required and provided. Detail and indicate braced wall panel requirements including foundation attachment, blocking, framing, sheathing, nailing patterns, and corner conditions.

   F. When required by the *building official* a soils investigation report based on R401.4.

4. Excavation, benching, sloping, and shoring drawings and notes as follows:

   A. Plans and details to show the extent of the excavation.

   B. Structural drawings, notes, and analysis for engineered shoring, benching, and underpinning.

   C. Evidence of notification to adjoining property owners per DCBC Section 3307.

5. If applicable, mechanical, plumbing, and electrical construction documents, notes, and analysis as outlined in Section 133.2.1.

6. Field survey containing the information in Section 133.3. A Land Survey Plat is required for construction of a new dwelling. An Improvement Survey Plat is required for additions to existing buildings when the exterior wall of the proposed work is located less than three feet from the lot line, and for a change in occupancy from an accessory structure to a dwelling.

7. For buildings and structures located in whole or in part in flood hazard areas as established by DCBC Section 1612.3 or DRC Table R301.2, construction documents shall include:

   A. Delineation of flood hazard areas, floodway boundaries and flood zones and the design flood elevation, as appropriate.

   B. The elevation of the proposed lowest floor, including basement; in areas of shallow flooding (AO Zones), the height of the proposed lowest floor, including basement, above the highest adjacent grade.

133.3 Field Surveys. A Land Survey Plat or an Improvement Survey Plat shall be conducted by a land surveyor registered by the State of Colorado for the construction of a new building or structure, an addition to an existing building or structure or a change of occupancy for an existing building or structure which shall include, but not be limited to the following information:

1. Scale drawing of the boundaries of the land parcel with all dimensions to establish those boundaries.
2. All recorded and apparent rights-of-way and easements.
3. Improvement locations shall be shown in scale with a minimum of 2 dimensions to the nearest property line to locate all improvements.

133.4 Deferred Submittals. Deferred submittals are defined as those portions of the design which are not submitted at the time of permit application, and which are to be submitted to the Agency within a specified period. Deferral of any submittal items shall have prior approval of the *building official*. The registered design professional in responsible charge shall list the deferred submittals on the plans and shall submit the deferred submittal documents for review by the Agency. The design professional in responsible charge shall review the deferred submittal documents and forward them to the Agency with a notation indicating that the deferred submittal documents have been reviewed and that they have been found to be in general conformance with the design of the building. The deferred submittal items shall not be installed until their design and submittal documents have been *approved* by the Agency.

SECTION 134
PERMITS FOR TEMPORARY STRUCTURES AND USES

134.1 General. The *building official* is authorized to issue a permit for temporary structures, temporary uses and temporarily-placed *relocatable buildings*. The provisions of Section 3103 of the *Denver Commercial Building Code* are applicable to structures and buildings permitted under Section 134.

134.2 Time of Service. Except for permits for temporary structures or temporarily-placed relocatable buildings associated with an R-X occupancy, such permits shall be limited as to time of service, but shall not be permitted for more than 180 days or a longer timeframe as allowed by the *building official* after review of a specific proposal. The *building official* is authorized to grant extensions for demonstrated cause. The *building official* may grant a permit for 2 years, and one 2 year extension only for any temporary structures or temporarily-placed relocatable buildings associated with an R-X occupancy, subject to more strict timeframes in Section 429.13 of the *Denver Commercial Building Code*.

134.3 Conformance. Temporary structures, temporary use, or temporarily-placed *relocatable buildings* shall comply with the requirements of Section 3103 of the *Denver Commercial Building Code*, and with the requirements and limitations of any other City ordinance or rule and regulation.

Exception: Where approved by the *building official* and the *fire code official,* buildings serving as emergency residential shelters shall not be required to conform to all requirements of Section 3103.1.1 of the *Denver Commercial Building Code* when the *building official* and *fire code official* determine there are practical difficulties involved in carrying out the provisions of this code that make enforcement

of the strict letter of this code impractical. The details of any action granting modifications shall be sent to the building owner and entered into the permit files of the Agency.

134.4 Termination of approval. In accordance with Sections 131.6 and 142.6 of this Code, the *building official* is authorized to terminate such permit for a temporary structure, temporary use, or temporarily-placed *relocatable buildings* and to order the temporary structures, temporary use, or temporarily-placed *relocatable buildings* to be discontinued.

SECTION 135
PHASED APPROVAL

135.1 General. The *building official* is authorized to issue a permit for the construction of foundations or any other part of a building or structure, except for structures regulated by the *Denver Residential Code*, and *Denver Commercial Building Code* Group U occupancy structures, to a contractor who holds a license qualifying him/her as the general contractor for the entire project, provided that:

1. The total valuation of the project exceeds $1,000,000 or as *approved* by the *building official*.
2. Prior to the submitting the first phase of the project, the *building official* approves a Phased Construction Proposal (the "Proposal") submitted by the applicant outlining the schedule for the phased construction and designating the registered design professional in responsible charge. The Proposal must provide a title for each phase and describe the building system(s) to be reviewed in each of the phased submittal packages. The proposal shall state the valuation for each phase and include an estimated submittal date for each of the phases.
3. Drawings of the proposed superstructure containing sufficient detail relating to the design of the foundation or substructure, including floor plans, elevations and other pertinent information shall be submitted to the Agency with a watermark "for information only". Drawings for each phase shall, on each sheet, include the title for the phase as defined in the Proposal and the term "Phased Construction".
4. A complete code analysis for the entire building including egress plans is provided to the Agency.
5. Structural calculations shall be submitted to validate the gravity and lateral load design of footings, caissons, and all other foundation permit elements.
6. The valuation of the portion of the work, including utilities, shall be restated with each phased application.
7. The approval of appropriate City agencies has been obtained prior to issuing each such phased permit. For purposes of the Section, the term "Project" shall mean one building only with a valuation in conformance with Section 138.

The holder of such permit for the foundation or other parts of a building or structure shall proceed at the holder's own risk with the building operation and without assurance that a permit for the entire structure will be granted.

135.2 Fee. The plan review fee and the permit fee charged at the time of issuance of the phased permit shall be as set forth by the *building official* in policy.

135.3 Deviations. Any deviation from the previously issued permit drawings shall be cause for the cancellation of the permit(s). However, if changes are substantiated by engineering calculations and revised drawings, the deviations may be *approved* by the *building official*.

135.4 Responsibility. The contractor shall assume full responsibility for the installation of all utilities in the substructure. Any changes to completed portions of the structure necessitated by subsequent modification in design or construction to meet the requirements of this Code for the combined structure shall be the sole responsibility of the contractor.

SECTION 136 (Reserved)

SECTION 137 (Reserved)

SECTION 138
PERMIT FEES

138.1 Plan Review, Permit and Inspection Fees. The fee for each plan review and permit shall be based on the total value or valuation of all construction work for which the permit is issued, as well as all finish work, roofing, electrical, plumbing, heating, air conditioning, elevators, fire-extinguishing systems and any other permanent equipment. Total valuation shall also include the cost of all labor, materials, profit, and overhead. The determination of fees, value, or valuation under any of the provisions of this Code shall be made by the *building official* in policy.

When submittal documents are required by Section 132, a plan review fee shall be paid at the time of initial document submission. Plan review fees provide for the first and second review only. When re-review of plans is required for plans or drawings that are rejected, submitted incomplete, not in accordance with Sections 133, to address indicated Code deficiencies, project modification, changed to require additional plan review, or when the project involves deferred submittal items as defined in Section 133.4 an additional fee shall be incurred as set forth by the *building official* in policy. The plan review fees specified in this Section are separate from and in addition to permit fees.

Permit fees provide for the customary inspections only. Re-inspections shall require a fee as set forth by the *building official*.

138.2 Late Fees. When work is started without a permit, the fees for permits on the work performed, shall be double those set forth by the *building official* for a standard permit, with a minimum of $100. The payment of this late fee shall not relieve any person from fully complying with the requirements of this Code in the execution of the work or from other penalties for performing work without a permit.

> **Exception:** For work performed on an emergency basis, as determined by the *building official*, to maintain an existing service or equipment when the maintenance is necessary to protect health, life or safety, the late fees listed above shall not apply if application for a permit is made within 3 normal working days after commencement of the emergency work.

138.3 Investigation for Work Without a Permit. When any work has been commenced without first obtaining a permit, a special investigation shall be made before a permit may be issued for the work. An investigation fee equal to the amount of the late permit fee required by this Code shall be assessed when work

has begun without a permit. The payment of such investigation fee shall not exempt any person from compliance with all other provisions of this Code nor from any penalty or fees prescribed by law.

138.4 Permit Fees for Denver Agencies. Enterprise Fund agencies of the City and County of Denver which are not subsidized by the General Fund shall pay permit fees for all construction and repair work for which building permits are required. General Fund agencies and Enterprise Fund agencies subsidized by the General Fund shall pay permit fees for new construction projects only.

138.5 Additional Fees. When the valuation of a previously permitted project is amended, a supplementary permit shall be obtained for any additional valuation, not included in the original permit. The fee shall be the difference between the fee paid and the fee that would have been required had the original permit included the entire valuation.

138.6 Waivers, Reductions and Refunds. No fee shall be waived or reduced, unless specifically authorized by a written policy adopted by the *building official*. No refund will be granted for any fee paid to the Agency, unless otherwise expressly allowed.

Exception: The *building official* may approve requests for refund of fees for duplicate or out-of-City permits that are made in writing within 60 days of the date of issuance. A processing fee as set forth by the *building official* shall be charged and deducted from the refund.

SECTION 139
[DOTI] SITE CONTACT INFORMATION

139.1 General. Any project subject to a site development plan review for new construction is required upon building permit issuance to post a site contact information sign on the property, except one- and two- family dwellings and their accessory structures.

139.1.1 Contact information and sign size requirements. The sign shall clearly display the following information:

1. Contractor or developer name.
2. Project name.
3. Project address.
4. Project contact information (phone number and email address).
5. Project completion date: estimated.

Information characters shall be white on a blue background, a minimum of 4 inches (102 mm) high with a minimum stroke width of ½ inch. The minimum size of the sign shall be 3 feet by 5 feet.

139.1.2 Sign location. The sign shall be displayed at the project site in a manner that makes it visibly accessible to the general public, however it shall not obstruct the public right-of-way. If the sign is mounted on a dedicated support system, no part of the support system may encroach upon the pedestrian sidewalk/pathway. The sign shall not encroach into the pedestrian sidewalk/pathway more than 4 inches unless it is mounted higher than 7 feet above the existing grade. Signs shall be maintained by the contractor or developer for cleanliness, visibility, positioning, and accuracy of information.

SECTION 140
INSPECTIONS

140.1 On Job Site. The contractor who is issued a general construction permit shall post the following, at the front of the job site, in a permanent visible location with numbers and letters made of durable materials and of a size to be visible and legible from the street fronting the property:

1. The address number and street, avenue, court, parkway or other, as assigned by DOTI Right-of-Way Services.
2. The name of the firm, address, business phone number and emergency phone number of the contractor issued the general construction permit.
3. The building permit number.

140.2 Access for Agency. The contractor or property owner shall provide unobstructed access to and means for the Agency to inspect the required work, including corner stakes or survey markers.

140.3 Inspection Record Card. Work requiring a permit shall not be commenced until the permit holder or his agent has posted or otherwise made available an inspection record card so as to allow the Agency to make the required entries regarding inspection of the work. This card shall be maintained by the permit holder until final approval has been granted by the *building official*.

140.4 Approval Required. Approval by the Agency shall be required at progressive stages of the construction of the building or structure and the installation of the mechanical, plumbing and electrical systems. The Agency shall make the requested inspections and shall either confirm that the completed portion of the construction is satisfactory or shall notify the permit holder or contractor that the construction fails to comply with this Code. Any portion of construction that does not comply shall be corrected and such work shall not be covered or concealed until *approved* by the Agency. The Agency must complete a final inspection and approval of all completed construction before the building, structure or portion thereof shall be ready for occupancy and use.

140.5 Required Inspections. The following inspections shall be required and shall be made by the Agency after proper notification. Other inspections may be required, as specified by the *building official*.

1. **Foundation Inspection.**
   A. Footings. Inspections shall be conducted prior to pouring concrete. The footing excavation form work and any reinforcing steel must be in place. Any clay soil pipe encountered must be replaced with schedule 40 PVC, ABS/DWV or cast iron pipe by a licensed plumber, under a separate permit. All such work shall be *approved* by the Agency prior to the footing inspection.

   B. Walls. Concrete walls shall have the form work and reinforcing steel inspected prior to the concrete placement. *Approved* treated wood walls shall be inspected as required by AF&PA Technical Report 7-87.

   C. Waterproofing/Damp-proofing Inspection. To be conducted after the waterproofing/damp-proofing system or materials are completely in place and exposed for inspection.

   D. Exterior wall insulation and drain tile when required.

2. **Concrete slab or under-floor inspection**. To be made after all in-slab or under-floor building service equipment, conduit, piping accessories and other ancillary equipment items are in place, but before any concrete is placed or floor sheathing installed, including the subfloor.

3. **Frame Inspection**. To be conducted on the completed frame construction with all fire blocking and bracing in place. All framing must be exposed to view. Roof and wall sheathing or panel must be complete with windows in place. All rough installations or electrical, plumbing, and mechanical systems shall have prior approval by the Agency.

4. **Insulation Inspection.** To be conducted after the installation of the insulation is completed.

5. **Air Infiltration Barrier Inspection**. To be conducted after the air infiltration barrier system is in place and complete.

6. **Gypsum Board or Lath and Plaster Inspection**. To be conducted after all gypsum board or lath, interior and exterior, is in place but before gypsum board joints and fasteners are taped and finished or before plastering is applied.

   Exception: The attachment and taping of gypsum board to partition walls that are not part of a fire-resistance rated assembly or a shear wall assembly for construction in occupancies A, B, E, F, M, U and S.

7. **Type IV-A, IV-B, and IV-C connection protection inspection.** In buildings of Type IV-A, IV-B, and IV-C Construction, where connection fire resistance ratings are provided by wood cover calculated to meet the requirements of Section 2304.10.1, inspection of the wood cover shall be made after the cover is installed, but before any other coverings or finishes are installed.

8. **Mid-roof Inspection.** To be conducted on all tile, metal, and clay roofs and all roofs on commercial buildings after all underlayment, battens, and flashings are installed and no more than 30 percent of the roofing is installed.

9. **Final Inspection**. To be conducted after construction is completed (all permits other than the general construction permit must have final approval) and the building or space is ready for occupancy.

140.6 RESERVED

140.7 Additional Inspections

140.7.1 Other Inspections. In addition to the inspections specified, the *building official* may make or require other inspections of any construction work to ascertain compliance with the provisions of this Code and other laws, which are enforced by the Agency.

Other inspections, requested to be conducted outside of business hours shall be requested no later than 12 noon of the day the inspection is needed, and incur additional fees as set forth by the *building official*.

140.7.2 Reinspection. A reinspection is required when the inspected work is not complete, corrections called for have not been made, approved plans are not readily available for an inspector during an inspection, failing to provide access on the date of a requested inspection, or deviation from plans requiring the approval of the building official. To obtain a reinspection, the applicant shall file an application therefore in writing upon a form furnished for that purpose and pay the reinspection fee as set forth by the *building official*. Where reinspection fees have been assessed, no additional inspection of the work will be performed until the required fees have been paid.

140.7.3 Vertical and Horizontal Conveyance Inspection. Inspections of conveyances shall be made in accordance with the Conveyance Regulations of the State of Colorado as delegated to the Denver Fire Department.

140.8 Access control system permit inspection process. All *access control system* work shall be inspected and accepted by the Agency prior to starting the operation of the system. All of the requirements of the Administration Section shall be satisfied prior to the final acceptance of the *access control system* work by Agency inspections.

140.8.1 Required inspections. The *access control system contractor* shall be responsible for requesting and obtaining an Agency inspector's approval on all required inspections. A separate rough-in inspection and a separate final inspection shall be performed for all of the following work:

1. Access control system work.
2. Electrical work greater than 48 Volt-AC/DC.
3. Fire alarm system work.
4. Elevator system work.

The final inspection for the *access control system* will not be performed until the final inspection has been *approved* for all other related work. The *access control system* shall be ready for inspection prior to requesting the final *access control system* inspection.

140.8.2 *Agency* inspector responsibility. The following *Agency* or *FPD* inspectors shall be responsible for performing the rough-in and final inspections on the *access control system* work:

1. An Agency electrical inspector shall perform all inspections required for electrical work greater than 48 Volt-AC/DC.
2. An Agency electrical inspector shall perform all inspections required for fire alarm system work.
3. An Agency or *FPD* elevator inspector shall perform all inspections required for the elevator system work.
4. An Agency construction inspector shall perform the inspections on the work being performed under the Access Control Permit that is not inspected by another Agency inspection group.

140.8.2.1 Inspection related duties. It will be the responsibility of Agency or *FPD* inspectors to perform the following inspection related duties:

1. Verify that *labeling* has been provided on all modified fire-rated doors and frames.
2. Performing testing of the *access control system*. If testing is required to be performed by an electrical or elevator inspector, the construction inspector shall coordinate with the other inspectors to assure that the overall systems function as designed.
3. Coordinate with the *FPD* when Fire Department related issues occur during the installation of the *access control system*, the elevators, or the fire alarm system.
4. Assure that the permit record has been signed and *approved* by all the inspection groups that are required to inspect work on the *access control system* being installed.
5. Finalize the Access Control Permit at the completion of the final inspection process.

140.8.3 Access control system maintenance. All *access control systems* shall be maintained to remain in compliance with this appendix and the specific operational requirements of the system that was originally

permitted. Failure to maintain the system in compliance with the requirements of this appendix and the originally *approved* system design requirements and conditions shall be cause to require the operation of the system to be suspended or removed. When the *access control system* interfaces with the buildings fire alarm and/or elevator control systems and these systems are not maintained in a fully operational condition, the operation of the *access control system* may be required to be suspended until these related systems are fully operational.

SECTION 141
SPECIAL INSPECTIONS

141.1 Special Inspections. For projects governed by the *Denver Commercial Building Code* or the *Denver Residential Code*, *Denver Commercial Building Code* Chapter 17 for special inspection requirements apply.

141.2 Structural Observation. For projects governed by the *Denver Commercial Building Code* or the *Denver Residential Code*, *Denver Commercial Building Code* Chapter 17 for structural observation requirements apply.

SECTION 142
FINAL INSPECTION APPROVAL, CERTIFICATE OF COMPLIANCE AND CERTIFICATE OF OCCUPANCY

142.1 Final Inspection Approval. A final inspection approval shall be issued by the *building official* upon the completion and approval of the work covered by the permit.

142.2 Certificate of Occupancy Required. New buildings except Group U occupancy detached *private garages* and *Denver Residential Code* non-habitable *accessory structures* shall not be used or occupied in whole or in part until a Certificate of Occupancy is issued by the *building official*. No building or portion thereof shall be used or occupied for any occupancy other than the one designated on the Certificate of Occupancy until a new Certificate of Occupancy is issued by the *building official*. Issuance of a Certificate of Occupancy shall not be construed as an approval of a violation of the provisions of this Code or of any other ordinances of the City and County of Denver.

A permitted temporary change in the occupancy of an existing building or portion thereof shall not occur until a Certificate of Occupancy for the temporary change in occupancy is issued by the *building official*.

142.2.1 Denver Residential Code Regulated Buildings Certificate of Occupancy. A certificate of occupancy is required for new IRC structures or for a change of occupancy that results in a change in use within the scope of this code to any of the following uses:

1. One-family dwelling.
2. Two-family dwelling.
3. Townhouse.
4. Congregate living facility.
5. Lodging house.
6. Care facility.
7. Live/work unit.
8. Family child-care home providing care for 6 or more children.

Certificate of Compliance Required. A certificate of compliance will be issued by the *building official*, when a Certificate of Occupancy is not required or appropriate, but where documentation is necessary to indicate that all final inspections by the Agency have been satisfactorily completed. The Certificate may be issued upon the request of the General Building Contractor when the inspection card issued by the Agency is returned indicating that all final inspections are complete.

142.3 Issuance of Certificate of Occupancy. When all the conditions of this Chapter have been fulfilled, the *building official* shall issue a Certificate of Occupancy indicating *building official* approval and the use and occupancy for which the certificate is issued. The Certificate of Occupancy shall be issued to the owner after approval by the *building official* and:

1. Concurrence by DOTI Construction Engineering Division, Wastewater Management and Zoning Administration.
2. When required by the provisions of this Code, or specifically requested in writing at the time of application, concurrence by Public Health Inspection Division and the Fire Department.
3. When a building or structure is designated for preservation or is located in a district designated for preservation pursuant to Chapter 30, Denver Revised Municipal Code, and concurrence of the Landmark Preservation Commission.
4. When a building or structures contains income restricted units required per Chapter 27 of the Denver Revised Municipal Code, concurrence of the Department of Housing Stability.

142.4 Issuance of Certificate of Compliance. Upon the request of the General Building Contractor a certificate of compliance will be issued by the *building official*, when items 1-4 below are met:

1. A Certificate of Occupancy is not required or appropriate.
2. A Certificate of Compliance is required in response to an order of the *building official*, or other Agency.
3. The inspection card issued by the Agency is returned indicating that all final inspections by the Agency have been made.
4. The processing fee, as set forth by the *building official*, is received by the Agency.

142.5 Temporary Certificate of Occupancy. Upon written request, the *building official* may issue a Temporary Certificate of Occupancy (TCO) to the owner provided that no substantial hazard will result from the occupancy. The written request must be made by the owner or the owner's agent, itemizing the uncompleted work, justify the issuance of the TCO and display concurrence from the following City Agencies:

1. Department of Transportation and Infrastructure (DOTI) Construction Engineering.
2. DOTI Wastewater Management Division.
3. Denver Department of Public Health and Environment.
4. Fire Department.
5. Zoning Administration

A TCO processing fee as set forth by the *building official* shall be assessed. The approval of a TCO shall not waive, reduce, or diminish any requirements of this Code. The Temporary Certificate of Occupancy may be granted for a period up to 12 months and may be extended up to two times with the approval of the *building official*. After the expiration date of the TCO, the building or structure shall require a permanent Certificate of Occupancy in accordance with other provisions of this Chapter.

Additional inspections required for the TCO shall be charged as set forth by the *building official* and shall be paid before the permanent Certificate of Occupancy is issued.

142.6 Cancellation of Certificate of Occupancy. The *building official* may cancel a Certificate of Occupancy when:

1. The Certificate is issued in error or based on incorrect or false information.
2. The owner has failed to comply with the requirements of the *building official* after appropriate notice and reasonable time to correct.
3. The continued occupancy of the structure is dangerous to the public health, safety, or welfare.

142.7 Duplicate Certificates. Upon payment of a fee set forth by the *building official*, a duplicate Certificate of Occupancy or Certificate of Compliance may be secured by the owner, architect, engineer, contractor, permit holder or tenant.

142.8 Posting. For all buildings, except those constructed under the *Denver Residential Code*, the Certificate of Occupancy (CO) shall be posted on an interior wall in the building for which the CO was generated. The CO shall be posted in a conspicuous location subject to the approval of the *building official*. The CO shall be posted between 48" and 72" above the finished floor from which it will be normally viewed, as close to the main entrance as practicable. The CO shall be protected by a smooth and transparent surface permanently exposed for viewing. The posted CO shall be removed only under the following conditions:

1. When necessary to conduct maintenance including reconstruction of the wall in the same location or install a new finish on the wall. The CO shall be reposted in the same location when maintenance is complete.
2. When the wall is demolished. The CO shall be reposted on an interior wall subject to the location requirements above.
3. When replaced by an updated CO application for the same portion of the building. The updated CO shall be posted in the same location as the CO it replaces.
4. When relocation is necessary due to changes in the interior environment that prevent clear viewing such as furniture or decoration modifications. New posting locations shall be subject to approval by the *building official*.

Exception: The CO is permitted to be available in the on-site office of the building owner or management company provided access is available at all times during business hours.

142.9.1 Multiple Certificates of Occupancy. Multiple COs issued for portions of the same building shall be posted together per the location requirements specified above so all are readily viewable.

Exception: COs issued for separate tenants or spaces with separate exterior entrances are permitted to be posted in those spaces per the location requirements specified above.

142.9.2 Temporary Certificates of Occupancy. The location requirements of Sections 142.9 and 142.9.1 shall also apply to temporary Certificates of Occupancy (TCOs). Subject to the approval of the *building official*, a CO issued to replace a TCO is permitted to be posted in the same location as the TCO it replaces.

SECTION 2

CONSTRUCTION CODES

2022 DENVER COMMERCIAL BUILDING CODE

2022 DENVER EXISTING BUILDING CODE

2022 DENVER RESIDENTIAL CODE

2022 DENVER MECHANICAL CODE

2022 DENVER PLUMBING CODE

2022 DENVER FUEL GAS CODE

2022 DENVER ENERGY CODE

2022
DENVER COMMERCIAL BUILDING CODE

COMPRISED OF

2022 DENVER AMENDMENTS

TO THE 2021 EDITION OF THE

INTERNATIONAL BUILDING CODE (IBC) AND APPENDICES

AS PUBLISHED BY THE INTERNATIONAL CODE COUNCIL (ICC)

The content of the sections in this code that begin with a bracketed letter or letters indicates the content comes from other City or State entities.

[F]	**Fire Code**
[DOTI]	**Department of Transportation and Infrastructure**
[EB]	**Existing Building**
[CDH]	**Colorado Division of Housing**
[Z]	**Zoning Code**
[DPHE]	**Department of Public Health and Environment**

The 2021 International Building Code and all errata to that code is hereby adopted and incorporated by reference except for the amendments to each chapter and appendix of the 2021 International Building Code specified below.

CHAPTER 1
ADMINISTRATION

SECTION 101
SCOPE AND GENERAL REQUIREMENTS

Section 101.1 Title is replaced in its entirety as follows:

101.1 Title. These regulations shall be known as the Denver Commercial Building Code (DCBC), hereinafter referred to as "this code."

Section 101.4 Referenced codes is amended by adding the following sentence to the end of the section:

Any references to the International Energy Conservation Code, International Fire Code, International Fuel Gas Code, International Mechanical Code, International Plumbing Code, International Residential Code, International Existing Building Code, and NFPA 70 means the Denver Energy Code, Denver Fire Code, Denver Fuel Gas Code, Denver Mechanical Code, Denver Plumbing Code, Denver Residential Code, Denver Existing Building Code, and the Electrical Code of the City and County of Denver, respectively.

Section 101.4.4 Property maintenance is deleted in its entirety.

Section 102.6 Existing Structures is modified by deleting the reference to the *International Property Maintenance Code*.

102.6.2 Buildings previously occupied is modified by deleting the reference to the *International Property Maintenance Code.*

Sections 103 through 116 are deleted in their entirety. Article 1 of the 2022 Denver Building Code shall govern.

CHAPTER 2
DEFINITIONS

SECTION 201
GENERAL

(Where understanding of a term's definition is especially key to or necessary for the understanding of a particular code provision, the term is shown in italics wherever it appears in the code.)

SECTION 202
DEFINITIONS

Section 202 Definitions is amended by adding, modifying, or replacing the following definitions:

ACCESS CONTROL SYSTEM. A group of devices including control unit(s), electric hardware, wiring and raceways electrically interconnected to control and regulate ingress and egress.

ACCESS CONTROL SYSTEM CONTRACTOR. A contractor licensed to install, add to, alter, or repair control units, electric hardware, wiring, and raceways electrically interconnected to control and regulate ingress and egress with voltages less than or equal to 48 Volts.

ACCESS CONTROL SYSTEM UNIT. The component(s) of an access control system that provide system logic and control (e.g., reader electronic panels, stand-alone keypads, telephone entry controllers, burglar alarm system units with access control capability, intercom controllers and door entry buzzers or buttons).

ABANDON. The desertion of a building, structure, or utility.

ADEQUATE. Determined to be acceptable to the Agency.

ALCOHOL BEVERAGE (also "Alcoholic Beverage"). A liquid *ethanol* mixture intended for human consumption including wine, beer, and beverage *spirits*.

AMBULATORY. A physical or mental condition under which a person is capable of judgment and appropriate action for self-preservation under emergency conditions.

APPROVED. *Approved* as to materials and types of construction, as determined by the *building official* following investigation and tests conducted by him, or by reason of accepted principles or tests by recognized authorities, technical or scientific organizations.

ARCHITECT. An architect licensed by the State of Colorado.

AREA OF RESCUE ASSISTANCE. An elevator lobby area separated from adjacent spaces where persons in need of assistance can remain temporarily to await rescue.

ASSISTED CARE FACILITIES. See definition for *Personal Care Facilities.*

CONSTRUCTION. The act of using labor and materials used for erection, demolition or removal of a building, structure, utility, appliance, or device.

DEMOLITION. The destruction and removal of a building, structure, or utility.

DETERIORATION. The effect upon buildings, structures, utilities, equipment and materials through corrosion, decay, wear and tear due to use or abuse, obsolescence, effects of the elements, fire damage, disaster, flood, earthquake, lack of maintenance, vandalism or any other cause, including fatigue due to overstressing and disintegration of component parts and the separation of materials and structural parts.

DROP-OUT CEILING. A suspended ceiling system with panels that are heat sensitive and fall from their setting when exposed to heat.

ELECTRIC HARDWARE. Any door hardware or accessory product that is used in a circuit as a conductor, load, power supply or switch.

ELECTRIC STRIKE. Lock strike that is modified to release the latch bolt with the application or removal of electric power.

ELECTRIC LOCK. Any locking or latching door hardware that relies on electrical energy for its operation.

ELECTRIC LOCKS – MASTER SWITCH. A two-position, toggle electrical switch labeled "ELECTRIC LOCKS" with its positions labeled "LOCKED" and "UNLOCKED" configured to immediately and simultaneously unlock all connected door locks.

ELECTRICAL CONTRACTOR. Colorado State licensed electrical contractor.

ELECTRICAL SIGNAL CONTRACTOR. A contractor licensed to install, add to, alter or repair electrical wiring and equipment for fire alarm, fire detection, emergency voice communication systems, electrical signaling and control wiring with voltages less than 48 Volts.

ENGINEER. An Engineer licensed / registered by the State of Colorado as a Professional Engineer.

ETHANOL. A volatile, flammable, colorless, neurotoxic liquid fit for human consumption with structural formula CH-3CH-2OH (abbreviated as C_2H_5OH or C_2H_6O).

EVACUATION CAPABILITY. The ability of the occupants, residents, and staff as a group either to evacuate a building or to relocate from the point of occupancy to a point of safety. Following are the levels of evacuation capability:

1. *Prompt.* Evacuation capability equivalent to the capability of the general population to evacuate a facility. Evacuation drill time shall be 3 minutes or less.
2. *Slow.* Evacuation capability of a group to move to a point of safety in a timely manner, with some occupants requiring assistance from the staff. Evacuation drill time shall be over 3 minutes, but not exceed 13 minutes.
3. *Impractical.* A group that, even with staff assistance, cannot reliably move to a point of safety in a timely manner. Evacuation drill time is more than 13 minutes.

FAIL-SAFE LOCK. A lock that unlocks automatically upon loss of power.

FAIL-SECURE LOCK. A lock that remains locked during loss of power.

FPB. Fire Prevention and Investigation Division, of the Denver Fire Department.

FIRE DEPARTMENT. The Fire Department of the City and County of Denver.

[F] FLAMMABLE GAS. A material that is a gas at 68ºF (20ºC) or less at 14.7 pounds per square inch atmosphere (psia) (101 kPa) of pressure [a material that has a *boiling point* of 68ºF (20ºC) or less at 14.7 psia (101 kPa)] ~~which also meets one of the following~~subdivided as follows:

1. Category 1A. A gas that meets either of the following:
   1.1 A gas that is ignitable at 14.7 psia (101 kPa) when in a mixture of 13 percent or less by volume with air.

1.2 A gas with a flammable range at 14.7 psia (101 kPa) with air of at least 12 percent, regardless of the lower limit, unless data shows compliance with Category 1B.

2. Category 1B. A gas that meets the flammability criteria for Category 1A, is not pyrophoric or chemically unstable, and meets one or more of the following:

2.1 A lower flammability limit of more than 6 percent by volume of air.

2.2 A fundamental burning velocity of less than 3.9 inches/second (99 mm/s).

~~1. Is ignitable at 14.7 psia (101 kPa) when in a mixture of 13 percent or less by volume with air.~~

~~2. Has a flammable range at 14.7 psia (101 kPa) with air of at least 12 percent, regardless of the lower limit.~~

The limits specified shall be determined at 14.7 psi (101 kPa) of pressure and a temperature of 68ºF (20ºC) in accordance with ASTM E681.

Where not otherwise specified, the term "flammable gas" includes both Category 1A and 1B.

HOME OCCUPATION. Limited commercial use of a portion of a residential unit as permitted by the Denver Zoning Code.

LIVE/WORK UNIT. A *dwelling unit* or *sleeping unit* in which a significant portion of the space includes a nonresidential use that is operated by the resident and does not have approval from the Zoning Administrator as a *home occupation*.

LOWEST LEVEL OF FIRE DEPARTMENT VEHICLE ACCESS. The lowest level of Fire Department vehicle access shall be measured from the lowest elevation of any required Fire Department access road located no more than 30 feet (9144 mm). from any exterior wall of the building.

Exceptions:

1. Where the access road is permitted to be farther than 30 feet (9144 mm). to any exterior wall of the building, the lowest level of Fire Department vehicle access shall be measured from the lowest elevation of any required Fire Department access road located no more than 50 feet (15 240 mm) from any exterior wall of the building.

2. If any topography, waterway, non-negotiable grades, or other similar conditions exist that preclude required Fire Department vehicular access, the *fire code official* is authorized to require additional fire protection systems as required by Chapter 9.

MAINTENANCE. The normal upkeep of property or equipment to keep it in an existing state, such as minor repairs to keep equipment operational.

MECHANICAL FREE EGRESS. Door hardware that mechanically unlocks and unlatches the door, from the egress side with a single motion without the use of a key, card or any special knowledge or effort.

NEC. National Electrical Code (NFPA 70).

NONAMBULATORY. See definition for "*Incapable of Self-Preservation*".

NURSING HOME. A facility that is operating in connection with a hospital or where nursing care and medical services are prescribed by or performed under the general direction or persons licensed to practice medicine or surgery by the State of Colorado or for the accommodation of convalescents or other persons who are not actually ill and not in need of hospital care and related services. The term "nursing home" is restricted to facilities designed to provide skilled nursing care and related medical services for a period of not less than 24 hours per day and where any person is incapable of self-preservation.

OCCUPIED ROOF. The roof of a building or structure used for purposes other than maintenance, repair or servicing of the building equipment.

PERSONAL CARE SERVICE. Protective care of residents who do not require chronic or convalescent medical or nursing care. Personal care involves responsibility for the safety of the resident while inside the building. Personal care may include daily awareness by the management of the resident's functioning and whereabouts, making and reminding a resident of appointments, the ability and readiness for intervention in the event of a resident experiencing a crisis, supervision in the areas of nutrition and medication, and actual provision of transient *medical care*.

PERSONAL CARE FACILITY. A facility that provides for personal care services. A personal care facility does not provide *medical care*.

RECOGNIZED VOLUNTEER ORGANIZATION. A nonprofit organization recognized by the Internal Revenue Service as a charitable or religious organization.

SCHOOL: PUBLIC, PRIVATE OR CHARTER. An institution which provides instruction or education at elementary, secondary and high school learning levels.

SHEAR-TYPE MAGNETIC LOCK. A magnetic lock that relies on a shear pin, post, concave/convex machining, or other similar projections to enhance the latching strength of the lock.

SMOKE CONTROL SYSTEM. An engineered mechanical and electrical system designed to provide a tenable environment for the evacuation or relocation of occupants and control the development and movement of smoke.

SPIRIT. An *ethanol* mixture produced by the distillation of wine, wash, or a previously distilled *spirit*.

STRUCTURE. An assembly of materials forming a construction for a specific use including, among others, buildings, stadiums, tents, reviewing stands, platforms, staging, observation towers, radio and television towers, water tanks, swimming and wading pools, retaining walls, open sheds, coal bins, shelters, fences, and display signs. This definition shall not include utilities.

TENANT. A person or persons occupying a building or portion thereof. The tenant shall have a lease to occupy the specified space from the owner.

UNIVERSAL VEHICLE CHARGING STATIONS. Parking spaces provided for *electric vehicle charging stations* that can be utilized for all users and complies with Chapter 11.

USABLE SPACE. Space that may be used. This definition does not apply when usable or potential usable space is sealed off so that access to the area is not provided.

UTILITIES. For the purpose of this code, utilities shall be defined, without limitation to include the following: Refrigeration systems and their appurtenances; electrical systems and all appurtenances, such as motors, etc.; heating and ventilation systems and appurtenances; elevators, dumbwaiters, escalators and similar conveyances; fire protection systems and apparatus; air conditioning or air treatment systems, including ductwork; exhaust or ventilating systems, including ductwork; plumbing and sanitary systems and all appurtenances; signal and annunciator systems; gas, oil and solid fuel-fired appliances, piping, controls, burners and their appurtenances; evaporative cooling, antennae, wells and equipment; water heaters; gas lights; swimming pool piping; gasoline pumps; and L.P.G. liquid fuel and gasoline tanks and piping.

VALUE OR VALUATION. The building replacement value for permit purposes including labor, profit, overhead, materials, base building equipment and appliances. The determination of *value or valuation* shall

be made or directed to be made by the Agency.

WORK. All construction or repair excluding decoration or maintenance of existing utilities or appliances.

CHAPTER 3
USE AND OCCUPANCY CLASSIFICATION

SECTION 302
OCCUPANCY CLASSIFICATION AND USE DESIGNATION

Section 302.1 Occupancy classification is amended by replacing item 8 as follows:

8. Residential (see Section 310): Groups R-1, R-2, R-3, R-4, and R-X

SECTION 306
FACTORY GROUP F

Section 306.2 Moderate-hazard factory industrial, Group F-1, is amended by adding the following items to the list of factory industrial uses:

Beverages up to and including 16-percent alcohol in combustible containers

Greenhouses, buildings, or portions thereof used to cultivate, grow, enrich, or otherwise process agricultural plants or products where unique operations, systems or hazards regulated by the *Denver Fire Code* exist that create significant fire and life safety hazards.

Section 306.3 Low-hazard factory industrial, Group F-2 is amended by replacing the first item in the list of factory industrial uses with the following:

Beverages up to and including 16-percent alcohol in noncombustible containers

SECTION 307
HIGH-HAZARD GROUP H

TABLE 307.1(1) HAS BEEN AMENDED AS FOLLOWS:

MATERIAL	CLASS	GROUP WHEN THE MAXIMUM ALLOWABLE QUANTITY IS EXCEEDED	STORAGE[b]			USE-CLOSED SYSTEMS[b]			USE-OPEN SYSTEMS[b]	
			Solid pounds (cubic feet)	Liquid gallons (pounds)	Gas (cubic feet at NTP)	Solid pounds (cubic feet)	Liquid gallons (pounds)	Gas (cubic feet at NTP)	Solid pounds (cubic feet)	Liquid gallons (pounds)
Flammable gas	Gaseous									
	1A and 1B (High BV)[r]	H-2	NA	NA	1,000[d,e]	NA	NA	1,000[d,e]	NA	NA
	1B (Low BV)[r]				162,500[d,e]			162,500[d,e]		
	Liquified									
	1A and 1B (High BV)[r]	H-2	NA	(150)[d,e]	NA	NA	(150)[d,e]	NA	NA	NA
	1B (Low BV)[r]			(10,000)[d,e]			(10,000)[d,e]			

r. "High BV" Category 1B flammable gas has a burning velocity greater than 3.9 in/s (10 cm/s). "Low BV" Category 1B flammable gas has a burning velocity of 3.9 in/s (10 cm/s) or less.

Section 307.1.1 Uses other than Group H is amended by replacing items 18 and 19 as follows:

18. The production and storage of *alcohol beverages* with concentrations by volume (ABV) up to and including 16-percent conforming to the requirements of the *Denver Fire Code*.

19. Battery-charging areas for powered industrial trucks regulated by Section 309 of the *Denver Fire Code*.

Section [F] 307.4 High-hazard Group H-2 has been amended to include Category 1A and Category 1B *flammable gases* as follows:

Category 1A *flammable gases.*

Category 1B *flammable gases* having a burning velocity greater than 3.9 inches per second (10 cm/s).

Section [F] 307.5 High-hazard Group H-3 has been amended to include Category 1B *flammable gases* as follows:

Category 1B *flammable gases* having a burning velocity of 3.9 inches per second (10cm/s) or less.

SECTION 308
INSTITUTIONAL GROUP I

Section 308.5.5 Twelve or fewer children receiving care in a detached one- or two-family dwelling or townhouse is added as follows:

308.5.5. Twelve or fewer children receiving care in a detached one- or two-family dwelling or townhouse. Child care provided in a *dwelling unit* complying with the Denver Residential Code Section R202 definition of a *Family Child Care Home* shall be classified as a Group I-4 occupancy or shall comply with the provisions of the Denver Residential Code.

SECTION 310
RESIDENTIAL GROUP R

Section 310.4.1 Care facilities within a dwelling is replaced in its entirety as follows.

310.4.1 Care facilities. Care facilities for five or fewer persons receiving *custodial* or *medical care* are permitted to comply with the Denver Residential Code.

Section 310.4.2 Lodging houses is replaced in its entirety as follows:

310.4.2 Lodging houses. *Lodging houses* with five or fewer *guestrooms* and 10 or fewer total occupants shall be permitted to comply with the Denver Residential Code.

Section 310.4.3 Congregate living facilities is added as follows:

310.4.3 Congregate living facilities. *Congregate living facilities* (*transient or nontransient*) with 10 or fewer occupants shall be permitted to comply with the Denver Residential Code.

Section 310.6 Residential Group R-X is added as follows:

310.6 Residential Group R-X. A residential Group R-X occupancy is a group of two or more detached buildings, each building consisting of a single sleeping unit, where the occupants are primarily non-transient in nature. A Group R-X sleeping unit shall not contain cooking facilities. Except as otherwise required by Section 429, residential Group R-X occupancies shall be permitted to be constructed in accordance with the Denver Residential Code. Group R-X buildings shall not be more than one story above grade plane in height. Basements are prohibited in Group R-X buildings.

A detached community building with cooking facilities and a dining area is required to be provided with a Group R-X occupancy project. Storage for each resident shall be provided within the sleeping unit, the shared community building, or in a separate storage building.

SECTION 311
STORAGE GROUP S

Section 311.2 Moderate-hazard storage, Group S-1 is amended by adding the following to the list of storage items:

Beverages up to and including 16-percent alcohol in combustible containers

Section 311.3 Low-hazard storage, Group S-2 is amended by replacing the second item in the list of storage items with the following:

Beverages up to and including 16-percent alcohol in noncombustible containers

SECTION 312
UTILITY AND MISCELLANEOUS GROUP U

Section 312.4 Fences and retaining walls is added as follows:

312.4 Fences and retaining walls.

312.4.1 General. Section 312.4 shall apply to all fences or walls in excess of 4 feet (1219 mm) in height, all retaining walls in excess of 3 feet (914 mm) in height. For exempted work refer to Section 130.3 of Section 1 of the *Denver Building Code*.

312.4.2 Design. All fences, walls and retaining walls shall be designed in accordance with Section 1807 and 1609 of this code.

CHAPTER 4
SPECIAL DETAILED REQUIREMENTS BASED ON OCCUPANCY AND USE

SECTION 403
HIGH-RISE BUILDINGS

[F] Section 403.3.2 Water supply to required fire pumps is replaced in its entirety as follows:

Section 403.3.2 Water supply serving high-rise buildings. Water supply serving *high-rise buildings* shall be provided in accordance with Section 507.2.3 of the *Denver Fire Code*.

[F] Section 403.4.1 Smoke detection is replaced in its entirety as follows:

[F] 403.4.1 Smoke detection. Smoke detection shall be provided in accordance with Section 907.2.13.1 of the *Denver Fire Code*.

[F] Section 403.4.2 Fire alarm systems is replaced in its entirety as follows:

[F] 403.4.2 Fire alarm systems. A *fire alarm system* shall be provided in accordance with Section 907.2.13 of the *Denver Fire Code*.

[F] Section 403.4.3 Standpipe system is replaced in its entirety as follows:

[F] 403.4.3 Standpipe system. A standpipe system shall be provided in accordance with Section 905 of the *Denver Fire Code*.

[F] Section 403.4.4 Emergency voice/alarm communication systems is replaced in its entirety as follows:

[F] 403.4.4 Emergency voice/alarm communication system. An emergency voice/alarm communication system shall be provided in accordance with the Section 907 of the *Denver Fire Code*.

[F] Section 403.4.5 Emergency communication coverage is replaced in its entirety as follows:

[F] 403.4.5 Emergency communication coverage. Emergency responder radio coverage shall be provided in accordance with the Section 510.1 of the *Denver Fire Code*.

[F] Section 403.4.6 Fire command is replaced in its entirety as follows:

[F] 403.4.6 Fire command center. A *fire command center* shall be provided in accordance with Section 508 of the *Denver Fire Code*.

Section 403.4.7 Smoke removal is replaced in its entirety as follows:

Section 403.4.7 Smoke control. Smoke control shall be provided in accordance with Section 909 of the *Denver Fire Code*.

[F] Section 403.4.8 Standby and emergency power systems and their subsections are replaced in their entirety as follows:

[F] 403.4.8 Emergency power. An emergency power system complying with Section 2702 shall be provided for the emergency power loads specified in Section 403.4.8.3.

[F] 403.4.8.1 Equipment room. If the emergency power system includes a generator set inside a building, the system shall be located in a separate room enclosed with 2-hour *fire barriers* constructed in accordance with Section 707 or *horizontal assemblies* constructed in accordance

with Section 711, or both. System supervision with manual start and transfer features shall be provided at the *fire command center*.

Exception: In Group I-2, Condition 2, manual start and transfer features for the critical branch of the emergency power are not required to be provided at the *fire command center*.

[F] 403.4.8.2 Fuel line piping protection. Fuel lines supplying a generator set inside a building shall be separated from areas of the building other than the room the generator is located in by an *approved* method or assembly that has a *fire-resistance rating* of not less than 2 hours. Where the building is protected throughout with an *automatic sprinkler system* installed in accordance with Section 903.3.1.1 or 903.3.1.2, the required fire-resistance rating shall be reduced to 1 hour.

[F] 403.4.8.3 Emergency power loads. The following are classified as emergency power loads:

1. Power and lighting for the *fire command center* required by Section 403.4.6.
2. *Ventilation* and automatic fire detection equipment for *smokeproof enclosures.*
3. Elevators.
4. Where elevators are provided in a *high-rise building* for *accessible means of egress*, fire service access or occupant self-evacuation, the standby power system shall also comply with Sections 1009.4, 3007 or 3008, as applicable.
5. Exit signs and *means of egress* illumination required by Chapter 10.
6. Elevator car lighting.
7. *Emergency voice/alarm communication systems.*
8. Automatic fire detection systems.
9. *Fire alarm* systems.
10. Electrically powered fire pumps.
11. Smoke control equipment

[F] Section 403.5.3 Stairway door operation is replaced as follows:

[F] 403.5.3 Stairway door operation. Stairway doors other than the exit discharge doors shall be permitted to be locked from the *stairway* side when signage is provided in accordance with Section 1023.9.2 of this code. *Stairway* doors that are locked from the *stairway* side shall unlock simultaneously without unlatching upon a fire alarm or loss of power or an *electric locks – master switch* signal from the *fire command center.* The lockset shall be wired to all three of these monitor/power/control points.

[F] Section 403.5.6 Accessible means of egress elevator and area of rescue assistance and subsections are added as follows:

[F] 403.5.6 Accessible means of egress elevator and area of rescue assistance. An accessible means of egress elevator complying with Section 1009.4 shall be provided in *high-rise buildings* and shall be accessed directly from an *area of rescue assistance*. Each *area of rescue assistance* shall comply with Section 1009.6 and shall be separated from the remainder of the story by a *smoke barrier* complying with Section 709.

Exceptions:

1. *Areas of rescue assistance* are not required at the elevator in Group S-2 open parking garages; or in Group I-2 or I-3 occupancies.
2. In Group R1, R2, and I1 occupancies, an elevator complying with Section 1009.4 with a fire-resistive *corridor* providing direct access to the elevator from all dwelling units or sleeping units shall be permitted to serve as a required accessible means of egress.
3. *Areas of rescue assistance* at elevators in enclosed parking garages shall be permitted to be enclosed in accordance with Section 509.4.2.

403.5.6.1 Travel Distance. The maximum travel distance from any accessible space to an accessible means of egress elevator complying with this section shall not exceed the exit access travel distance permitted for the occupancy in accordance with Section 1017.1.

403.5.6.2 Occupant evacuation elevators. Where occupant evacuation elevators are provided in accordance with Section 403.6.2, *areas of rescue assistance* shall be located at these elevators.

403.5.6.3 Area of rescue assistance pressurization. The *area of rescue assistance* at the accessible means of egress elevator shall be pressurized by the transfer of air from the pressurized hoist way through the leakage at the elevator doors.

SECTION 405
UNDERGROUND BUILDINGS

Section 405.8 standby and emergency power is replaced as follows:

405.8 Emergency power. An emergency power system complying with Section 2702 shall be provided for the emergency power loads specified in Section 403.4.8.3

SECTION 406
MOTOR-VEHICLE-RELATED OCCUPANCIES

[DOTI] 406.4.4 Motor vehicle exiting from parking facilities is added as follows:

[DOTI] 406.4.4 Motor vehicle exiting from parking facilities. Where ramps are provided for motor vehicles to exit from a parking facility or from a private drive onto the public right of way, the ramps shall be sloped at 0.5 percent minimum to 2 percent maximum for a distance at least 20 feet (6096 mm) inside of the building or property line. Vertical curves shall be used at all grade breaks.

Exception. The *building official* may approve an alternative slope upon the recommendation of the "Transportation, Engineering and Planning Division" of the Department of Transportation and Infrastructure.

SECTION 412
AIRCRAFT RELATED OCCUPANCIES

Section 412.1 General is replaced as follows:

412.1 General. Aircraft-related occupancies shall comply with Sections 412.1 through 412.7, Appendix S, and the *Denver Fire Code*.

SECTION 414
HAZARDOUS MATERIALS

Section 414.1.1 Other provisions is replaced as follows, subsections to remain:

[F] 414.1.1 Other provisions. *Buildings and structures* with an occupancy in Group H shall comply with this section and the applicable provisions of Section 415 and the *Denver Fire Code*. A performance-based design alternative may be proposed in accordance with Section 5001.3 of the *Denver Fire Code*.

Section [F] 414.2.5 Hazardous materials in Group M display and storage areas and in Group S storage areas has been amended as follows:

[F] 414.2.5 Hazardous materials in Group M display and storage areas and in Group S storage areas. *Hazardous materials* located in Group M and Group S occupancies shall be in accordance with Sections 414.2.5.1 through ~~414.2.5.3~~414.2.5.4.

Section 414.2.5.4 Flammable gas and Table 414.2.5.4 has been added as follows:

414.2.5.4 Flammable gas. The aggregate quantity of Category 1B *flammable gas* having a burning velocity of 3.9 inches per second (10 cm/s) or less stored and displayed within a single *control area* of a Group M occupancy or stored in a single *control area* of a Group S occupancy is allowed to exceed the maximum allowable quantities per *control area* specified in Table 307.1(1) without classifying the *building* or use as a Group H occupancy, provided the materials are stored and displayed in accordance with the *Denver Fire Code* and quantities do not exceed the amounts specified in Table 414.2.5.4.

[F] TABLE 414.2.5.4 MAXIMUM ALLOWABLE QUANTITY OF LOW BURNING VELOCITY CATEGORY 1B FLAMMABLE GAS IN GROUP M AND S OCCUPANCIES PER CONTROL AREA[a]

CATEGORY 1B (Low BV)[d]	MAXIMUM ALLOWABLE QUANTITY PER CONTROL AREA	
	Sprinklered[b]	Nonsprinklered
Gaseous	390,000 cu ft	195,000 cu ft
Liquefied	40,000 lb[c]	20,000 lb

For SI: 1 pound = 0.454 kg, 1 square foot = 0.0929 m^2, 1 cubic foot = 0.028 m^3, 1 inch per second = 2.54 cm/s.

a. Control areas shall be separated from each other by not less than a 1-hour fire barrier.
b. The building shall be equipped throughout with an approved automatic sprinkler system with a minimum sprinkler design density of Ordinary Hazard Group 2 in the area where flammable gases are stored or displayed.
c. Where storage areas exceed 50,000 square feet in area, the maximum allowable quantities area is allowed to be increased by 2 percent for each 1,000 square feet of area in excess of 50,000 square feet, up to not more than 100 percent of the table amounts. Separation of control areas is not required. The aggregate amount shall not exceed 80,000 pounds.
d. "Low BV" Category 1B flammable gases has a burning velocity of 3.9 in/s or less.

Section 414.2.6 Hazardous material in live/work units and subsections are added, as follows:

414.2.6 Hazardous material in live/work units. Hazardous materials located at a *live/work unit* shall comply with 414.2.6.1 through 414.2.6.3.

414.2.6.1. Flammable and combustible liquids. The aggregate quantities of flammable and combustible liquids permitted within a single *live/work unit* shall not exceed 10 gallons (38 L). All flammable and combustible liquids shall be stored in liquid storage cabinets in accordance with Section 5704.3.2 of the *Denver Fire Code* and the amount in use shall not exceed 1 gallon (3.8 L).

414.2.6.2. Flammable gas. The aggregate amount of flammable gas, including LPG, within each *live/work unit* shall not exceed 1-one-pound cylinder in use with 1-one-pound cylinder in storage.

414.2.6.3. Outside storage. Flammable and combustible liquids and flammable gases shall not be stored outside and adjacent to a *live/work unit*.

[F] Table 414.5.1 has been amended as follows:

[F] TABLE 414.5.1 EXPLOSION CONTROL REQUIREMENTS[a, h]

MATERIAL	CLASS	EXPLOSION CONTROL METHODS	
		Barricade Construction	Explosion (deflagration) venting or explosion (deflagration) prevention systems[b]
Hazard Category			
Flammable gas	Gaseous	Not Required	Required[j]
	Liquefied	Not Required	Required[j]

j. Not required for Category 1B flammable gases having a burning velocity not exceeding 3.9 in/s (10cm/s).

SECTION 415
GROUPS H-1, H-2, H-3, H-4 AND H-5

Section 415.5 Emergency alarms is replaced as follows, subsections to remain:

[F] 415.5 Emergency alarms. Emergency alarms for the detection and notification of an emergency condition in Group H occupancies shall be provided as set forth herein and in accordance with Sections 908 and 5004 of the *Denver Fire Code*.

SECTION 420
GROUPS I-1, R-1, R-2, R-3 AND R-4

Section 420.12, Group R-2 refuse collection areas is added as follows:

420.12 Group R-2 refuse collection areas. Buildings containing group R-2 occupancies having more than five *dwelling units* shall be provided a refuse collection area with occupant access in accordance with this section.

Exception: Where curbside pickup is available for each *dwelling unit*.

420.12.1 Interior refuse collection areas. Where refuse collection areas are provided inside a building,

they shall comply with all the following:

1. Access to a public way or to on site vehicular access, large enough to remove the largest container in the collection area, shall be provided.
2. Floors, walls, and ceilings of the refuse collection area shall be finished in a smooth, cleanable surface.
3. Exhaust ventilation shall be provided at the rate of 1cfm/ft^2. Exhaust air shall not be recirculated or transferred to any other space.
4. Doors between interior spaces of the building and the refuse collection area shall be weather-stripped.
5. Areas provided with waste or recycling chutes shall comply with Section 713.13.
6. A floor drain shall be provided.
7. The area shall be used for no other function other than refuse collection.

420.12.2 Exterior refuse collection areas. Where refuse collection areas are provided outside of a building, siting, and screening of the area shall comply with the Denver Zoning Code.

420.12.3 Vehicular access. Where refuse collection pickup requires vehicular access on the building site, such access shall comply with all the following:

1. Not less than 14 feet (4267mm) of vertical clearance to any obstructions.
2. Not less than 10 feet (3048 mm) in width.

420.12.4 Minimum size. Refuse collection areas shall be a minimum of 1.5 square feet (0.14 m^2) in area per *dwelling unit*, but not less than 100 square feet (9.3 m^2).

Exception: Where demonstrated that refuse pickup frequencies or other building features reduce the necessity for the minimum room [collection area] size and is *approved* by the *building official*.

420.12.5 Waste, recycling, and compost container floor area. Refuse collection areas shall accommodate refuse separation and containment for waste, recycling, and compost in accordance with all the following:

1. Recycling containers shall be provided a floor area not less than the floor area provided for waste containers.
2. Compost containers shall be provided a floor area not less than one-half the floor area provided for waste containers.
3. Recycling and compost containers shall be provided occupant access within the collection area equivalent to that of the waste containers.
4. Signage or identified containers shall be provided to clearly identify the material intended for each container or portion of the collection area.
5. Containers shall comply with Section 304.3 of the *Denver Fire Code*.

Section 429 Residential Group R-X is added as follows:

SECTION 429
RESIDENTIAL GROUP R-X

429.1 General. Group R-X *sleeping unit(s)* shall comply with Section 429.

429.2 Individual sleeping unit floor area. The habitable floor area of an individual *sleeping unit* shall be not less than 70 square feet (6.5 m^2). The minimum interior dimension of the habitable area of an individual *sleeping unit* shall not be less than 7 feet (2134 mm). A Group R-X *sleeping unit* shall be 400 square feet (37.2 m^2) or less in floor area, excluding lofts. Habitable floor areas shall have a ceiling height of not less than 7 feet 6 inches (2286 mm) above the finished floor.

429.3 Maximum occupant load. The maximum occupant load within a *sleeping unit* shall be limited to one person per 50 square feet (4.6 m^2) of habitable floor area.

429.4 Building separation distances. The minimum separation between individual *sleeping units* is 10 feet (3048 mm). The separation distance between *sleeping units* and the community building or any storage building shall comply with the provisions of Section 705.3. A *sleeping unit* and the community building shall not be considered portions of a single building. A *sleeping unit* and a storage building shall not be considered portions of a single building. To apply the provisions of Section 705.3 the *sleeping units* shall be considered a Group R-3 occupancy.

> **Exception:** Reduced building separation distances shall be considered when exterior walls complying with the requirements of Section 705 are incorporated into the construction of the *sleeping units*. For the purpose of applying the provisions of Section 705.3, the imaginary line between two *sleeping units* shall be centered between the buildings. In no case shall the separation between buildings be reduced to less than 5 feet (1524 mm). The minimum separation distance between roof overhangs is 4 feet (1219 mm).

429.5 Fire apparatus access roads. *Approved* fire apparatus access roads complying with the requirements of Section 503 of the *Denver Fire Code* shall extend to within 150 feet (45 720 mm) of all portions of any sleeping unit and all portions of the exterior walls of the *sleeping units*, as measured by a Denver Fire Prevention Division *approved* route around the exterior of the *sleeping units.*

To apply the provisions of Table 503.2.1 of the *Denver Fire Code,* Group R-X occupancies shall be considered single-family detached buildings without alleys or driveways that extend to the road.

The installation of a security gate across a *fire apparatus access road* must be *approved* by the *fire code official*.

429.6 Individual *sleeping unit* address. Individual *sleeping units* shall be provided with *approved* address identification in accordance with Section 505. A permanent weatherproof sitemap identifying the address numbers of the *sleeping units* shall be provided at the entrance into a campus of *sleeping units.*

429.7 *Sleeping unit* exterior stairway illumination. The exterior stairway of a *sleeping unit* shall be provided with a light source located at the top of the *stairway*.

429.8 Fire hydrants. All portions of any *sleeping unit* must be located no more than 600 feet (182 880 mm) from a fire hydrant. Hydrants must provide a fire-flow as defined in Table 429.8 at a minimum residual pressure of 20 psi.

TABLE 429.8
REQUIRED NUMBER OF HYDRANTS AND FIRE-FLOW

Aggregate floor area of buildings (square feet)	Minimum number of hydrants required	Hydrant fire-flow (gpm)	Flow duration (hours)
0 – 3,600	1	1,500	1
3,601 – 4,800	1	1,750	1
4,801 – 6,200	2	2,000	2
6,201 – 7,700	2	2,250	2

429.9 Fire protection. Smoke alarms shall be provided in in accordance with Section 907.2.11. To apply the provisions of Section 907.2.11 the Group R-X *sleeping units* shall be considered a Group R-1 occupancy.

429.10 Accessibility. Where there are four or more *sleeping units* on a site at least one sleeping unit shall be a Type B unit. Accessibility shall be designed in accordance with Chapter 11. In Group R-X occupancies with 20 or more *sleeping units* on one site, at least 5 percent but not less than one of the *sleeping units* shall be a Type B unit.

429.11 Plumbing facilities. The *sleeping units* shall be provided with minimum plumbing facilities as specified by Chapter 29, for a residential *dormitory* classification, except that a single bathtub or shower is permitted to serve up to 10 *sleeping units* and drinking fountains are not required. Where a group of *sleeping units* includes a Type B unit, toilet and bathing facilities shall comply with Section 1110.2. The path of travel to these facilities shall not exceed 200 feet (60 960 mm) from any *sleeping uni*t or from the community building.

Only potable water shall be supplied to plumbing fixtures that provide water for drinking, bathing or cooking purposes. A potable water supply system shall be designed, installed and maintained in such a manner to prevent contamination from non-potable liquids, solids or gases being introduced into the potable water supply through cross connections or any other piping connections to the system.

The community building shall provide a water dispenser that is manually controlled by the user for dispensing potable drinking water into a receptacle such as a cup, glass or bottle. Such fixture shall be connected to the potable water distribution system of the premises. This definition includes a free-standing apparatus for the same purpose that is not connected to the potable water distribution system and that is supplied with potable water from a container, bottle, or reservoir.

The community building shall be provided with a kitchen area and every kitchen area shall be provided with a sink.

429.12 Group R-X cooking facilities. Domestic cooking appliances, within a community building accessory to Group R-X *sleeping units*, for use by the residents shall be in compliance with all of the following:

1. The types of domestic cooking appliances shall be limited to ovens, cooktops, ranges, warmers, coffee makers and microwaves.
2. Domestic cooking appliances shall be limited to *approved* locations.
3. Cooktops and ranges shall be protected in accordance with Section 904.14.1.1.
4. Cooktops and ranges shall be provided with a domestic cooking hood installed and constructed in

accordance with Section 505 of the Denver Mechanical Code.

429.13 Lofts. Lofts used as sleeping or living space within a Group R-X *sleeping unit* shall conform to the requirements of Appendix Section AQ104 of the Denver Residential Code.

429.14 Temporarily placed relocatable *sleeping units* and associated buildings. Temporarily placed relocatable *sleeping units* and associated buildings shall comply with the provisions of Section 3103 of this code.

Exceptions:

1. Where *approved* by the *building official*, temporary structures and *relocatable buildings* may be placed on a site for a period of up to four years without a permanent foundation.
2. Where *approved* by the *building official*, Denver Water, and Department of Transportation and Infrastructure, temporary structures and *relocatable buildings* may be placed on a site for a period of up to 180 days without being connected to a public water supply and without the sanitary drainage from plumbing fixtures being connected to a public sewer. There may be one 180-day extension granted by the *building official* when required. A formal request must be submitted thirty days prior to the required vacancy. Where a water tank is used to supply potable water to plumbing fixtures, the interior surface of the tank shall be lined or coated to conform to NSF International standard NSF-61. The interior surface of a potable water tank shall not be lined, painted, or repaired with any material that changes the taste, odor, color or potability of the water supply when the tank is placed in, or returned to, service.

429.15 Outside storage. Outside storage of combustible materials and hazardous materials, including aerosols and propane, between adjacent sleeping units is prohibited.

429.16 Existing *sleeping units*. The legal occupancy of any existing *sleeping unit* on the date of adoption of this code shall be permitted to continue without change, except as is specifically covered in this code, or the *Denver Fire Code*, or as is deemed necessary by the *building official* for the general safety and welfare of the occupants and the public.

SECTION 430
AIRCRAFT NOISE REDUCTION FOR MULTI-UNIT DWELLINGS AND SCHOOLS

430.1. Scope

1. This section shall apply to any new or remodeled Group R-1 or R-2 occupancy, Denver Residential Code *townhouse* or Group B and Group E educational occupancies (which shall mean those uses permitted under the Denver Zoning Code under the Education Use Category or uses permitted under the Former Chapter 59 under school, elementary or secondary; school, vocational, professional or other; school, vocational professional or other, small; or university or college uses) within the area shown in Exhibit A as the DIA Influence Area.
2. The intent of this language is to mitigate interior noise levels associated with current and future noise due to the proximity to Denver International Airport.
3. These design/construction methods apply only to the exterior façade elements of a building, not to any interior walls.
4. Design requirements and methods:
   a. **Design method I.** Is a prescriptive method which defines minimum construction requirements in terms of exterior wall and roof construction, exterior wall and attic insulation, and STC and

OITC ratings of windows and doors, and the configuration of vents for gas appliances and other venting appliances. No design calculations are required in this method. See Section 430.3. This design method is allowable for multi-unit dwellings.

b. **Design method II.** Building design by analysis using the OITL Rating Method. See Section 430.4. This design method is allowable for multi-unit dwellings or school/educational uses.

c. **HVAC requirements.** Regardless of which design method is used, the HVAC requirements of Section 430.6 must be met.

5. Compliance of a structure to this code, the Denver Residential Code, and the Denver Energy Code does not ensure compliance with requirements set forth in this article. Conversely compliance with the requirements in this article does not ensure compliance with the exterior wall and attic insulation and window R-values required in this code, the Denver Residential Code, and the Denver Energy Code.

6. The OITL rating method as outlined in ASTM E 1332 uses a reference sound spectrum that accounts for the spectral content of noise from aircraft. Therefore, method II inherently accounts for the low frequency spectral content of jet aircraft noise.

430.2 Definitions. The following words, terms, and phrases, when used in this section, shall have the meanings ascribed to them in this section, except where the context clearly indicates a different meaning:

1. **Acoustical professional** is a professional engineer, an Institute of Noise Control Engineering (INCE) Member or Board Certified INCE member.

2. **A-weighted decibels, dB(A)** means ten times the logarithm (to the base 10) of a power or intensity ratio with A-weighting which correlates with the human response to the loudness of sounds.

3. **Composite transmission loss** means the combined TL rating of all the exterior façade elements for a room or group of rooms, weighted based on the area and STC rating of each individual element.

4. **Facade elements** means construction elements of the residence that comprise the building envelope from the outside surface of the element to the interior surface of the element. Typical façade elements are doors, windows, wall assemblies, roof assemblies, vents, fireplaces, etc.

5. **Noise level reduction (NLR)** means a reduction in A-weighted sound levels.

6. **Sound transmission class (STC)** is the most common rating used in North America to for determining airborne sound transmission loss between 125 and 4,000 Hz. It was created to provide a single number rating for interior building partitions that are subjected to noises from speech, television, radio, office equipment and other mid to high frequency noise sources. The STC rating is calculated in accordance with ASTM E413 (originally published in 1970). The rating is calculated by comparing the measured sound transmission loss to a reference contour curve. The STC rating must only be assigned to specimens tested in a laboratory. If specific materials are not laboratory tested, an acoustic professional can submit a report to be reviewed and *approved* by the *building official*.

7. **Outside inside transmission class (OITC)** is calculated in accordance with ASTM E1332 (originally published in 1990). It was created to provide a single number rating for facades (exterior walls) and façade elements (windows and doors) that are subject to transportation noises (aircraft, trains, automobiles, and other low to mid frequency noise sources). The OITC is calculated over the frequency range of 80 to 4,000 Hz. An apparent OITC rating can be assigned to specimens tested in the field and in the laboratory.

8. **Outside to inside transmission loss (OITL),** of a building facade, means in a specified frequency band ten times the common logarithm of the ratio of the airborne sound power incident on the

exterior of the facade to the sound power transmitted by the facade and radiated to the interior. The quantity so obtained is expressed in decibels (dB).

9. **Remodeling or Remodeled** means any construction activity in a structure that includes but is not limited to:
    a. Any addition to the principle structure, or;
    b. Any alterations to an exterior façade, including window and door replacement projects. Only the areas being renovated or replaced require compliance with this section.
10. **Sound insulation** means the capacity of a structure to prevent sound from reaching a receiving location.
11. **Sound level,** of airborne sound means a sound pressure level obtained using a signal to which a standard frequency weighting has been applied such as A-weighting.
12. **Transmission loss (TL)** of an exterior façade element means, for a specific frequency band, the difference between the average sound pressure levels from the source side of the façade element to the receiving side of the façade element (expressed in decibels) plus ten times the logarithm to the base 10 of the ratio of the area of the façade element to the total acoustical (sabine) absorption in the receiving room.

430.3 Design method I. This method requires the registered design professional to follow the construction requirements for all exterior façade elements as listed in the tables below (Table 430.3).

TABLE 430.3
CONSTRUCTION REQUIREMENTS FOR
MULTI-UNIT DWELLINGS

FAÇADE ELEMENT	MINIMUM REQUIREMENT
Exterior walls	Minimum STC rating of 32 and OITC rating of 25
Structural	2" by 6" wood or metal studs (minimum)
Insulation	R-19 Batt insulation or full cavity fill blown cellulose
Interior applications	1 layer of 1/2" or 5/8" gypsum
Exterior applications	5/8” OSB or plywood sheathing and exterior finish material to meet applicable codes
Basements	Basements are excluded, as long as basement windows and sliding glass doors have minimum STC ratings of 32 and OITC 25.
Exterior floors and cantilevered floors	Normal construction, except for full joist fill insulation
FAÇADE ELEMENT	**MINIMUM REQUIREMENT**

Roofs and exterior ceilings	Minimum attic insulation shall be R-38. Joist type vaulted roof/ceiling structures are allowed, coffered ceilings are acceptable. Truss type vaulted ceilings are allowed and shall have a minimum truss depth of 14".
Skylights	Minimum STC rating of 32 and OITC rating of 25
Doors	Minimum STC rating of 32 and OITC rating of 25
Exterior swing doors	Solid core or composite door assembly with jamb seals and sweeps. Door assembly shall have a minimum STC rating of 32 and OITC rating of 25. The STC criteria mentioned for each entry can include a storm door assembly.
Sliding glass doors	Minimum STC rating of 32 and OITC rating of 25
Windows	Minimum STC rating of 32 and OITC rating of 25

430.3.1 General construction notes. All exterior walls, roofs and exposed floors shall be of airtight construction. All non-lap joints shall be grouted or caulked airtight with a non-hardening, non-shrinking sealant installed in accordance with manufacturer's specifications. Any penetrations of exterior walls or roofs by pipes, ducts or conduits shall be sealed airtight as required for joints. Door and window openings in exterior walls shall be flashed all around with an *approved* vapor barrier and sealed to prevent air infiltration. All voids at doors and windows caused by shims shall be filled solid with insulation and sealant. Sill sealant shall be used to prevent air infiltration at all base plates of exterior walls. Attic and crawl space vents shall not exceed minimums specified by ordinance. Crawl space vents shall be baffled as shown in figure 430.6.3.2. See Section 430.6 for building mechanical systems.

430.4 Design method II. Generally, this requirement is for schools/educational uses, but may also be utilized for multi-unit dwelling construction. Design method II requires an acoustical professional to follow the design specifications and construction techniques described in this Section. An acceptable OITL rating derived as prescribed in this section will be required prior to approval of building plans. The acoustical professional is responsible for providing OITL ratings for all façade elements, that were determined in accordance with either ASIM E 90 (current revision at time of plans submittal N) or ASIM E 966 (current revision at time of plans submittal).

1. Noise level reduction requirements. All structures shall be designed and constructed so that the exterior shell of the structure (windows closed) provides an OITL rating of 25 decibels or higher.
2. Design calculations. The OITL rating shall be calculated for each room having an exterior façade element (basements are explicitly excluded from rooms requiring calculation), using the composite TL calculation procedure outlined below. The room having the lowest numerical OITL rating will determine if the building meets the minimum requirements. The construction required for this room shall then be applied to the entire building structure; that is the window and door TL ratings shall be applied to all windows in the building, the wall construction shall be applied to all exterior walls in the building, and the roof/ceiling construction shall be applied to all ceiling areas with exterior areas.
3. In some instances, rooms may not have distinct separation lines; i.e., a kitchen adjacent to a family room. For these cases, when the opening between the rooms is at least 50 percent of the area of the separation between the rooms (opening plus wall area) then the rooms may be combined into one room.

4. The calculations to determine the OITL rating must be performed by an acoustical professional.

5. Composite transmission loss values used in the OITL rating calculation are determined as follows. The transmission coefficient (T) of a façade element is the ratio of the sound power transmitted through the façade element per unit area to the sound power incident on the façade element per unit area. Transmission loss (TL) is the expression of the transmission coefficient on a decibel scale. The two quantities are related by

   $TL = 10 \text{ Log10 } (1 / \tau)$

   $T = 10\text{-}TL/10$

   A transmission coefficient of zero, T = 0, means that none of the incident sound energy passed through the partition; i.e. the transmission loss is infinity great. A transmission coefficient of one, T = 1, means that all of the incident sound energy passed through the partition; i.e. the transmission loss is zero. A TL of zero applied to an open window or door.

   The sound energy passing through each component (façade element) of a multi-element partition depends on the area and transmission loss of each element. The equation governing this process is

   $Atotal\ Ttotal = A1T1 + A2T2 + A3T3 + A4T4 + \cdots$

   Where:

   A1 and T1 represent the area and transmission coefficient of the first element (for example a wall),

   A2 and T2 represent the area and transmission coefficient of the second element (for example a window),

   A3 and T3 represent the area and transmission coefficient of the third element (for example a door),

   A4 and T4 represent the area and transmission coefficient of the fourth element (for example a ceiling/roof assembly) and so on.

   The quantities ATOTAL and TTOTAL are for the composite multi-element partition. The transmission coefficient for the composite multi-element partition is then represented as $Ttotal = A1T1 + A2T2 + A3T3 + \cdots / Atotal$

   The TL for the combined multi-element partition calculated $TLtotal = 10 \text{ Log10 } (1 / Ttotal)$

   In order to calculate the OITL rating the TLtotal must be determined for each 1/3-octaveband from 80 to 4000 HZ as described in ASTM E 1332.

6. Construction. All exterior walls, roofs and exposed floors shall be of airtight construction. All non-lap joints shall be grouted or caulked airtight with a non-hardening, non-shrinking sealant installed in accordance with manufacturer's specifications. Any penetrations of exterior walls or roofs by pipes, ducts or conduits shall be sealed airtight as required for non-lap joints. Door and window openings in exterior walls shall be flashed all around with an *approved* vapor barrier and sealed to prevent air

infiltration. All voids at doors and windows caused by shims shall be filled solid with insulation and sealant. Sill sealant shall be used to prevent air infiltration at all base plates of exterior walls. Attic and crawl space vents shall meet specifications given in sections 143.6.2 and 143.6.3.2.

430.5 Plans and specifications. In addition to plans, specifications, and calculations required elsewhere in this code, an application for a building permit subject to this section shall be accompanied by the following:

Design Method	Required information to be shown on permit drawings
I	Plans shall clearly indicate construction as specified in Section 430.3.
II	OITL calculations in accordance with Section 430.4 shall be submitted with the building plans and shall be certified by an acoustical professional.

430.5.1 Details. Plans and specifications shall show in sufficient detail any pertinent data and features of the building and the sound insulation techniques to clearly indicate compliance with the requirements of this section. For prefabricated assemblies, such as windows, pre-hung doors, and fireplaces, submittals and labeling on the assemblies shall clearly indicate the STC and OITC ratings for Method I and OITL ratings for Method II of the assembly, and that the testing was performed in accordance with ASTM E 90 (current revision at time of plans submittal) or ASTM E 966 (current revision at time of plans submittal).

430.6 Building mechanical systems.

430.6.1 HVAC systems. All structures subject to this section shall have an HVAC system with the following features:

1. Gas-fired appliances, including water heaters, shall be enclosed in a room separated from habitable space. Combustion air shall be supplied to the room directly from the outside as prescribed in this code, the Denver Mechanical Code, the Denver Energy Code, and the Denver Fuel Gas Code.
   Exception: Sealed combustion direct vent appliances.
2. Equipment for cooling and ventilation air shall be included as part of the system. Ventilation air shall either be supply or exhaust systems per the requirements of this code, and the Denver Mechanical Code.
3. Systems utilizing supply air for outside air ventilation shall have controls that permit "fan only" operation without activation of the heating or cooling system.
4. Exhaust to the outside. Provisions shall be made to mechanically exhaust kitchen, bathroom and janitor/service areas, so that opening of windows will not be necessary, including the outside air ventilation systems using the exhaust option. Each duct shall be provided with at least two bends such that there is no direct line of sight from inside the structure to the outside and shall contain a solid baffle plate across the exterior termination which will still allow adequate area for proper ventilation.

430.6.2 Fireplaces, crawl spaces, attic vents, gas-fired appliances and other openings.

1. Traditional wood burning fireplaces and solid fuel stoves shall not be installed in residential buildings subject to this section. Gas fireplaces shall be direct vent sealed combustion appliances.
2. Gas logs shall be direct vent sealed combustion appliances.
3. Crawl space vent acoustical baffles are required, unless otherwise *approved* by the *building official*.
4. Attic vent acoustical baffles are required, unless otherwise *approved* by the *building official*.
5. Kitchen ventilation for gas-fired kitchen ranges and kitchen hood ventilation fans shall comply with installation requirements specified in this Code, and the Denver Fuel Gas Code, and the combustion and exhaust venting shall comply with the configuration shown in Section 430.6.3. Any venting not for combustion air intake or exhaust is required to have a downward-sloping exterior hood or an exterior cover with a lightweight damper. Kitchen exhaust to the building exterior shall be through the stove/range/cook top hood, ventilation fan, downdraft ventilation or other *approved* whole kitchen ventilation systems. Electric kitchen ranges will also be allowed and shall comply with installation requirements specified in this code, and the Denver Mechanical Code.
6. Mail chutes, milk chutes, pet doors, whole house fans, and through-wall/window air conditioning units are not allowed.

430.6.3 Acoustical vent baffles design.

1. Kitchen hood vent detail. The exhaust vents required for kitchen hoods shall conform with this code, the Denver Mechanical Code, and the Denver Fuel Gas Code. The intake and exhaust vent ductwork shall have offsets built in, so that there is no line of site between the outside (minus the rain guard) and inlet or discharge to the kitchen hood. The offset shall be a minimum of two times the duct diameter. An acoustical professional may provide an alternative to this requirement in either design method, subject to the review and approval by the *building official*.
2. Roof vent acoustical baffle. Acoustical baffles for roof vents (on surface of roof only) shall conform with this code, and the Denver Mechanical Code, and the schematic vent diagram shown below; side view shown in Section 430.6.3.1. An acoustical professional may provide an alternative to this requirement in either design method, subject to the review and approval by the *building official*.
3. Crawl space vent acoustical baffle. Acoustical baffles for crawl space vents shall conform with this Code, and the Denver Mechanical Code, and the schematic vent diagram shown below; side view shown in Section 430.6.3.2. An acoustic professional may provide an alternative to this requirement in either design method, subject to review and approval by the *building official*.

430.6.3.1 Roof vent acoustical baffle diagram

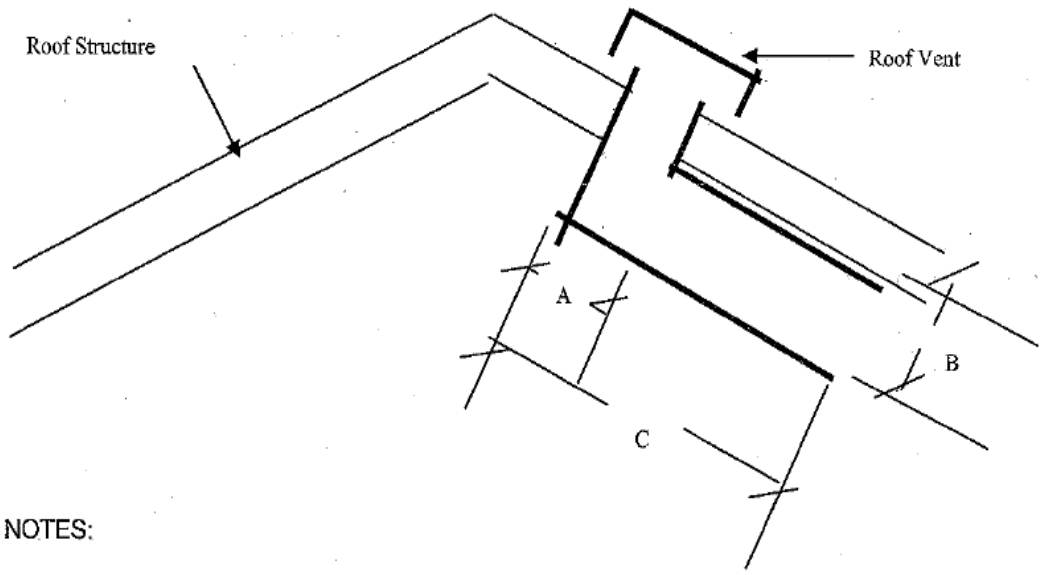

NOTES:

1. Dimension 'A' shall not be less than radius or major dimension of the vent opening.
2. Dimension 'B' shall not be less than dimension 'A'.
3. Dimension 'C' shall be at least 2 ½ times dimension 'B'.
4. Line all inner surface areas of vent with one-inch thick three-pound density fiberglass board or duct liner.

430.6.3.2 Crawl space vent acoustical baffle diagram

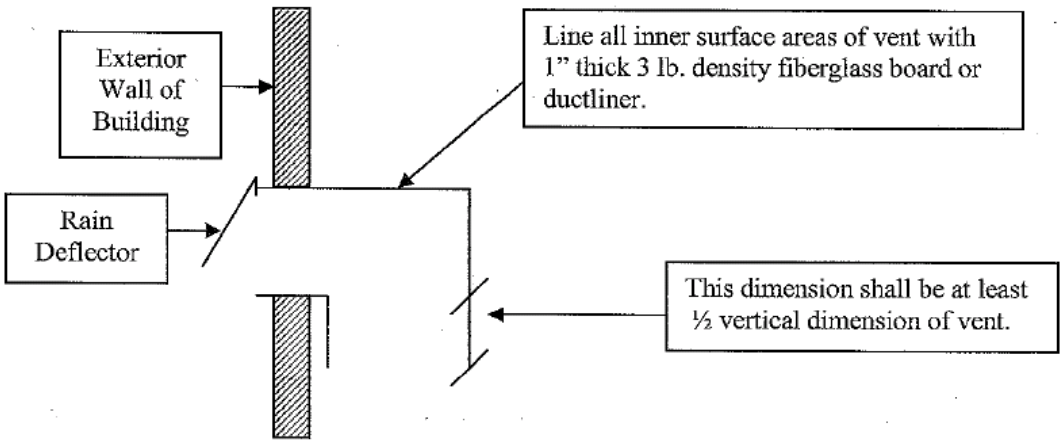

Exhibit A

Denver International Airport Influence Area

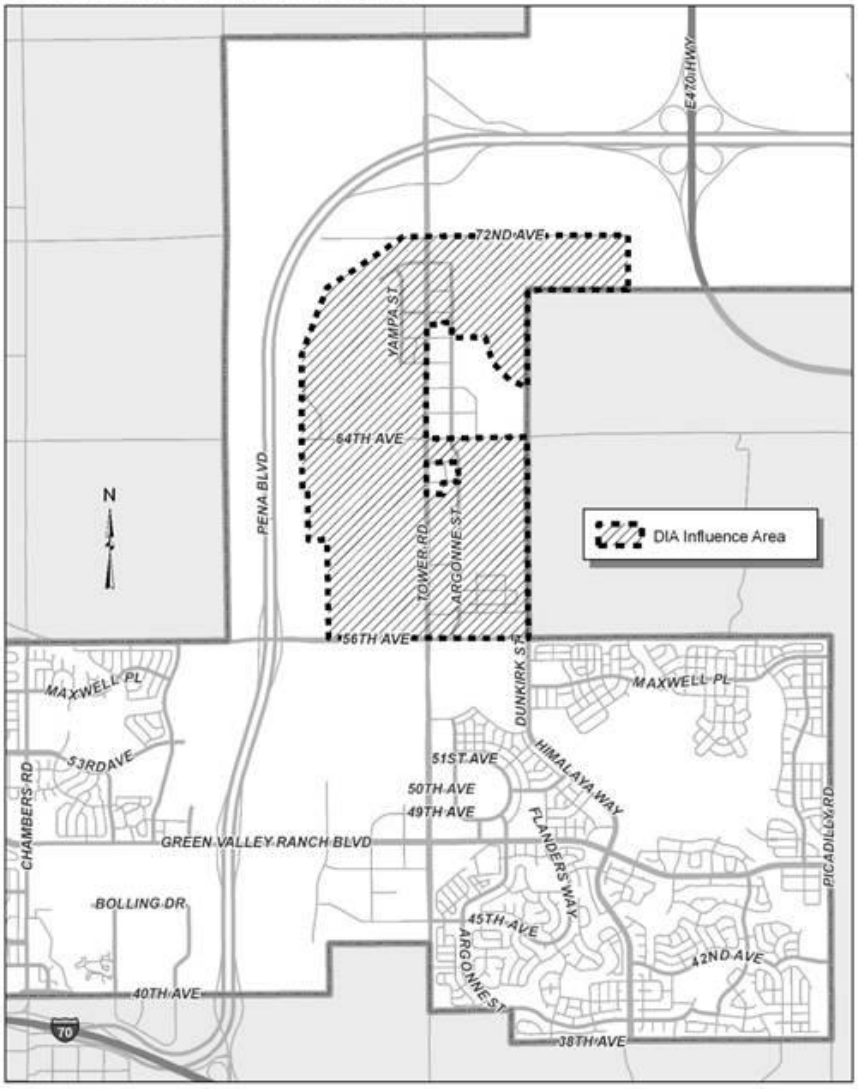

CHAPTER 5
GENERAL BUILDING HEIGHTS AND AREAS

SECTION 503
GENERAL BUILDING HEIGHT AND AREA LIMITATIONS

Section 503.1.4.1 is amended by renumbering Exception 1 and adding Exception 2 as follows:

2. Height of fences or guards as regulated by other provisions of this code.

SECTION 508.5

LIVE/WORK UNITS

Section 508.5.1 Limitations is amended by adding item 5 as follows:

5. The nonresidential area shall be limited to maximum occupant load of 49 persons, as determined by dividing the floor area under consideration by the occupant-per-unit-area factor assigned to the function of space set forth in Table 1004.5.

Section 508.5.2 Occupancies is amended by replacing the section, renumbering Exception 1, and adding Exception 2 as follows:

508.5.2 Occupancies. *Live/work units* shall be classified as a Group R-2 occupancy. Separation requirements found in Sections 420 and 508 shall not apply within the *live/work unit* where the *live/work unit* is in compliance with Section 508.5. Nonresidential uses that would otherwise be classified as either a Group E, F, H, I, or S occupancy shall not be permitted in a *live/work unit*.

Exceptions

2. Group F occupancy custom manufacturing establishments primarily engaged in the on-site production of goods by hand manufacturing shall be permitted in the *live/work unit.* Production shall involve only the use of hand tools or mechanical equipment not exceeding two horsepower per piece of equipment not to exceed a total of six horsepower; or a single kiln not exceeding eight kilowatts or the equivalent in a gas-fired fixture. Spray finishing operations shall be limited to those allowed by Section 2404.9 of the *Denver Fire Code*.

Section 508.5.12 Fire-resistance-rated construction is added as follows:

508.5.12 Fire-resistance-rated construction. The *fire-resistance rating* required by Sections 708 and 711.2.4 between units shall be a minimum of 1-hour construction.

SECTION 510
SPECIAL PROVISIONS

Section 510.2 Horizontal building separation allowance is amended by adding the following sentence to the end of item 1:

The vertical offset shall be constructed as a *fire barrier*.

CHAPTER 6
TYPES OF CONSTRUCTION

SECTION 602
CONSTRUCTION CLASSIFICATION

Section 602.4.2.2.2 Protected area is amended by replacing exceptions 1.1 and 1.2 as follows:

1.1 Unprotected portions of *mass timber* ceilings, including attached beams, shall be permitted and shall be limited to an area less than or equal to 100 percent of the floor area in any *dwelling unit* or *fire area*.

1.2 Unprotected portions of *mass timber* walls, including attached columns, shall be permitted and shall be limited to an area less than or equal to 40 percent of the floor area in any *dwelling unit* or *fire area*

Section 602.4.2.2.4 Separation distance between unprotected mass timber elements is replaced as follows:

602.4.2.2.4 Separation distance between unprotected mass timber elements. In each *dwelling unit* or *fire area*, unprotected portions of *mass timber* walls shall be not less than 15 feet (4572 mm) from unprotected portions of other walls measured horizontally along the floor.

CHAPTER 7
FIRE AND SMOKE PROTECTION FEATURES

SECTION 703
FIRE-RESISTANCE RATINGS AND FIRE TESTS

Section 703.2.3 Approved alternate method is replaced as follows:

703.2.3 Approved alternate method. The *fire resistance* of *building elements*, components or assemblies not complying with Section 703.2.1 or 703.2.2 shall be permitted to be established by an alternative protection method in accordance with Section 104.10 of Article 1, Section 1 of the Denver Building Code.

SECTION 705
EXTERIOR WALLS

Section 705.2 Projections is amended by adding the following sentence to the end of the section:

Balconies inset 4 feet or more shall not be considered projections. Balconies inset up to 4 feet (1219 mm) may be considered projections.

Table 705.8 footnote g is replaced as follows:

g. The area of openings in an *open parking garage* in accordance with Section 406.5 with a *fire separation distance* of 10 feet (3048 mm) or greater shall not be limited

Section 705.8.1 Allowable area of openings is replaced as follows (exceptions remain):

705.8.1 Allowable area of openings. The maximum area of unprotected and protected openings permitted in an *exterior wall* in any *story* of a building shall not exceed the percentages specified in Table 705.8 based on *fire separation distance* of each individual *story*, as measured from the building face within the height of each individual *story* that is closest to the line used to determine *fire separation distance*. The provisions of this section are applicable to the exterior openings with or without windows, duct openings and air transfer openings.

SECTION 707
FIRE BARRIERS

Section 707.5 Continuity is amended by replacing Exception 3 as follows:

Exceptions:

3. An *exit passageway* enclosure required by Section 1024.3 that does not extend to the underside of the floor or roof sheathing, slab or deck above shall be enclosed at the top with construction of the same *fire-resistance rating* as required for the *exit passageway.*

Section 707.6 Openings is amended by adding Exceptions 6 and 7 as follows:

Exceptions:

6. Openings shall not be limited to an aggregate width of 25 percent of the length of the wall where the opening serves a *shaft enclosure* in accordance with Section 713.
7. Openings shall not be limited to an aggregate width of 25 percent of the length of the wall where opening serves a chute access room in accordance with Section 713.13.3 or a chute discharge room in accordance with Section 713.13.4.

Section 707.9 Voids at intersections is replaced in its entirety as follows:

707.9 Voids at intersections. The voids created at the intersection of a *fire barrier* and a non-fire-resistance-rated roof sheathing, slab or deck or a non-fire-resistance-rated exterior wall assembly shall be filled. An *approved* material or system shall be used to fill the void and shall be securely installed in or on the intersection for its entire length so as not to dislodge, loosen or otherwise impair its ability to accommodate expected building movements and to retard the passage of fire and hot gases.

SECTION 712
VERTICAL OPENINGS

Section 712.1 General is amended by adding the following sentence to the end of the section:

In a building with a smoke control system, unenclosed vertical openings shall comply with Section 909.3.1 of the *Denver Fire Code*.

SECTION 714
PENETRATIONS

Section 714.5.1 Through penetrations is amended by adding Exception 4 as follows:

Exceptions:

4. Through penetration of floors or ramps in open and enclosed parking garages where the area above and the area below the penetrations are parking garages.

SECTION 715
JOINTS AND VOIDS

Section 715.4 Exterior curtain wall/fire-resistance-rated floor intersections is amended by adding an exception as follows:

Exception: Voids at the exterior wall intersection of the floors and ramps in open and enclosed parking garages where the area above and the area below the voids are parking garages.

Section 715.5 Exterior curtain wall/non-fire-resistance-rated floor assembly intersections is amended by adding an exception as follows:

Exception: Voids at the exterior wall intersection of the floors and ramps in open and enclosed parking garages where the area above and the area below the voids are parking garages.

SECTION 717
DUCTS AND AIR TRANSFER OPENINGS

717.5.3 Shaft enclosures is amended by adding the following sentence and deleting Exception 1.3 and Exception 4. and

Ducts penetrating shaft enclosures that are a part of the smoke control system shall conform to Section 909 of the *Denver Fire Code*.

SECTION 720
THERMAL- AND SOUND-INSULATING MATERIALS

Section 720.1.1 Insulation above fire sprinklers is added as follows:

720.1.1 Insulation above fire sprinklers. Flexible non-supporting insulation installed above sprinklers on the underside of floor or roof sheathing shall be secured in place with 20-gauge metal netting with a mesh size not greater than 2 inches by 2 inches (50.8 mm by 50.8 mm).

CHAPTER 8
INTERIOR FINISHES

SECTION 808
ACOUSTICAL CEILING SYSTEMS

Section 808.1.1.3 Drop-out ceiling panels is added as follows:

808.1.1.3 Drop-out ceiling panels. *Drop-out ceiling* panels are prohibited.

Exception: In areas not provided with an *automatic sprinkler system*, listed *drop-out ceiling* panels are permitted when installed in accordance with their listing.

CHAPTER 9
FIRE PROTECTION SYSTEMS

Chapter 9 of the Denver Commercial Building Code is amended by incorporating Chapter 9 of the *Denver Fire Code*, except as follows:

SECTION 901
GENERAL

Section 901 General is retained in its entirety.

CHAPTER 10
MEANS OF EGRESS

SECTION 1003
GENERAL MEANS OF EGRESS

Section 1003.7 Elevators, escalators and moving walks is replaced in its entirety as follows:

1003.7 Elevators, escalators and moving walks. Elevators, escalators and moving walks shall not be used as a component of a required *means of egress* from any other part of the building.

Exceptions:

1. Elevators used as an accessible *means of egress* in accordance with Section 1009.4.
2. Escalators serving fixed guideway transit system platforms in accordance with NFPA 130.

SECTION 1004
OCCUPANT LOAD

Section 1004.5 Areas without fixed seating is replaced in its entirety as follows:

1004.5 Areas without fixed seating. The number of occupants shall be computed at the rate of one occupant per unit of area as described in Table 1004.5. For areas without *fixed seating*, the occupant load shall be not less than that number determined by dividing the floor area under consideration by the *occupant load* factor assigned to the function of the space as set forth in Table 1004.5. Where an intended function is not listed in Table 1004.5, the *building official* and *fire code official* shall establish a function based on a listed function that most nearly resembles the intended function.

Exception: Where *approved* by the *building official* and *fire code official*, the actual number of occupants for whom each occupied space, floor or building is designed, although less than those determined by calculation shall be permitted to be used in the determination of the design occupant load.

Table 1004.5 Maximum Floor Area Allowances Per Occupant is amended by replacing "business areas" and adding footnote c; adding footnote "b" to "Decks", and adding additional requirements for Group F-1 occupancy for plant husbandry operations with artificially introduced CO_2 as follows:

TABLE 1004.5
MAXIMUM FLOOR AREA ALLOWANCES PER OCCUPANT

FUNCTION OF SPACE	OCCUPANT LOAD FACTOR[a]
Business areas Concentrated business use areas	150 gross / 100 net[c] See Section 1004.8
Skating rinks, swimming pools Rink and pool Decks	 50 gross 15[b] gross
Flowering or vegetative room (F-1 occupancy for marijuana plant husbandry)	300 net (agricultural use)
Work areas (F-1 occupancy for plant husbandry with artificially introduced CO_2	100 gross

b. For swimming pools that only serve Group R-2 and R-3 Occupancies, the occupant load factor for the pool deck shall be 30 gross square feet.
c. Use gross area or net area occupant load factor that results in the greatest *occupant load.*

Section 1004.9 Posting of occupant load is replaced in its entirety as follows:

1004.9 Posting of occupant load. Every room or space that is an assembly occupancy, and within a bar, tavern, or similar area that is an assembly function with an occupant load of 40 or more, shall have the occupant load of the room or space posted in a conspicuous space, near the main exit or exit access doorway from the room or space, for the intended configurations. Posted signs shall be of an approved legible permanent design and shall be maintained by the owner or the owner's authorized agent.

SECTION 1005
MEANS OF EGRESS SIZING

Section 1005.3.1 Stairways is amended by replacing Exception 1 in its entirety and adding Exception 4:

Exceptions:

1. For other than Group H and I-2 occupancies, the capacity, in inches, of means of egress stairways shall be calculated by multiplying the occupant load served by such stairways by a means of egress capacity factor of 0.25 inch (6.4 mm) per occupant in buildings equipped throughout with an *automatic sprinkler system* installed in accordance with Section 903.3.1.1 or 903.3.1.2 of the *Denver Fire Code* and an emergency voice/alarm communication system in accordance with Section 907.5.2.2 of the *Denver Fire Code*.

4. The capacity, in inches, of the *means of egress stairways* serving Group H occupancies shall be calculated by multiplying the *occupant load* served by such *stairways* by a *means of egress* capacity factor of 0.7 inches (17.8 mm) per occupant.

Section 1005.3.2 Other egress components is amended by replacing Exception 1 in its entirety and adding Exception 4:

Exceptions:

1. For other than Group H and I-2 occupancies, the capacity, in inches, of means of egress components other than stairways shall be calculated by multiplying the occupant load served by such component by a means of egress capacity factor of 0.175 inch (4.5 mm) per occupant in buildings equipped throughout with an *automatic sprinkler system* installed in accordance with Section 903.3.1.1 or 903.3.1.2 of the *Denver Fire Code* and an emergency voice/alarm communication system in accordance with Section 907.5.2.2 of the *Denver Fire Code*.

4. The capacity, in inches, of the *means of egress* components other than *stairways* serving Group H occupancies shall be calculated by multiplying the *occupant load* served by such components by a *means of egress* capacity factor of 0.4 inches (10.2 mm) per occupant.

SECTION 1006
NUMBER OF EXITS AND EXIT ACCESS DOORWAYS

Section 1006.3 Egress from stories or occupied roofs is replaced as follows (subsections remain):

1006.3 Egress from stories or occupied roofs. All spaces located on a *story* or occupied roof shall have access to the required number of separate and distinct *exits* or access to *exits* based on the aggregate *occupant load* served in accordance with this section.

SECTION 1008
MEANS OF EGRESS ILLUMINATION

Section 1008.3.3 Rooms and spaces is amended by adding item 6 as follows:

6. Elevator landings serving *accessible means of egress* elevators.

Section 1008.3.4 Duration is amended by adding the following Exception:

Exception. The *means of egress* illumination at elevator landings serving an *accessible means of egress* elevator shall be provided with emergency powered illumination for a duration of not less than 2 hours.

SECTION 1009
ACCESSIBLE MEANS OF EGRESS

[F] Section 1009.4.1 Standby power is amended by replacing the 2nd sentence with the following:

Emergency or standby power shall be provided in accordance with 604 of the *Denver Fire Code*

Section 1009.5 Platform Lifts is amended by changing the reference from "Chapter 27" to "Section 920.8 of *Denver Fire Code*".

Section 1009.8.1 System requirements is replaced in its entirety as follows:

1009.8.1 System requirements. A two-way communication system shall provide two-way voice communication and visual annunciation between call boxes at locations required by Section 1009.8 and a master control station. Call boxes provided in addition to those in required locations shall comply with this Section.

The master control station shall be installed in the *fire command center* where provided. In a building where a *fire command center* is not provided, or where multiple master control stations are proposed, locations shall be as *approved* by the *fire code official*. In buildings with multiple master control stations, required features and functionality shall be provided simultaneously at all of them. In this configuration, the *fire code official* shall designate the overriding master control station that supersedes all additional master control stations and assumes any telephone connection established with a monitoring location or 911.

A call from a call box shall be directed to the master control station. When the master control station is not constantly attended, the call shall be redirected automatically within 30 seconds to an *approved* monitoring location. The call shall be redirected to 911 if the building does not have an *approved* monitoring location or if no one at the monitoring location is capable of answering the call and taking appropriate action. The call shall not be transmitted to an automated answering system. Two-way voice communication shall be established between the call box and a person at the monitoring location capable of taking appropriate action, or 911. Two-way voice communication shall be discontinued only when monitoring-location personnel or emergency personnel terminate the call.

The two-way communication system shall be connected to a source of standby power capable of providing the required functionality for a minimum of four hours when the normal power supply fails. The two-way communication system shall be monitored for integrity and annunciated in accordance with NFPA 72, 10.18.2.

The following features shall be provided at the call boxes:

1. The controls shall be accessible and usable by people with disabilities. Clearance, location, protrusion, labeling, signage, and operability of the equipment and user interface shall comply with ANSI A117.1.
2. A push button to activate two-way communication shall be provided.
3. An ANSI A117.1-compliant protective cover shall be provided over the face of the call box, including the button. The cover shall be openable with one hand and shall not require tight grasping, pinching, or twisting of the wrist. Upon releasing the cover from its closed position, it shall hold itself in the open position to provide clear access to activate the button with the same hand. The maximum force required to activate operable parts shall not exceed 5 lbs. (22.2 N). In the open position, the cover shall not encroach on reach ranges required by ANSI A117.1. When the cover is in the open position, the button shall be clearly visible.

4. **"EMERGENCY EVACUATION ASSISTANCE"** shall be permanently identified on the protective cover in blue lettering with white contrast or white lettering with blue contrast. The lettering shall be clearly visible, 5/8" (16 mm) minimum height, and ANSI A117.1 compliant.

5. When the button is pushed, the two-way communication system shall initiate a call for assistance at the master control station. A visual indication shall be provided on or adjacent to the button, and an audible signal shall be provided to acknowledge successful initiation

6. After the acknowledgement signals are sent, two-way communication shall be established without any intentional delay or required intervention by the person initiating the call. Audible and visual indications shall be provided on the call box to acknowledge two-way voice communication has been established. Visual indication shall be deactivated only when the two-way voice communication is terminated.

The following features shall be provided at the master station(s):

1. Identification of the master control station as the emergency evacuation system master control station;

2. Text operating instruction on the use of the systems;

3. The ability to receive and answer calls from all call boxes in the building served by the master control station;

4. The ability to identify the specific location (story and room) of every call box actively engaged in a call with the master control station;

5. The ability to initiate a call to a call box; and

6. The ability to simultaneously put multiple calls on hold without terminating any.

Section 1009.8.2 Directions is replaced in its entirety as follows:

1009.8.2 Directions. Directions for the use of the two-way communication system, instructions for summoning assistance via the two-way communication system and written identification of the location shall be posted adjacent to each call box. Clearly visible ANSI A117.1 compliant signage shall be posted as follows:

1. Text operating instructions on the use of the system shall be posted on or adjacent to the call box;

2. Tactile operating instructions shall be incorporated on or adjacent to the buttons and shall be readily accessible to touch once the cover is in the open position;

3. The written location of the call box shall be posted adjacent to the call box;

4. The statement "**PUSH FOR EMERGENCY EVACUATION ASSISTANCE"** shall be permanently identified on the call box adjacent to the push buttons;

5. The statement **"PERSONS ABLE TO USE THE EXIT STAIRWAY DO SO AS SOON AS POSSIBLE, UNLESS THEY ARE ASSISTING OTHERS"** shall be posted on or adjacent to the call box;

6. The statement **"AFTER ACTIVATING THE COMMUNICATION SYSTEM, WAIT HERE FOR ASSISTANCE"** shall be posted on or adjacent to the call box;

7. Directions to all other means of egress shall be posted near the call box;

8. Information on planned availability of assistance in the use of stairs or supervised operation of elevators and how to summon such assistance shall be posted on or adjacent to call box within the stair enclosure.
9. Other information required by the *building official* or *fire code official* or the design professional of record.
10. Directions for use shall be as shown in Figure 1009.8.2.

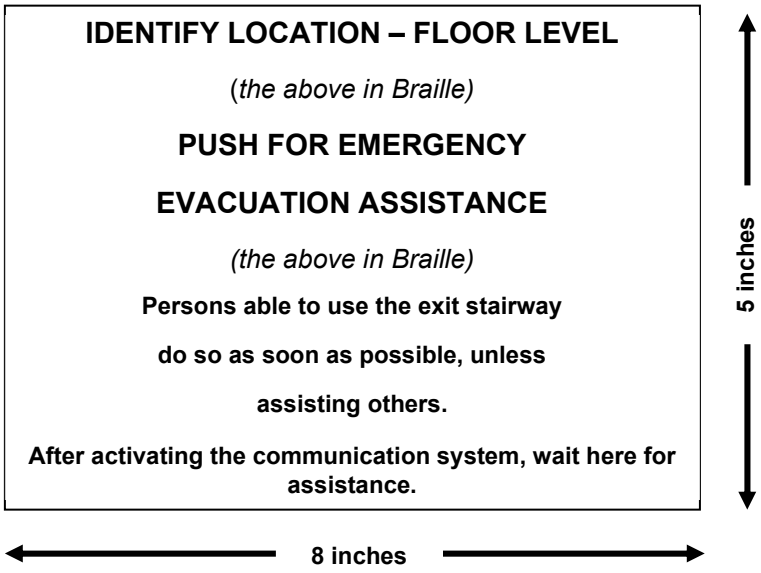

Figure 1009.8.2

Section 1009.8.3 Problematic systems is added as follows:

1009.8.3 Problematic systems. Existing two-way communication systems shall be modified to comply with Section 1009.8.1 when two or more nuisance calls are placed within a twenty-four-hour period, three or more within a thirty-day period, or ten or more within a twelve-month period. In additional a fine is permitted to be imposed in all cases where the number of nuisance calls exceeds ten within a twelve-month period.

The property owner shall be responsible for maintaining the two-way communication systems required by this code to provide, at a minimum, the level of reliability and performance as required when originally permitted. Malfunctioning two-way communication systems shall be immediately repaired or replaced. Legal action is permitted to be imposed for two-way communication systems found to be malfunctioning. Permits shall be obtained in accordance with Section 105 of the *Denver Fire Code* for all work on two-way communication systems required by this code.

SECTION 1010
DOORS, GATES AND TURNSTILES

Section 1010.2.1 Unlatching is amended by adding Exception 5.

Exceptions:

5. Notwithstanding the last sentence of Section 1010.2.2, accessible thumb turn locks are allowed on manually operated sliding doors serving offices with an occupant load of 10 or less. For the purposes of this exception, accessible shall mean a lever with a minimum dimension from the pivot of at least 2 5/8-inches (60 mm) that can be operated with a closed fist by applying no more than 5 pounds (22.2 N) of force to the end of the lever.

Section 1010.2.2 Hardware is modified by adding the following after the end of the last sentence:

1010.2.2 Hardware.

Thumb turn locks are prohibited.

Section 1010.2.5 Bolt locks is replaced as follows (exceptions remain):

1010.2.5 Bolt locks. Manually or electrically operated flush bolts or surface bolts are prohibited.

Section 1010.2.7 Stairway doors is amended by replacing Exception 3 as follows:

Exceptions:

3. *Stairway exit* doors are permitted to be locked from the side opposite the egress side, provided that they are openable from the egress side and capable of being unlocked simultaneously without unlatching upon an *electric locks – master switch* signal from the *fire command center*, if present, or from a single location at the fire alarm control panel inside the main entrance to the building. When located in a non-secure area, a two-position, key operated switch may be used when a matching key is located in the building's Key Lock Box.

Section 1010.2.9 Panic and fire exit hardware is amended by replacing Exception 2 as follows:

Exceptions:

2. Doors provided with *panic hardware* or *fire exit hardware* and serving a Group A or E occupancy may be electrically locked in accordance with Section 1010.2.11.**Section 1010.2.11 Door hardware release of electrically locked egress doors is amended by adding item 7:**

7. *Shear-type magnetic locks* shall not be permitted.

Section 1010.2.12 Sensor release of electrically locked egress doors is amended by adding item 9:

9. *Shear-type magnetic locks* shall not be permitted.

Section 1010.2.16 Secured elevator lobby is added as follows:

1010.2.16 Secured elevator lobby. When all provisions of Section 1010.2.16 have been satisfied, elevator lobbies may be secured to prevent access from the elevator lobby into a tenant space.

1010.2.16.1 Use of secured elevator lobbies. Secured elevator lobbies are intended to provide a transitional area where building occupants can await the arrival of an elevator car or depart from an elevator car. It is not intended to be an area where building occupants can work. A secured elevator lobby cannot contain other spaces that are considered normally occupied such as restrooms, reception areas or waiting areas.

1010.16.2 Exit path blockage. Securing of the lobby cannot result in the blockage of exit paths from normally occupied areas. A secured lobby cannot interrupt the exit path circulation.

1010.2.16.3 Dead-end corridors. Securing of the lobby cannot result in dead-end exit corridors with lengths that exceed the provisions of Section 1020.4.

1010.2.16.4 Restroom facility access. Securing of the lobby cannot result in elimination of access to required restroom facilities from normally occupied areas. Each individual tenant shall have access at all times to required toilet facilities.

1010.2.16.5 Electric load-center access. Securing of the lobby cannot eliminate the access required by the *NEC* to electrical overload protection or disconnect equipment. Each tenant shall have the access required by the *NEC*.

1010.2.16.6 Delayed Egress. Delayed egress is permitted under this section in accordance with 1010.2.13.

1010.2.16.7 Exit stairway access. Elevator lobbies shall have at least one means of egress complying with Chapter 10 and other provisions within this code.

Exception: Access to an exit stairway is not required provided all the following conditions are met:

1. **Fire System Requirements.** The building shall be alarmed and/or protected in accordance with one of the items below:

    1.1. Equipped with a *fire alarm system* and shall be fully detected.

    1.2. Fully sprinklered and have manual fire alarm boxes (pull stations) installed throughout the building.

    1.3. Equipped with the life-safety features prescribed under Section 403.

2. **Electric Locks.** All doors connecting the secured lobby with normally occupied areas or with corridors leading to the exit stairway may only be secured with a *fail-safe* electric lock. The lock shall unlock when the fire alarm is activated, upon loss of power or fire flow.

3. **Emergency Communications.** One of the following emergency communication devices shall be provided in the elevator lobby:

    3.1. A manual fire alarm box shall be installed in a clearly visible location within the elevator lobby and mounted at a height to comply with the reach range provisions of ICC A117.1 Section 308. The location shall be subject to approval by the *FPB*. A manual fire alarm box installed under these requirements shall transmit to a Class I Central Station.

    3.2. An emergency telephone or other *approved* two-way communication device shall be installed in the elevator lobby and mounted in compliance with the reach ranges provisions of ICC A117.1 Section 308. The location shall be *approved* by the *FPB*. The system/device shall transmit to a commercial monitoring service or continuously staffed monitoring service within the building as *approved* by the *building official* and the *FPB*. Upon activation, the communications device shall automatically transmit a location identification message to the monitoring service. A sign in compliance with ICC A117.1 shall be provided at the communication device that states that this is an emergency phone and lists the building address and the floor number of the elevator lobby.

4. **Lighting Requirements**. The elevator lobby shall be illuminated in accordance with Section 1008.

5. **Compatibility with Accessibility Requirements.** All doors into the elevator lobby area from normally occupied areas shall have accessible hardware compatible with the requirements of ICC A117.1 Sections 308 and 404.2.6 on each side of the door.

6. **Elevator Lobby Refuge Areas or Elevator Lobby Area of Rescue Assistance.** When an elevator lobby is used as an area of refuge or area of rescue assistance, all of the following conditions shall be met:

   6.1. Electric Lock Requirements. *Electric locks* shall be designed so that when they are released, the door will remain latched. The lock shall also be connected to the *Electric Locks – Master Switch*.

   6.2. Door and Door Hardware Requirements. All doors opening into the elevator lobby shall be opening fire-protection assemblies as required by Table 716.1(2) for *smoke barriers*. All hardware necessary to maintain the fire rating of the door shall be *listed* and *approved* fire door hardware. All hardware installed on the rated door and frame assembly shall be compatible with the manner in which the door was manufactured and shall not reduce the fire rating of the assembly. Field or other modification of rated doors and frames is prohibited unless *approved* in writing by the agency which *labeled* the fire-rated assembly.

   6.3. Securing Doors Leading into the Elevator Lobby. Doors leading into the lobby from normally occupied areas shall be readily openable from the normally occupied side without the use of a key or special knowledge or effort.

   6.4. Refuge Area or Area of Rescue Assistance Subdivision. A refuge area or area of rescue assistance, which includes the elevator lobby and the corridors that connect the lobby to the exit stairways, shall remain as one open area without restriction of movement within the refuge area or area of rescue assistance.

SECTION 1011 STAIRWAYS

Section 1011.12 Stairway to roof is amended by deleting the Exception.

Section 1011.12.2 Roof access is amended by deleting the Exception.

Section 1011.12.3 Roof hatches is added as follows:

1011.12.3 Roof hatches. All *interior exit stairways and ramps* extending to the uppermost story in buildings four or more stories above grade plane shall be provided with a roof hatch openable to the exterior. The hatch shall be a minimum of 16 square feet (1.5 m^2) in area with a minimum dimension of 2 feet (610 mm).

Exceptions:

1. Pressurized *stairway* enclosures.
2. Enclosures of *interior exit stairways and ramps* that extend to the roof in accordance with Sections 1011.12 and 1011.12.2 and are provided with a penthouse complying with Section 1511.2.
3. Buildings with all roof slopes exceeding 4 units vertical in 12 units horizontal (33-percent slope).

SECTION 1013
EXIT SIGNS

Section 1013.3 Illumination is replaced in its entirety as follows:

1013.3 Illumination. Exit signs shall be electrically- powered and internally illuminated.

Exceptions:

1. Tactile signs required by Section 1013.4 need not be provided with illumination.
2. Edge-illuminated signs are permitted where listed and labeled in accordance with UL 924.

Section 1013.5 Internally illuminated exit signs is replaced in its entirety as follows:

1013.5 Internally illuminated exit signs. Electrically powered exit signs shall be listed and labeled in accordance with UL 924 and shall be installed in accordance with the manufacturer's instructions and Section 1203 of the *Denver Fire Code*. Exit signs shall be illuminated at all times.

Section 1013.5.1 Graphics is added as follows:

1013.5.1 Graphics. Exit signs shall have green lettering on a contrasting field or white lettering on a green field.

Section 1013.6 Externally illuminated exit signs and all subsections are deleted in their entirety.

SECTION 1018
AISLES

Section 1018.5 Aisles in other than assembly spaces and groups B and M is amended by renumbering Exception to Exception 1 and adding Exception 2 as follows:

Exceptions:

2. Aisles in high-piled combustible storage areas shall comply with the applicable provisions of Chapter 32 of the *Denver Fire Code*.

SECTION 1019
EXIT ACCESS STAIRWAYS AND RAMPS

Section 1019.3 Occupancies other than Groups I-2 and I-3 is amended by replacing item 4 as follows:

4. *Exit access stairways* and *ramps* in buildings equipped throughout with an *automatic fire sprinkler system* in accordance with Section 903.3.1.1 of the *Denver Fire Code*, where the area of the vertical openings between stories does not exceed twice the horizontal projected area of the *stairway* or *ramp* and the opening is protected by a draft curtain and closely spaced sprinklers in accordance with NFPA 13. This provision is limited to openings that do not connect more than four stories.

SECTION 1020
CORRIDORS

Section 1020.2 Construction is amended by adding exceptions 6 and 7 as follows:

Exceptions:

6. Fire-resistive construction within single-tenant office spaces is not required for corridor walls and ceilings.
7. Fire-resistive construction is not required for corridor walls and ceilings when serving a conference or assembly room having an occupant load of less than 100 located within a single-tenant office space.

SECTION 1021
EGRESS BALCONIES

Section 1021.4 Location is deleted in its entirety and replaced by the following:

1021.4 Location. Exterior egress balconies shall have a minimum distance of 10 feet (3048 mm) measured at right angles from the exterior edge of the egress balcony to the following:

1. Adjacent *lot lines*. Where the egress balcony is located adjacent to a public street, alley, or public way, the distance of 10 feet (3048 mm) shall be measured to the opposite edge of such public street, alley, or public way.
2. Other buildings or other portions of the same building on the same lot, unless opening limitations and protection are provided as defined below:
    - 2.1. Openings in exterior walls of adjacent buildings or other portions of the same building on the same lot located less than 3 feet (914 mm) from the exterior egress balcony are not permitted.
    - 2.2. Openings in exterior walls of adjacent buildings or other portions of the same building on the same lot shall be protected by not less than 45-minute opening protection assemblies when located between 3 feet (914 mm) and 10 feet (3048 mm) from the exterior egress balcony. Sprinkler protection shall not be substituted for 45-minute opening protection assemblies.
    - 2.3. Area of exterior openings in the adjacent buildings or portions of the same building on the same lot shall not exceed the opening area limits specified in Table 705.8 for that portion of the exterior wall adjacent to and at right angle to the exterior egress balcony.
    - 2.4. Exterior walls of the adjacent building shall have a minimum one-hour *fire-resistance rating* and not less than the *fire-resistance rating* required in Table 602.

SECTION 1023
INTERIOR EXIT STAIRWAYS AND RAMPS

Section 1023.9.2 Door operation identification is added as follows:

1023.9.2 Door operation identification. At locked *stairway* doors, identification required by Section 1023.9 shall also identify the door operation as follows:

1. All doors that are locked for more than 5 consecutive floors shall have a sign that reads: **THIS DOOR IS LOCKED. EMERGENCY PHONES ARE LOCATED ON FLOORS ____ AND _____.**

2. All doors that are locked for 5 consecutive floors or less shall have a sign that reads: **THIS DOOR IS LOCKED. FOR THE NEXT UNLOCKED DOOR GO DOWN TO FLOOR __OR UP TO FLOOR__.**

Section 1023.9.3 Emergency phone identification is added as follows:

1023.9.3. Emergency phone identification. Emergency phones in exit stairways shall have a sign stating, "Emergency Phone," the building address and the floor and stair location of the phone. Signage shall be in accordance with Section 1023.9.1 and ICC A117.1 Sections 703 and 704.

Section 1023.12.2 Enclosure access is deleted in its entirety.

SECTION 1025
LUMINOUS EGRESS PATH MARKINGS

Section 1025.1 General is replaced in its entirety as follows:

1025.1 General. *Approved* luminous egress path markings delineating the exit path shall be provided in *high-rise buildings* of Group A, B, E, I, M, or R-1 occupancies in accordance with Sections 1025.1 through 1025.5.

Exceptions:

1. Luminous egress path markings shall not be required on the *level of exit discharge* in lobbies that serve as part of the exit path in accordance with Section 1028.1, Exception 1.
2. Luminous egress path markings shall not be required where illumination level under emergency power is provided in accordance with Section 1008.3.5 and the power supply to the means of egress illumination within interior exit enclosures, interior exit ramps, and exit passageways is powered by all the following:
    - 2.1. Premises' electrical supply,
    - 2.2. Generator electrical supply, and
    - 2.3. Emergency storage battery units at each fixture to provide power for duration of not less than 90 minutes.

SECTION 1027
EXTERIOR EXIT STAIRWAYS AND RAMPS

Section 1027.5 Location is replaced in its entirety as follows:

1027.5 Location. *Exterior exit stairways* and *ramps* shall have a minimum distance of 10 feet (3048 mm) measured at right angles from the exterior edge of the *stairway* or *ramps*, including landings, to:

1. Adjacent *lot lines.* Where *exterior exit stairways* and *exterior exit ramps* are located adjacent to a public street, alley or public way, the distance of 10 feet (3048 mm) shall be measured to the opposite edge of such public street, alley, or public way.
2. Other buildings or other portions of the same building on the same lot, unless opening limitations and protection are provided as defined below:

2.1. Openings in exterior walls of adjacent buildings or other portions of the same building on the same lot located less than 3 feet (914 mm) from the *exterior exit stairways* or *ramps* are not permitted.

2.2. Openings in exterior walls of adjacent buildings or other portions of the same building on the same lot shall be protected by not less than 45-minute opening protection assemblies when located between 3 feet (914 mm) and 10 feet (3048 mm) from the *exterior exit stairway* or *ramp*. Sprinkler protection shall not be considered a substitute to 45-minute opening protection. Exterior walls of the adjacent building shall not be substituted for 45-minute opening protection assemblies.

2.3. Area of exterior openings in the adjacent buildings or portions of the same building on the same lot shall not exceed the opening area limits specified in Table 705.8 for that portion of the exterior wall adjacent to and at right angles to the *exterior exit stairway* or *ramp*.

2.4. Exterior walls of the adjacent building shall have a minimum one-hour *fire-resistance rating* and not less than the *fire-resistance rating* required in Table 602

Exception: *Exterior exit stairways* and *ramps* serving individual *dwelling units* of Group R-3 shall have a minimum *fire separation distance* of 5 feet (1525 mm)

[F] SECTION 1030
ASSEMBLY

[F] Section 1030.15 Seat stability is replaced in its entirety as follows:

1030.15 Seat stability. In a building, room, or space used for assembly purposes, the seats shall be securely fastened to the floor.

Exceptions:

1. Seats are not required to be fastened to the floor in places of assembly or portions thereof:

   1.1. with 100 or fewer seats, and
   1.2. with an actual net area per occupant greater than or equal to 7 square feet (0.65 m^2), and
   1.3. without ramped or tiered floors for seating.

2. Seats are not required to be fastened to the floor in places of assembly or portions thereof:

   2.1. with 100 or fewer seats, and
   2.2. with an actual net area per occupant greater than or equal to 7 square feet (0.65 m^2), and
   2.3. with ramped or tiered floors for seating, and
   2.4. where plans showing seating, tiers and aisles were submitted to, reviewed, and permitted by the *fire code official*.

3. Seats are not required to be fastened to the floor in places of assembly or portions thereof:

   3.1. with more than 100 and fewer than 200 seats, and
   3.2. with an actual net area per occupant greater than or equal to 7 square feet (0.65 m^2), and
   3.3. without ramped or tiered floors for seating, and
   3.4. with seats fastened together in groups of five or more.

4. Seats are not required to be fastened to the floor in places of assembly or portions thereof:

    4.1. with seating at tables, and
    4.2. with an actual net area per occupant greater than or equal to 15 square feet (1.39 m^2), and
    4.3. without ramped or tiered floors for seating.

5. Groups of seats are not required to be fastened to the floor in places of assembly or portions thereof:

    5.1. with 14 or fewer seats per group, and
    5.2. with an actual net area per occupant greater than or equal to 7 square feet (0.65 m^2), and
    5.3. without ramped or tiered floors for seating, and
    5.4. groups are separated from other seating by railings, guards, partial height walls or similar barriers.

6. Seats intended for musicians or other performers and separated by railings, guards, partial height walls or similar barriers shall not be required to be fastened to the floor.

7. Special events permitted in accordance with Section 105.6 of the *Denver Fire Code*. Loose seats, folding chairs or similar seating facilities that are not fixed to the floor shall be securely fastened together in groups of five or more.

8. All accessible and companion seating as required by ICC/ANSI A117.1.

CHAPTER 11
ACCESSIBILITY

SECTION 1101
GENERAL

Section 1101.1 Scope is amended by adding the following sentences to the end of the paragraph:

Where there are seven or more residential dwelling units in a project, the provisions of Colorado Revised Statutes (C.R.S.) Title 9, Article 5, Standards for Accessible Housing, shall be enforced by this code. C.R.S. Title 9, Article 5 as amended, is reproduced in Appendix R of this code for reference.

Section 1101.2 Notice and warning is added as follows:

1101.2 Notice and warning. Although this code enforces the provisions of Title 9, Article 5, C.R.S., as amended, as set out in Section 1101.1 above, this code has not been certified or otherwise conformed by the U.S. Government or State of Colorado to the requirements or the Americans with Disabilities Act ("ADA") the Rehabilitation Act, the HUD Fair Housing Act or any other State of Colorado accessibility laws, including but not limited to the Colorado Anti- Discrimination Act ("CADA").

Therefore, compliance with this code does not assure compliance with Titles II or III of the ADA, the Rehabilitation Act, the HUD Fair Housing Act or any other Federal or State laws, except as provided in Section 1101.1 above, or any regulations or guidelines enacted or promulgated with respect to such laws. The City and County of Denver is not responsible for enforcement of the ADA, Rehabilitation Act, HUD Fair Housing Act or such other Federal or State laws, except as provided in Section 1101.1 above.

Building plans submitted under this code will be reviewed and inspected for compliance with this code and will not_be reviewed or inspected for compliance with the requirements of the ADA, Rehabilitation Act, HUD Fair Housing Act or other Federal or State laws, except as provided in Section 1101.1 above. Therefore, it is the sole responsibility of the developer or building owner to have their plans or facilities independently evaluated by knowledgeable professionals in order to comply with the applicable requirements of the above-listed laws.

Any accessibility related modification to a building shall require a building permit.

SECTION 1105
ACCESSIBLE ENTRANCES

Section 1105.1.1 Automatic doors is amended by adding the following sentence to the end of the section:

For the purpose of determining power-operated door requirements, a tenant space with its own exterior *public entrance* shall be considered a separate facility and building.

SECTION 1107
MOTOR-VEHICLE-RELATED FACILITIES

The following amendments to Section 1107 apply to any building permit construction drawing application designed in accordance with the 2022 Denver Building Code and submitted to the Agency before February 1, 2024.

Section 1107.2 Electrical vehicle charging stations is amended by expanding the scope and deleting the Exception.

1107.2 Electrical vehicle charging stations. Electrical vehicle charging stations shall comply with Sections 1107.2.1 through 1107.2.3.

Section 1107.2.1 Number of accessible vehicle spaces is deleted in its entirety and replaced with the following:

1107.2.1 Number of accessible vehicle spaces. Not less than 5 percent of vehicle spaces on the site served by an *EVSE Installed Space*, but not fewer than one, shall be accessible.

Section 1107.2.3 Features of accessible electrical vehicle charging spaces is added as follows:

1107.2.3 Features of accessible electrical vehicle charging spaces. The features of the accessible vehicle spaces and equipment shall comply with ICC A117.1 Sections 502.3 through 502.5, and Section 502.11, except that EVSE is permitted to be located at the end of the access aisle opposite the drive aisle. Except as required by 1112.4 (8), signage or markings identified by the International Symbol of Accessibility reserving the vehicle charging space(s) for those with a disability shall not be provided.

The following amendments to Section 1107 apply to any building permit construction drawing application designed in accordance with the 2022 Denver Building Code and submitted to the Agency on or after February 1, 2024.

Section 1107.2 Electrical vehicle charging stations is amended by expanding the scope and deleting the Exception.

1107.2 Electrical vehicle charging stations. Electrical vehicle charging stations shall comply with Sections 1107.2.1 through 1107.2.3.

Section 1107.2.1 Number of accessible vehicle spaces is deleted in its entirety and replaced with the following:

1107.2.1 Number of accessible vehicle spaces. Not less than 5 percent of vehicle spaces on the site served by an *EVSE Installed Space*, but not fewer than one, shall be accessible.

Section 1107.2.3 Number and features of universal vehicle spaces is added as follows:

1107.2.3 Number and features of universal vehicle spaces.
In addition to the requirements of Section 1107.2.1, all required *EVSE Installed Spaces* that are not accessible shall be designed as *universal vehicle charging stations*. Vehicle space size shall be 132 inches (3350 mm) minimum in width with an adjoining access aisle that is 60 inches (1525 mm) minimum in width. Additionally, the features of universal vehicle spaces and equipment shall comply with ICC A117.1 Sections 502.3 through 502.5, and Section 502.11, except that EVSE is permitted to be located at the end of the access aisle opposite the drive aisle. Except as required by 1112.4 (8), signage or markings identified by the International Symbol of Accessibility reserving the vehicle charging space(s) for those with a disability shall not be provided.

Exception: For parking facilities of more than 100 total parking spaces, or 200 total parking spaces for Group I occupancies, the number of required *universal vehicle charging stations* may be reduced to 10 plus 5% of all required *EVSE Installed Spaces*. The total number of *universal vehicle charging stations* need not exceed 40.

SECTION 1112
SIGNAGE

Section 1112.4 Other Signs is amended by adding item 8 as follows. Items 1-7 remain unchanged.

1112.4 Other Signs

Signage indicating special accessibility provisions shall be provided as shown.

8. All accessible electrical vehicle spaces shall be marked with "Use Last" signage equivalent to that in recommendations published by the U.S. Access Board.

Exception: Where only one accessible electrical vehicle space is provided and no *universal vehicle charging stations* are provided, "Use Last" signage shall not be provided.

CHAPTER 15
ROOF ASSEMBLIES AND ROOFTOP STRUCTURES

SECTION 1503
WEATHER PROTECTION

Section 1503.2.2 Mechanical equipment on roof is added as follows:

1503.2.2 Mechanical equipment on roof. Mechanical equipment placed or reset on roofing shall be supported on minimum 8-inch (203-mm) curbs, platforms, or legs bearing on the decking and made watertight. The 8-inch (203-mm) raised height shall be measured from the top of the installed roofing assembly to the top of the curbs, platforms, or legs.

Exception: Individual equipment units with a weight of 400 pounds (181 kg) or less may be supported on 8-inch legs (203-mm) bearing on the roof membrane if isolation bearing pads, or *approved* equivalent isolation methods, are provided between the bearing points and the roof and the roof warranty is not affected by the installation of the units on the roof membrane. All methods must be meet manufacturers requirements and recommendations for the application being proposed.

Section 1503.6 Exterior wall finishes is added as follows:

1503.6 Exterior wall finishes. Exterior wall finishes on walls extending above the roof shall terminate a minimum of 8 inches (203 mm) above the finished roofing of a flat roof and 2 inches (50.8 mm) above shingle, shake and tile roofs.

SECTION 1505
FIRE CLASSIFICATION

Section 1505.10 Landscaped roofs is replaced in its entirety as follows:

1505.10 Landscaped roofs. Landscaped roofs shall comply with Sections 1505.1 and 1507.15 and shall be installed in accordance with ANSI/SPRI VF-1 and the administrative and design requirements for vegetated roofs in the Department of Community Planning and Development and Department of Public Health and Environment Rules Governing Green Buildings.

SECTION 1507
REQUIREMENTS FOR ROOF COVERINGS

Section 1507.6.2 Deck slope is replaced in its entirety as follows:

1507.6.2 Deck slope. Mineral surfaced rolled roofing (90 lbs.) shall not be applied on roof slopes below two units vertical in twelve units horizontal (17-percent slope).

Exception: Detached garages, patios and carports open on three sides may have a slope of one unit vertical in twelve units horizontal.

Section 1507.10.3 Flashing for interior roof drains is added as follows:

1507.10.3 Flashing for interior roof drains. Flashing for interior roof drains shall be one of the following:

A minimum of 2 x 2 feet (610 mm x 610 mm), 4-pound lead sheet or lead-copper coated sheet, set on completed felts in flashing cement.

The metal shall be turned a minimum of ½ inch (12.7 mm) into a drain sump and plied with 2 plies of type 4 felt or modified bitumen membrane of sufficient dimension to extend a minimum of 6 inches (152 mm) past metal sheet.

A 2-component drain system. The membrane flashing shall be polyvinylchloride sheet measuring 22 inches (559 mm) in length and factory attached to the underside of the strainer flange. The membrane flashing shall be applied on top of the completed felt and shall extend a minimum of 6 inches (152 mm) from the outside diameter of the drain throat, shall be set into hot asphalt or *approved* sealants and plied in with 2 plies of type 4 felt.

Drain details for single-ply systems shall be per manufacturers' specifications.

Section 1507.10.4 Flashing – new built-up roof covering is added as follows:

1507.10.4 Flashing – new built-up roof covering. Flashing shall be installed on all vertical walls and curbs in accordance with the manufacturers' specifications or as follows:

1. All flashing surfaces shall be primed.
2. All flashing shall extend at least 8 inches (203 mm), but not more than 12 inches (305 mm), up all vertical surfaces and at least 4 inches (102 mm) out from the base of the cant or at intervals specified by manufacturer.
3. The top edges of the flashing shall be fastened at 3-inch (76-mm) intervals and sealed with plastic cement.
4. All vertical walls and projections shall be counter-flashed with a 2-piece metal system installed watertight.
5. Nailing strips shall be provided on vertical walls, drips in edge and curbs which will not accept conventional nailing.

Section 1507.18 Hot-applied, reinforced rubberized asphalt roofing is added as follows:

1507.18 Hot-applied, reinforced rubberized asphalt roofing. The installation of hot-applied reinforced rubberized asphalt roofing shall comply with the provisions of this section.

1507.18.1 Slope. Hot-applied, reinforced rubberized asphalt roof membranes shall have a design slope of not less than one-fourth unit vertical in 12 units horizontal (2-percent slope) for drainage.

Exception: Areas of roofs used for occupied roofs, *vegetative roofs*, roof gardens or other similar purposes, shall not be required to have a design slope provided a permanent electrical conductance breach detection method for testing the membrane is installed in addition to a drainage mat.

1507.18.2 Material standards. Hot-applied, reinforced rubberized asphalt roofing shall be one-part, hot-applied, rubberized asphalt and comply with CAN/CGSB-37.50-M89.

1507.18.3 Protected membrane ballasted low-slope roofs. If installed with a slope of less than one-fourth unit vertical in 12 units horizontal (2-percent slope), hot-applied, reinforced rubberized asphalt roofing shall be installed as a protected membrane roof.

1507.18.4 Foam Plastics. Foam plastic insulation shall comply with Section 2603. Foam plastic insulation used with pavers and pedestals shall be in an *approved* roof assembly.

SECTION 1511
ROOFTOP STRUCTURES

Section 1511.2.4 Type of construction is replaced as follows (exceptions remain):

1511.2.4 Type of construction. Penthouses shall be constructed of *building element* materials as required for the type of construction of the building. Penthouse *exterior walls* and roof construction shall have a *fire-resistance rating* as required for the type of construction of the building. Supporting construction of such *exterior walls* and roof construction shall have a *fire-resistance rating* not less than required for the *exterior wall* or roof supported.

SECTION 1512
REROOFING

Section 1512.6 Reroofing of built-up roofs is added as follows:

1512.6 Reroofing of built-up roofs. Pre-roofing inspection shall be made by this Agency for all commercial built-up and single ply systems to verify that the existing roof meets the following conditions:

1. The existing roof deck is structurally sound.
2. The roof drains and roof drainage are sufficient to prevent the ponding of water.
3. The existing roofing is secured to the existing roof deck.
4. The existing insulation is not wet (a 3rd party moisture scan may be required).
5. The fire classification of the roof shall be maintained at the completion of the reroof.

CHAPTER 16
STRUCTURAL DESIGN

SECTION 1602
NOTATIONS

Section 1602.1 Notations is amended by replacing the notation *V* as follows:

V = Basic design wind speeds, miles per hour (mph) determined from Section 1609.3.

SECTION 1607
LIVE LOADS

Section 1607.8.2 Fire truck and emergency vehicles is replaced in its entirety as follows:

1607.8.2 Fire truck and emergency vehicles. Where a structure or portions of a structure are accessed and loaded by fire department access vehicles and other similar emergency vehicles, the structure shall be designed for whichever of the following loads produces the greater *load effects*. The Fire Prevention Division shall determine the area around any building or structure for which fire access and, therefore, the provisions of this section are required. All structural decks with loading per this section shall have permanent all-weather load posting signs indicating gross maximum vehicle load, maximum tandem axles load and maximum single axle load. Signs shall be posted in a conspicuous location at each deck entrance and shall be maintained by the owner at all times.

1. The live loading specified in Table 1607.1 Item 30, Sidewalks, vehicular driveways, and yards, subject to trucking.
2. The live loading specified in Section 1607.8.1.
3. The three live load cases for each of the two fire department vehicle types indicated below. The fire vehicle nominal live loads and geometries are shown in Figures 1607.8.2 (1) and 1607.8.2 (2).

Platform Truck – Figure 1607.8.2 (1)

Basic Load Case:

The front axle load shall be 22,800 pounds (11,400 pounds per tire) with a tire contact area of 12 in. x 13 in. The load on each rear axle shall be 27,000 pounds (13,500 pounds per tire) with a tire contact area of 14 in. x 16 in. Impact and longitudinal forces imparted by the vehicle loads shall be in accordance with the latest edition of AASHTO LRFD Bridge Design Specifications.

Static Load Case A:

A load of 52,000 pounds on one outrigger. The contact area of each outrigger is 26 in. x 31 in. The load is to be located to produce the maximum stress in the member(s) being analyzed when applied according to the geometry of Figure 1607.8.2 (1).

Static Load Case B:

A load of 30,000 pounds on each of two adjacent outriggers (total load is 60,000 pounds). The contact area of each outrigger is 26 in. x 31 in. The load is to be located to produce the maximum stress in the member(s) being analyzed when applied according to the geometry of Figure 1607.8.2 (1).

Ladder Truck – Figure 1607.8.2 (2)

Basic Load Case:

The front axle load shall be 22,800 pounds (11,400 pounds per tire) with a tire contact area of 12 in. x 13 in. The load on the rear axle shall be 31,000 pounds (15,500 pounds per tire) with a tire contact area of 14 in. x 16 in. Impact and longitudinal forces imparted by the vehicle loads shall be in accordance with the latest edition of AASHTO LRFD Bridge Design Specifications.

Static Load Case A:

A load of 29,000 pounds on one outrigger. The contact area of each outrigger is 24 in. x 24 in. The load is to be located to produce the maximum stress in the member(s) being analyzed when applied according to the geometry of Figure 1607.8.2 (2).

Static Load Case B:

A load of 20,000 pounds on each of two adjacent outriggers (total load is 40,000 pounds). The contact area of each outrigger is 24 in. x 24 in. The load is to be located to produce the maximum stress in the member(s) being analyzed when applied according to the geometry of Figure 1607.8.2 (2)

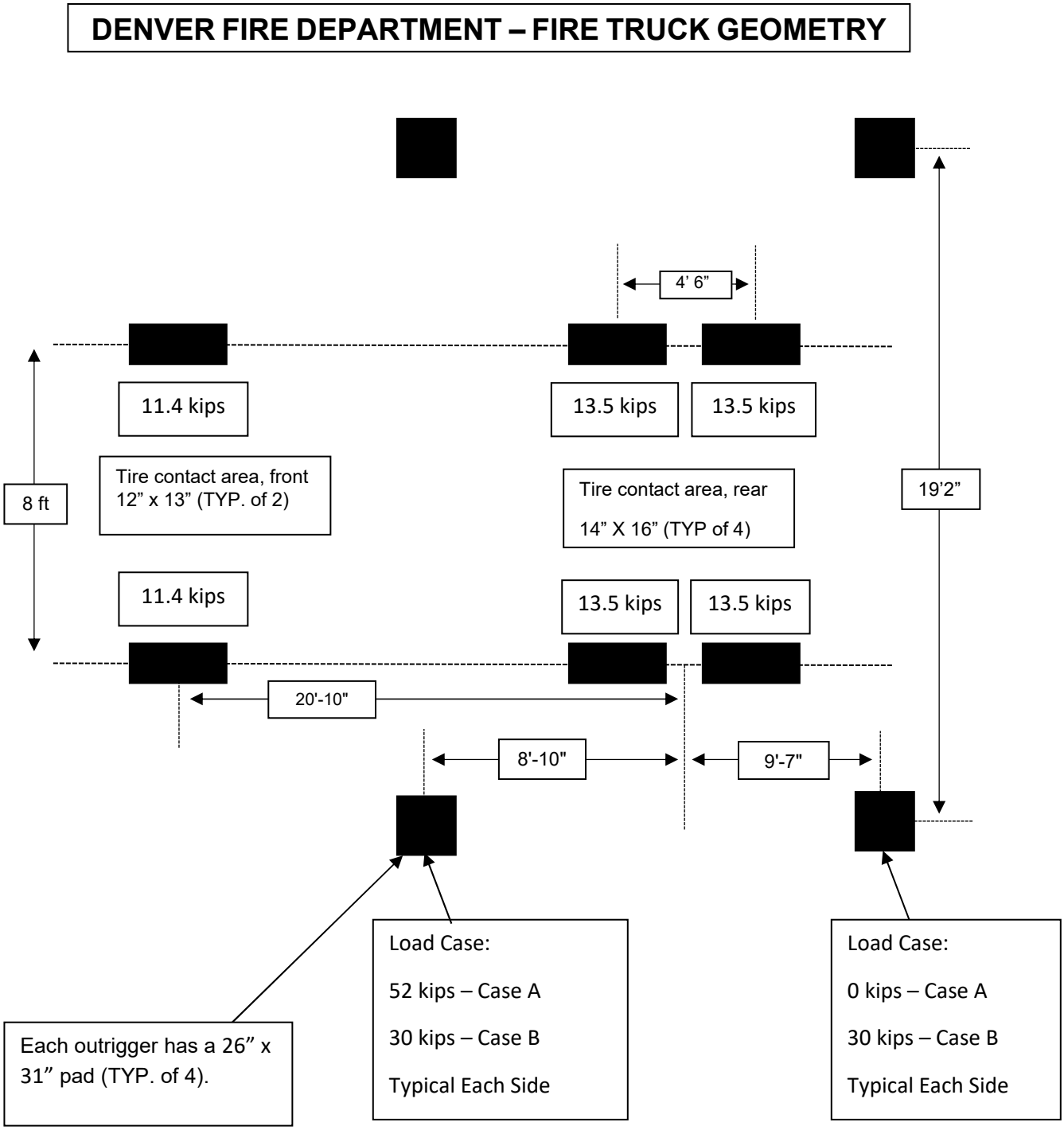

FIGURE 1607.8.2 (1) – PLATFORM TRUCK

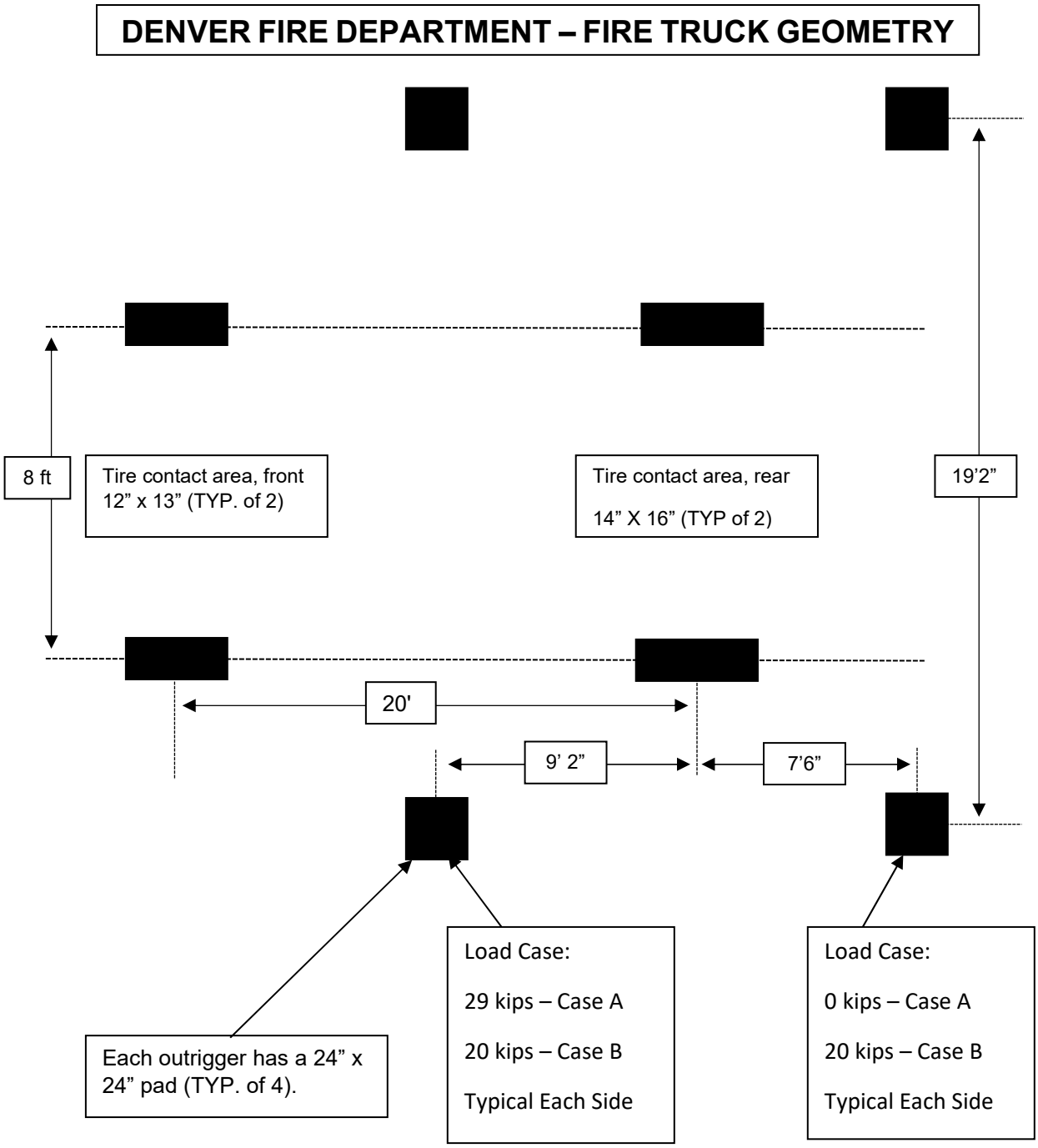

FIGURE 1607.8.2 (2) – LADDER TRUCK

Section 1607.14.4.2 Photovoltaic panels or modules is amended by adding the following sentence:

See Appendix CB of the Denver *Energy Code* for load requirements at solar-ready zones.

SECTION 1608
SNOW LOADS

Section 1608.1 General is replaced in its entirety as follows:

1608.1 General. Design snow loads shall be determined in accordance with Chapter 7 of ASCE 7, as amended in Section 1608.4 of this code, but the design roof load shall not be less than that determined by Section 1607. In addition, design loads on uncovered parking decks shall include the requirements of Section 1608.5 of this code.

Section 1608.2 Ground snow loads is replaced in its entirety as follows:

1608.2 Ground snow loads. Ground snow load, p_g, for use with the procedures of ASCE 7 shall be 35 pounds per square foot.

Section 1608.4 Modifications to ASCE 7 is added as follows:

1608.4 Modifications to ASCE 7. The values for the snow load importance factor, I_s, in Table 1.5-2 of ASCE 7 shall be amended as follows:

Risk Category III.....1.20

Risk Category IV.....1.40

Section 1608.5 Snow load on uncovered parking decks is added as follows:

1608.5 Snow load on uncovered parking decks. Uncovered decks used for parking of passenger vehicles shall be designed for a non-reducible uniformly applied design load of 55 psf. This load includes the combined effects of snow and live loads and need not be combined with other snow loads or other live loads applied to the parking deck.

SECTION 1609
WIND LOADS

Section 1609.1.1 Determination of wind loads is replaced as follows (Exceptions and subordinate sections to remain):

1609.1.1 Determination of wind loads. Wind loads on every building or structure shall be determined in accordance with Chapters 26 to 30 of ASCE 7. The type of opening protection required, and the exposure category for the site is permitted to be determined in accordance with Section 1609 or ASCE 7. The basic design wind speed, V, shall be determined in accordance with Section 1609.3. Wind shall be assumed to come from any horizontal direction and wind pressures shall be assumed to act normal to the surface considered.

(Exceptions 1 through 6 remain)

The wind speeds in Section 1609.3 are basic design wind speeds, V, and shall be converted in accordance with Section 1609.3.1 to allowable stress design wind speeds, V_{asd}, when the provisions of the standards referenced in Exceptions 4 and 5 are used.

Section 1609.3 Basic design wind speed is replaced as follows:

1609.3 Basic design wind speed. The basic design *wind speed, V* for the determination of the wind *loads* shall be in accordance with Table 1609.3. For sites located between the referenced street centerlines, the wind speed shall be interpolated between contours (street centerlines) as described in the report titled *Colorado Front Range Gust Map – ASCE 7-10 Compatible*, dated November 18, 2013.

Table 1609.3 Basic design wind speed, *V* is added as follows:

TABLE 1609.3
BASIC DESIGN WIND SPEED, *V*

Risk Category IBC Table 1604.5	All of Denver east of Centerline Federal Blvd, mph	Centerline Sheridan Blvd to Centerline Federal Blvd, mph	Centerline Kipling St to Centerline Sheridan Blvd, mph
I	105	120	130
II	115	125	140
III	120	135	150
IV	125	140	155

Section 1609.3.1 Wind speed conversion is replaced as follows:

1609.3.1 Wind speed conversion. Where required, the basic design wind speeds of Section 1609.3 shall be converted to *allowable stress design* wind speeds, V_{asd}, using Equation 16-17.

$V_{asd} = V\sqrt{0.6}$ **(Equation 16-17)**

where:

V_{asd} = Allowable stress design wind speed applicable to methods specified in Exceptions 4 and 5 of Section 1609.1.1.

V = Basic design wind speeds determined from Section 1609.3.

SECTION 1612
FLOOD LOADS

Section 1612.3 Establishment of flood hazard areas is replaced as follows (subsections to remain):

1612.3 Establishment of flood hazard areas. To establish *flood hazard areas*, the City and County of Denver adopts "regulatory floodplains" which are defined in the Denver Floodplain Ordinance in Section 56-201 of the Denver Revised Municipal Code as "The land subject to inundation by the base flood as delineated by the Special Flood Hazard Area (SFHA), any other floodplain maps that have been adopted by the manager of Department of Transportation and Infrastructure, and areas that have been removed from the SFHA by a FEMA issued Letter of Map Revision Based on Fill (LOMR-F)." Contact the current Floodplain Manager for the City and County of Denver for the latest revisions to the regulatory floodplains. The adopted regulatory floodplains and supporting data are hereby adopted by reference as *flood hazard areas* and declared to be part of this section.

SECTION 1613
EARTHQUAKE LOADS

Section 1613.1 Scope is amended by adding Exception 6 as follows:

6. Requirements of ASCE 7 Section 13.5.10, Egress stairs and ramps, are not required for structures assigned to *Seismic Design Category* B

Section 1613.2.2 Site class definitions is replaced in its entirety as follows:

1613.2.2 Site class definitions. Based on the site soil properties, the site shall be classified as *Site Class* A, B, C, D, E, or F in accordance with Chapter 20 of ASCE 7. Any assignment of *Site Class* NOT based on average shear wave velocity, measured for the top 100 feet (30 480 mm) of the soil profile, shall comply with the following limitations:

1. No site shall be assigned as Site Class A, B, or C when bedrock has an overburden depth greater than 15 feet, as measured from the top of bedrock to the finished grade.
2. No site shall be assigned as Site Class A or B when bedrock has an overburden depth less than or equal to 15 feet, as measured from the top of bedrock to the finished grade.
3. Where the soil properties are not known in sufficient detail to determine the site class, Site Class D, subjected to the requirement of Section 1613.2.3, shall be used unless the *building official* or geotechnical data determines that Site Class E or F soils are present at the site.

Section 1613.2.5.3 Seismic design category, minimum is added as follows:

1613.2.5.3 Seismic design category, minimum. All buildings and structures in the City and County of Denver shall satisfy the requirements of *Seismic Design Category* B, as a minimum.

CHAPTER 17
SPECIAL INSPECTIONS AND TESTS

SECTION 1704
SPECIAL INSPECTIONS AND TESTS, CONTRACTOR RESPONSIBILITY AND STRUCTURAL OBSERVATION

Section 1704.2 Special inspections and tests is amended by removing reference to Section 105 and replacing with reference to Sections 130 and 131, and by removing reference to Section 110 and replacing with reference to Section 141 of Section 1 of the *Denver Building Code*

Section 1704.2.3 Statement of special inspections is amended by removing reference to Section 107.1 and replacing with reference to Section 133.2.1, item 11 of Section 1 of the *Denver Building Code*.

Section 1704.6 Structural observations is amended by removing reference to Section 110 and replacing with reference to Section 141 of Section 1 of the *Denver Building Code*.

CHAPTER 18
SOILS AND FOUNDATIONS

SECTION 1809
SHALLOW FOUNDATIONS

Section 1809.5 Frost protection is amended by adding the following sentence:

The frost line for the City and County of Denver is 36 inches (915 mm) below the finished grade.

SECTION 1810
DEEP FOUNDATIONS

Section 1810.3.5.2.2 Uncased is replaced in its entirety as follows:

1810.3.5.2.2 Uncased. Cast-in-place or grouted-in-place *deep foundation* elements without a permanent casing shall have a specified diameter of not less than 12 inches (305 mm). The element length shall not exceed 30 times the specified diameter.

Exception: The specified diameter of the element is permitted to be less than 12 inches (305 mm) and/or the length of the element is permitted to exceed 30 times the specified diameter, provided that the design and installation of the deep foundations are under the direct supervision of a *registered design professional* knowledgeable in the field of soil mechanics and deep foundations. The *registered design professional* shall submit a report to the *building official* stating that the elements were installed in compliance with the *approved construction documents*.

CHAPTER 24
GLASS AND GLAZING

SECTION 2405
SLOPED GLAZING AND SKYLIGHTS

Section 2405.6 Skylight fall protection is added.

2405.6 Skylight fall protection. In Group F, M, and S occupancies, fall protection shall be provided meeting minimum requirements of Section 2405.6.1 and provisions of Section 1108 items 1, 2 and 3 of the *Denver Fire Code*.

2405.6.1 Fall protection construction. Fall protection must be capable of withstanding a load of 400 pounds applied perpendicularly at any one square foot areas on the screen or skylight. Covers shall be secured in place to prevent accidental removal or displacement. Fall protection shall not have openings more than six inches in diameter or of flatwork with openings not more than two inches wide with length unrestricted. Manufacturer or supplier shall submit documentation that the screen(s) or skylight(s) supplied comply with the requirements of this section.

Exception: Skylights constructed on 8-inch minimum or taller curbs, or guards complying with OSHA 29 CFR1926.502. Self-Luminous or Reflective signs shall be provided on guards, Section 1108.1 of the *Denver Fire Code*.

CHAPTER 26
PLASTIC

SECTION 2609
LIGHT-TRANSMITTING PLASTIC ROOF PANELS

Section 2609.5 Fall protection is added as follows.

2609.5 Fall protection. Fall protection shall be provided according to Sections 2405.6 and 2405.6.1.

SECTION 2610
LIGHT-TRANSMITTING PLASTIC SKYLIGHT GLAZING

Section 2610.9 Fall protection is added as follows.

2610.9 Fall protection. Fall protection shall be provided according to Sections 2405.6 and 2405.6.1.

CHAPTER 27
ELECTRICAL

SECTION 2701
GENERAL

Section 2701.1 Scope is amended to remove the reference to the *International Property Maintenance Code.*

Section 2701.1.1 Electrical code references is added as follows:

2701.1 Electrical code references. All references in this code to the "NFPA 70" are changed to the "Electrical Code as adopted by the State of Colorado".

Section 2701.2 Service masts is added as follows:

2701.2 Service masts. Where a mast is required to maintain the overhead conductor height required by the *National Electrical Code*, the mast shall be a minimum of 2 inch rigid metal conduit or 2 inch intermediate metal conduit. All masts over 48 inches (1219 mm) in height shall be appropriately guyed to counter stresses from the service drop.

SECTION 2702
EMERGENCY AND STANDBY POWER SYSTEMS

[F] Section 2702.2.2 Elevators and platform lifts is replaced in its entirety as follows:

[F] 2702.2.2 Elevators and platform lifts. Emergency or standby power shall be provided for elevators and platform lifts as required in Sections 1009.4, 1009.5, 3003.1, 3007.8 and 3008.8.

[F] Section 2702.2.11 High-rise buildings is replaced in its entirety as follows:

[F] 2702.2.11 High-rise buildings. Emergency power shall be provided in *high-rise buildings* as required in Sections 403.4.8.

CHAPTER 28
MECHANICAL SYSTEMS

[M] SECTION 2801
GENERAL

Section 2801.1 Scope is amended to remove the reference to the *International Property Maintenance Code*

CHAPTER 29
PLUMBING SYSTEMS

[P] SECTION 2901
GENERAL

Section 2901.1 Scope is amended to remove the reference to the *International Property Maintenance Code.*

[P] SECTION 2902
MINIMUM PLUMBING FACILITIES

[P] Section 2902.1.1 Fixture calculations is amended by replacing Exception 2 and deleting Exception 3 as follows:

Exceptions

2. Calculations of fixtures provided in toilet and bathing rooms identified as all-gender shall be permitted to sum fractional numbers for each sex and then round up to the next whole number. Fixtures shall contribute equally to the number of male and female fixtures required. For occupancies where the required number of female fixtures is more than the required number of male fixtures, the additional fixtures are permitted to be provided in all-gender facilities.

[P] Section 2902.1.2 Single-user toilet facility and bathing room fixtures is replaced in its entirety as follows:

[P] 2902.1.2 Toilet and bathing room fixture designation. Toilet and bathing fixtures shall be located in single-user or multi-user toilet and bathing rooms and shall be identified for use by sex or gender in accordance with Section 2902.1.2.1 and Section 2902.1.2.2.

[P] 2902.1.2.1 Single-user toilet and bathing rooms. A single-user toilet and bathing room shall contain not more than one water closet, one bathtub and one shower. Plumbing fixtures provided in single-user toilet and bathing rooms shall contribute toward the total number of required plumbing fixtures as calculated per Section 2902.1.1 Exception 2. Single-user toilet and bathing rooms, including family or assisted-use toilet and bathing rooms shall be identified for use by all genders. Toilet fixtures shall not be in separate compartments.

Exception: In addition to a single water closet, one child-height water closet and one urinal shall be permitted to be located in a single-user toilet or bathing room. Not more than one water closet provided for each single-user toilet or bathing room shall contribute toward the total number of required plumbing fixtures.

[P] 2902.1.2.2 Multi-user toilet and bathing rooms. Multi-user toilet and bathing rooms with not less than two water closet compartments, or one water closet compartment and one urinal, or two bathing fixtures shall be provided as separate male and female facilities. Plumbing fixtures provided in multi-user toilet and bathing rooms shall contribute toward the total number of required plumbing fixtures for the sex to which they are designated.

Exception: Multi-user toilet rooms complying with Section 2902.8 shall be permitted to be identified for use by all genders. Water closets and lavatories provided in multi-user toilet rooms identified for use by all genders shall contribute toward the total number of required plumbing fixtures as calculated per Section 2902.1.1 Exception 2. Where both separate and all-gender facilities are provided, separate independent multi-user male and female facilities shall be provided.

[P] Section 2902.1.3 Lavatory distribution is replaced as follows:

2902.1.3 Lavatory Distribution. Where two or more toilet rooms are provided, the required number of lavatories shall be distributed proportionally to the required number of water closets. The required lavatories shall be permitted to be located within water closet compartments provided not less than the larger of one-half of the required lavatories or two lavatories shall be located outside of the water closet compartments.

[P] Section 2902.2 Separate facilities and its exception is replaced in its entirety as follows:

[P] 2902.2 Minimum number of facilities. Where plumbing fixtures are required, a minimum of two facilities shall be provided.

Exceptions: The minimum number of two facilities shall not be required for the following:

1. *Dwelling units* and *sleeping units*.
2. Structures or tenant spaces with a total occupant load, including both employees and customers, of 15 or fewer.
3. Mercantile occupancies in which the maximum occupant load is 100 or fewer.
4. Business occupancies in which the maximum occupant load is 25 or fewer.
5. Occupancies in which all-gender multi-user toilet rooms complying with Section 2902.8 are provided.

[P] Section 2902.2.1 Family or assisted-use toilet facilities serving as separate facilities is deleted in its entirety.

[EH] Sections 2902.3.2 "Prohibited toilet room location" shall be amended by adding the following to the last sentence:

Access to toilet rooms shall not be through food preparation areas, food storage areas, or ware washing or utensil storage areas, except for toilet rooms provided exclusively for the use of employees who primarily work in the food preparation area.

[P] Section 2902.3.6 Door locking is replaced in its entirety as follows:

[P] 2902.3.6 Door locking. Door locking of toilet rooms, bathing rooms and toilet compartments shall comply with this section.

[P] 2902.3.6.1 Multi-user toilet and bathing rooms. Where provided, an egress door for the room shall not be lockable from the inside of the room.

[P] 2902.3.6.2 Single-user toilet and bathing rooms. The egress door for the room shall be lockable from the inside of the room for privacy. The privacy lock shall be in accordance with Sections 1010.2.2 and 1010.2.3.

Exceptions:

1. Privacy locking shall not be required in sleeping units or dwelling units.
2. Where *approved* in Group I occupancies, toilet room privacy is not required where care recipients or detainees require observation for clinical or security reasons.

[P] 2902.3.6.3 All-gender multi-user toilet rooms toilet compartment doors. Toilet compartment doors in all-gender multi-user toilet rooms shall have a privacy lock that has an indicator which notifies occupants on the exterior side of the door when the door is secured from the inside of the compartment.

[P] Section 2902.4. Signage is replaced as follows (subsection remains unchanged):

[P] 2902.4 Signage. Required public facilities shall be provided with signs that designate the sex or gender as required by Section 2902.1.2. Signs shall be readily visible and located near the entrance to each toilet facility or bathing room. Signs for accessible toilet and bathing room facilities shall comply with Section 1112.

[EH] Section 2902.7 Service sink location is amended by adding the following:

Service sinks are required on each floor where toilet facilities are provided as defined below:

1. In food service facilities and occupancies,
2. In Group R occupancies that have food, drink, or ice for consumption or handling

[P] Section 2902.8 All-gender multi-user toilet rooms and its subsections are added:

[P] 2902.8 All-gender multi-user toilet rooms. Where all-gender multi-user toilet rooms are provided, they shall be in accordance with this Section.

[P] 2902.8.1 Minimum number of fixtures. All-gender multi-user toilet rooms shall contain not less than six toilet compartments and three lavatories.

Exception: Where a single-user toilet room is clustered at a single location with an all-gender multi-user toilet room, the all-gender multi-user toilet room shall be permitted to contain not less than three toilet compartments and two lavatories.

[P] 2902.8.2 Clearance. Toilet rooms shall be provided with a minimum clearance of not less than 60 inches (1524 mm) between all opposing toilet compartments, walls, and lavatories.

Exception: Circulation areas serving not more than one plumbing fixture.

[P] 2902.8.3 Toilet compartments. Water closets shall each be provided in individual compartments. Compartments shall be permitted to include walls, partitions and doors and shall begin at the floor and extend to the finished ceiling, have no sightlines when the door is in the closed position and have a lockable door in accordance with Section 2902.3.6.3. A urinal shall be permitted only within a water closet compartment; such urinal shall not contribute towards the total number of required plumbing fixtures.

Exceptions:

1. Compartment door undercuts shall be permitted to be not more than 0.5 inches. (13 mm).
2. Air transfer grills at the entrance side of a compartment shall be allowed where they are provided at a height not less than 80 inches (2134 mm).
3. Partial-height toilet compartments are permitted where they begin at a height not more than 4.5 inches (114 mm) and extend to a height not less than 96 inches (2438 mm) above the finished floor surface.

[EH] Section 2902.9 Toilet room accessories is added as follows:

[EH] 2902.9 Toilet room accessories. A minimum of one hand-drying facility shall be provided in each toilet room where lavatories are provided.

Section 2902.10 Drive-in facilities is added as follows:

2902.10 Drive-in facilities. In addition to plumbing facilities otherwise required by Section 2902.1, public toilet facilities shall be provided to serve an occupant load equal to twice the number of parking stalls provided at drive-in restaurants and drive-in movie theaters.

CHAPTER 30
ELEVATORS AND CONVEYING SYSTEMS

SECTION 3001
GENERAL

Section 3001.1 Scope is replaced in its entirety as follows:

3001.1 Scope. This chapter and the *Denver Fire Code* govern the design, construction, installation, *alteration* and repair of elevators and conveying systems and their components.

Section 3001.3 Referenced Standards is replaced in its entirety as follows:

3001.3 Referenced standards. Except as otherwise provided for in this code, the design, construction, installation, *alteration*, repair, and maintenance of elevators and conveying systems and their components shall conform to the applicable standard specified in Table 3001.3, and ASCE 24 for construction in flood hazard areas established in Section 1612.3. The edition of the referenced standards is as adopted by the State of Colorado and Chapter 80 of the *Denver Fire Code*, or as adopted by Chapter 35 for standards not adopted by the State of Colorado.

SECTION 3002
HOISTWAY ENCLOSURES

Section 3002.3 Emergency signs is amended by adding the following sentences to the end of the paragraph:

All exit stairs, areas of refuge and area of rescue assistance shall be graphically located on a sign adjacent to the elevator call buttons. The sign's characters and the characters' height above the floor shall comply with ICC A117.1.

[F] SECTION 3003
EMERGENCY OPERATIONS

[F] Section 3003 Emergency Operations and all subsections are replaced in their entirety as follows:

Section 3003.1 General. Emergency elevator operations shall comply with Section 604 of the *Denver Fire Code*.

[F] SECTION 3006
ELEVATOR LOBBIES AND HOISTWAY OPENING PROTECTION

[F] Section 3006.3 Hoistway opening projection item 4 is replaced in its entirety as follows:

4. The elevator hoistway shall be pressurized in accordance with the design criteria of Section 909.15.2 of the *Denver Fire Code*.

[F] SECTION 3007
FIRE SERVICE ACCESS ELEVATOR

[F] Section 3007.6 Fire service access elevator lobby is amended to add the following sentence to the end of the section:

The enclosed fire service access elevator lobby shall have direct access to the building floor plate without passing through an *interior exit stairway or ramp*.

[F] Section 3007.6.2 Lobby enclosure is replaced in its entirety as follows:

3007.6.2 Lobby enclosure. The fire service access elevator lobby shall be enclosed with a *smoke barrier* having a *fire-resistance rating* of not less than 1 hour, except that lobby doorways shall comply with Section 3007.6.3. Fire service access elevator lobby shall not be used for storage.

Exceptions:

1. Enclosed fire service access elevator lobbies are not required at the *levels of exit discharge.*
2. Enclosed fire service access elevator lobbies are not required in *open parking garages.*
3. Enclosed fire service access elevator lobbies in enclosed parking garages shall be permitted to be enclosed in accordance with Section 509.4.2.

[F] Section 3007.6.3 Lobby doorways is amended by adding an exception as follows:

Exception: 3/4-hour *fire door assembly* is not required in enclosed parking garages. Such door shall comply with Section 509.4.2.

[F] Section 3007.6.4 Lobby size is amended by adding the following at the end of the paragraph:

An *area of rescue assistance* shall be permitted to be combined with the fire service access elevator lobby provided the 150 square feet (13.9 m^2) minimum area is increased to accommodate the *wheelchair spaces* required by Section 1009.6.3.

[F] Section 3007.8 Electrical power is replaced in its entirety as follows:

3007.8 Electrical power. The following features serving each fire service access elevator shall be supplied by both normal power and Type 60/Class 2/Level 1 emergency power:

1. Elevator equipment.
2. Elevator hoistway lighting.
3. *Ventilation* and cooling equipment for elevator machine rooms, control rooms, machine spaces and control spaces.
4. Elevator car lighting.

[F] Section 3007.9.1 Access is amended by adding the exception as follows:

Exception: The exit enclosure shall be permitted to have access to an enclosed parking garage through a fire service elevator lobby.

CHAPTER 31
SPECIAL CONSTRUCTION

SECTION 3103
TEMPORARY STRUCTURES

Section 3103 is replaced in its entirety with the following:

SECTION 3103
TEMPORARY STRUCTURES AND TEMPORARILY PLACED RELOCATABLE BUILDINGS

3103.1 General. Except for structures associated with an R-X occupancy, the provisions of Sections 3103.1 through 3103.4 shall apply to structures erected for a period of less than 180 days and relocatable buildings placed upon a specific site for a period of less than 180 days, or for a longer timeframe as allowed by the *building official* after review of a specific proposal. *Special event buildings*, tents, umbrella structures and other membrane structures erected for a period of less than 180 days shall comply with the *Denver Fire Code.* Temporary structures and temporarily-placed relocatable buildings associated with an R-X occupancy may be erected for a period of 2 years, with one 2-year extension only, subject to more strict timeframes in Section 429.13. Temporary structures erected, and relocatable buildings placed on a site for a longer period of time shall comply with applicable sections of this code.

Exception: Where approved by the *building official*, temporary structures and relocatable buildings may be placed on a site for a period of up to four years without a permanent foundation.

3103.1.1 Conformance. Temporary structures, temporary uses, and relocatable buildings shall conform to the structural strength, fire safety, *means of egress,* accessibility, light, ventilation, and sanitary requirements of this code as necessary to ensure public health, safety, and general welfare.

3103.1.2 Permit required. Temporary structures and relocatable buildings that cover an area greater than 120 square feet (11.16 m^2), including connecting areas or spaces with a common *means of egress* or entrance that are used or intended to be used for the gathering together of 10 or more persons; and Group R-X occupancy individual sleeping units shall not be erected, operated, or maintained for any purpose without obtaining a permit from the *building official.*

3103.2 Construction documents. A permit application and construction documents shall be submitted for each installation of a temporary structure or relocatable building. The construction documents shall include a site plan indicating the location of the temporary structure or relocatable building and information delineating the *means of egress* and the *occupant load*.

3103.3 Location. Temporary structures and relocatable buildings shall be located in accordance with the requirements of Table 602 based on the *fire-resistance rating* of the *exterior walls* for the proposed type of construction.

3103.4 Means of egress. Temporary structures and relocatable buildings shall conform to the *means of egress* requirements of Chapter 10 and shall have an exit access travel distance of 100 feet (30 480 mm) or less.

SECTION 3105
AWNINGS AND CANOPIES

Section 3105.4 Canopy special provisions is added as follows:

3105.4 Canopy special provisions. Canopies shall comply with all of the following:

1. A canopy may be entirely supported by the building to which it is attached.
2. Separation between different types of construction shall not be required.
3. Canopies shall comply with *Denver Fire Code* access requirements. The minimum height of canopies at locations not requiring Fire Department access shall be 8 feet (203 mm).
4. Canopies in the public right-of-way shall comply with Section 3202.
5. Canopies shall not obstruct required *exits*.
6. For the purposes of this code, a porte-cochere may be considered a canopy.
7. Canopies shall be built of materials consistent with the types permitted for the type of construction of the building.

SECTION 3109
SWIMMING POOLS, SPAS AND HOT TUBS

Section 3109.1 General is amended as follows:

3109.1. General. The design and construction of swimming pools, spas and hot tubs shall comply with Appendix T of this code.

Section 3116 HUD homes and factory-built structures is added as follows:

[CDH] SECTION 3116
HUD HOMESAND FACTORY-BUILT STRUCTURES

3116.1 Scope. This section shall regulate the installation, relocation, placement, alteration, repair, and addition of HUD homes and factory-built structures.

Exception: Construction trailers as allowed by Article 1, Section 1 of the Denver Building Code set for the sole purpose of sheltering construction management activity on a future or active construction site.

3116.2 Definitions.

Certified Installation Inspector. Independent contractors authorized by DOH to perform inspections and enforcement of the proper installation of manufactured homes. Enforcement shall include issuance of installation authorizations and permanent attachment of the certificate of installation insignia signifying compliance with Manufactured Home Installation Program.

Construction, Closed. Any building, building component, assembly, or system manufactured in such a manner that all concealed parts or processes of manufacture cannot be inspected before installation at the building site without disassembly, damage, or destruction.

Construction, Open. Any building, building component, assembly, or system manufactured in such a manner that all concealed parts or processes of manufacture can be readily inspected at the building site without disassembly, damage, or destruction.

Data Plate (HUD). Data plates of (HUD) manufactured homes are posted inside the unit affixed in a permanent manner near the main electrical panel or other readily accessible and visible location.

The data plate shall indicate the following minimum design criteria:

WIND ZONE: ZONE I

THERMAL: ZONE 3

ROOF LOADS: MIDDLE (30 PSF)

No HUD home shall be installed if any criteria do not meet these minimum requirements.

DOH. Colorado Division of Housing.

Factory-Built Nonresidential Structure. Any structure or component, including any closed panel system, designed primarily for commercial, industrial, or other nonresidential use, either permanent or temporary, including a manufactured unit that is wholly or in substantial part made, fabricated, formed, or assembled in manufacturing facilities for installation or assembly and installation on a permanent or temporary foundation at the building site. All nonresidential structures manufactured after December 2, 1991, must display a DOH Factory-Built Certification insignia.

Factory-Built Residential Structure. A manufactured home, including any closed panel system, constructed to the building codes adopted by the Colorado State Housing Board and designed to be installed on a permanent foundation, except for homes constructed to a federal manufactured home construction and safety standard and any home designated as a mobile home .

Factory-Built Structure. A factory-built nonresidential structure and a factory-built residential structure.

Federal Act. The "National Manufactured Housing Construction and Safety Standards Act of 1974", 42 U.S.C. Sec. 5401 *et seq*.

Foundation, Permanent. A structure that is designed or intended to:

(a) support a building from underneath;
(b) keep a building firmly affixed to the ground;
(c) prevent the building from moving; and
(d) not be removed from the ground or building.
(e) comply with all applicable provisions of the Denver Building Code.

Foundation, Temporary. A structure that is designed or intended to:

(a) support a building from underneath;
(b) keep a building firmly affixed to the ground;
(c) prevent the building from moving; and
(d) be removable from the ground or building.

HUD Home. A manufactured home constructed in compliance with the Federal Act, and any standard promulgated by the Secretary of the U.S. Department of Housing and Urban Development (HUD) pursuant to that federal act.

Manufactured Home. Any pre-constructed building unit or combination of pre-constructed building units or closed panel system that: (a) includes electrical, mechanical, or plumbing services that are fabricated, formed, or assembled at a location other than the site of the completed home; (b) is designed for residential occupancy in either temporary or permanent locations; (c) is constructed in compliance with the federal act, factory-built residential requirements, including those for multi-family structures, or mobile home standards; (d) is not self-propelled; and (e) is not licensed as a recreational vehicle.

Mobile Home. A manufactured home built prior to the adoption of the federal act. Such mobile homes may be unlabeled, or for Colorado homes built between 1971 and 1976, possess a State of Colorado Mobile Home Certification label.

3116.3 Permits required. HUD homes and factory-built structures shall comply with the provisions of the Denver Building Code to the extent outlined in Table 3116.3.

Construction documents shall be submitted for review and approval for all HUD homes or factory-built structures prior to the issuance of permits.

Plans of the factory-built structure approved by the DOH or third-party agency, shall be submitted for use as the City's Record Set and for use by the City Assessor's office. Permanent or temporary foundation plans shall be signed and sealed by a Colorado registered engineer for Factory-Built Non-residential Structures. Permanent foundation plans shall be signed and sealed by a Colorado registered engineer for Factory-Built Residential Structures.

Prior to beginning the installation of a manufactured home, the owner or registered installer must receive an Installation Authorization from the DOH. A certified Installer is not required to obtain an Installation Authorization.

Table 3116.3 – Regulatory Requirements[a]	
Structure Type	**Applicability of Denver Building Code requirements to HUD homes and factory-built structures**
Factory-Built Residential Structure containing an insignia of approval from the DOH	Denver Building Code authority is limited to the design, construction, and inspection of a permanent foundation; and any other site-built construction, except for materials shipped loose by the factory. The Denver Building Code regulates all alteration, repair, and additions to a factory-built residential structure.
Factory-Built Nonresidential Structure containing an insignia of approval from the DOH	Denver Building Code has authority over the design, construction, and inspection of the structure's temporary or permanent foundation, any other site-built construction, and all on-site interconnection of the factory assembled modules. The Denver Building Code regulates all alteration, repair, and additions to factory-built non-residential structures.
HUD Home containing a HUD label and Date Plate	A HUD home preempts Denver's building code requirements. The Denver Building Code regulates all alteration, repair, and additions to HUD homes after they are initially occupied for residential use.
Mobile Home	Mobile homes which do not possess State of Colorado certification label must conform to all the provisions of the Denver Building Code. DOH labeled homes are exempt from the provisions of the Denver Building Code but must provide, when required, documented mitigation measures for approval which will enable the structure to withstand Denver's minimum snow loads.
Open Construction	These structures are regulated by the Denver Building Code unless specifically *approved* otherwise by DOH.

a. The minimum required *fire separation distance* of all structure types shall be in accordance with the provisions of the *Denver Commercial Building Code* or *Denver Residential Code*, as applicable. The fire-resistance rating provided by the structure's exterior wall is used to determine the minimum fire separation distance. Fire-resistance rated exterior wall ratings shall be established in accordance with ASTM E-119. Minimum setbacks shall be as determined by Denver's zoning code.

3116.4 Manufactured Home Installation. Every manufactured home installed in a temporary or permanent location and designed and commonly used for occupancy by persons for residential purposes, must display a Certificate of Installation Insignia issued by the DOH, certifying that the unit is installed in compliance with the DOH standards. New homes shall be installed in accordance with the Colorado Manufactured Housing Installation Code, i.e., the home manufacturer's written installation instructions, or State approved alternate standards for used homes when instructions are not available. Application of the certification insignia is evidence that permanent utility service may be established. Permanent insignia application is required prior to the issuance of a Certificate of Occupancy to the home.

Exception: Temporary installations which are for the purpose of home display, which will be relocated to another location prior to use as a residence.

3116.5 Inspection and notice. Except as noted in Table 3116.3, the adopted codes and standards of the Colorado Housing Board and the Federal Act preempt the Denver Building Code in relation to HUD homes and factory-built structures.

The following statement shall appear on the certificate of occupancy issued to a HUD home or factory-built structures: "In accordance with Federal and Colorado law, this manufactured structure has not been inspected in its entirety by the City and County of Denver and may or may not meet the requirements of the Denver Building Code."

CHAPTER 32
ENCROACHMENTS INTO THE PUBLIC RIGHT-OF-WAY

[DOTI] SECTION 3202
ENCROACHMENTS

Section 3201 General is replaced in its entirety as follows:

[DOTI] 3201.1 General. All encroachments into the public right of way shall comply with the Denver Revised Municipal Code, Chapter 49, Rules & Regulations of the Department of Transportation and Infrastructure, and all departmental published standards.

Unless otherwise permitted by the Department of Transportation and Infrastructure, the exterior doors of buildings located within the boundary described as - beginning at the intersection of East 14th Avenue and Grant Street, thence north on Grant Street to 21st Street, thence northwest on 21st Street to Blake Street, thence southwest on Blake Street to Cherry Creek, thence southeast on Cherry Creek to West 14th Avenue, thence east on 14th Avenue to the point of beginning - shall not project more than one foot beyond the property line, except that in alleys no projection beyond property line is permitted. The exterior doors of buildings located outside of the above-described described boundary that swing over the property line shall be maintained normally closed.

Sections 3202.2 and 3202.3 are deleted in their entirety.

Section 3202.4 Temporary encroachments is replaced in its entirety as follows:

3202.4 Temporary encroachments. Where allowed by the local authority having jurisdiction, vestibules and storm enclosures shall not be erected for a period of time exceeding 7 months in any one year and shall not encroach more than 3 feet (914 mm) nor more than one-fourth of the width of the sidewalk beyond the street lot line, unless otherwise permitted by the Department of Transportation and Infrastructure. Temporary entrance *awnings* shall be erected with a clearance of not less than 7 feet (2134 mm) to the lowest portion of the hood or *awning* where supported on removable steel or other *approved* noncombustible support.

CHAPTER 33
SAFEGUARDS DURING CONSTRUCTION

SECTION 3301
GENERAL

Section 3301.1 Scope is replaced in its entirety as follows:

3301.1 Scope. The provisions of this chapter shall govern safety during construction, demolition, or moving; and the protection of adjacent public and private properties.

Section 3301.3 Demolition and moving standard is added as follows:

3301.3 Demolition and moving standard. Unless provided for in other portions of this code, the following additional standard shall be utilized in relation to the demolition and moving work covered in this chapter, American National Standard Institute publication, "Demolition Safety Requirements A10.6-2006".

SECTION 3302
CONSTRUCTION SAFEGUARDS

[DOTI] Section 3302.2 Manner of removal is amended by adding of the following sentence:

All adjacent streets, alleys and other public ways and places shall be kept free and clear of all rubbish, refuse and loose material resulting from the moving, demolition or demolition removal operations.

[EH] Section 3302.2.1 Dust is added as follows:

[EH] 3302.2.1 Dust. All dust resulting from demolition operations shall be settled with water and *approved* by the Agency.

SECTION 3303
DEMOLITION

Section 3303.1.1 Registered design professionals' reports is added as follows:

Registered design professionals' reports. If the building to be demolished shares a common wall with an adjacent building, the owner of the building to be demolished shall provide a registered design professional's report assessing the effect the removal of the adjacent building will have on the structural capacity and stability of the remaining buildings. Should the registered design professional's report indicate adverse effects on the adjacent buildings, a demolition permit will not be issued until the stability of the buildings is resolved. Buildings four or more stories in height shall require a registered design professional's report to be filed with the Agency as part of the application for a demolition permit being issued. The registered design professional's report shall contain information as to:

1. Type of construction.
2. Method of demolition.
3. A structural survey made to determine the condition of the structure.
4. Determination of the possibility of unplanned collapse of any portion of the building or structure.
5. Street, sidewalk or other public way closures.

6. Method of protecting the public.
7. Pertinent data and analysis pertaining to adjacent structures.
8. Any other information deemed necessary by the *building official* to determine adverse effects on adjacent buildings.

The Agency may request additional registered design professionals' reports for other demolition operations when deemed necessary.

[EH] Section 3303.1.2 Asbestos is added as follows:

[EH] 3303.1.2Asbestos. Buildings, or portions of buildings, being demolished containing friable asbestos shall conform to the provisions of the National Emission Standard for Asbestos and all other federal and state regulations. A demolition permit shall not be issued until a copy of the Demolition Approval Notice from the Colorado Department of Public Health and Environment (CDPHE) is submitted to the Agency.

Section 3303.4 Vacant lot is replaced in its entirety as follows:

3303.4 Vacant lot. Where a structure has been demolished or removed, the vacated lot shall be filled and maintained to the existing grade. Upon completion of the removal of a building, structure or utility, by demolition the ground shall be left in a clean, smooth condition. Holes, basements, or cellars shall be filled with an inorganic material, but the top one foot of fill shall be clean earth. The filling of such excavations shall not be required when a building permit has been issued for a new building on the site and construction is to be started within 60 days after completion of the demolition or moving operations. The contractor who is issued the building permit shall provide a temporary barricade protecting the excavation on all sides as specified for safety by the Agency. The temporary barricade may remain in position for a time not exceeding 3 days, after which a solid barricade or fence shall be provided, or the excavation filled.

Section 3303.6 Utility connections is amended by adding the following sentence:

All service utility connections shall be shut off, capped, or otherwise controlled outside the building line, or area of demolition prior to beginning demolition work.

Section 3303.6.1 Relocation of utilities is added as follows:

3303.6.1 Relocation of utilities. Any power, water or other utilities required to be maintained during demolition shall be temporarily relocated and protected.

Section 3303.6.2 Dangerous utilities is added as follows:

3303.6.2 Dangerous utilities. A determination shall be made by the contractor if any type of hazardous chemicals, gases, explosives, flammable materials, or similarly dangerous substances have been used in any pipes, tanks, or other equipment on the property. When the presence of any such substance is apparent or suspected, testing and purging shall be performed by the demolition contractor and the hazard eliminated prior to demolition operations. A summary of hazard mitigation shall be provided to the Agency upon request.

Section 3303.8 Shoring and bracing of damaged structures is added as follows:

3303.8 Shoring and bracing of damaged structures. When persons are required to work within a structure to be demolished which has been damaged by fire, flood, explosion or other cause, the structure shall be braced or shored for safety.

Section 3303.9 Machine and explosive demolition is added as follows:

3303.9 Machine and explosives demolition. Machine demolition shall be subject to approval by the Agency as a part of the permit issuance process described in the Total Demolition Guide. Contractors utilizing explosives in their demolition operation shall be specifically *approved* by the *building official*. For storage and transportation of explosives, see the *Denver Fire Code*.

SECTION 3306
PROTECTION OF PEDESTRIANS

Section 3306.1.1 Safety watchman is added as follows:

3306.1.1 Safety watchman. A safety watchman shall be present on the job site to prevent the entry of unauthorized persons. The safety watchman shall not simultaneously participate in other demolition tasks. On demolition sites, when approved by the Agency, the safety watchman may be used in lieu of site protection required by Section 3306.1.

SECTION 3307
PROTECTION OF ADJOINING PROPERTY

Section 3307.1 Protection required is replaced in its entirety as follows:

3307.1 Protection required. Adjoining public and private property shall be protected from damage during construction, excavation, remodeling, demolition, and building relocation work. Protection is the responsibility of the person performing the construction, excavation, remodeling, demolition or building relocation work. Protection shall be provided for footings, foundations party walls, chimneys, skylights, roofs, fences, and landscaping. Provisions shall be made to control water runoff and erosion during construction, excavation, remodeling, demolition, or relocation activities.

Section 3307.1.1 Notification for buildings regulated by the DRC. The person making or causing an excavation that requires shoring or benching, a demolition requiring a total demolition permit, or relocation shall provide written notice to the owners or homeowner associations of adjoining properties to inform them that the excavation, demolition, or relocation is to be made; shall provide contact information for the person doing the excavation, demolition or relocation; and shall protect adjoining properties as required by the applicable provisions of Chapter 33 of the *Denver Fire Code*. Said notification shall be delivered not less than 10 days prior to the scheduled starting date of the excavation, demolition, and/or relocation. Where required by the Agency, approval of adjoining property owners shall be provided where elements extend into their property.

1. Written notice to adjoining property owners will be verified at the time of permit application submittal. The applicant shall submit a copy of the notification letter and one of the following: Personal notification forms, showing name and address of property owner notified, and signature of accepting party.

2. USPS certified mail return receipts, showing name and address of property owner notified, and signature of accepting party.

3. When either the signed return receipt or return of the notification is delayed by USPS:

    3.1. A USPS tracking report indicating notification was sent by certified mail with return receipt, showing the USPS assigned tracking number and date of first attempted delivery not less than 21 days prior, and

3.2. A letter or form, signed by the contractor, with license information, which correlates the USPS assigned tracking number to the name and address of the notified property owner, and states that personal contact with the property owner has been unsuccessfully attempted.

4. A signed affidavit that lists the name and address of the notified property owners and date of notice. All USPS certified mail return receipts shall be maintained on the site at all times for random inspection by the Agency.

Section 3307.1.2 Notification for all other buildings. The person making or causing an excavation, demolition, or relocation shall provide written notice to the owners of adjoining properties to inform them that the excavation, demolition, or relocation is to be made; shall provide contact information for the person doing the excavation, demolition, or relocation; and shall protect adjoining properties as required by Section 3307.1 of this code. Said notification shall be delivered not less than 10 days prior to the scheduled starting date of the excavation, demolition, and/or relocation. Where required by the Agency, approval of adjoining property owners shall be provided where elements extend into their property.

Written notice to adjoining property owners will be verified at the time of permit application submittal. The applicant shall submit a copy of the notification letter and one of the following:

1. Personal notification forms, showing name and address of property owner notified, and signature of accepting party.

2. USPS certified mail return receipts, showing name and address of property owner notified, and signature of accepting party.

3. When either the signed return receipt or return of the notification is delayed by USPS:

   3.1. A USPS tracking report indicating notification was sent by certified mail with return receipt, showing the USPS assigned tracking number and date of first attempted delivery not less than 21 days prior, and

   3.2. A letter or form, signed by the contractor, with license information, which correlates the USPS assigned tracking number to the name and address of the notified property owner, and states that personal contact with the property owner has been unsuccessfully attempted.

4. A signed affidavit that lists the name and address of the notified property owners and date of notice. All USPS certified mail return receipts shall be maintained on the site at all times for random inspection by City and County representatives.

Section 3307.3 Repair of damage to public property is added as follows:

[DOTI] 3307.3 Repair of damage to public property. As a condition of obtaining a permit to demolish or move any building, structure, or utility, the contractor assumes liability for any damage to public property occasioned by such moving, demolition or removal operations. The contractor agrees to repair any damage to public property, including any public sidewalks, occasioned by such moving, demolition or removal operations. Failure to make such repairs within 30 days shall be grounds for the revocation of the contractor's license.

Section 3307.4 Work abutting the public way is added as follows:

[DOTI] 3307.4 Work abutting the public way. Prior to the issuance of a permit by the Agency for the construction, demolition, or relocation of any building involving excavation extending within one foot of the angle of repose or a slope of one to one under any public sidewalk, street, alley or other public property, the owner of the property or proposed building shall submit to the Manager of the Department of Transportation and Infrastructure an indemnity bond in the amount determined by the Manager in a form approved by the City Attorney.

SECTION 3308
TEMPORARY USE OF STREETS, ALLEYS AND PUBLIC PROPERTY

[DOTI] Section 3308.3 Transportation approval is added as follows:

[DOTI] 3308.3 Transportation approval. Trucks and other equipment used by the contractor shall not interfere with or block either vehicular or pedestrian traffic, except when approved by the Department of Transportation and Infrastructure. Where it becomes necessary to transport units of a demolished building, structure, or utility through public streets, alleys, or other public ways and places, permission to do so shall be obtained from DOTI.

Section 3315 Moving and relocation of structures is added as follows:

SECTION 3315
MOVING AND RELOCATION OF STRUCTURES

3315.1 Scope. Buildings, structures, or utilities which are moved from one location to another within, to, or from the City shall conform to all requirements of this code. These buildings, structures, or utilities shall be inspected and approved by the Agency prior to moving.

[DOTI] 3315.2 Transportation approval. Moving of structures on the public way by the contractor shall not interfere with or block either vehicular or pedestrian traffic, except when approved by the Department of Transportation and Infrastructure. Where it becomes necessary to transport units of a demolished building, structure, or utility through public streets, alleys, or other public ways and places, permission to do so shall be obtained from DOTI. As required by DOTI the Contractor shall submit to the Manager of DOTI an indemnity bond in the amount determined by the Manager in a form approved by the City Attorney.

[DOTI] 3315.3 Moving on the Public Way. Moving on the public right of way shall follow Department of Transportation and Infrastructure regulations.

3315.4 Storage of moved buildings. Buildings, structures, or utilities shall not be stored on any property for more than 72 hours, unless approved by the Agency.

CHAPTER 35
REFERENCED STANDARDS

The following standard is added as follows:

CGSB Canadian General Standards Board
Portage, III, 6B1
11 Laurier Street
Gatineau QC K1A 1G6
Canada

CGSB-37.50-M89: Asphalt, Rubberized for Roofing and Waterproofing

NFPA National Fire Protection Association
1 Batterymarch Park
Quincy, MA 02169-7471

415—16: Standard on Airport Terminal Buildings, Fueling Ramp Drainage, and Loading Walkways

Appendix S

APPENDICES
APPENDIX ADOPTION STATUS

Appendices are Added, Adopted, Adopted as Amended, or Not Adopted as part of this code as noted in Appendix Adoption Table 1. Provisions in Appendices that are added, adopted, or adopted as amended carry the full weight and mandatory enforceability of this code.

COMMERCIAL BUILDING CODE APPENDIX ADOPTION TABLE 1

APPENDIX	TITLE	STATUS
A	Employee Qualifications	Not Adopted
B	Board of Appeals	Not Adopted
C	Group U – Agricultural Buildings	Not Adopted
D	Fire Districts	Not Adopted
E	Supplementary Accessibility Requirements	Adopted
F	Rodent Proofing	Adopted
G	Flood Resistant Construction	Not Adopted
H	Signs	Adopted as Amended
I	Patio Covers	Adopted
J	Grading	Not Adopted
K	Administrative Provisions	Not Adopted
L	Earthquake Recording Instrumentation	Not Adopted
M	Tsunami-Generated Flood Hazard	Not Adopted
N	Replicable Buildings	Not Adopted
O	Performance-Based Application	Not Adopted
P	Construction in Designated Special Construction Zones	Added
Q	Reserved	--
R	Colorado Title 9 Article 5 – Standards for Accessible Housing	Added
S	Construction of Airport Buildings and Structures	Added
T	2021 International Swimming Pool and Spa Code Section 305, remainder of the 2021 International Swimming Pool and Spa Code is not adopted.	Added as Amended

Appendix H Signs is amended as follows:

APPENDIX H
SIGNS

SECTION H101
GENERAL

Section H101.1.1 Coordination with zoning code is added as follows:

H101.1.1 Coordination with zoning code. The provisions of this appendix, including definitions used herein, are specific to the application of this code and appurtenant references. The Denver Zoning Code (DZC) contains independent requirements for signs that apply in addition to this code. If a sign is exempt from a permit in the Denver Building Code, a zoning permit may still be required based on regulations in the DZC. If a sign is exempt from a permit in the DZC, a building permit may still be required based on regulations in this code. Where there is a conflict between the requirements of this code and the Denver Zoning Code, the most restrictive criteria shall govern.

Appendix P Construction in designated special construction zones is added as follows:

APPENDIX P

CONSTRUCTION IN DESIGNATED SPECIAL CONSTRUCTION ZONES

SECTION P101
GENERAL

P101.1 Scope. All construction, alteration, repairs, demolition, or relocation in areas designated under Article VII, Chapter 10 of the Revised Municipal Code as Special Construction Zones shall conform to the provisions of this Chapter.

SECTION P102
GENERAL PROVISIONS

P102.1 Permits. No permits for construction, alteration, repairs, demolition, or relocation in a designated Special Construction Zone shall be issued without being in compliance with all recommendations contained in the engineer's report as required by the Administration Section.

P102.2 Engineers reports. If the applicant is required to prepare an engineer's report pursuant to the Administration Section, the Agency may require such additional information and recommendations as it deems necessary and may require such additional measures as are necessary to minimize potential hazards during construction and control hazards from the completed structure.

P102.3 Inspections. All construction and excavation sites shall be subject to inspection by the Agency, Fire Department and the Environmental Quality section within The Department of Public Health and Environment, and results of tests or monitoring required by this Chapter shall be available at the site for inspection.

P102.4 Work stoppage. In the event of a material violation with the requirements of this Chapter, the Agency may stop all construction activity until it is satisfied that the violation has been corrected.

SECTION P103
HAZARDOUS GASES GENERATED BY LANDFILLS

P103.1 New construction. Except as provided in the Administration Section, all new buildings, structures, and utilities to be constructed in a Special Construction Zone, which is so designated because of the presence of hazardous gases generated by landfills, shall be designed by an engineer registered in the state of Colorado to control and protect against accumulation of over 1.0 percent by volume of flammable gas in the building, structure or utility. The following precautions shall be taken during and after construction activity:

1. A flammable gas indicator shall be utilized at all times during trenching, excavating, drilling or when working within 10 feet of an open excavation.
2. When trenching, excavating, or drilling deeper than 2 feet (610 mm) into the soil or fill, or in the presence of detectable concentrations of 1.0 percent by volume of flammable gas, the operating equipment shall be provided with spark proof exhausts.
3. A dry chemical fire extinguisher, *approved* by the Fire Department, shall be provided on all equipment used in the landfill.
4. Personnel within or near an open trench or drill hole deeper than 2 feet (610 mm) into the soil or fill shall be fully clothed, wear shoes with nonmetallic soles and wear a hard hat and safety goggles or glasses.
5. Exhaust blowers shall be used in instances where trenches may show a build-up of flammable gas of 1.0 percent by volume or less than 19.5 percent by volume of oxygen.
6. Smoking and/or an open flame shall not be permitted in any area within 100 feet (30 480 mm) of the excavation.
7. Personnel shall be kept upwind of any open trench unless the trench and the downwind atmosphere are continuously monitored.
8. Before personnel are permitted to enter an open trench, the trench shall be monitored for flammable gas and at least a 19.5 percent-by-volume oxygen sufficiency. When in the excavation, each work party shall be working no more than 5 feet (1524 mm) from a continuously operating flammable gas and oxygen monitor.
9. The applicant shall employ an inspector whose duty it shall be to effect continuous compliance with the foregoing precautions. The inspector shall be a qualified person approved by the Agency or shall be an engineer registered with the state of Colorado or a person in the employ of, or subject to, the direct supervision and control of such an engineer. Said inspector shall submit a written report of his inspection to the applicant and to the Agency at 10-day intervals during active construction stating that all new construction is in compliance with these regulations, and that all testing and monitoring has been and is being done as required by the Code.
10. After construction is completed, hazardous gas monitoring devices *approved* by the Fire Department shall be installed in the completed building or structure in such number and in such places within the building or structure as may be required by the Fire Department.

P103.2 Alteration or repair of existing buildings, structures, or utilities. Except as provided in the Section 103 of the Denver Building Code and P103.3, no alterations or repairs to any existing building, structure or utility shall be made unless the following precautions are taken:

1. Within 5 days prior to applying for a permit under Section 1 of the Denver Building Code to alter or repair an existing building, structure or utility, the work site shall be tested for the presence of flammable gas by an engineer registered in the state of Colorado.

2. The applicant shall be exempt from all other requirements of this Section P103.2 if:
    a. Test results show that there is less than 2.0 percent of the Lower Explosive Limit (L.E.L.) of hazardous gas, then the permit for the work shall be issued; and
    b. Upon completion of the work, the applicant shall install hazardous gas monitoring devices *approved* by the Fire Department in such number and in such places within the building or structure as may be required by the Fire Department.
3. If the test results show that there is 2 percent or more of the Lower Explosive Limit (L.E.L.) of hazardous gas, then the applicant shall take all of the precautions pursuant to Section P103.1 as if the construction were new construction.

P103.3 Exemption. Whether or not he is an applicant for a permit, the owner of real property within a Special Construction Zone may apply to the Building Agency for a certificate of exemption from the provisions of Article VII, Chapter 10 of the Revised Municipal Code and Section P103 of this Section. To obtain such exemption, said owner shall have his property tested by an engineer registered in the state of Colorado and tests shall meet the following requirements:

1. A test for the presence of flammable gas shall be performed at a time when there is frost on his property to a depth of at least 6 inches (152 mm) in the soil, again at a time when there is no frost in the soil, and again within 5 days of the date when an exemption certificate is applied for.
2. The test holes shall be placed along each major boundary line of the real property for which the exemption is sought in such number and at such locations as the engineer deems proper.
3. If the test results show that there is less than 2.0 percent of the lower explosive limit (L.E.L.) of flammable gas, and if such test results are satisfactory to the Agency, then the Agency shall issue a certificate stating that the real property described in the certificate is exempt from the provisions of Article 647 of the Revised Municipal Code and Section P103 of this section.
4. As a condition of receiving an exemption certificate from the Agency, the owner shall acquire and install in all existing and future buildings and structures devices *approved* by the Fire Department to monitor for the presence of hazardous gas in such number and in such places within the building or structure as may be required by the Fire Department.
5. Upon a finding that flammable gas is present in amounts greater than 2 percent of the lower explosive limit on any property where an exemption certificate has been issued, the Agency shall revoke the exemption certificate. Further, upon a finding that the monitoring devices on any property for which an exemption certificate has been issued are inoperative, the Agency may suspend or revoke the exemption certificate.

Appendix R Colorado Revised Statutes Title 9 Article 5 – Standards for Accessible Housing is added as follows:

APPENDIX R

COLORADO REVISED STATUTES TITLE 9 ARTICLE 5 - STANDARDS FOR ACCESSIBLE HOUSING

SECTION R101
REFERENCE DOCUMENTS

R101.1 Accessibility standard. The ICC/ANSI A117.1 Accessible and Usable Buildings and Facilities standard referenced in this appendix and as described in definition 5.5 of Colorado Revised Statutes 9.5.101 shall mean the 2017 ICC A117.1 standard as referenced in the 2021 editions of the *Denver Commercial Building Code* and *Denver Residential Code*.

SECTION R102
STATE STATUTE AS AMENDED

Colorado Revised Statutes Title 9, Article 5 is reproduced in this appendix for reference. (This language is current through all Laws passed during the 2022 Legislative Session)

9-5-101. Definitions

As used in this article 5, unless the context otherwise requires:

(1) "Accessibility point" means a unit of value exchanged for different levels of accessible dwelling types to satisfy the requirements for dwelling accessibility contained in this article.

(2) "Accessible route" means an interior or exterior circulation path that complies with ICC/ANSI A117.1.

(3) Repealed.

(4) "Detached residence" means a one- or two-family residence that is separated from adjacent dwellings by an unobstructed physical space. A one- or two-family residence that is separated from an adjacent dwelling by a physical space of less than three feet shall not be considered a detached residence.

(5) "Ground story level" means the lowest story in a dwelling unit containing habitable rooms or areas with an accessible entrance located on an accessible route that contains living, sleeping, cooking, bathing, and toilet facilities. For the purposes of this article, a basement shall not be considered the ground story level if the finished basement floor is located more than four feet below the exterior finished grade determined at any point along the exposed periphery of the dwelling unit.

(5.5) "ICC/ANSI A117.1" means the "Accessible and Usable Buildings and Facilities" standard, or any successor standard, promulgated and revised by the International Code Council.

(6) "Project" means the total number of parcels and buildings in a development planned or constructed by the same developer, builder, or entity on one site or contiguous sites, and also includes all parcels and structures that are parts of the same planned development application or agreement. The separation of contiguous individual buildings, units, lots, tracts, or parcels of land by a property line or by a public or private road shall not create a separate project.

(7) "Property" means the site, parcels of land, plats, lots, tracts, individual dwelling units, existing and proposed structures, and the built environment.

(8) "Residential dwelling unit" means any portion of a building that contains living facilities, including a room or rooms in a facility that have shared cooking, bathing, toilet, or laundry facilities such as dormitories, shelters, assisted living facilities, and boarding homes. "Residential dwelling unit" also means facilities that include provisions for sleeping, cooking, bathing, and toilet facilities for one or more persons and are used for extended stays, such as time-shares and extended-stay motels. "Residential dwelling unit" does not mean a guest room in a motel or hotel.

(9) "Technically infeasible", in reference to a proposed alteration to a building or facility, means that the proposed alteration is not implemented because:

(a) An existing structural condition or conditions make such alteration labor- or cost-prohibitive;

(b) The building or facility is in strict compliance with minimum accessibility requirements for new construction and, due to existing physical or site constraints, such alteration would negatively impact such compliance.

(10) "Type A dwelling unit" means a dwelling unit designed in accordance with ICC/ANSI A117.1, section 1003, or any successor section within ICC/ANSI A117.1.

(11) "Type A multistory dwelling unit" means a multiple-story dwelling unit with a ground story level designed in accordance with ICC/ANSI A117.1, section 1003, or any successor section within ICC/ANSI A117.1, and, if provided, accessible laundry facilities on the ground story level.

(12) "Type B dwelling unit" means a dwelling unit with a ground floor level designed in accordance with ICC/ANSI A117.1, section 1004, or any successor section within ICC/ANSI A117.1.

(13) "Type B multistory dwelling unit" means a multiple-story dwelling unit with a ground story level that is designed in accordance with ICC/ANSI A117.1, section 1004, or any successor section within ICC/ANSI A117.1, and, if provided, accessible laundry facilities on the ground story level.

(14) "Type B visitable ground floor" means a multiple-story dwelling unit with an accessible entrance and toilet facility designed in accordance with ICC/ANSI A117.1, section 1004, or any successor section within ICC/ANSI A117.1.

(15) "Undue hardship" means a substantial and unusual hardship that is the direct result of unique physical site conditions such as topography or geology, or that is the direct result of other unique or special conditions encountered on a property, but that are not typically encountered in the jurisdiction in which such property is located. Constraints, complications, or difficulties that may arise by complying with these statutory standards for accessibility but that do not constitute an undue hardship shall not serve to justify the granting of an exception or variance.

9-5-102. Disabilities covered - purpose

(1) This article is intended to provide accessibility standards for residential projects designed to serve persons with non-ambulatory disabilities, semi-ambulatory disabilities, sight disabilities, hearing disabilities, disabilities of incoordination, and aging.

(2) Design criteria. Design criteria must comply with ICC/ANSI A117.1.

9-5-103. Applicability of standards - enforcement

(1) The standards and specifications set forth in this article shall apply to all buildings and facilities used for housing that are constructed in whole or in part by the use of state, county, or municipal funds or the funds of any political subdivision of the state or that are constructed with private funds. All such buildings and facilities to be constructed from plans on which architectural drawings are started after July 1, 1975, from any one of these funds or any combination thereof shall conform to each of the standards and specifications prescribed in this article. The governmental unit responsible for the enforcement of this article shall grant exceptions to or modify any particular standard or specification when it is determined that it is impractical and would create an undue hardship. Any such exception or modification of the provisions of this article shall be made in writing as a matter of public record. These standards and specifications shall be adhered to in those buildings and facilities that are constructed or proposed on or after April 29, 2003. This article shall apply to permanent buildings.

(2) The jurisdiction with responsibility for enforcement of this article pursuant to section 9-5-104 shall designate a board of appeals to hear and resolve appeals of orders, decisions, or determinations made by the enforcing agency regarding the application and interpretation of this article.

(3) Any building or facility that would have been subject to this article 5 but was under construction prior to July 1, 1976, must comply with the following:

(a) If the walls or defining boundaries of an element or space are altered, then the altered element or space shall comply with the applicable provisions of section 9-5-105, unless such alteration is technically infeasible. If full compliance with this article is technically infeasible, compliance shall be implemented up to the point of technical infeasibility. No alteration shall be undertaken that negatively impacts accessibility of a building or facility pursuant to ICC/ANSI A117.1. This subsection (3)(a) shall not be construed to require the moving of any existing walls not otherwise planned to be moved.

(b) Any additions to a building or facility shall be treated as new construction for the purposes of enforcement of this article.

(4) The general assembly finds and declares that the standards and specifications set forth in this article are of statewide concern. Nothing in this article shall prohibit any municipality or other governmental subdivision from making and enforcing standards and specifications that are more stringent, and thus provide greater accessibility, than those set forth in this article.

9-5-104. Responsibility for enforcing standards

(1) The responsibility for enforcement of this article is as follows:

(a) For factory-built residential structures as defined in section 24-32-3302 (10), C.R.S., the division of housing created in section 24-32-704, C.R.S.;

(b) In a political subdivision that does not have a local building code, the division of housing created in section 24-32-704, C.R.S.;

(c) For all other housing or in a political subdivision that has adopted a building code, by the building department, or its equivalent, of the political subdivision having jurisdiction.

9-5-105. Exemptions for certain privately funded projects

(1) Accessible dwelling units shall be provided as required in this article; except that this article does not apply to privately funded projects for the construction of a detached residence or residences or to other types of residential property containing less than seven residential units.

For determining the number of accessibility points required pursuant to subsection (2) of this section, the accessible dwelling unit types shall have the following point values:

Type A dwelling unit …… 6
Type A multistory dwelling unit… 5
Type B dwelling unit …… 4
Type B multistory dwelling unit… 3
Type B visitable ground floor …... 1

(2) Residential projects.

(a) A project shall be assigned accessibility points based on the number of units contained within the project as follows:

Number of units within the Accessibility points project and total number of points required:

0-6	0
7-14	6
15-28	12
29-42	18
43-57	24
58-71	30
72-85	36
86-99	42
100-114	48
115-128	54
129-142	60
143-157	66
158-171	72
172-185	78
186-199	84 etc.
200 +	+6 additional points every 14 units or fraction thereof

(b) A project shall include enough accessible dwelling units to achieve at least the specified number of accessibility points required pursuant to paragraph (a) of this subsection (2). A project may use any combination of accessible dwelling unit types to comply with this section.

9-5-106. Implementation plan

The builder of any project regulated by this article shall create an implementation plan that guarantees the timely and evenly phased delivery of the required number of accessible units. Such plan shall clearly specify the number and type of units required and the order in which they are to be completed. Such implementation plan shall be subject to approval by the entity with enforcement authority in such project's jurisdiction. The implementation plan shall not be *approved* if more than thirty percent of the project is intended to be completed without providing a portion of accessible units required by section 9-5-105; except that, if an undue hardship can be demonstrated, or other guarantees provided are deemed sufficient, the jurisdiction having responsibility for enforcement may grant exceptions to this requirement. The implementation plan shall be *approved* by the governmental unit responsible for enforcement before a building permit is issue.

Appendix S Construction of airport buildings and structures is added as follows:

APPENDIX S
AIRPORT STRUCTURES AND SYSTEMS

All Chapters and Sections of 2016 National Fire Protection Association 415 Standard on Airport Terminal Buildings, Fueling Ramp Drainage, and Loading Walkways, shall be used in their entirety except as amended below:

CHAPTER 1
ADMINISTRATION

Add new text as follows:

1.4 Permits Required. On Denver International Airport property, permanent or temporary new construction of, and alterations and repairs to, buildings, miscellaneous structures, sites and portions thereof, and changes in the occupancy or function of a space shall be subject to this Code's and the Denver Fire Code's construction and operational permit requirements as directed by the *Building and Fire Code Officials*.

> **Exception:** Facilities, buildings, and structures wholly owned, occupied and maintained by an agency or subdivision of Colorado State or the federal government are subject to the provisions of the *Denver Fire Code*, per the direction of the *fire code official*, but are not otherwise subject to the *Denver Commercial Building Code*. Contractors performing work in or on these facilities, buildings, and structures need only be licensed in accordance with the *Denver Fire Code*, per the direction of the *fire code official*.

Regional Transportation District (RTD) commuter-rail platforms and all light- and commuter-rail amenities including, but not limited to, canopies, driver relief stations, ramps, stairways, lifts, elevators, and retaining walls that support adjacent private or public rights-of-way shall be subject to this Code's and the Denver Fire Code's construction and operational permit requirements as directed by the *Building and Fire Code Officials*.

> **Exception:** Where located on RTD right-of-way, RTD traction power substations, signal/communication relay stations and associated conduit and wiring for the operation of the light- and commuter-rail lines, rail tracks, retaining walls supporting only rail tracks, and light-rail passenger platforms.

Chapter 3, Definitions, in replaced in its entirety as follows:

CHAPTER 3
DEFINITIONS

Section 3.3 General Definitions.

3.3.1 Aircraft Fueling Ramp. Any outdoor area at an airport, including aprons and hardstands, where aircraft are normally fueled or defueled.

3.3.2 Aircraft Loading Walkway (Passenger Loading Bridge or Passenger Boarding Bridge). An aboveground device through which passengers move between a point in an airport concourse building and an aircraft. Included in this category are walkways that are permanently fixed or essentially mobile in nature and can fold, telescope, or pivot from a fixed point.

3.3.3 Aircraft Loading Walkway on Grade Level. A fully enclosed walkway supported on grade through which passengers move between a point in an airport concourse building and an aircraft.

3.3.4 Airport Ramp. Any outdoor area, including aprons and hardstands, where aircraft can be positioned, stored, serviced, or maintained, irrespective of the nature of the surface of the area.

3.3.5 Airport Concourse Building (Concourse). A structure used primarily to support air passenger enplaning and deplaning operations. Airport concourse buildings are distinguished from airport *terminal* buildings in that all occupants have cleared security and accommodations are not provided for nonsecure private or public ground transportation vehicles. Airport concourse buildings have provisions on one or more sides for aircraft boarding and flight service operations such as fueling, deicing, stocking, and waste disposal. They can be located adjacent to but separate from *airport terminal buildings*, accessible via above ground or through subway passages, and include passenger support functions such as flight itinerary modifications, waiting rooms, consumer services, retail, etc. Airport concourse buildings can also house baggage conveyance and transport equipment and functions, offices, moderate-hazard storage, and similar occupancies.

3.3.6 Airport Terminal Building (Terminal). A structure that can accommodate multimodal transportation but used primarily for air passenger support operations. *Airport terminal buildings* can accommodate all operations provided in airport concourse buildings but are distinguished from *concourses* in that they can also accommodate occupants that have not been security-screened in addition to nonsecure functions such as private-vehicle and mass transit pick-up / drop-off / parking, passenger check-in, ticket issuance, and baggage check-in / pick-up. In addition, *terminals* may have provisions for controlled release of deplaned passengers from secure to nonsecure areas such as passenger shuttle train discharge platforms and Customs screening.

3.3.7 Freight Terminal Building (Air Cargo Building). A structure used for the processing and/or storage of incoming or outgoing freight and other necessary functions in connection with air freight operations. Aircraft shall not be housed, stored, loaded, or unloaded, undergo service, repairs, or alterations within a freight terminal building. Freight terminal buildings shall comply with the Group S-1 occupancy requirements of this code.

3.3.8 Inline Tenant Spaces. Contiguous rooms or spaces located around the perimeter of common or circulation areas and often leased by the airport (owner) to individuals or groups (tenants) for mercantile, restaurant, concession, service, office, storage or similar occupancies or functions. These are distinguished from kiosks in that they are exposed to common or circulation areas on less than 4 sides. Inline tenant spaces are required to comply with all codes and standards applicable to the overall *terminal* or *concourse* in which they're located. In *concourse buildings*, *inline tenant spaces* are usually located along an exterior wall.

3.3.9 Kiosk. Freestanding floor-supported or suspended structure that is not readily relocated and displaces people in public circulation areas of *terminals* and *concourses*. Kiosks include booths, stands, counters, carts, vending machines, advertising signboards, information displays, sculptures, exhibition cases, and similar features.

3.3.10 Passenger. A ticketed occupant that has passed through security screening.

3.3.11 Potential Fuel Spill Points. The points on or around the aircraft or airport ramp where fuel can be released. These points include fueling hydrants, fuel servicing vehicles, fuel tank fill connections, fuel vent openings, fuel dump valves, etc.

Chapter 4, Airport Terminal Buildings, is replaced in its entirety as follows:

CHAPTER 4
AIRPORT TERMINAL BUILDINGS

4.1 General

4.1.1 *Airport terminal and concourse buildings* shall be of Type I or Type II construction as defined in Chapter 6 of this code.

4.1.1.1 Occupancy. The Occupancy Groups of *terminals* and *concourses* and portions thereof shall be assigned in accordance with the provisions of Chapters 3 and 4 of this code and shall comply with the mixed used and occupancy provisions of Section 508 of this code. High-hazard Group H occupancies are not permitted in *terminals* and *concourses*.

4.1.2 Interior finish materials shall be Class A or B in accordance with Chapter 8 of this code.

4.1.3 Aircraft fueling facilities and ramps shall be designed in accordance with NFPA 407 and Chapter 5 of this standard.

4.1.4 Below grade areas and blind spaces in *terminals* and *concourses* shall be protected against flammable fuel and vapor penetration or shall be mechanically ventilated to provide at least four complete air changes per hour. The mechanical ventilation system shall be installed in accordance with the *Denver Mechanical Code* and NFPA 91.

4.1.5 Glazing Material – Covered Openings Facing the Ramp.

4.1.5.1 Openings covered with glazing material that have the lowest part of the glazing material not less than 7 ft (2.1 m) above each finished floor level shall not be required to comply with Section 4.1.5.3.

4.1.5.2 Openings covered with glazing material listed for use in a fire barrier and installed in accordance with the listing shall not be required to comply with Section 4.1.5.3.

4.1.5.3 Where potential fuel spill points are located less than 100 ft (30.5 m) horizontally from glazing material–covered openings in *terminal* and *concourse* walls facing the airport ramp, they shall be provided with an automatically activated water spray system in accordance with Section 4.1.5.3.1 and 4.1.5.3.2 or an automatically activated, listed fire shutter system in accordance with its listing. *(see Annex A4.5.1.5 and Annex C.)*

4.1.5.3.1 Where an automatically activated water spray system(s) is provided, it shall be installed in accordance with NFPA 15.

4.1.5.3.2 The system shall be designed to provide a density of at least 0.25 gpm/ft2 [10.2 (L/min)/m2] over the exterior surface area of the glazing material.

4.2 Heating, Ventilating and Air-Conditioning

4.2.1 Heating, ventilating, and air conditioning systems shall be installed in accordance with Sections 4.2.2 through 4.2.6 and the applicable portions of the *Denver Mechanical Code* and the *Denver Fuel Gas Code*.

4.2.2 Air supply intake and exhaust openings for air-conditioning or ventilating equipment serving the *concourse building*, if located on the ramp side, shall be not less than 10 ft (3 m) above the grade level of the ramp and shall be at least 50 ft (15 m) from any point of flammable vapor release.

4.2.3 Openings to rooms that contain coal-, gas-, or oil-fired equipment or any other open-flame device and that face the ramp side of a *concourse* shall be above ramp grade and 50 ft (15 m) from any point of flammable vapor release.

4.2.4 Stacks or chimneys from a boiler, heater, or incinerator shall terminate 20 ft (6.1 m) minimum above ramp grade and above the roof of a *concourse*. Stacks or chimneys from boilers or heaters that use solid fuel or from any incinerator shall be fitted with double screening to control fly ash and sparks. Such stacks or chimneys shall be located so the outlet is 100 ft (30.5 m) minimum horizontally from any aircraft position or point of flammable vapor release.

Exceptions:

1. Natural gas direct vented appliances and direct-vented air handler heaters shall be vented in accordance with Section 503.8 of the *Denver Fuel Gas Code*. The vents and combustion air intakes shall not terminate less than 8 feet (2.4 m) above grade.
2. Natural gas radiant heaters serving interior apron levels shall be vented in accordance with Section 503.8 of the *Denver Fuel Gas Code*. The vents and combustion air intakes shall not terminate less than 8 feet (2.4 m) above grade.

4.2.5 Incinerators shall conform to the requirements of Chapter 4 of NFPA 82.

4.2.6 Commercial kitchen exhaust hood ventilation systems shall be in accordance with Chapter 6 of the *Denver Fire Code* and Chapter 5 of the *Denver Mechanical Code*.

4.3 Exits

4.3.1 *Airport terminal and concourse building* means of egress shall conform to the requirements of this code.

4.3.2 In addition to the exit signage requirements specified in this code, doors serving as exits that discharge onto an airport ramp and are provided solely for the purpose of meeting emergency egress requirements from public areas shall be placarded "Emergency Exit Only" in letters minimum of 2 in. (50 mm) high and ½-in. (13 mm) stroke.

4.4 Electrical.

4.4.1 All electrical installations shall be in accordance with NFPA 70.

4.4.2 Ventilation for transformer or electrical service rooms or vaults located on the ramp side of an airport *concourse* building shall be located in accordance with Section 4.2.2.

4.5 Fire Protection.

4.5.1 Sprinkler Systems

4.5.1.1 Terminals and *concourses* shall be provided with an automatic sprinkler system installed in accordance with Chapter 9, Section 903 of the *Denver Fire Code* as amended and per the following (see Annex A4.5.1.5 of NFPA 415):

1. *Passenger* areas shall be classified as Ordinary Hazard Group 1 Occupancy.
2. Baggage, package, and mail-handling areas shall be classified as Ordinary Hazard Group 2 Occupancy.
3. Other areas of the *airport terminal and concourse buildings* shall be classified in accordance with Chapter 5 of NFPA 13 based on the occupancy and function of the area.

4. Utility tunnel and utility spaces or rooms shall be classified as Ordinary Hazard Group 1 Occupancy.
5. Baggage handling equipment tunnels shall be classified as Ordinary Hazard Group 2 Occupancy.
6. Automatic sprinkler systems in accordance with NFPA 409 shall be provided at aircraft loading positions under *concourse* canopies and roofed recesses that substantially cover the aircraft
7. Sprinkler protection for new or modified electrical rooms shall comply with Section 903.3.10 of the *Denver Fire Code*.
8. Unless exempted by Section 903.1.1.1 of the *Denver Fire Code*, new and modified communication and data rooms shall be provided with automatic sprinkler protection.

4.5.2 Fire Alarm and Emergency Communications Systems.

4.5.2.1 Terminals and *concourses* shall be provided with a fire alarm and emergency communication systems installed in accordance with Sections 4.5.2.1.1 through Section 4.5.2.7 and Chapter 9 of the *Denver Fire Code*.

4.5.2.1.1 Smoke detection shall be spaced not to exceed 2,500 square feet. (232 m^2) per detector with roof/ceilings over 25 feet (7.6 m) above an occupied floor.

4.5.2.1.2 Manual pull station shall be provided at required exits and each zone shall be annunciated individually or by zone as *approved*. There shall be 200 linear ft (61 m) maximum between pull stations within public areas of *terminals* and *concourses*. Location of manual pull stations throughout all other areas shall comply with NFPA 72.

4.5.2.1.3 Smoke detection shall be provided as follows:

1. In each electrical, transformer, telephone equipment or similar room, elevator machine rooms, and in all elevator lobbies.
2. In the outlet of fans used for pressurization of stairways, hoistways and refuge areas. Activation of these smoke detectors shall be annunciated as a supervisory signal in accordance with Section 4.5.2.3 and not as an alarm signal.
3. In elevator hoistways and at the top of pressurized stair enclosures and in elevator hoistways where required by this code. These devices shall initiate an alarm condition and illuminate the respective indicator at the building annunciator panel. This alarm condition shall not initiate occupant notification or the smoke control system.
4. Smoke detectors shall be installed in supply air systems with a design capacity greater than 2,000 cfm (0.9 m^3/s), in the supply air duct or plenum downstream of any fan. Activation of these smoke detectors shall be annunciated as a supervisory signal in accordance with Section 4.5.2.3 and not as an alarm signal.

5. In the main return air and exhaust air plenum of each air-handling system having a capacity greater than 2,000 cfm (0.9 m^3/s) in accordance with Section 606.2.1 of the Denver Mechanical Code. Where multiple air-handling systems share common supply or return air ducts or plenums with a combined capacity greater than 2,000 cfm (0.9 m^3/s), smoke detectors shall be provided in accordance with Section 606.2.2 of the Denver Mechanical Code. Detectors shall be listed for the air velocity in which they are installed. Activation of these smoke detectors shall be annunciated as a supervisory signal in accordance with Section 4.5.2.3 and not as an alarm signal.

   Exception: Smoke detectors are not required for automatic shut-off of evaporative coolers or units that supply un-tempered 100% outside air.

6. In inline tenant spaces and similar rooms adjoining *terminals* and *concourses*:

   6.1 Smoke detectors shall be installed on the tenant side on inline tenant spaces at each opening into the *terminal* or *concourse* and at each exist from the tenant space. For openings wider than 30 lineal ft (9.1 m), an additional detector shall be provided for each 30 lineal ft (9.1 m) or fraction thereof.

   6.2 Electrical equipment rooms that are equipped with fire sprinklers shall be equipped with a smoke detector(s); rooms without fire sprinkler protection the room shall be equipped with smoke and heat detector(s).

   6.3 Manual pull stations shall be required at all kitchens exits.

4.5.2.2 Fire alarm system central station monitoring shall be provided by an *approved* radio communicator transmitting directly to DFD dispatch in accordance with Section 917 of the *Denver Fire Code*.

4.5.2.3 Fire alarm system signal annunciation shall be by a computer-based graphic display. All existing and new airport *terminal and concourse buildings* fire alarm devices shall be integrated into the system. Annunciation of all building fire alarm, trouble and supervisory signals shall be displayed at the computer graphic displays and all fire alarm control units. Local annunciators shall also be provided for pre-action and clean agent extinguishing systems in accordance Section 907 of the *Denver Fire Code*.

4.5.2.4 Airport *terminal and concourse buildings* shall be provided with an emergency voice/alarm communication system fully integrated into the complex-wide Emergency Communication System (ECS), incorporating audible, visual, and textual notification appliances. In areas accessible to the public, DEN-controlled flight, gate, baggage, and multi-use information display systems (FIDS, GIDS BIDS, and MUFIDS, respectively), and DEN-controlled visual paging monitors shall display ECS messages. Non-DEN-controlled video displays, DEN CATV, and tenant audio systems in public areas shall be shunted upon activation of the emergency communication system.

Exception: Non-DEN-controlled video displays exceeding 60 inches (25.4mm) measured diagonally shall display ECS messages when required by the *fire code official*.

4.5.2.4.1 The emergency voice alarm evacuation message alert tone shall be a slow whoop or as *approved* by the *fire code official*. The evacuation message shall be manually initiated from the FCC.

4.5.2.5 The public areas of airport *terminal* and *concourse* buildings shall be provided with pre-signal fire alarm notification in accordance with NFPA 72.

4.5.2.6 A firefighter radio communication system shall be provided in accordance with Section 510 of the *Denver Fire Code* for an Emergency Responder Radio Enhancement Coverage System (RES)

Exception: With prior approval from the *fire code official*, firefighter radio communication systems are permitted to be integrated into the existing DEN Public Safety Communications Network.

4.5.2.7 Two-way hardwired Fire Department telephone communication system shall also be provided by fixed handsets in accordance with Section 907.2.13.2 of the *Denver Fire Code*.

4.5.3 Fire Hydrants. Fire hydrants shall be provided on both the ramp and the street sides of *terminals* and *concourses*. Such hydrants shall be located so that no portion of the *terminal* and *concourse* building is more than 500 ft (152.4 m) from a hydrant.

4.5.4 Standpipe and Hose Systems. Standpipe and hose systems shall be provided for all *airport terminal and concourse buildings* three stories or more [35 ft (10.7 m)] in height or 100 ft (30.5m) in shortest horizontal dimension. Standpipe and hose systems shall be installed in accordance with NFPA 14.

4.5.4.1 Class I standpipe systems shall be provided in buildings protected throughout by an *approved automatic sprinkler system*. Each 2 ½-inch (63.5 mm) hose connection shall be equipped with a 2 ½-inch × 1 ½-inch (63.5 mm × 38 mm) reducer and cap.

4.5.4.2 Class III standpipe systems shall be provided in non-sprinklered buildings. The exceptions in NFPA 14, for Class III systems shall be applicable to this requirement.

4.5.5 Water Supply. Water supply from public or private sources shall be adequate to supply maximum calculated sprinkler demand plus a minimum of 500 gpm (1893 L/min) for hose streams. The supply shall be available at the rate specified for a period of at least 1 hour.

4.5.5.1 Main sizes shall be hydraulically calculated based on the total domestic and fire protection requirements. Mains shall be not less than 8 inches (203 mm) in diameter except that laterals shall be permitted to be 6 inches (152 mm) in diameter if not over 200 feet (61 m) long.

4.5.5.2 Hydrants shall be readily accessible to fire-fighting vehicles traveling on surfaces adequate for supporting such vehicles.

4.5.5.2.1 Hydrants shall be listed.

4.5.5.2.2 Hydrants shall be located or protected to prevent mechanical or vehicular damage, including taxiing aircraft.

4.5.5.2.3 Hydrants recessed into the ground shall have identifiers in the pavement to assist in their prompt location at night and by personnel who might not be familiar with the location of the hydrants.

4.5.5.3 Water supply systems shall be regularly tested to ensure operation.

4.5.6 Portable Fire Extinguishers. Portable fire extinguishers shall be provided throughout all airport *terminal* and *concourse* buildings in accordance with NFPA 10.

Section 4.6 smoke control for airport terminal buildings is added as follows:

SMOKE CONTROL FOR AIRPORT TERMINAL AND CONCOURSE

4.6 Smoke control for airport terminal and concourse. Smoke control systems shall comply with Section 4.6.1 through 4.6.7

4.6.1 Requirements. *Terminals* and *concourses* shall be provided with smoke control. Smoke exhaust locations shall be configured to prevent accumulation of smoke in any area of the *terminals* and *concourses*. Smoke control systems shall be activated in accordance with Section 4.6.6. Where a space or corridor exceeds 20 feet (6.10m) in length and is connected to an atrium or area that has separate smoke control zones, supply air shall be provided to the space or corridor at the farthest location from the point of connection to the atrium or area. Tenant spaces less than 5,000 square feet (465m^2) and open to the *terminals* or *concourses* shall be incorporated into the *terminal* or *concourse* smoke control exhaust operating sequence and shall be separated by an 18-inch draft curtain with closely spaced sprinklers in accordance with Section 9.3.5 of NFPA 13 and smoke detections in accordance with Section 4.5.2 in the tenant space.

Exceptions:

1. Ramp service and nonpublic ramp level tenant areas of airport *concourse* buildings.
2. Unenclosed bag handling tenant areas of the *terminal* and *concourses*.
3. Permanently fixed aircraft loading walkways when separated by one-hour rated assemblies.

4.6.2 Terminal and concourse design criteria. The smoke control equipment for *terminals* and *concourses* shall be independent of that serving tenant spaces of 5,000 square feet (465 m^2) or more. The *terminal* and *concourse* smoke removal system shall provide the greater of 4 air changes per hour or 20,000 cfm (9.4 m^3/s) from each smoke zone.

4.6.3 Large tenant spaces and similar room design criteria. All continuous tenant spaces adjoining the *terminal* and *concourses* which exceed 5,000 square feet (465m^2) shall be a separate smoke control zone per Section 4.6.2. The smoke removal system shall provide a minimum of 4 air chances per hour, with an appropriate source of make-up air. Smoke zones shall be separated by a smoke partition or an 18-inch draft curtain with closely spaced sprinklers installed in accordance with Section 9.3.5 of NFPA 13 and smoke detectors in accordance with Section 4.5.2 in the tenant space.

4.6.4 Terminal and concourse elevators and stairs. Exit stair enclosures, elevator hoistways and exit passageways shall be pressurized in accordance with Section 909 of the *Denver Fire Code*.

Exceptions:

1. As permitted by the *building and fire code officials*.
2. Elevators and enclosed stairways from the transitway station.
3. Pressurized stairs, elevators and exit passageways shall not be required in existing *terminals* and *concourses* and additions to existing terminal and *concourse* where this system does not presently exist.

4.6.5 Baggage handling equipment tunnels and automated ground transportation system (AGTS). The baggage handling equipment and AGTS tunnel smoke control exhaust systems shall be sized to provide a minimum of 4 air changes per hour.

4.6.6 System initiation. Terminal and *concourse* smoke exhaust shall be initiated when any automatic device (e.g. suppression water flow or automatic detection), activates within a smoke zone. Manual activation of smoke control equipment shall be provided on all fire command center fire alarm system workstations.

Exceptions:

1. Activation of any two (2) automatic detection devices in the same smoke zone shall initiate the smoke control sequence for the following: Terminal Levels 5 and 6 and normally occupied public areas of *Concourse* Level 2. Operation of a manual pull station shall function only as a second verification device to initiate the smoke control sequence for the smoke zone containing the initial automatic device in alarm. A suppression water flow can function as a single automatic activation device.
2. Manual activation from the FCC workstations shall be the only means permitted to initiate the smoke control exhaust sequence for the *terminal* atrium, baggage handling equipment tunnels, and AGTS tunnel.

In *terminal* and *concourses*, stair, and elevator hoistway enclosure vertical pressurization shall be initiated by activation of any single alarm-initiation device.

4.6.7 Adjacent zones. Where multiple smoke exhaust zones for the *terminal* and *concourses* are provided, only the smoke exhaust system for the zone in alarm shall be automatically activated. Smoke exhaust systems for adjacent zones shall not automatically activate but may be manually activated.

4.7 Delayed Egress for Airport Terminal and Concourse Buildings

4.7.1 Requirements. Where *airport terminal and concourse buildings* are provided with delayed egress systems, these systems shall be designed and installed in accordance with this Section and the airport's Design Standards, Article 1, Section 1 of the Denver Building Code, Section 1010.2.13 of the *Denver Commercial Building Code*, and policies as *approved* by the *building and fire code officials.*

4.7.2 Delayed egress. Other than in Groups H occupancies, delayed egress locking systems shall be permitted on doors providing access from *airport terminal and concourse buildings* to the restricted areas of the airport.

4.7.2.1 Delayed egress sequence of operation. The fire alarm system shall interface with all delayed egress systems and unlock these doors based on an *approved* sequence of operation. All doors shall be capable of being unlocked manually at the *fire command center* fire alarm system workstation.

4.7.2.2 Delayed egress lock power. All delayed egress locks shall release upon power loss.

4.7.2.3 Delayed egress lock release. The delayed egress locks shall initiate the irreversible unlocking process after the releasing device has been activated for 3 seconds. Once the unlocking process is initiated, the delayed egress lock shall release in 15 seconds.

4.7.2.4 Delayed egress lock relocking. Relocking of the doors shall be permitted through a centralized system after the fire alarm system has been reset.

4.7.2.5 Delayed egress lock signage. All doors provided with delayed egress locks shall have *approved* signage providing door opening instructions.

4.7.2.6 Delayed egress lock emergency lighting. All new doors provided with delayed egress locks shall be provided with emergency lighting.

4.7.2.7 Delayed egress lock listing. Components for the delayed egress lock shall be listed as a complete assembly.

4.8 Emergency Power

4.8.1 Emergency Power. *Airport terminal and concourse buildings* shall be provided with an emergency power source. Emergency power shall be provided by dual utility services or other *approved* means complying with NFPA 70, (NEC) Article 700 and the *Denver Fire Code*. Conditions of utility service availability and system power transfer shall be monitored by the fire alarm system.

4.8.2 The following equipment shall be provided with emergency power:

1. Mechanical equipment for smoke control.
2. Egress and exit lighting.
3. Elevator power and all associated elevator equipment.
4. Fire alarm and detection systems.
5. Fire pump/jockey pump.
6. Emergency communication systems.
7. Emergency Responder Radio Enhancement coverage Systems (RES)
8. Two-way Hardwired Fire Department Telephone Communication System
9. Two-way Communication System Section 1009.8 of *this code.*

Chapter 5, Aircraft fueling ramp drainage, is replaced in its entirety with the follow:

CHAPTER 5
AIRCRAFT FUELING RAMP DRAINAGE

5.1 Aircraft Fueling Ramp Slope and Drain Design.

5.1.1 *Aircraft fueling ramps* shall slope away from *concourses*, aircraft hangars, aircraft loading walkways, or other structures, with a minimum grade of 1 percent (1:100) for the first 50 feet (15 m). Beyond this distance, the ramp slope to drainage inlets shall be permitted to be reduced to a minimum of 0.5 percent (1:200).

5.1.2 Aircraft fueling ramp drainage as specified herein shall be accomplished by the provisions of Section 5.1.1 in conjunction with the following:

1. The use of drain inlets with connected piping
2. The use of open-grate trenches

5.1.3 Drainage inlets, where provided, shall be located a minimum of 50 feet (15 m) from structures outlined in 5.1.1.

5.1.4 The drainage system of any aircraft fueling ramp shall be so designed that the fuel or its vapor cannot enter into the drainage system of buildings, areas utilized for automobile parking, public or private streets, or the public side of airport *terminal buildings* or aircraft hangar structures. In no case shall the design allow fuel to collect on the aircraft fueling ramp or adjacent ground surfaces where it could constitute a fire hazard.

5.1.5 The final separator or interceptor for the entire airport drainage system shall be designed to allow disposal of combustible or flammable liquids into a safely located, *approved* containment facility.

5.1.6 Grates and drain covers shall be removable to facilitate cleaning and flushing.

5.1.7 If open-grate drainage trenches are used as a collection means, such open trenches, including branches, shall not be over 125 feet (38 m) in length with a minimum interval of 6 feet (1.8 m) between open-trench sections to act as fire stops. Each 125 feet (38 m) section shall be individually drained through underground piping. Open trenches shall not be used where they are in the line of pedestrian or passenger traffic.

5.1.8 Underground piping and components used in drainage systems shall be noncombustible and inert to fuel.

5.2 Drain and Separator Maintenance

5.2.1 Periodic maintenance checks shall be conducted of all ramp drainage systems and interceptors to ensure that they are clear of obstructions and function properly.

5.2.2 Large-volume flushing with water shall be conducted through appropriate drainage elements to purge residual fuel from these drainage elements after any large fuel spill on the aircraft fueling ramp enters the drainage system.

CHAPTER 6
AIRCRAFT LOADING WALKWAYS

Delete Sections 6.1 through 6.2.10 in their entirety and substitute as follows:

6.1 Design Basics

6.1.1 Each aircraft loading walkway installation shall be designed to provide a safe means of egress from the aircraft for a period of 5 minutes under fire exposure conditions equivalent to a free-burning jet fuel spill fire.

6.1.2 Protection of the aircraft loading walkway shall be accomplished by one of the following methods:

1. Construction design meeting the requirements of Sections 6.1 through 6.4
2. Fixed fire protection meeting the requirements of Sections 6.1, 6.2, and 6.5

6.1.3 Aircraft Loading Walkways on Grade Level. Permanently fixed aircraft loading walkways on grade level shall be of Type I or II-A construction as defined in Chapter 6 of this code. All exterior doors shall have opening protection with a fire protection rating of not less than ¾ hour. Doors shall be self-closing and shall swing outward. Entrance doors between walkways and the *airport concourse buildings* shall swing into the *airport concourse building* and be equipped with automatic closure and panic hardware.

6.1.4 Other Aircraft Loading Walkways. Both fixed and moveable aircraft loading walkways shall be constructed in accordance with Section 6.2 and in compliance with FAA Circular AC 150/5220-12C. Structural loading shall comply with Chapter 16 of this code. All walkways shall be provided with a permanently affixed placard certifying compliance with NFPA 415. These requirements shall not apply to Sections 6.2.1 through 6.2.3.

6.2 Requirements for All Aircraft Loading Walkways.

6.2.1 Interior finish other than textiles of walls, ceilings, and walkways shall be Class A as defined in Section 803.1.1 of this code.

6.2.2 Interior textile finish of walls and ceilings in walkways shall be in accordance with Sections 803.5 and 803.6 of this code.

6.2.3 Interior floor finish in walkways shall be Class I as defined in Section 804 of this code.

6.2.4 During a ramp fire emergency, walkway interiors shall have a positive air pressure delivered from a source that shall remain uncontaminated.

6.2.5 Any source of negative air pressure in the aircraft loading walkway shall be automatically shut down in the event of a fire emergency.

6.2.6 Any door in the egress path through the loading walkway to the *terminal building* shall swing in the direction of egress from the aircraft toward the *terminal building* and shall be equipped with panic hardware on the aircraft side.

6.2.7 Where loading walkways are provided, the walkway, including the bumpers, curtains, and canopies, shall be seated according to the manufacturer's instruction and training whenever the walkway is in service.

6.2.8 Cab and Rotunda Slat Curtains.

6.2.8.1 Cab slat curtains and rotunda slat curtains shall meet the requirements of Section 6.4.8 by one of the following methods:

1. Intrinsic structural features
2. Fire-resistive coatings
3. Automatically activated water cooling systems in accordance with Section 6.5.2.
4. Automatically activated fie curtains.
5. Local application of a foam system in accordance with 6.5.3 under the cab and rotunda that is automatically activated and covers an area extending 15 feet (4.6 m) beyond the perimeter of the cab and rotunda. This shall supersede the 10 feet (3 m) criteria of 6.5.3.

6.2.8.2 When the rotunda is located more than 50 feet (15 m) from the fuel fill or fuel vent point of aircraft and the rotunda slot curtain is of noncombustible construction, 6.2.8.1 shall not apply.

6.2.9 Emergency lights shall be installed in all aircraft loading walkways in accordance with this code.

6.2.10 The minimum obstruction-free width of walking surface shall be 36 inches (914 mm). Changes in elevation between telescoping sections of the loading walkway's walking surface shall not exceed 1 in 20 slope when the loading walkway is level. Existing loading walkways shall be permitted to be continued in service.

6.2.11 Sprinkler System. Permanently fixed aircraft loading walkways greater than 20 feet (6.10 m) in length or at grade level shall be provided with an automatic sprinkler system in accordance with Section 4.5.1.1(1) of this appendix.

6.2.12 Fire Alarm and Emergency Communications System. Permanently fixed aircraft loading walkways greater than 20 feet (6.10 m) in length or at grade level shall be provided with automatic fire alarm visible notification and Emergency Communication System (ECS) audible notification. Each permanently fixed aircraft loading walkway shall be its own notification zone.

2016 NFPA 415 Sections 6.3 through 6.5.3 are incorporated by reference and remain unchanged.

Add Chapter 7 Subsurface Tunnels as follows:

CHAPTER 7
SUBSURFACE TUNNELS

Section 7.1 General. All subsurface tunnels shall comply with the provisions of Sections 7.2 through 7.9.

Section 7.2 Sprinkler System Design Occupancy Classifications. Baggage Handling Equipment Tunnels (Ordinary Hazard Group 2) and Utility Tunnels (Ordinary Hazard Group I) shall be sprinklered throughout. Train Service Automated Ground Transportation System (AGTS) Tunnels (Ordinary Hazard Group 2) shall be sprinklered at the transit stations as *approved* by the Building Department and Fire Department.

Section 7.3 Smoke Removal System. A smoke removal system shall be provided per Section 4.6.5.

Section 7.4 Life Safety System. All life safety systems shall be provided with emergency power. Utility and baggage tunnels shall be provided with visible (strobes) and textual visible notification appliances for emergency alarm and ECS integration where applicable. Device locations shall be as *approved* by the *fire code official*.

Section 7.5 Exits. A walkway with a minimum 74-inch width (1.9 m) [2 exit path widths of 22 inches (56 cm) each, plus 12 inches (30 cm) wall clearance, and an 18-inch (46 cm) platform edge clearance] shall be provided within all people-mover transit tunnels. Exit doors into adjacent protected tunnels shall be provided at a maximum spacing of 200 feet (61 m) and shall be monitored by the airport operations center.

Exception: The walkway width and exit door spacing may be modified based upon an exit study submitted by the Design Professional and *approved* by the Agency and Denver Fire Department.

Section 7.6 Separation. A minimum 2-hour *fire-resistance-rated fire barrier* in accordance with Section 707 of this code shall be provided between tunnels.

Section 7.7 Transit Station Separation. The transitway shall be separated from the transit station by minimum two-hour fire-resistance-rated noncombustible walls with 1½-hour *fire-resistance-rated* doors. Windows within these walls shall be *approved* 1½-hour *fire-resistance-rated* windows.

> **Exception:** Fire-resistance-rated window openings of ¾-hour may be used when the window assembly is protected with *approved* directional sprinkler heads 6 feet on center (1.83 m) both sides of glass.

Section 7.8 Transit Systems Construction Guide. Fixed Guideway Transit Systems NFPA 130 shall be used as a construction guide unless specifically covered by this Code.

Section 7.9 Transitway Tunnel. The transitway tunnel shall be used exclusively for the movement of passengers between stations.

2016 NFPA 415 Annexes A, B, C, D are incorporated by reference and remain unchanged.

Appendix T 2021 International Swimming Pool and Spa Code Section 305 is added as modified. The remaining sections of the 2021 International Swimming Pool and Spa Code are not adopted.

APPENDIX T
INTERNATIONAL SWIMMING POOL AND SPA CODE

Section 305 of the 2021 International Swimming Pool and Spa Code is amended as follows:

SECTION 305
BARRIER REQUIREMENTS

305.1 General. The provisions of this section shall apply to the design of barriers for pools and spas. These design controls are intended to provide protection against the potential drowning and near drowning by restricting access to such pools or spas. These requirements provide an integrated level of protection against potential drowning through the use of physical barriers and warning devices. All portions of the water surface shall be directly visible from any location within the pool barrier.

Exceptions:

1. Spas and hot tubs with a lockable *safety cover* that complies with ASTM F 1346.
2. Swimming pools with a powered *safety cover* that complies with ASTM F 1346.

305.1.1 Construction fencing required. The construction sites for in-ground swimming pools and spas shall be provided with construction fencing to surround the site from the time that any excavation occurs up to the time that the permanent barrier is completed. The fencing shall be not less than 4 feet (1219 mm) in height.

305.2 Outdoor swimming pools and spas and indoor swimming pools. Outdoor pools and spas and indoor swimming pools shall be surrounded by a barrier that complies with Sections 305.2.1 through 305.7.

305.2.1 Barrier height and clearances. Barrier heights and clearances shall be in accordance with all the following:

1. The top of the barrier shall be not less than 60 inches (1524 mm) above grade where measured on the side of the barrier that faces away from the pool or spa. Such height shall exist around the entire perimeter of the barrier and for a distance of 3 feet (914 mm) measured horizontally from the outside of the required barrier.
2. The vertical clearance between grade and the bottom of the barrier shall not exceed 2 inches (51 mm) for grade surfaces that are not solid, such as grass or gravel, where measured on the side of the barrier that faces away from the pool or spa.
3. The vertical clearance between a surface below the barrier to a solid surface, such as concrete, and the bottom of the required barrier shall not exceed 4 inches (102 mm) where measured on the side of the required barrier that faces away from the pool or spa.
4. Where the top of the pool or spa structure is above grade, the barrier shall be installed on grade or shall be mounted on top of the pool or spa structure. Where the barrier is mounted on the top of the pool or spa, the vertical clearance between the top of the pool or spa and the bottom of the barrier shall not exceed 4 inches (102 mm).

305.2.2 Openings. Openings in the barrier shall not allow passage of a 4-inch-diameter (102 mm) sphere.

305.2.3 Solid barrier surfaces. Solid barriers that do not have openings shall not contain indentations or protrusions that form handholds and footholds, except for normal construction tolerances and tooled masonry joints.

305.2.4 Mesh fence as a barrier. Mesh fences, other than chain link fences in accordance with Section 305.2.7, shall be installed in accordance with the manufacturer's instructions and shall comply with the following:

1. The bottom of the mesh fence shall be not more than 1 inch (25 mm) above the deck or installed surface or grade.
2. The maximum vertical clearance from the bottom of the mesh fence and the solid surface shall not permit the fence to be lifted more than 4 inches (102 mm) from grade or decking.
3. The fence shall be designed and constructed so that it does not allow passage of a 4-inch (102mm) sphere under any mesh panel. The maximum vertical clearance from the bottom of the mesh fence and the solid surface shall not be more than 4 inches (102 mm) from grade or decking.
4. An attachment device shall attach each barrier section at a height not lower than 45 inches (1143 mm) above grade. Common attachment devices include, but are not limited to, devices that provide the security equal to or greater than that of a hook-and-eye-type latch incorporating a spring-actuated retaining lever such as a safety gate hook.
5. Where a hinged gate is used with a mesh fence, the gate shall comply with Section 305.3.
6. Patio deck sleeves such as vertical post receptacles that are placed inside the patio surface shall be of a nonconductive material.
7. Mesh fences shall not be installed on top of on-ground *residential* pools.

[DPHE] 305.2.4.1 Setback for mesh fences. The inside of a mesh fence shall be not closer than 48 inches (1219 mm) to the nearest edge of the water of a pool or spa.

305.2.5 Closely spaced horizontal members. Where the barrier is composed of horizontal and vertical members and the distance between the tops of the horizontal members is less than 45 inches (1143 mm), the horizontal members shall be located on the pool or spa side of the fence. Spacing between vertical members shall not exceed 1¾ inches (44 mm) in width. Where there are decorative cutouts within vertical members, spacing within the cutouts shall not exceed 1¾ inches (44 mm) in width.

305.2.6 Widely spaced horizontal members. Where the barrier is composed of horizontal and vertical members and the distance between the tops of the horizontal members is 45 inches (1143 mm) or more, spacing between vertical members shall not exceed 4 inches (102 mm). Where there are decorative cutouts within vertical members, the interior width of the cutouts shall not exceed 1¾ inches (44 mm).

305.2.7 Chain link dimensions. The maximum opening formed by a chain link fence shall be not more than 1¾ inches (44 mm). Where the fence is provided with slats fastened at the top and bottom which reduce the openings, such openings shall be not more than 1¾ inches (44 mm).

305.2.8 Diagonal members. Where the barrier is composed of diagonal members, the maximum opening formed by the diagonal members shall be not more than 1¾ inches (44 mm). The angle of diagonal members shall be not greater than 45 degrees (0.79 rad) from vertical.

305.2.9 Clear zone. Where equipment, including pool equipment such as pumps, filters and heaters, is on the same lot as a pool or spa and such equipment is located outside of the barrier protecting the pool or spa, such equipment shall be located not less than 36 inches (914mm) from the outside of the barrier.

[DPHE] 305.2.10 Poolside barrier setbacks. The pool or spa side of the required barrier shall be not less than 48 inches (1219 mm) from the water's edge.

305.3 Doors and gates. Doors and gates in barriers shall comply with the requirements of Sections 305.3.1 through 305.3.3 and shall be equipped to accommodate a locking device. Pedestrian access doors and gates shall open outward away from the pool or spa, shall be self-closing and shall have a self-latching device.

305.3.1 Utility or service doors and gates. Doors and gates not intended for pedestrian use, such as utility or service doors and gates, shall remain locked when not in use.

305.3.2 Double or multiple doors and gates. Double doors and gates or multiple doors and gates shall have not fewer than one leaf secured in place and the adjacent leaf shall be secured with a self-latching device.

305.3.3 Latch release. For doors and gates in barriers, the door and gate latch release mechanisms shall be in accordance with the following:

1. Where door and gate latch release mechanisms are accessed from the outside of the barrier and are not of the self-locking type, such mechanism shall be located above the finished floor or ground surface in accordance with the following:

    1.1. At public pools and spas, not less than 52 inches (1219 mm) and not greater than 54inches (1372 mm).

    1.2. At residential pools and spas, not less 54 inches (1372 mm).

2. Where door and gate latch release mechanisms are of the self-locking type such as where the lock is operated by means of a key, an electronic opener or the entry of a combination into an integral combination lock, the lock operation control and the latch release mechanism shall be located above the finished floor or ground surface in accordance with the following:

    2.1. At public pools and spas, not less than 34 inches and not greater than 48 inches (1219 mm).

    2.2. At residential pools and spas, at not greater than 54 inches (1372 mm).

3. At private pools, where the only latch release mechanism of a self-latching device for a gate is located on the pool and spa side of the barrier, the release mechanism shall be located at a point that is at least 3 inches (76 mm) below the top of the gate.

305.3.4 Barriers adjacent to latch release mechanisms. Where a latch release mechanism is located on the inside of a barrier, openings in the door, gate and barrier within 18 inches (457 mm) of the latch shall not be greater than 1/2 inch (12.7 mm) in any dimension.

305.4 Structure wall as a barrier. Where a wall of a dwelling or structure serves as part of the barrier and where doors, gates or windows provide direct access to the pool or spa through that wall, one of the following shall be required:

1. Operable windows having a sill height of less than 48 inches (1219 mm) above the indoor finished floor, doors and gates shall have an alarm that produces an audible warning when the window, door or their screens are opened. The alarm shall be *listed* and *labeled* as a water hazard entrance alarm in accordance with UL 2017.

   1.1 In dwellings not required to be Accessible units, Type A units or Type B units, the operable parts of the alarm deactivation switches shall be located at not less than 54 inches (1372 mm) above the finished floor.

   1.2 In dwellings that are required to be Accessible units, Type A units or Type B units, the operable parts of the alarm deactivation switches shall be located not greater than 54 inches (1372 mm) and not less than 48 inches (1219 mm) above the finished floor.

   1.3 In structures other than dwellings, the operable parts of the alarm deactivation switches shall be located not greater than 54 inches (1372 mm) and not less than 48 inches (1220 mm) above the finished floor.

2. A *safety* cover that is *listed* and *labeled* in accordance with ASTM F 1346 is installed for the pools and spas.

3. An *approved* means of protection, such as self-closing doors with self-latching devices, is provided. Such means of protection shall provide a degree of protection that is not less than the protection afforded by Item 1 or 2.

305.5 On-ground residential pool structure as a barrier. An on-ground *residential* pool wall structure or a barrier mounted on top of an on-ground *residential* pool wall structure shall serve as a barrier where all the following conditions are present:

1. Where only the pool wall serves as the barrier, the bottom of the wall is on grade, the top of the wall is not less than 48 inches (1219 mm) above grade for the entire perimeter of the pool, the wall complies with the requirements of Section 305.2 and the pool manufacturer allows the wall to serve as a barrier.

2. Where a barrier is mounted on top of the pool wall, the top of the barrier is not less than 48 inches (1219 mm) above grade for the entire perimeter of the pool, and the wall and the barrier on top of the wall comply with the requirements of Section 305.2.

3. Ladders or steps used as means of access to the pool are capable of being secured, locked or removed to prevent access except where the ladder or steps are surrounded by a barrier that meets the requirements of Section 305.

4. Openings created by the securing, locking or removal of ladders and steps do not allow the passage of a 4-inch (102 mm) diameter sphere.

5. Barriers that are mounted on top of on-ground *residential* pool walls are installed in accordance with the pool manufacturer's instructions.

305.6 Natural barriers. In the case where the pool or spa area abuts the edge of a lake or other natural body of water, public access is not permitted or allowed along the shoreline, and required barriers extend to and beyond the water's edge not less than 18 inches (457 mm), a barrier is not required between the natural body of water shoreline and the pool or spa.

305.7 Natural topography. Natural topography that prevents direct access to the pool or spa area shall include but not be limited to mountains and natural rock formations. A natural barrier *approved* by the governing body shall be acceptable provided that the degree of protection is not less than the protection afforded by the requirements of Sections 305.2 through 305.5.

305.8 Means of egress. Outdoor public pools provided with barriers shall have means of egress as required by Chapter 10 of this code.

END OF 2022 DENVER COMMERCIAL BUILDING CODE

2022

DENVER EXISTING BUILDING CODE

COMPRISED OF

2022 DENVER AMENDMENTS

TO THE 2021 EDITION OF THE

INTERNATIONAL EXISTING BUILDING CODE (IEBC) AND APPENDICES

AS PUBLISHED BY THE INTERNATIONAL CODE COUNCIL (ICC)

The 2021 International Existing Building Code and all errata to that code is hereby adopted and incorporated by reference except for the amendments to each chapter and appendix of the 2021 International Existing Building Code specified below.

CHAPTER 1
SCOPE AND ADMINISTRATION

SECTION 101
GENERAL

Section 101.1 Title is replaced in its entirety as follows:

[A] 101.1 Title. These regulations shall be known as the *Denver Existing Building Code* (DEBC), hereinafter referred to as "this code".

Sections 101.4 Applicability and 101.5 Safeguards during construction are replaced in their entirety as follows:

Article 1, Section 1 of the *2022 Denver Building Code* shall govern.

Sections 103 through 117 are replaced in their entirety as follows:

Article 1, Section 1 of the *2022 Denver Building Code* shall govern.

CHAPTER 2
DEFINITIONS

SECTION 202
GENERAL DEFINITIONS

Section 202 General Definitions is amended by replacing item 2 for the definition of Substantial Structural Damage as follows:

2. The capacity of any vertical gravity load-carrying component, or any group of such components, whose tributary area is greater than 30 percent of the total area of the structure's floor(s) and roof(s) has been reduced more than 20 percent from its pre-damaged condition and the remaining capacity of such affected elements, with respect to all dead, live, and snow loads, is less than 75 percent of that required by the *Denver Commercial Building Code* for new buildings of similar structure, purpose and location.

CHAPTER 3
PROVISIONS FOR ALL COMPLIANCE METHODS

SECTION 302
GENERAL PROVISIONS

Section 302.2 Additional codes is replaced in its entirety as follows:

302.2 Additional codes. Any references to the International Building Code, International Energy Conservation Code, International Fire Code, International Fuel Gas Code, International Mechanical Code, International Plumbing Code, International Residential Code, and NFPA 70 means the Denver Commercial Building Code, Denver Energy Code, Denver Fire Code, Denver Fuel Gas Code, Denver Mechanical Code, Denver Plumbing Code, Denver Residential Code, and the Electrical Code of the City and County of Denver, respectively. *Alterations, repair, additions,* and *changes of occupancy* to, or relocation of, *existing buildings* and structures shall comply with the provisions for *alterations, repairs, additions,* and *changes of occupancy* or relocation, respectively, in this code and the *Denver Energy Code, Denver Fire Code, Denver Fuel Gas Code, Denver Mechanical Code, Denver Plumbing Code, Denver Residential Code* and Electrical Code of the City and County of Denver, respectively. Where provisions of the other codes conflict with the provisions of this code, the provisions of this code shall take precedence.

CHAPTER 5
PRESCRIPTIVE COMPLIANCE METHOD

SECTION 502
ADDITIONS

Section 502.4 Existing structural elements carrying gravity load is replaced as follows (exceptions to remain):

502.4 Existing structural elements carrying gravity load. Any existing gravity load-carrying structural element for which an *addition* and its related alterations cause an increase in the *load effects* due to design gravity loads of more than 5 percent shall be replaced or altered as needed to carry the gravity loads required by the *Denver Commercial Building Code* for new structures. Any existing gravity load-carrying structural element whose vertical load-carrying capacity is decreased as part of the *addition* and its related *alterations* shall be considered to be an altered element subject to the requirements of Section 503.3. Any existing element that will form part of the lateral load path for any part of the *addition* shall be considered to be an existing lateral load-carrying structural element subject to the requirements of Section 502.5.

SECTION 503
ALTERATIONS

Section 503.1 General is amended by adding exception 4 as follows:

4. In buildings constructed prior to March 26, 1994, two existing stairways within the same enclosure but completely separated from each other by rated construction in conformance with the requirements of the building code under which the building was last certified for occupancy (scissor stairs), including Modifications Under Special Circumstances and applicable retrofit ordinances, shall be considered two separate exits, provided:

    1. This scissor stair is currently recognized as two separate exits.
    2. This scissor stair has been used continuously as two separate exits since the building was certified for occupancy.
    3. The number of existing exits shall not be reduced.
    4. The doors leading into each side of the exit enclosure for scissor stairs shall not be required to meet the dimensional separation requirements of Section 1007.1.1 of the *Denver Commercial Building Code*.

Section 503.3 Existing structural elements carrying gravity load is replaced as follows (exceptions to remain):

503.3 Existing structural elements carrying gravity load. Any existing gravity load-carrying structural element for which an *alteration* causes an increase in *load effects* due to design gravity loads of more than 5 percent shall be replaced or altered as needed to carry the gravity loads required by the *Denver Commercial Building Code* for new structures. Any existing gravity load-carrying structural element whose gravity load-carrying capacity is decreased as part of the *alteration* shall be shown to have the capacity to resist the applicable *load effects* due to design gravity loads required by the *Denver Commercial Building Code* for new structures

Section 503.12 Roof diaphragms resisting wind loads in high-wind regions is deleted in its entirety.

CHAPTER 7
ALTERATIONS – LEVEL 1

SECTION 706
STRUCTURAL

Section 706.2 Addition or replacement of roofing or replacement of equipment is replaced as follows (exceptions to remain):

706.2 Addition or replacement of roofing or replacement of equipment. Any existing gravity load-carrying structural element for which an *alteration* causes an increase in *load effects* due to design gravity loads of more than 5 percent shall be replaced or altered as needed to carry the gravity loads required by the *Denver Commercial Building Code* for new structures.

Section 706.3.2 Roof diaphragms resisting wind loads in high-wind regions is deleted in its entirety.

CHAPTER 8
ALTERATIONS—LEVEL 2

SECTION 804
MEANS OF EGRESS

Section 804.4.1 Minimum number is replaced in entirety as follows:

804.4.1 Minimum number. Every story utilized for human occupancy on which there is a *work area* that includes exits or corridors shared by more than one tenant within the *work area* shall be provided with the minimum number of exits based on the occupancy and the occupant load in accordance with the *Denver Commercial Building Code*. In addition, the exits shall comply with Sections 804.4.1.1, 804.4.1.2, and 804.4.1.3

Section 804.4.1.3 Scissor stair is added as follows:

804.4.1.3 Scissor Stairs. In *buildings* constructed prior to March 26, 1994, two existing stairways within the same enclosure but completely separated from each other by rated construction in conformance with the requirements of the building code under which the *building* was last certified for occupancy (scissor stairs), including Modifications Under Special Circumstances and applicable retrofit ordinances, shall be considered two separate exits, provided:

1. This scissor stair is currently recognized as two separate exits.
2. This scissor stair has been used continuously as two separate exits since the building was certified for occupancy.
3. The number of existing exits shall not be reduced.
4. The doors leading into each side of the exit enclosure for scissor stairs shall not be required to meet the dimensional separation requirements of Section 1007.1.1 of the *Denver Commercial Building Code*.

Section 805.2 Existing structural elements carrying gravity loads. is replaced as follows (exceptions to remain):

805.2 Existing structural elements carrying gravity loads. Any existing gravity load-carrying structural element for which an *alteration* causes an increase in *load effects* due to design gravity loads of more than 5 percent shall be replaced or altered as needed to carry the gravity loads required by the *Denver Commercial Building Code* for new structures. Any existing gravity load-carrying structural element whose gravity load-carrying capacity is decreased as part of the *alteration* shall be shown to have the capacity to resist the applicable *load effects* due to design gravity loads required by the *Denver Commercial Building Code* for new structures.

CHAPTER 10
CHANGE OF OCCUPANCY

SECTION 1001
GENERAL

Section 1001.2.2.2 Denver Residential Code structures is added as follows:

1001.2.2.2 Denver Residential Code Structures. For the purposes of this code, structures that are currently under the scope of the *Denver Residential Code* shall be considered to have an existing *occupancy classification* of Group R-3.

SECTION 1011
CHANGE OF OCCUPANCY CLASSIFICATIONS

Section 1011.2.1 Fire sprinkler system is amended by deleting all 3 exceptions.

CHAPTER 11
ADDITIONS

SECTION 1103
STRUCTURAL

Section 1103.1 Additional gravity loads is replaced as follows (exception to remain):

1103.1 Additional gravity loads. Any existing gravity load-carrying structural element for which an *addition* and its related *alterations* cause an increase in *load effects* due to design gravity loads of more than 5 percent shall be replaced or altered as needed to carry the gravity loads required by the *Denver Commercial Building Code* for new structures. Any existing gravity load-carrying structural element whose gravity load-carrying capacity is decreased as part of the *addition* and its related *alterations* shall be considered to be an altered element subject to the requirements of Section 805.2. Any existing element that will form part of the lateral load path for any part of the *addition* shall be considered to be an existing lateral load-carrying structural element subject to the requirements of Section 1103.3.

CHAPTER 12
HISTORIC BUILDINGS

SECTION 1201
GENERAL

Section 1201.2 Report amended by adding an exception:

Exception: For projects not requiring preparation by an architect or engineer in Article 1, Section 133 of the Denver Building Code, and no such professional is involved with the project, the *building official* has the authority to allow the report to be prepared by a qualified licensed contractor who is responsible for the work.

SECTION 1203
FIRE SAFETY

Section 1203.9 Stairway railings is replaced in its entirety as follows:

1203.9 Stairway railings. Historically significant stairways as determined by the *building official* in consultation with the local preservation authority in the *Agency* or the State Historic Preservation Office, shall be permitted to be accepted without complying with the *handrail* and *guard* requirements. Existing *handrails* and *guards* at all *stairways* shall be permitted to remain, subject to approval by the *building official* and provided they are not structurally *dangerous*.

Exception: This provision shall not be applied to exterior metal fire escapes.

Section 1203.10.2 Guard openings is replaced in its entirety as follows:

1203.10.2 Guard openings. The spacing between existing intermediate railings or openings in existing ornamental patterns shall be accepted. Missing elements or members of a *guard* may be replaced to match historic features of the building or structure.

CHAPTER 13
PERFORMANCE COMPLIANCE METHODS

SECTION 1301
GENERAL

Section 1301.3.2 Compliance with other codes is amended by deleting the reference to the *International Property Maintenance Code*

Section 1301.6.11 Means of egress capacity and number is amended by adding the following sentence at the end of the first paragraph:

Existing scissor stairs shall be accepted as components in the means of egress when conforming to Section 503.1 Exception 4.

CHAPTER 14
RELOCATED OR MOVED BUILDINGS

SECTION 1401
GENERAL

Section 1401.2 Conformance is amended by deleting the reference to the *International Property Maintenance Code*

EXISTING BUILDING CODE APPENDICES
STATUS OF APPENDICES ON ADOPTION

Appendices and Sections thereof are Adopted or Not Adopted as part of this Code as noted in Appendix Adoption Table 1. Provisions in Appendices that are Adopted carry the full weight and mandatory enforceability of the Code.

EXISTING BUILDING CODE APPENDIX ADOPTION TABLE 1

APPENDIX	TITLE	STATUS
A	Guidelines for the Seismic Retrofit of Existing Buildings	Not Adopted
B	Supplementary Accessibility Requirements for Existing Buildings and Facilities	Section B101 is Adopted
C	Guidelines for the Wind Retrofit of Existing Buildings	Not Adopted
D	Board of Appeals	Not Adopted

END OF 2022 DENVER EXISTING BUILDING CODE

2022
DENVER RESIDENTIAL CODE

COMPRISED OF
2022 DENVER AMENDMENTS

TO THE 2021 EDITION OF THE

INTERNATIONAL RESIDENTIAL CODE (IRC) AND APPENDICES

AS PUBLISHED BY
INTERNATIONAL CODE COUNCIL (ICC)

The content of the sections in this Code that begin with letters designations are maintained by other City or State entities.

[CRS] Colorado Revised Statute
[DOTI] Department of Transportation and Infrastructure/Wastewater Management

The 2021 International Residential Code and all errata to that code is hereby adopted and incorporated by reference except for the amendments to each chapter and appendix of the 2021 International Residential Code specified below.

CHAPTER 1
ADMINISTRATION

SECTION R101
TITLE, SCOPE AND PURPOSE

[R] Section R101.1 Title is replaced in its entirety as follows:

R101.1 Title. These provisions shall be known as the Denver Residential Code (DRC) and shall be cited as such and will be referred to herein as "this code".

[R] Section R101.2 Scope is amended by replacing the Exceptions as follows:

Exception:

1. The provisions of Section 3114 of the Denver Commercial *Building Code* shall apply to the construction, *alteration*, movement, enlargement, replacement, *repair*, equipment, use, and occupancy of *manufactured homes*.

Section R101.2.1 Permitted uses in one-family dwelling units is added as follows:

R101.2.1 Permitted uses in one-family dwelling units. The following uses shall be permitted to be established in and regulated as one-family *dwelling units* in accordance with this code:

1. One *household*.
2. *Congregate living facility* with 10 or fewer occupants.
3. *Lodging house* with five or fewer *guestrooms* and 10 or fewer occupants.
4. *Care facility* with 5 or fewer persons receiving *custodial or medical care*.
5. *Live/work unit* complying with the requirements of Section 508.5 of the *Denver Building Code.*
6. A *Family child care home (FCCH)* complying with the provisions of Appendix AM of the *Denver Residential Code.*
7. Uses that are accessory and incidental to the uses listed above, including short-term rentals and home occupations.

Section R101.2.2 Permitted uses in a dwelling unit of a two-family dwelling is added as follows:

R101.2.2 Permitted uses in a dwelling unit of a two-family dwelling. The following uses shall be permitted to be established in and regulated as a dwelling unit of a two-family dwelling in accordance with this code:

1. One *household.*
2. *Care facility* with 5 or fewer persons receiving *custodial or medical care.*
3. *Live/work unit* complying with the requirements of Section 508.5 of the *Denver Commercial Building Code.*

4. A *Family child care home (FCCH)* complying with the provisions of Appendix AM of this code.
5. Uses that are accessory and incidental to the uses listed above, including short-term rentals and home occupations.

Section R101.2.3 Permitted uses in townhouse units is added as follows:

R101.2.3 Permitted uses in townhouse units. The following uses shall be permitted to be constructed and regulated as *townhouse units* in accordance with this code:

1. One *household.*
2. *Care facility* with 5 or fewer persons receiving *custodial or medical care*.
3. *Live/work unit* complying with the requirements of Section 508.5 of the *Denver Building Code.*
4. A *Family child care home (FCCH)* complying with the provisions of Appendix AM of the *Denver Residential Code.*
5. Uses that are accessory and incidental to the uses listed above, including short-term rentals and home occupations.

Section R101.2.4 Permitted uses in accessory structures is added as follows:

R101.2.4 Permitted uses in accessory structures. The following uses shall be permitted to be constructed and regulated as *accessory structures* in accordance with this code:

1. Home occupations.
2. Uses that are accessory and incidental to the *dwelling unit* or *townhouse unit* use, excluding short-term rentals.

Section R101.2.4.1 Living space in accessory structures is added as follows:

R101.2.4.1 Living space in accessory structures. *Living space* within *accessory structures* shall comply with the provisions of the code that are applicable to *dwellings*, *dwelling units*, and *residences*.

Exceptions:

1. The provisions of Section R306.1 and R306.2 shall not apply to *living space* within *accessory structures.*
2. *Accessory structures* with less than 200 square feet (18.6 m^2) of *living space* are not required to comply with Appendix AF.
3. Where not required by the building official based on site-specific constraints that do not allow for the explicit compliance of the living space or where alternative methods of code compliance are applicable.

Section R101.2.5 Complete and independent dwelling unit is added as follows:

Section R101.2.5 Complete and independent dwelling unit. A space in a structure will be deemed a dwelling unit if it contains all the following elements.

1. Provisions for living.
2. Provisions for cooking.
3. Provisions for sanitation.

4. Provisions for bathing.
5. Provisions for sleeping including a bedroom or other area designated for sleeping.
6. Independent egress to the exterior of the structure from an egress door.

Exception: A structure will be deemed one dwelling unit if it contains a *non-separated, continuous, and open access path* between spaces in a structure that would be considered more than one dwelling unit.

SECTION R102
APPLICABILITY

Section R102 Applicability is replaced in its entirety as follows:

R102.1 Repairs, Alterations, Additions, Change of Occupancy. The repair, alteration, addition, change of occupancy, and relocation of existing structures regulated by this code shall comply with Appendix AJ or the *Denver Existing Building Code*. Where the alteration, addition, or change of occupancy causes the structure to be changed to one outside the scope of this code, the provisions of the *Denver Existing Building Code* shall apply.

R102.2 Renaming of certain referenced codes. Any references to the International Building Code, International Energy Conservation Code, International Fire Code, International Fuel Gas Code, International Mechanical Code, International Plumbing Code, International Existing Building Code, and NFPA 70 means the Denver Commercial Building Code, Denver Energy Code, Denver Fire Code, Denver Fuel Gas Code, Denver Mechanical Code, Denver Plumbing Code, Denver Existing Building Code, and the Electrical Code of the City and County of Denver, respectively.

Sections R103 through R114 are deleted in their entirety and replaced as follows:

Article 1, Section 1 of the *2022 Denver Building Code* shall govern.

CHAPTER 2
DEFINITIONS

SECTION R202
DEFINITIONS

Section R202 is modified by adding or modifying the following definitions:

ALTERATION. Any construction, retrofit or renovation to an existing structure other than repair or addition that requires a permit. Also, a change in a building, electrical, gas, mechanical, HVAC, or plumbing system that involves an extension, addition or change to the arrangement, type or purpose of the original installation that requires a permit., including the addition or elimination of any door or window, space, or structures, the enlargement or installation of additional equipment. For the definition applicable in Chapter 11, see Section N1101.6.

BASEMENT. A *story* that is not a *story above grade* or a *crawl space*.

CARE FACILITY. A *building*, *structure*, or portion thereof occupied by persons who reside on a 24-hour basis in a supervised residential environment and receive *custodial care* and/or medical care. Examples of *care facilities* include: alcohol and drug centers, assisted living facilities, congregate care facilities, group homes, halfway houses, residential board and *care facilities*, and social rehabilitation facilities.

CELLAR. A *basement* constructed prior to 1990 that does not meet the minimum ceiling height requirements in Section R305 and does not contain living space.

CONGREGATE LIVING FACILITY. A *building*, *structure*, or portion thereof occupied by persons who do not jointly occupy the entirety of the *dwelling unit*. Residents have independent personal quarters that includes permanent provisions for sleeping, and may include provisions for living, eating, and either bathroom or kitchen facilities, but not both. Residents share bathroom or kitchen facilities, or both. Examples of congregate living facilities include boarding houses, convents, dormitories, fraternities and sororities, and monasteries. Congregate living facilities do not include *care facilities*.

CRAWL SPACE. A space without a floor between the ground and the first floor, or a *story* with a ceiling height of 5 feet or less that is not a *story above grade*.

CUSTODIAL CARE. Assistance with day-to-day living tasks; such as assistance with cooking, taking medication, bathing, using toilet facilities and other tasks of daily living. Custodial care includes person receiving care who have the ability to respond to emergency situations and evacuate at a slower rate and/or who have mental and psychiatric complications.

DEEP FOUNDATION. A *deep foundation* is a foundation element that does not satisfy the definition of a *shallow foundation*.

FAMILY CHILD CARE HOME (FCCH). A *dwelling unit* in which care is provided on a regular basis, for less than 24-hours at any time, in the provider's place of residence, for two or more children up to 18 years of age who are not directly related to the caregiver by blood, marriage, or adoption. The residents of the home under 12 years of age who are on the premises, in addition to all unrelated children who are on the premises for supervision, are counted as children receiving care.

A regular Family child care home provides care for no more than six children, with no more than two children under 2 ½ years of age. Care may be provided for two additional children six years of age and older who are enrolled in the first grade or above. The child-to-provider ratio shall be not more than six children per provider.

A large Family child care home provides care for no more than a total of 12 children less than 18 years of age, with no more than three children under 2 ½ years of age. There shall be a minimum of two providers.

FIRE SEPARATION DISTANCE. The distance measured from the *building* face to one of the following:

1. To the closest interior *lot line.*
2. To the center of a street, alley, or *public way*.
3. To an imaginary line between two *buildings* or *townhouse units* on the *lot.*

The distance shall be measured at a right angle from the face of the wall.

GARAGE. A *building* or space within a *building*, enclosed by three or more sides, with a vehicle entry doorway or a garage door in accordance with Section R609.4 and R609.4.1 installed in the exterior wall, and provided a vehicular driving surface from a way to the vehicle entry doorway or garage door.

GEOTECHNICAL INVESTIGATION REPORT. A report prepared by, or under the direct supervision of, a registered design professional with experience in geotechnical engineering.

HELICAL PILE. Manufactured steel *deep foundation* element consisting of a central shaft and one or more helical bearing plates. A helical pile is installed by rotating it into the ground. Each helical bearing plate is formed into a screw thread with a uniform defined pitch.

HOUSEHOLD. Any number of persons related to each other by blood, marriage, civil union, committed partnership, adoption, or documented responsibility (such as foster care or guardianship), plus any permitted domestic employees; or up to 10 occupants of any relationship who live together as a family or as the functional equivalent of a family. Members of the household is determined by the occupants rather than by a landlord, property manager, or other third party. Members of a household are not required to seek services or care of any type as a condition of residency. All members of the household jointly occupy the entire premises of the *dwelling unit.*

LIVE/WORK UNIT. A *dwelling unit* or *sleeping unit* in which a significant portion of the space includes a nonresidential use that is operated by the tenant and does not have approval from the Zoning Administrator as a home occupation.

[MP] LIVING SPACE. Space within a building utilized for living, sleeping, eating, cooking, bathing, washing and sanitation purposes. *Garages*, greenhouses, closets, storage spaces, and utility spaces are not considered *living space*.

MEDICAL CARE. Care involving medical or surgical procedures, nursing, or for psychiatric purposes.

NON-SEPARATED, CONTINUOUS, AND OPEN ACCESS PATH. A continuous and unobstructed path of vertical and/or horizontal egress travel that is not closed off by doors, contains a minimum clear width of 48 inches (1219 mm) at openings, and the standard width of a hallway or *stair*.

RESIDENCE. See "*Dwelling unit*."

SALVAGED MATERIAL. Material, component, or assembly removed in a whole form from a *structure* or site in which it was permanently installed and subsequently reused in the *building* project.

SLEEPING ROOM. Any room used or intended to be used for sleeping purposes .

SHALLOW FOUNDATION. A shallow foundation is an individual or strip footing, a mat foundation, a slab-on-grade foundation, or a similar foundation element.

TOWNHOUSE UNIT. A single-family *dwelling unit* in a *townhouse* that extends from foundation to roof and that has a *yard* or *public way* on the full length of one of the four principal sides and has a *yard* or *public way* on at least 50 percent of the length of another principal side.

CHAPTER 3
BUILDING PLANNING

SECTION R301
DESIGN CRITERIA

Table R301.2 CLIMATIC AND GEOGRAPHIC DESIGN CRITERIA, and footnotes, is replaced as follows:

TABLE R301.2 CLIMATIC AND GEOGRAPHIC DESIGN CRITERIA

GROUND SNOW LOAD	WIND DESIGN				SEISMIC DESIGN CATEGORY	SUBJECT TO DAMAGE FROM			WINTER DESIGN TEMP	ICE BARRIER UNDER-LAYMENT REQUIRED	FLOOD HAZARDS	AIR FREEZING INDEX	MEAN ANNUAL TEMP
	Speed (mph)	Topographic effects	Special wind region [b]	Wind-borne debris zone		Weathering [a]	Frost line depth	Termite					
35 psf	115/125/140	No	Yes	No	B	Severe	36 inches	Slight/ Mod	1° F	No	1978	712	40-45

MANUAL J DESIGN CRITERIA					
Elevation	Altitude correction factor	Coincident wet bulb	Indoor winter design dry-bulb temperature	Outdoor winter design dry-bulb temperature	Heating temperature difference
5,285 feet	0.85	60º F	70º F	3º F	67º F
Latitude	Daily range	Indoor summer design relative humidity	Indoor summer design dry-bulb temperature	Outdoor summer design dry-bulb temperature	Cooling temperature difference
40º N	High	50%	75º F	91º F	16º F

a. The grade of masonry units shall be determined from ASTM C 34, C 55, C 62, C73, C 90, C129, C 145, C216 or C652.
b. See Section 1609 of the *Denver Commercial Building Code* for additional information.

Section R301.9 Aircraft Noise Reduction for Townhouses Built in the Denver International Airport Influence Area is added:

Section R301.9 Aircraft Noise Reduction for Townhouses Built in the Denver International Airport Influence Area The provisions of Denver Commercial Building Code Section 430 shall apply to any new or remodeled townhouse unit within the area shown in the Section 430 Exhibit A - DIA Influence Area.

SECTION R302
FIRE-RESISTANT CONSTRUCTION

Section R302.1 Exterior walls is replaced in its entirety as follows:

R302.1 Exterior walls. Construction, projections, openings, and penetrations of *exterior walls* of *dwellings*, *townhouse units*, and *accessory buildings* shall comply with Table R302.1(1); or *dwellings* and *townhouse units* equipped throughout with an *automatic sprinkler system* installed in accordance with Section R313 shall comply with Table R302.1(2).

Exceptions:

1. Walls, projections, openings, or penetrations in walls perpendicular to the line used to determine the *fire separation distance*.
2. Walls of *individual dwelling units* and their *accessory structures*, without *living space* located on the same *lot*.
3. Detached tool sheds and storage sheds, playhouses and similar *structures* exempt from permits are not required to provide wall protection based on the location on the *lot*. Projections, external gutters, and storm drainage systems that extend beyond the *exterior wall* shall not extend over the *lot line*.
4. Detached *garages* accessory to a *dwelling* or *townhouse* located within 2 feet (610 mm) of a *lot line* are permitted to have roof eave projections not exceeding 4 inches (102 mm).
5. Foundation vents installed in compliance with this code are permitted.
6. External gutters and other storm drainage systems are not considered projections.

Section R302.1.1 Townhouse unit imaginary lines is added as follows:

R302.1.1 Townhouse unit imaginary lines. For the purposes of determining *fire separation distance* and requirements of Section R302.1, *townhouse units* shall have assumed imaginary lines established. Assumed imaginary lines shall begin at the ends of the walls separating *townhouse units* required by Section R302.2 and shall extend to a *lot line* or to another imaginary line.

SECTION R305
CEILING HEIGHT

Section R305.1 Minimum height is amended by adding Exception 5

Exceptions:

5. The *ceiling height* in *basements* built prior to October 1990 shall be a minimum of 6 feet 8 (2032 mm) inches, with a minimum clearance of 6 feet 4 inches (1931 mm) to any ceiling projection caused by beams, ducts, or pipes.

Section R305.1.1 Basements is amended by replacing the Exception as follows:

Exception: At beams, girders, ducts, *stair* headroom, and other obstructions, the *ceiling height* shall be not less than 6 feet 4 inches (1931 mm) from the finished floor.

SECTION R310

EMERGENCY ESCAPE AND RESCUE OPENINGS

Section R310.1 Emergency escape and rescue opening required is replaced as follows. The exceptions within Section 310.1 and Section R310.1.1 remain unchanged.

R310.1 Emergency escape and rescue opening required. *Basements*, *habitable attics*, *accessory structures* with *living space*, and every sleeping room shall have not less than one operable *emergency escape and rescue opening*. Where *basements* contain one or more sleeping rooms, an *emergency escape and rescue opening* shall be required in each sleeping room. *Emergency escape and rescue openings* shall open directly into a *public way*, or to a *yard* or *court* having a minimum width of 36 inches (914 mm) that opens to a *public way*.

SECTION R312
GUARDS AND WINDOW FALL PROTECTION

Section R312.1.1 Where required is replaced as follows:

R312.1.1 Where required. *Guards* shall be provided for those portions of open-sided walking surfaces, including floors, *stairs*, ramps, landings, decks, patios, and other hardscaped and landscaped surfaces designed and intended for walking that are located more than 30 inches (762 mm) measured vertically to the floor or *grade* below at any point within 36 inches (914 mm) horizontally to the edge of the open side. Insect screening shall not be considered as a *guard*.

Exception. A *guard* shall not be required at retaining walls adjacent to hardscaped or landscaped walking surfaces located 36 inches (914 mm) or more, measured horizontally and perpendicularly, from the top edge of the retaining wall.

Section R312.1.2 Height is replaced as follows (with exceptions to remain):

Required *guards* at open-sided walking surfaces located greater than 72 inches (1829 mm) above finished *grade* shall be not less than 36 inches (914 mm) in height as measured vertically above the adjacent walking surface, above any integral or built in, abutting raised horizontal surface, or the line connecting the *nosings*.

Section R313 Automatic fire sprinkler systems is replaced in its entirety as follows:

SECTION R313
AUTOMATIC FIRE SPRINKLER SYSTEMS

R313.1 Townhouses automatic sprinkler systems. An *automatic sprinkler system* shall be installed in *townhouses units*:

1. Where a *habitable attic* is constructed above the third *story above grade plane.*

2. Used as a *Family Child Care Home* when the frontage of the *townhouse unit* is more than 125 ft. (38.1m) from a street or fire access road.

R313.1.1 Design and installation. Where required or provided, *automatic sprinkler systems* shall be designed and installed in accordance with NFPA 13D or NFPA 13R. Sprinkler system demand shall be satisfied by Denver Water's site pressures without a fire pump.

R313.2 One- and two-family dwellings automatic fire sprinkler systems. An *automatic sprinkler system* shall be installed in one- and two-family *dwellings* where a *habitable attic* is constructed above the third *story above grade plane.*

R313.2.1 Design and installation. Where required or provided, *automatic sprinkler systems* shall be designed and installed in accordance with NFPA 13D or NFPA 13R. Sprinkler system demand shall be satisfied by Denver Water's site pressures without a fire pump.

R313.3 Live/work units automatic sprinkler systems. An *automatic sprinkler system* shall be installed in *live/work units.*

R313.3.1 Design and installation. *Automatic sprinkler systems* for *live/work units* shall be designed and installed in accordance with NFPA 13R. Sprinkler system demand shall be satisfied by Denver Water's site pressures without a fire pump.

R313.4 Care facilities automatic sprinkler systems. An *automatic sprinkler system* shall be installed in *care facilities*.

R313.4.1 Design and installation. *Automatic sprinkler systems* for *care facilities* shall be designed and installed in accordance with NFPA 13D. Sprinkler system demand shall be satisfied by Denver Water's site pressures without a fire pump.

SECTION R314

SMOKE ALARMS

Section R314.2.2 Alterations, repairs and additions is modified, and Exceptions are replaced as follows:

Section R314.2.2 Alterations and additions. Where alterations or additions requiring a permit occur, the individual dwelling unit shall be equipped with smoke alarms located as required for new dwellings.

Exceptions:

1. *Repairs.*
2. The removal and replacement or the covering of existing materials, elements, equipment, or fixtures using new materials, elements, equipment, or fixtures that serve the same purpose.
3. Work involving the exterior surfaces of *buildings*, such as the replacement of roofing or siding, the addition or replacement of windows or doors, or the addition of porches or decks.
4. Installation, *alteration*, or *repairs* of plumbing or mechanical systems, other than fuel-burning appliances.

SECTION R314.6
POWER SOURCE
Section R314.6 Power source Exceptions are amended by adding the following:

Battery powered or battery-operated smoke alarms or combination smoke/CO alarms shall be listed in accordance with UL 217 for smoke, UL 2034 for CO, or both for combination alarms, and provided with permanent integral 10-year lithium batteries.

SECTION R315
CARBON MONOXIDE ALARMS

Section R315.1 General is amended by adding an exception:

Exception: *Dwelling units* regulated by Sections 305.2.3, 308.2.4, 308.3, 308.5 of this code, or 310 of the *Denver Commercial Building Code*, shall comply with Section 915 of the *Denver Fire Code*.

Section R315.2.1 New construction is amended by replacing Exception 1 as follows:

1. The *dwelling unit* contains a fireplace or other fuel-fired *appliance.*

Section R315.2.2 Alterations, repairs and additions is modified, and Exceptions are replaced as follows:

R315.2.2 Alterations and additions. Where alterations or additions requiring a permit occur, the individual dwelling unit shall be equipped with carbon monoxide (CO) alarms located as required for new dwellings.

Exceptions:

1. *Repairs.*
2. The removal and replacement or the covering of existing materials, elements, equipment, or fixtures using new materials, elements, equipment, or fixtures that serve the same purpose.
3. Work involving the exterior surfaces of *buildings*, such as the replacement of roofing or siding, the addition or replacement of windows or doors, or the addition of porches or decks.
4. Installation, *alteration*, or *repairs* of plumbing or mechanical systems, other than fuel-burning appliances.

Section R315.2.3 Family Child Care Homes is added as follows:

R315.2.3 Family Child Care Homes. The installation of combination carbon monoxide alarms and detectors within *Family Child Care Homes* shall comply with Section 915.5.3 of the *Denver Fire Code*. These devices shall be powered by premise wiring or battery-operated provided with permanent integral 10-year lithium batteries.

Section R315.3 Location is replaced in its entirety as follows:

R315.3 Location. Carbon monoxide alarms in *dwelling units* shall be installed outside of each sleeping area within 15 feet (4572 mm) of the sleeping area doorway and in a central location on every occupiable level. Where a fuel-burning *appliance* is located within a bedroom or its attached bathroom, a carbon monoxide alarm shall be installed within the bedroom.

SECTION R315.6
POWER SOURCE
Section R315.6 Power source Exceptions are amended by adding the following:

Battery powered or battery-operated smoke alarms or combination smoke/CO alarms shall be listed in accordance with UL 217 for smoke, UL 2034 for CO, or both for combination alarms, and provided with permanent integral 10-year lithium batteries.

Section R315.8 Visual notification is added as follows:

R315.8 Visual notification. Visual notification shall be provided in *dwelling units* required to be accessible to persons with disabilities. Such device shall be listed in accordance with UL 1971 for *Safety and Signaling devices for Hearing Impaired*.

[CRS] SECTION R320
ACCESSIBILITY

Section R320.1 Scope is amended by adding the following sentences:

In addition to the requirements of this section, the provisions of Colorado Revised Statute 9-5-101, *et seq.* shall be applicable. CRS 9-5-101, *et seq.* is reproduced in Appendix AR of the Denver Amendments to the *Denver Commercial Building Code*.

SECTION R324
SOLAR ENERGY SYSTEMS

Section R324.4.1 Structural requirements is amended by adding the following sentence:

See Denver Energy Code Section R404.6 for requirements at solar ready zones.

SECTION R326
HABITABLE ATTICS

Section R326.5 Attic alterations is added as follows:

R326.5 Attic alterations. Where existing *attics* in *dwelling units* are located above the third *story above grade plane* and modified into *habitable attics*, an *automatic sprinkler system* shall be installed throughout the *dwelling unit* in accordance with Section R313.1 or R313.2.

SECTION R327
SWIMMING POOLS, SPAS AND HOT TUBS

Section R327 Swimming Pools, Spas and Hot Tubs is replaced in its entirety as follows:

SECTION R327
SWIMMING POOL, SPA, AND HOT TUB BARRIERS

R327.1 General. The provisions of this section shall apply to the design of barriers for restricting entry into areas having pools and spas. Where spas or hot tubs are equipped with a lockable safety cover complying with ASTM F1346 and swimming pools are equipped with a powered safety cover that complies with ASTM F1346, the areas where those spas, hot tubs or pools are located shall not be required to comply with Sections R327.2 through R327.7.

R327.1.1 Construction fencing required. The construction sites for in-ground swimming pools and spas shall be provided with construction fencing to surround the site from the time that any excavation occurs up to the time that the permanent barrier is completed. The fencing shall be not less than 4 feet (1219 mm) in height.

R327.2 Outdoor swimming pools and spas. Outdoor pools and spas and indoor swimming pools shall be surrounded by a barrier that complies with Sections R327.2.1 through R327.7.

R327.2.1 Barrier height and clearances. Barrier heights and clearances shall be in accordance with all of the following:

1. The top of the barrier shall be not less than 48 inches (1219 mm) above *grade* where measured on the side of the barrier that faces away from the pool or spa. Such height shall exist around the entire perimeter of the barrier and for a distance of 3 feet (914 mm) measured horizontally from the outside of the required barrier.
2. The vertical clearance between *grade* and the bottom of the barrier shall not exceed 2 inches (51 mm) for *grade* surfaces that are not solid, such as grass or gravel, where measured on the side of the barrier that faces away from the pool or spa.
3. The vertical clearance between a surface below the barrier to a solid surface, such as concrete, and the bottom of the required barrier shall not exceed 4 inches (102 mm) where measured on the side of the required barrier that faces away from the pool or spa.
4. Where the top of the pool or spa *structure* is above *grade*, the barrier shall be installed on *grade* or shall be mounted on top of the pool or spa *structure*. Where the barrier is mounted on the top of the pool or spa, the vertical clearance between the top of the pool or spa and the bottom of the barrier shall not exceed 4 inches (102 mm).

R327.2.2 Openings. Openings in the barrier shall not allow passage of a 4-inch-diameter (102 mm) sphere.

R327.2.3 Solid barrier surfaces. Solid barriers that do not have openings shall not contain indentations or protrusions that form handholds and footholds, except for normal construction tolerances and tooled masonry joints.

R327.2.4 Mesh fence as a barrier. Mesh fences, other than chain link fences in accordance with Section R327.2.7 shall be installed in accordance with the manufacturer's instructions and shall comply with the following:

1. The bottom of the mesh fence shall be not more than 1 inch (25 mm) above the deck or installed surface or *grade*.
2. The maximum vertical clearance from the bottom of the mesh fence and the solid surface shall not permit the fence to be lifted more than 4 inches (102 mm) from *grade* or decking.
3. The fence shall be designed and constructed so that it does not allow passage of a 4-inch (102mm) sphere under any mesh panel. The maximum vertical clearance from the bottom of the mesh fence and the solid surface shall not be more than 4 inches (102 mm) from *grade* or decking.
4. An attachment device shall attach each barrier section at a height not lower than 45 inches (1143 mm) above *grade*. Common attachment devices include, but are not limited to, devices that provide the security equal to or greater than that of a hook-and-eye type latch incorporating a spring-actuated retaining lever such as a safety gate hook.
5. Where a hinged gate is used with a mesh fence, the gate shall comply with Section 305.3.
6. Patio deck sleeves such as vertical post receptacles that are placed inside the patio surface shall be of a nonconductive material.
7. Mesh fences shall not be installed on top of on-ground *residential* pools.

R327.2.4.1 Setback for mesh fences. The inside of a mesh fence shall be not closer than 20 inches (508 mm) to the nearest edge of the water of a pool or spa.

R327.2.5 Closely spaced horizontal members. Where the barrier is composed of horizontal and vertical members and the distance between the tops of the horizontal members is less than 45 inches (1143 mm), the horizontal members shall be located on the pool or spa side of the fence and shall not be scalable from the exterior side of the barrier. Spacing between vertical members shall not exceed 1¾ inches (44 mm) in width. Where there are decorative cutouts within vertical members, spacing within the cutouts shall not exceed 1¾ inches (44 mm) in width.

R327.2.6 Widely spaced horizontal members. Where the barrier is composed of horizontal and vertical members and the distance between the tops of the horizontal members is 45 inches (1143 mm) or more, spacing between vertical members shall not exceed 4 inches (102 mm). Where there are decorative cutouts within vertical members, the interior width of the cutouts shall not exceed 1¾ inches (44 mm).

R327.2.7 Chain link dimensions. The maximum opening formed by a chain link fence shall be not more than 1¾ inches (44 mm). Where the fence is provided with slats fastened at the top and bottom which reduce the openings, such openings shall be not more than 1¾ inches (44 mm).

R327.2.8 Diagonal members. Where the barrier is composed of diagonal members, the maximum opening formed by the diagonal members shall be not more than 1¾ inches (44 mm). The angle of diagonal members shall be not greater than 45 degrees (0.79 rad) from vertical.

R327.2.9 Clear zone. Where equipment, including pool equipment such as pumps, filters and heaters, is on the same lot as a pool or spa and such equipment is located outside of the barrier protecting the pool or spa, such equipment shall be located not less than 36 inches (914 mm) from the outside of the barrier.

R327.3 Doors and gates. Doors and gates in barriers shall comply with the requirements of Sections R327.3.1 through R327.3.3 and shall be equipped to accommodate a locking device. Pedestrian access doors and gates shall open outward away from the pool or spa, shall be self-closing and shall have a self-latching device.

R327.3.1 Utility or service doors and gates. Doors and gates not intended for pedestrian use, such as utility or service doors and gates, shall remain locked when not in use.

R327.3.2 Double or multiple doors and gates. Double doors and gates or multiple doors and gates shall have not fewer than one leaf secured in place and the adjacent leaf shall be secured with a self-latching device.

R327.3.3 Latch release. For doors and gates in barriers, the door and gate latch release mechanisms shall be in accordance with the following:

1. Where door and gate latch release mechanisms are accessed from the outside of the barrier and are not of the self-locking type, such mechanism shall be located not less than 54 inches (1372 mm) above the finished floor or ground surface.
2. Where door and gate latch release mechanisms are of the self-locking type such as where the lock is operated by means of a key, an electronic opener or the entry of a combination into an integral combination lock, the lock operation control and the latch release mechanism shall be located not greater than 54 inches (1372 mm) above the finished floor or ground surface.
3. At private pools, where the only latch release mechanism of a self-latching device for a gate is located on the pool and spa side of the barrier, the release mechanism shall be located at a point that is at least 3 inches (76 mm) below the top of the gate.

R327.3.4 Barriers adjacent to latch release mechanisms. Where a latch release mechanism is located on the inside of a barrier, openings in the door, gate and barrier within 18 inches (457 mm) of the latch shall not be greater than 1/2 inch (12.7 mm) in any dimension.

R327.4 Structure wall as a barrier. Where a wall of a *dwelling* or *structure* serves as part of the barrier and where doors, gates, or windows provide direct access to the pool or spa through that wall, one of the following shall be required:

1. Operable windows having a sill height of less than 48 inches (1219 mm) above the indoor finished floor, doors, and gates shall have an alarm that produces an audible warning when the window, door or their screens are opened. The alarm shall be *listed* and *labeled* as a water hazard entrance alarm in accordance with UL 2017.

2. In dwellings not required to be Accessible units, Type A units or Type B units, the operable parts of the alarm deactivation switches shall be located at not less than 54 inches (1372 mm) above the finished floor.
3. In dwellings required to be Accessible units, Type A units or Type B units, the operable parts of the alarm deactivation switches shall be located not greater than 54 inches (1372 mm) and not less than 48 inches (1219 mm) above the finished floor.
4. In *structure*s other than dwellings, the operable parts of the alarm deactivation switches shall be located not greater than 54 inches (1372 mm) and not less than 48 inches (1220 mm) above the finished floor.
5. A *safety* cover that is *listed* and *labeled* in accordance with ASTM F 1346 is installed for the pools and spas.
6. An *approved* means of protection, such as self-closing doors with self-latching devices, is provided. Such means of protection shall provide a degree of protection that is not less than the protection afforded by Item 1 or 2.

R327.5 On-ground residential pool structure as a barrier. An on-ground *residential* pool wall *structure* or a barrier mounted on top of an on-ground *residential* pool wall *structure* shall serve as a barrier where all the following conditions are present:

1. Where only the pool wall serves as the barrier, the bottom of the wall is on *grade*, the top of the wall is not less than 48 inches (1219 mm) above *grade* for the entire perimeter of the pool, the wall complies with the requirements of Section 327.2 and the pool manufacturer allows the wall to serve as a barrier.
2. Where a barrier is mounted on top of the pool wall, the top of the barrier is not less than 48 inches (1219 mm) above *grade* for the entire perimeter of the pool, and the wall and the barrier on top of the wall comply with the requirements of Section 327.2.
3. Ladders or steps used as means of access to the pool are capable of being secured, locked, or removed to prevent access except where the ladder or steps are surrounded by a barrier that meets the requirements of Section R327.
4. Openings created by the securing, locking or removal of ladders and steps do not allow the passage of a 4-inch (102 mm) diameter sphere.
5. Barriers that are mounted on top of on-ground *residential* pool walls are installed in accordance with the pool manufacturer's instructions.

R327.6 Natural barriers. In the case where the pool or spa area abuts the edge of a lake or other natural body of water, public access is not permitted or allowed along the shoreline, and required barriers extend to and beyond the water's edge not less than 18 inches (457 mm), a barrier is not required between the natural body of water shoreline and the pool or spa.

R327.7 Natural topography. Natural topography that prevents direct access to the pool or spa area shall include but not be limited to mountains and natural rock formations. A natural barrier *approved* by the governing body shall be acceptable provided that the degree of protection is not less than the protection afforded by the requirements of Sections R327.2 through R327.5.

SECTION R328
ENERGY STORAGE SYSTEMS

Section R328.4 Locations is replaced as follows:

R328.4 Locations. ESS shall be installed only in the following locations:

1. Detached *garages* and detached *accessory structures* without *living space*.
2. Attached *garages* separated from the *dwelling unit living space* accordance with Section R302.6.
3. Outdoors or on the exterior side of exterior walls located not less than 3 feet (914 mm) from doors and windows directly entering the *dwelling unit*.
4. Enclosed utility closets, *basements*, storage, or utility spaces within *dwelling units* with finished or noncombustible walls and ceilings. Walls and ceilings of unfinished wood-framed construction shall be provided with not less than 5/8-inch (15.9 mm) Type X gypsum wallboard

Section R328.5 Energy ratings is replaced as follows:

R328.5 Energy ratings. Individual ESS units shall have a maximum rating of 20 kWh. The aggregate rating of the ESS shall not exceed:

1. 40 kWh within utility closets, *basements* and storage or utility spaces.
2. 80 kWh in attached or detached *garages* and detached *accessory structures* without *living space*.
3. 80 kWh on exterior walls.
4. 80 kWh outdoors on the ground.

Section R331 Materials is added as follows:

SECTION R331
MATERIALS

R331.1 Low-volatile organic compound (VOC) materials. All permanently installed interior finish materials such as flooring, sealants and adhesives, composite wood resilient flooring, carpeting and pad, site-applied paints and coatings, stains and varnishes, thermal and acoustic insulation, wall coverings and wall panels, gypsum board, acoustical ceiling tiles and ceiling panels, structural wood panels, hardwood veneer plywood, particle board, oriented strand board and fiber board building products shall meet specified volatile organic compound (VOC) emissions limits in accordance with California Department of Public Health 01350; GREENGUARD Environmental Institute GGPS.001 standard for building materials and finishes; Green Seal® standards, or *approved* equivalent.

Exceptions.

1. Furniture and inherently non-emitting materials, such as stone, ceramic, powder-coated metals, plated or anodized metal, glass, concrete, clay brick, or unfinished/untreated solid wood) without binders, surface coatings, or sealants that include organic chemicals.
2. Salvaged materials that have not been refurbished or refinished within one year prior to installation.

CHAPTER 4
FOUNDATIONS

SECTION R401
GENERAL

[DOTI] Section R401.1 Application is amended by adding the following sentence to the end of the section:

The Wastewater Management Division of the Department of Transportation and Infrastructure regulates the requirements for excavation, grading, and earthwork construction, including fills and embankments.

Section R401.4 Soil tests is replaced as follows:

R401.4 Soil tests. The classification of the soil at each *building* site shall be investigated and reported in accordance with Sections R401.4.1 and R401.4.2 under any of the following conditions:

1. Construction of new *dwellings*, *townhouses,* or *accessory structures* with living space.
2. *Additions* to existing *dwellings*, *townhouses*, or *accessory structures* when a *deep foundation*, other than a *helical pile* foundation, is used.
3. *Alterations* or *repairs* of existing foundation systems utilizing *deep foundations*, other than *helical pile* foundations.
4. When a permit is required for excavation, benching, or shoring.
5. When expansive soils or other questionable soils are likely to be present.

Exception: *Additions, alterations*, *repairs, or a change of occupancy* to *dwellings*, *townhouses*, and *accessory structures* shall be permitted to use the soil load-bearing values provided in Table R401.4.1 for prescriptive *shallow foundation* design in accordance with this Chapter.

Section R401.4.1 Geotechnical evaluation is replaced as follows (Table R401.4.1 remains):

R401.4.1 Investigation. The classification shall be based on observation and any necessary tests of the materials disclosed by borings or excavations made in appropriate locations. Additional studies may be necessary to evaluate soil strength, the effect of moisture variation on soil bearing capacity, compressibility, liquefaction, and expansiveness.

Section R401.4.2 Compressible or shifting soil is replaced in its entirety as follows:

R401.4.2 Reports. The soil classification and design bearing capacity shall be determined by a *geotechnical investigation report* and shown on the permit application drawings in accordance with Section R106.1.6.

Section R401.4.3 Geotechnical Investigation Report is added as follows:

R401.4.3 Geotechnical Investigation Report. Where required by Section R401.4, a geotechnical investigative report shall include the following information and shall be provided in the permit application drawings.

1. The date of the report within two years of the date of permit application submittal or within five years of the date of permit application submittal and including a signed and sealed letter by the geotechnical engineering firm of record, confirming the applicability and recommendations in the original report.
2. A plot showing the location of the test borings and/or excavations.
3. Description and classifications of the materials encountered.
4. Elevation of the water table, if encountered.
5. Recommendations for foundation type and design criteria, including bearing capacity, provisions to mitigate the effects of expansive soils, provisions to mitigate the effects of liquefaction and soil strength, and the effects of adjacent loads.
6. Expected total and differential settlement

Section R403.1 General is amended by adding the exception as follows.

Exception. Footings are not required for support of exterior walls or floors of storage sheds of light-frame construction, or other *accessory structures* as approved by the *building official*, in accordance with all the following:

1. 200 square feet (18.6 m^2) or less in area.
2. 10 feet (3048 mm) or less in height, measured from *grade plane* to the top of the wall's top plate.
3. Anchored to a slab or secured with one earth anchor at each corner and a total of at least 4 anchors. Anchors shall be installed in accordance with the manufacturer's specifications.

Section R403.1.4.1 Frost protection is modified by replacing item 1 and both Exceptions as follows (all other language remains unchanged):

R403.1.4.1 Frost protection.

1. Bearing on or below the frost line of 36 inches (914 mm).

Exceptions:

1. Protection of free-standing, *accessory structures* without *living space* with an area of 600 square feet (56 m^2) or less measured to the exterior face of the exterior wall, of light-frame construction, with a wall height of 10 feet (3048 mm) or less, measured from *grade plane* to the top of the wall's top plate, shall not be required. Each individual *accessory structure* shall be structurally independent and free of support or attachment to other *structures*.
2. Protection of free-standing, *accessory structures* without *living space* with an area of 400 square feet (37 m^2) or less measured to the exterior face of the exterior wall, of other than light-frame construction, with a wall height of 10 feet (3048 mm) or less, measured from *grade plane* to the top of the concrete or masonry wall, shall not be required. Each individual *accessory structure* shall be structurally independent and free of support or attachment to other *structures*.

CHAPTER 7
WALL COVERING

SECTION R702
INTERIOR COVERING

Section R702.7 Vapor retarders is replaced as follows:

R702.7 Vapor retarders Vapor retarder materials shall be classified in accordance with Table R702.7(1). A vapor retarder shall be provided on the interior side of frame walls of the class indicated in Table R702.7(2). An *approved* design using accepted engineering practice for hygrothermal analysis shall be permitted as an alternative. The climate zone shall be determined in accordance with Section N1101.7.

Exceptions:

1. *Basement walls*.
2. Below-grade portion of any wall.
3. Construction where accumulation, condensation or freezing of moisture will not damage the materials.
4. A vapor retarder shall not be required in climate zones 1, 2 and 3

Table R702.7(2) Vapor retarder options is replaced as follows:

TABLE R702.7(2)
VAPOR RETARDER OPTIONS

CLIMATE ZONE	VAPOR RETARDER CLASS		
	CLASS I[a]	CLASS II[a]	CLASS III
5b	Permitted[b]	Permitted[c]	Permitted

a. Class I and II vapor retarders with vapor permeance greater than 1 perm when measured by ASTM E96 water method (Procedure B) shall be allowed on the interior side of any frame wall in all climate zones.

b. Use of a Class I interior vapor retarder in frame walls with a Class I vapor retarder on the exterior side shall require an approved design.

c. Where a Class II vapor retarder is used in combination with foam plastic insulating sheathing installed as continuous insulation on the exterior side of frame walls, the continuous insulation shall comply with Table R702.7(4) and the Class II vapor retarder shall have a vapor permeance greater than 1 perm when measured by ASTM E96 water method (Procedure B).

Table R702.7(3) Vapor retarders is deleted in its entirety.

Table R702.7(4) Continuous insulation with class II vapor retarder is deleted in its entirety.

Section R702.7.1 Spray foam plastic insulation for moisture control with Class II and III vapor retarders is modified as follows.

R702.7.1 Spray foam plastic insulation for moisture control with Class II and III vapor retarders. Spray foam with a maximum permeance of 1.5 perms at the installed thickness applied to the interior side of wood structural panels, fiberboard, insulating sheathing or gypsum shall be deemed to meet the Class II or Class III continuous insulation moisture control requirement in accordance with one of the following conditions:

1. The spray foam R-value is equal to or greater than the specified continuous insulation R-value.
2. The combined R-value of the spray foam and continuous insulation is equal to or greater than the specified continuous insulation R-value.

SECTION R703
EXTERIOR COVERING

Section R703.1.3 Clearance above roof covering is added as follows:

R703.1.3 Clearances above roof covering. Where manufacturer's installation instructions do not provide clearances to roof coverings, the following clearances between wall covering and roof covering shall apply:

1. Minimum of 8 inches (203 mm) above roof coverings installed on roof slopes less than 2 units vertical in 12 units horizontal (17-percent slope).
2. Minimum of 2 inches (51 mm) above roof coverings installed on roof slopes 2 units vertical in 12 units horizontal or greater (17-percent slope).

CHAPTER 9
ROOF ASSEMBLIES

SECTION R903
WEATHER PROTECTION

Section R903.2.3 Flashing for single-ply roof systems is added as follows:

R903.2.3 Flashing for single-ply roof systems. All flashing installations for single-ply roofing systems shall be installed per manufacturer's latest recommendations and details for the system.

Section R903.2.4 Flashing for interior roof drains is added as follows:

R903.2.4 Flashing for interior roof drains. Flashing for interior roof drains shall be one of the following:

1. A minimum of 2 x 2 feet (610 x 610 mm), 4-pound lead sheet or lead-copper coated sheet, set on completed felts in flashing cement. The metal shall be turned a minimum of ½ inch (12.7 mm) into a drain sump and plied with two plies of Type 4 felt or modified bitumen membrane of sufficient dimension to extend a minimum of 6 inches (152 mm) past metal sheet.
2. A 2-component drain system. The membrane flashing shall be polyvinyl chloride sheet measuring 22 inches in length and factory-attached to the underside of the strainer flange. The membrane flashing shall be applied on top of the completed felt, shall extend a minimum of 6 inches (152 mm) from the outside diameter of the drain throat, shall be set into hot asphalt or *approved* sealants and plied in with two plies of Type 4 felt.

Drain details for single-ply systems shall be installed in accordance with the manufacturers' specifications.

Section R903.2.5 Vertical projections is added as follows:

R903.2.5 Vertical projections. All projections through the roof surface shall be properly flashed to prevent moisture entry.

1. Pipe penetrations shall be completed with a standard roof jack or manufacturer-recommended detail.
2. Pitch pans may be used to flash multiple penetrations with prior approval. Pourable sealer or sheet metal caps shall be used to seal pitch pans.

Section R903.2.6 Penetration of roof membrane is added as follows:

R903.2.6 Penetration of roof membrane. Exterior wall finishes such as, but not limited to**,** stucco and siding on walls extending above the roof shall terminate a minimum of 8 inches (203 mm) above the finished roofing of a flat roof and 2 inches (50.8 mm) above shingle, shake and tile roofs. Fasteners for exterior wall finished shall not penetrate the manufacturer's minimum required vertical upturn leg of the roofing membrane.

Section R903.4.2 Equipment on roof is added as follows:

R903.4.2 Equipment on roof. Equipment placed over roofing shall be supported by 8-inch (203-mm) legs or curbs bearing on the decking, which shall not inhibit the flow of water from the roof.

SECTION R905
REQUIREMENTS FOR ROOF COVERINGS

Section R905.2.8.2 Valleys item 3 is replaced in its entirety as follows:

3. For closed valleys (valley covered with shingles), valley lining of one ply of smooth roll roofing complying with ASTM D 6380 and not less than 36 inches wide (914 mm) or valley lining as described in Item 2 shall be permitted. Self-adhering polymer modified bitumen underlayment complying with ASTM D 1970 shall be permitted in lieu of the lining material.

Section R905.5.2 Deck slope is replaced in its entirety as follows:

R905.5.2 Deck slope. Mineral surfaced rolled roofing (90 lbs.) shall not be applied on roof slopes below 2 units vertical in 12 units horizontal.

Exception: Detached *garages*, patios and carports open on three sides may have a slope of 1 unit vertical in 12 units horizontal (8-percent slope).

Section R905.9.4 Flashing – new built-up roof covering is added as follows:

R905.9.4 Flashing – new built-up roof covering. Flashing shall be installed on all vertical walls and curbs in accordance with the manufacturers' specifications and:

1. All old wall flashing shall be removed prior to installation of new flashing.
2. All flashings shall extend at least 8 inches (203 mm), but not more than 12 inches (305 mm), up all vertical surfaces and at least 4 inches (102 mm) from the base of the cant.
3. The top edges of the flashing shall be fastened at 3-inch (76-mm) intervals and sealed with plastic cement.

4. End laps shall be at least 3 inches (6 mm) long and covered with 4 inches (102 mm) of mesh embedded in plastic cement.
5. All vertical walls and projections shall be counter flashed with a 2-piece metal system installed watertight.
6. Nailing strips shall be provided on vertical walls, drip edge and curbs which will not accept conventional nailing.

CHAPTER 10
CHIMNEYS AND FIREPLACES

SECTION R1002
MASONRY HEATERS

Section R1002.1 Definition is amended by adding the following sentence to the end of the definition:

Masonry heaters shall be approved by the Colorado Department of Public Health and Environment and listed on their currently published list of Colorado Approved Masonry Heaters.

CHAPTER 11
ENERGY EFFICIENCY

Chapter 11 Energy Efficiency is replaced in its entirety by the Residential Provisions of the 2022 Denver Energy Code.

CHAPTER 14
HEATING AND COOLING EQUIPMENT AND APPLIANCES

SECTION M1410
VENTED ROOM HEATERS

Section M1410.1 General is amended by adding the following sentence to the end of the section:

Pellet or wood-burning appliances and stoves or heaters. *Pellet fuel-burning appliances* and wood burning *fireplace stoves* and room heaters shall be listed by an *approved* testing agency and shall meet Step 2, 2020standards in the EPA Certified Wood Heater Database published by the Environmental Protection Agency and approved by Colorado Department of Public Health & Environment. Wood-burning appliances ~~is~~ not on the EPA *approved* list cannot be installed unless converted to a gas log fireplace in accordance with the requirements of Section 602 of the *Denver Fuel Gas Code.*

SECTION M1411
HEATING AND COOLING EQUIPMENT

Section M1411.2 Refrigeration system listing is added as follows:

M1411.2 Refrigeration system listing. Refrigeration systems using Group A2L refrigerants shall be *listed* and *labeled* to UL/CSA 60335-2-40. Refrigeration systems using Group A1 refrigerants shall be *listed* to UL/CSA 60335-2-40 or UL 1995. The equipment shall be installed in accordance with the listing.

Section M1411.3 Refrigeration system installation is added as follows:

M1411.3 Refrigeration system installation. Refrigeration systems shall be installed in accordance with the manufacturer's installation instructions. After installation, the manufacturer's installation instructions, owner's manuals, service manuals, and any other product literature provided with the equipment shall be attached to the indoor unit or left with the homeowner.

Section M1411.4 Field-installed accessories is added as follows:

M1411.4 Field-installed accessories. Field-installed accessories shall be installed in accordance with the accessory and equipment manufacturer's installation instructions. Accessories installed in the ductwork of Group A2L refrigeration systems shall not contain electric heating elements, open flames, or devices switching electrical loads greater than 2.5 kVA.

Section M1411.5 Signs and identification is added as follows:

M1411.5 Signs and identification. Each refrigeration system using Group A2L refrigerant shall have the following information legibly and permanently indicated on a markable label provided by the equipment manufacturer.

1. Contact information of the responsible company that installed the refrigeration system.
2. The system refrigerant charge and the refrigerant number.

Section M1411.6 Refrigerant charge is added as follows:

M1411.6 Refrigerant charge. Refrigerant systems shall have refrigerant charge in compliance with the equipment manufacturer's installation instructions and the requirements of the listing. Group A2L refrigerant charge for an individual refrigeration system shall not exceed 34.5 pounds (15.7 kg).

Section M1411.7 Group A2L refrigerant piping testing is added as follows:

M1411.7 Group A2L refrigerant piping testing. The piping system containing Group A2L refrigerant shall be tested in accordance with the manufacturer's installation instructions and the requirements of the listing.

Section M1411.2 Refrigeration coils in warm-air furnaces is renumbered to M1411.8.

Section M1411.3 Condensate disposal is renumbered to M1411.9.

Section M1411.3.1 Auxiliary and secondary drain systems is renumbered to M1411.9.1.

Section M1411.3.1.1 Water-level monitoring devices is renumbered to M1411.9.1.1.

Section M1411.3.1.2 Appliance, equipment and insulation in pans is renumbered to M1411.9.1.2.

Section M1411.3.2 Drain pipe materials and sizes is renumbered to M1411.9.2.

Section M1411.3.3 Drain line maintenance is renumbered to M1411.9.3.

Section M1411.3.4 Appliances, equipment and insulation in pans is renumbered to M1411.9.4.

Section M1411.4 Condensate pumps is renumbered to M1411.10.

Section M1411.5 Auxiliary drain pan is renumbered to M1411.11.

Section M1411.6 Insulation of refrigerant piping M1411.12

Section M1411.6.1 Refrigerant line insulation protection is renumbered to M1411.12.1

Section M1411.7 Location and protection of refrigerant piping is renumbered to M1411.13

Section M1411.8 Support of refrigerant piping is renumbered to M1411.14.

Section M1411.9 Locking access port caps is renumbered to M1411.15

SECTION M1412
ABSORPTION COOLING EQUIPMENT

M1412.1 Listed equipment is modified as follows:

M1412.1 Listed equipment. Absorption systems shall be installed in accordance with the manufacturer's instructions. Absorption *equipment* shall ~~comply~~ be *listed* and *labeled* in accordance with UL 1995 or UL/CSA~~/ANCE~~ 60335-2-040.

SECTION M1414
FIREPLACE STOVES

Section M1414.1 General is amended by adding the following sentence to the end of the section:

Pellet or wood-burning appliances and stoves or heaters. *Pellet fuel-burning appliances* and wood burning *fireplace stoves* and room heaters shall be listed by an *approved* testing agency and shall meet Step 2, 2020 standards in the EPA Certified Wood Heater Database published by the Environmental Protection Agency and approved by Colorado Department of Public Health & Environment. Wood-burning appliances ~~is~~ not on the EPA *approved* list cannot be installed unless converted to a gas log fireplace in accordance with the requirements of Section 602 of the *Denver Fuel Gas Code.*

CHAPTER 20
BOILERS AND WATER HEATERS

SECTION M2006
POOL HEATERS

M2006.1 General. Pool and spa heaters shall be installed in accordance with the manufacturer's installation instructions. Oil-fired pool heaters shall ~~comply~~ be *listed* and *labeled* in accordance with UL 726. Electric pool and spa heaters shall be *listed* and *labeled* in accordance~~comply~~ with UL 1261. Pool and spa heat pump water heaters shall be *listed* and *labeled* in accordance~~comply~~ with UL 1995, or UL/CSA 60335-2-40 ~~or CAS C22.2 No. 236~~.

Exception: Portable residential spas and portable residential exercise spas shall be *listed* and *labeled* in accordance~~comply~~ with UL1563 or CSA 22.2 No. 218.1

CHAPTER 24
FUEL GAS

SECTION G2414
PIPING MATERIALS

Section G2414.4.3 Copper or copper-alloy tubing is replaced in its entirety as follows:

G2414.4.3 (403.4.3) Copper or copper-alloy tubing. Copper or copper-alloy tubing is not permitted.

SECTION G2415
PIPING SYSTEM INSTALLATION

Section G2415.3 (404.3) Prohibited locations is amended by adding the following sentence to the end of the section:

Gas meters shall not be located in or under any *building* unless the meter is located in its own dedicated, adequately ventilated vault.

SECTION G2417
INSPECTION, TESTING AND PURGING

Section G2417.4.1 Test pressure is replaced as follows:

G2417.4.1 (406.4.1) Test pressure. The test pressure to be used shall be no less than 1½ times the proposed maximum working pressure, but not less than 10 psig (69 kPa gauge), irrespective of design pressure. For welded piping and for piping carrying gas at pressures exceeding 14 inches water column (3.5 kPa gauge) pressure, the test pressure shall be no less than 60 psig (414 kPa gauge). Where the test pressure exceeds 125 psig (862 kPa gauge), the test pressure shall not exceed a value that produces a hoop stress in the piping greater than 50 percent of the specified minimum yield strength of the pipe.

SECTION G2437
FLOOR FURNACES

Sections G2437.1 (609.1) General through G2437.6 (609.6) Upper-floor installations are deleted in their entirety and replaced as follows:

G2437.1 (609.1) General. Floor furnaces are prohibited.

SECTION G2445
UNVENTED ROOM HEATERS

Sections G2445.1 General through G2445.7.1 Ventless firebox enclosures are deleted in their entirety and replaced as follows:

G2445.1 Prohibited. Unvented room heaters, and open-flame or radiant heaters shall not be installed or operated within *dwelling units*.

CHAPTER 25
PLUMBING ADMINISTRATION

SECTION P2503
INSPECTION AND TESTS

Section P2503.5.1 Rough plumbing is modified as follows (Items 1, 2, and 3 remain unchanged):

P2503.5.1 Rough Plumbing. DWV systems shall be tested on completion of the rough piping installation by water, by air, or by vacuum of air, without evidence of leakage. The test shall be applied to the drainage system in its entirety or in sections after rough-in piping has been installed, as follows:

CHAPTER 26
GENERAL PLUMBING REQUIREMENTS

SECTION P2602
INDIVIDUAL WATER SUPPLY AND SEWAGE DISPOSAL

Section P2602.3 Existing buildings is added as follows:

P2602.3 Existing buildings. Plumbing in existing *buildings* may have their use continued if such use was legally permitted at the time of enforcement of the plumbing code in effect at the time of construction and such use is not detrimental to the health and safety of the occupants for the current use or occupancy.

Any change in the use or occupancy of any existing *building* or *structure* shall comply with the provisions of this code.

Section P2603.5.1 Sewer depth is replaced in its entirety as follows:

P2603.5.1 Sewer depth. *Building* sewers that connect to a private sewage disposal system shall be installed at a depth in accordance with DOTI Wastewater Management Standards and Details.

CHAPTER 27
PLUMBING FIXTURES

SECTION P2716
FOOD-WASTE DISPOSER

Section P2716.1 Food-waste disposer waste outlet is replaced in its entirety as follows:

P2716.1 Food-waste disposer waste outlet. Food waste disposers with a waste outlet of 1 ½ inches (38 mm) in diameter shall be connected to a drain of not less than 2 inches (51 mm) in diameter.

CHAPTER 29
WATER SUPPLY AND DISTRIBUTION

SECTION P2904
DWELLING UNIT FIRE SPRINKLER SYSTEMS

Section P2904.1 General is replaced in its entirety as follows:

P2904.1 General. *Automatic sprinkler systems* shall be designed and installed in accordance with Section R313.

All subsections of Section P2904 are deleted in entirety.

SECTION P2906
MATERIALS, JOINTS AND CONNECTIONS

Section 2906.4 Water service pipe is replaced in its entirety as follows, though the subsection remains:

2906.4 Water service pipe. Water service pipe shall conform to NSF 61 and shall conform to Denver Water Engineering Standards. Water service pipe or tubing, installed underground and outside of the *structure*, shall have a working pressure rating of not less than 160 pounds per square inch at 73°F (1103 kPa at 23°C). Where the water pressure exceeds 160 pounds per square inch (1103 kPa), piping material shall have a rated working pressure equal to or greater than the highest available pressure. Water service piping materials not third-party certified for water distribution shall terminate at or before the full open valve located at the entrance to the *structure*. Ductile iron water service piping shall be cement mortar lined in accordance with AWWA C104/A21.4.

CHAPTER 30

SANITARY DRAINAGE

SECTION P3003
JOINTS AND CONNECTIONS

Section P3003.9.2 Solvent cementing is modified by deleting the exceptions:

SECTION P3005
DRAINAGE SYSTEM

Section P3005.2.4 Changes of direction is amended as follows:

P3005.2.4 Changes of direction. Where a horizontal drainage pipe, or a *building* drain has a change of horizontal direction greater than 135 degrees (2.36 rad), a cleanout shall be installed at the change of direction. Where more than one change of direction occurs in a run of piping, only one cleanout shall be required for each 40 feet (12 192 mm) of developed length of piping.

CHAPTER 31
VENTS

SECTION P3103
VENT TERMINALS

Section P3103.1.1 Roof extension is replaced in its entirety as follows:

P3103.1.1 Roof extension. Open vent pipes that extend through a roof that do not meet the conditions of Section P3103.1.2 or P3103.1.3 shall terminate not less than 12 inches (305 mm) above the roof.

SECTION P3111
COMBINATION WASTE AND VENT SYSTEMS

Section P3111.1 Type of fixture is amended by adding the following sentence to the end of the section:

A combination waste and vent system shall not receive the discharge of a food waste disposer.

SECTION P3114
AIR ADMITTANCE VALVES

Section P3114.8 Prohibited installations is replaced in its entirety as follows:

P3114.8 Prohibited installations. Air admittance valves shall not be used to vent sumps or tanks. Air admittance valves shall not be installed on outdoor vent *terminals* for the sole purpose of reducing clearances to gravity or mechanical air intakes.

CHAPTER 36
SERVICES

SECTION E3601
GENERAL SERVICES

Section E3601.2 Number of services is replaced in its entirety as follows:

E3601.2 Number of services. *One- and two-family dwellings* and any associated *structures* shall be supplied by one set of service entrance conductors, as defined in the *Electrical Code of the City and County of Denver*, whether overhead or underground.

CHAPTER 44
REFERENCED STANDARDS

ANCE

Association of Standardization and Certification (ANCE) Standard NMX-J-521/2-40-ANCE is deleted.

ASHRAE

ASHRAE 34-2019 has been replace with ASHRAE 34-2022 as follows:

ASHRAE 34-~~2019~~2022	Designation and Safety Classification of Refrigerants, including Addenda a through n	
		M1411.1

UL

UL 484—2014 Standard for Room Air Conditioners—with Revisions through May 2019 is added as follows:

UL 484—2014	Standard for Room Air Conditioners—with Revisions through May 2019	
		M1404.1

UL Standard UL/CSA/ANCE 60335.2.40—2012 Standard for Household and Similar electrical Appliances, Part 2: Particular Requirements for Motor-compressors is replaced as follows:

UL/CSA 60335-2-40—2022	Household and Similar Electrical Appliances—Safety—Part 2-40: Particular Requirements for Electrical Heat Pumps, Air-Conditioners and Dehumidifiers	
	~~**UL Standard UL/CSA 60335.2.40—2019 Standard for Household and Similar Electrical Appliances—Safety—Part 2-40: Particular Requirements for Electric Heat Pumps, Air-Conditioners and Dehumidifiers.**~~	
		M1402.1, M1403.1, M1411.2, M1412.1, M1413.1, M2006.1

RESIDENTIAL CODE APPENDICES
STATUS OF APPENDICES ON ADOPTION

Appendices are Adopted, Adopted as Amended, or Not Adopted as part of this Code as noted in Appendix Adoption Table 1. Provisions in Appendices that are adopted or adopted as amended carry the full weight and mandatory enforceability of the Code.

RESIDENTIAL CODE APPENDIX ADOPTION TABLE 1

APPENDIX	TITLE – SUBJECT	STATUS
AA	Sizing and Capacities of Gas Piping (IFGS)	Not Adopted
AB	Sizing of Venting Systems Serving Appliances Equipped with Draft Hoods, Category I Appliances, and Appliances Listed for Use with Type B Vents (IFGS)	Not Adopted
AC	Exit Terminals of Mechanical Draft and Direct-Vent Ventilating Systems (IFGS)	Not Adopted
AD	Recommended Procedures for Safety Inspection of an Existing Appliance Installation (IFGS)	Not Adopted
AE	Manufactured Housing Used as Dwellings (IBC)	Adopted as Amended
AF	Radon Control Methods	Adopted as Amended
AG	Piping Standards for Various Applications	Not Adopted
AH	Patio Covers	Adopted
AI	Private Sewage Disposal	Not Adopted
AJ	Existing Buildings and Structures	Adopted as Amended
AK	Sound Transmission	Adopted
AL	Permit Fees	Not Adopted
AM	Home Day Care – R-3 Occupancy	Adopted as Amended
AN	Venting Methods	Not Adopted
AO	Automatic Vehicular Gates	Not Adopted
AP	Sizing of Water Piping System	Not Adopted
AQ	Tiny Homes	Adopted
AR	Light Straw-Clay Construction	Adopted
AS	Strawbale Construction	Adopted
AT	Solar-Ready Provisions – Detached One- and Two-Family Dwellings, Multiple Single-Family Dwellings (Townhouses)	Not Adopted
AU	Cob Construction (Monolithic adobe)	Not Adopted
AV	Board of Appeals	Not Adopted
AW	3D-Printed Building Construction	Not Adopted

APPENDIX AE
MANUFACTURED HOUSING USED AS DWELLINGS

Appendix AE Manufactured housing used as dwellings is replaced as follows:

The provisions of Section 3116 of the *Denver Commercial Building Code* shall apply to the construction, *alteration*, movement, enlargement, replacement, *repair*, equipment, use, and occupancy of *manufactured homes*.

APPENDIX AF
RADON CONTROL METHODS

Appendix AF is adopted with the following amendments.

Section AF101.1 General is replaced as follows:

AF101.1 General. Compliance with the provisions of Appendix AF shall be required in all the following types of construction:

1. Construction of *one- and two-family dwellings* and *townhouses* constructed under this code.
2. *Additions* to *dwellings units* with existing radon control systems, that include *living space*, storage space, or utility space constructed over previously exposed earth.
3. New *basement additions* converted from existing *crawl spaces*.
4. *Additions* to *dwellings units* without existing radon control systems, that include *living space*, storage space, or utility space constructed over previously exposed earth with a foundation footprint greater than 300 square feet.
5. *Alterations* to existing *dwelling units* or *accessory structures* that convert nonliving spaces with a foundation footprint greater than 300 square feet directly over the earth into *living space*, or storage or utility spaces, such as a change of use of a *garage* to a *living space*.

Exceptions:

1. *Alterations* to existing *dwelling units* or *accessory structures* where existing floor assemblies are to remain unaltered.
2. Unconditioned attached and detached *garages.*

Section AF103.2 Subfloor preparation is amended by adding item #4 as follows:

4. A soil gas collection mat system shall be installed on top of the sub-grade and beneath a concrete floor slab. The mat shall be installed in a continuous rectilinear loop having a minimum dimension of 1-inch in height by 12-inches (305-mm) in width and a nominal cross-sectional area for airflow of no less than 12 square inches (0.093 m^2). The mat shall be constructed of a matrix that allows for the movement of air through it and shall be capable of supporting the concrete placed upon it. The matrix shall be covered by approved filter material on all four sides to prevent dirt or concrete from entering the matrix. All breaches and joints in the filter material shall be repaired prior to the placement of the slab. The loop shall be located within 18 inches (458 mm) of the inside of the exterior perimeter foundation walls. Flat mat materials shall not be spaced further than 20 feet (6096 mm) between runs and shall communicate with the bottom of the concrete slab. Where foundation walls, grade beams, or similar separate the under-slab areas, the mat shall communicate through the separations, into each separate area and form a continuous loop around the exterior perimeter foundation walls. Both ends of the loop shall enter a "T" or equivalent connection from either side to reduce restrictions at the point of connection to the riser.

Section AF103.5.3 Vent pipe is amended by adding an exception as follows:

Exception: For manufactured houses, the vent pipe is not required to extend vertically through *building* floors and the roof where an active wall vent in accordance with Section AF103.13 is installed.

Section AF103.6.1 Vent pipe is amended by adding an exception as follows:

Exception: For new basement additions and manufactured houses, the vent pipe is not required to extend vertically through *building* floors and the roof where an active wall vent in accordance with Section AF103.13 is installed.

Section AF103.6.2 Multiple vent pipes is amended by adding an exception as follows:

Exception: A separate vertical vent pipe is not required in a separate sub-slab area where a minimum of 2 penetrations are provided through the footing or barrier adjacent to a vented sub-slab area. Each penetration shall be a minimum of 12 sq in (0.093 m^2) for each 10 feet (3048 mm) or less of footing or barrier length.

Section AF103.8 Vent pipe accessibility is deleted in its entirety and amended to read as follows:

AF103.8 Vent pipe accessibility. Access to radon vent pipes and a space for future fan installation shall be provided in accessible attic or roof top areas outside the habitable space. Access for future fans shall not be located in *crawl spaces*, *basements*, below *grade*, or below habitable spaces. Fans located in unvented attic space shall be isolated in an enclosure that does not communicate with the rest of the attic space. The fan enclosure shall be sealed against air leakage and shall be vented to the outdoors.

Section AF103.13 Exterior wall vent is added as follows:

Section AF103.13 Exterior wall vent. The vent pipe for new *basement additions* and manufactured houses may be installed on the outside of the *building* when in accordance with all the following:

1. The vent pipe shall be an active system with fan locations compliant with section AF103.8.
2. The vent pipe shall extend vertically past the roof eave and terminate not less than 12 inches (305 mm) above the surface of the roof covering.
3. The vent pipe termination shall be no less than 3 feet (914 mm) above any forced-air inlet located within 10 feet (3048 mm), not less than 2 feet (610 mm) above any window or other opening located within 10 feet (3048 mm), and not less than 10 feet (3048 mm) from any window or other opening in adjoining or adjacent *buildings*.

4. The vent pipe shall not terminate over public walkways or over an area where condensate or vapor could create a nuisance or hazard or could be detrimental to the operation of regulators, relief valves or other equipment.
5. Piping joints and connections to fans and other components that are subject to fan- induced positive pressure shall be tested for leakage while the system is operating normally. Leak tests shall be conducted with a liquid bubble solution or other *approved* method.

APPENDIX AJ
EXISTING BUILDINGS AND STRUCTURES

Appendix AJ is deleted and replaced in its entirety as follows:

SECTION AJ101

PURPOSE AND INTENT

AJ101.1 Scope. The provisions of this appendix shall apply to the *repair, alteration, addition*, *change of occupancy*, and *relocation* of existing *buildings* regulated by this code.

Exceptions. Work performed in accordance with the *Denver Existing Building Code* deemed to comply with the provisions of this appendix.

AJ101.2 Purpose. The purpose of these provisions is to encourage the continued use or reuse of legally existing *buildings* and *structures*. These provisions are intended to permit work in existing *buildings* that is consistent with the purpose of this code. Compliance with these provisions is deemed to meet the requirements of this code.

SECTION AJ102

COMPLIANCE

AJ102.1 Classification of Work. Work in existing *buildings* shall be classified into categories of work: *repair, alteration, addition, change of occupancy*, and *relocation*. Historic *buildings* shall comply with the requirements of AJ110.

AJ102.1.1 Repairs. *Repairs* shall comply with the requirements of AJ104 and AJ105.

AJ102.1.2 Alterations. *Alterations* shall comply with the requirements of AJ104 and AJ106.

AJ102.1.3 Additions. *Additions* shall comply with the requirements of AJ104 and AJ107.

AJ102.1.4 Change of Occupancy. A *change of occupancy* shall comply with the requirements of AJ104 and AJ108.

AJ102.1.5 Relocation. Relocated *buildings* shall comply with the requirements of AJ109.

AJ102.2 Multiple categories of work. Work of more than one category shall be part of a single work project. Related work permitted within a 12-month period shall be considered to be a single work project. Where a project includes one category of work in one *building* area and another category of work in a separate and unrelated area of the *building*, each project area shall comply with the requirements of the respective category of work. Where a project with more than one category of work is performed in the same area or in related areas of the *building*, the project shall comply with the requirements of the more stringent category of work.

AJ102.3 Work area. The work area shall be identified on the construction documents.

AJ102.4 Equivalent alternatives. These provisions are not intended to prevent the use of any alternative material, alternative design or alternative method of construction not specifically prescribed herein, provided that any alternative has been deemed to be equivalent and its use authorized by the *building official* as allowed through processes found in Article 1, Section 1 of the Denver Building Code.

AJ102.5 More restrictive requirements. *Buildings* or systems in compliance with the requirements of this code for new construction do not need to comply with any more restrictive requirement of these provisions.

AJ102.6 Features exceeding code requirements. Elements, components, and systems of existing *buildings* with features regulated by this code that exceed the requirements of this code for new construction that are not otherwise required as part of *approved* alternative compliance pathway in accordance with DBC Section 104 may be modified as long as they remain in compliance with the applicable requirements for new construction.

SECTION AJ103
DEFINITIONS

AJ103.1 Scope. For purposes of this appendix, terms used are defined as follows:

ALTERATION. The change, strengthening or addition of load-bearing elements; the refinishing, replacement, bracing, strengthening, upgrading or extensive *repair* of existing materials, elements, components, equipment, or fixtures; the reconfiguration of any space; the addition or elimination of any door or window; the reconfiguration or extension of any system; or the installation of any additional equipment.

CATEGORIES OF WORK. The nature and extent of construction work undertaken in an existing *building*. The categories of work covered in this appendix are *repair*, *alteration*, addition, change of occupancy, and relocation

CHANGE OF OCCUPANCY. Any of the following shall be considered a change of occupancy where this code requires a greater degree of safety, accessibility, structural strength, fire protection, means of egress, ventilation or sanitation than is existing in the current *building* or *structure*:

1. Any change in the occupancy classification of a *building* or *structure*.
2. Any change in the purpose of, or a change in the level of activity within, a *building* or *structure.*
3. A *change of use.*

CHANGE OF USE. A change in the use of a *building* or a portion of a *building*, within the same group classification, for which there is a change in application of the code requirements.

DANGEROUS. Any *building*, *structure*, or portion thereof that meets any of the conditions described below shall be deemed dangerous:

1. The *building* or *structure* has collapsed, has partially collapsed, has moved off its foundation or lacks the necessary support of the ground.
2. There exists a significant risk of collapse, detachment or dislodgement of any portion, member, appurtenance or ornamentation of the *building* or *structure* under permanent, routine or frequent loads; under actual loads already in effect; or under snow, wind, rain, flood, earthquake or other environmental loads when such loads are imminent.

EQUIPMENT OR FIXTURE. Any plumbing, heating, electrical, ventilating, air-conditioning, refrigerating and fire protection equipment; and elevators, dumb waiters, boilers, pressure vessels, and other mechanical facilities or installations that are related to *building* services.

HISTORIC BUILDING. Any *building* or *structure* that is one or more of the following:

1. Listed, or certified as eligible for listing, by the State Historic Preservation Officer or the Keeper of the National Register of Historic Places, in the National Register of Historic Places.
2. Designated as individually historic under an applicable state or local law.
3. Certified as a contributing resource within a National Register-listed, or a state-listed, or locally designated historic district.

HISTORIC PRESERVATION PROFESSIONAL. An individual meeting the Professional Qualification Standards for Architectural History, Architecture, or Historic Architecture, as outlined by the National Park Service in Code of Federal Regulations, 36 CFR Part 61.

MATERIALS AND METHODS REQUIREMENTS. Those requirements in this code that specify material standards; details of installation and connection; joints; penetrations; and continuity of any element, component, or system in the *building*. The required quantity, fire resistance, flame spread, acoustic or thermal performance, or other performance attribute is specifically excluded from materials and methods requirements.

RELOCATION. The movement of an existing *building* from one lot to another, the movement of an existing *building* within the same lot, or any change to the boundaries of the lot for an existing *building* with or without movement of the existing *building*.

REPAIR. The reconstruction, replacement, or renewal of any part of an existing *building* for the purpose of its maintenance or to correct damage. *Repairs* include the patching, restoration or minor replacement of materials, elements, components, equipment, or fixtures for the purposes of maintaining those materials, elements, components, equipment, or fixtures in good or sound condition. *Repairs* exclude complete or substantial replacement of that portion of the existing *building* and new work.

SUBSTANTIAL DAMAGE. To determine compliance with the flood provisions of this code, damage of any origin sustained by a *structure* whereby the cost of restoring the *structure* to its before-damaged condition would equal or exceed 50 percent of the market value of the *structure* before the damage occurred.

SUBSTANTIAL IMPROVEMENT. To determine compliance with the flood provisions of this code, any *repair*, *alteration*, addition or improvement of a *building* or *structure*, the cost of which equals or exceeds 50 percent of the market value of the *structure* before the improvement or *repair* is started. If the *structure* has sustained substantial damage, any *repairs* are considered substantial improvement regardless of the actual *repair* work performed. The term does not, however, include either of the following:

1. Any project for improvement of a *building* required to correct existing health, sanitary or safety code violations identified by the *building official* and that is the minimum necessary to ensure safe living conditions.
2. Any *alteration* of a historic *structure*, provided that the *alteration* will not preclude the *structure's* continued designation as a historic *structure*.

SUBSTANTIAL STRUCTURAL ALTERATION. An *alteration* in which the gravity load-carrying structural elements altered within a 5-year period support more than 30 percent of the total floor and roof area of the *building* or *structure*. The areas to be counted toward the 30 percent shall include mezzanines, penthouses, and in-filled courts and shafts tributary to the altered structural elements.

SUBSTANTIAL STRUCTURAL DAMAGE. A condition where any of the following apply:

1. The vertical elements of the lateral force-resisting system have suffered damage such that the lateral load-carrying capacity of any story in any horizontal direction has been reduced by more than 33 percent from its pre-damage condition.
2. The capacity of any vertical component carrying gravity load, or any group of such components, that has a tributary area more than 30 percent of the total area of the *structure*'s floor(s) and roof(s) has been reduced more than 20 percent from its pre-damage condition, and the remaining capacity of such affected elements, with respect to all dead and live loads, is less than 75 percent of that required by this code for new *buildings* of similar *structure*, purpose and location.
3. The capacity of any structural component carrying snow load, or any group of such components, that supports more than 30 percent of the roof area of similar construction has been reduced more than 20 percent from its pre-damage condition, and the remaining capacity with respect to dead, live and snow loads is less than 75 percent of that required by this code for new *buildings* of similar *structure*, purpose, and location.

UNSAFE. See Article I, Denver Building Code Section 105.

WORK AREA. That portion or portions of a *building* consisting of any *repair*, *alteration*, addition, change of occupancy and relocation as indicated on the construction documents. Work area excludes other portions of the *building* where incidental work entailed by the intended work must be performed, and portions of the *building* where work not initially intended by the owner is specifically required by this code.

SECTION AJ104

PROVISIONS APPLICABLE TO ALL CATEGORIES OF WORK

AJ104.1 General. Regardless of the category of work being performed, the work shall not cause the *structure* to become unsafe or adversely affect the performance of the *building*; shall not cause an existing mechanical or plumbing system to become unsafe, hazardous, insanitary, or overloaded; and unless expressly permitted by these provisions, the work shall not make the *building* any less compliant with this code than it was before the work was undertaken.

AJ104.2 Existing materials. Materials already in use in a *building* that were in compliance with requirements or approvals in effect at the time of their erection or installation shall be permitted to remain in use unless determined by the *building official* to be unsafe.

AJ104.3 New and replacement materials. Except as otherwise required or permitted by this code, materials permitted by this code for new construction shall be used. Like materials shall be permitted for *repairs* and *alterations*, provided that unsafe conditions are not created. Hazardous materials shall not be used where the code for new construction would not permit their use in *buildings* of similar occupancy, purpose, and location.

AJ104.4 Flood hazard areas. Work performed in existing *buildings* located in a flood hazard area as established by Table R301.2 shall be subject to the provisions of Denver Commercial Building Code Section 1612.3.

AJ104.5 Fire-resistance rated construction. Fire-resistance rated construction of existing *buildings* or portions thereof shall comply with this section.

AJ104.5.1 Archaic materials and assemblies. The Appendix to Resource A Guidelines on Fire Ratings of Archaic Materials and Assemblies of the *Denver Existing Building Code* shall be incorporated into this appendix in its entirety. The *fire-resistance rating* of existing assemblies may be established in accordance with the tabular prescriptive requirements of the Appendix to Resource A and the requirements of this section.

AJ104.5.1.1 Condition of existing assemblies. The effects of age and wear and tear shall be repaired so that the assembly is in good repair and the original thickness of all components is restored.

AJ104.5.1.2 Penetrations of existing assemblies. All penetrations in the assembly shall be packed with noncombustible cementitious materials and so fixed that the packing material will not fall out when it loses its water of hydration.

Exception: Penetrations in accordance with Section R302.4.1 or Section R302.4.2

AJ104.6 Smoke alarms. Existing *buildings* shall be provided with smoke alarms in accordance with Section R314.

Exceptions:

1. *Repairs.*
2. The removal and replacement or the covering of existing materials, elements, equipment, or fixtures using new materials, elements, equipment, or fixtures that serve the same purpose.
3. Work involving the exterior surfaces of *buildings*, such as the replacement of roofing or siding, the addition or replacement of windows or doors, or the addition of porches or decks.
4. Installation, *alteration*, or *repairs* of plumbing or mechanical systems, other than fuel-burning appliances.

AJ104.7 Carbon Monoxide Detection. Existing *buildings* shall be provided with carbon monoxide detection in accordance with Section R315.

Exceptions:

1. *Repairs.*
2. The removal and replacement or the covering of existing materials, elements, equipment, or fixtures using new materials, elements, equipment, or fixtures that serve the same purpose.
3. Work involving the exterior surfaces of *buildings*, such as the replacement of roofing or siding, the addition or replacement of windows or doors, or the addition of porches or decks.

4. Installation, *alteration*, or *repairs* of plumbing or mechanical systems, other than fuel-burning appliances.

AJ104.8 Replacement windows. Regardless of the category of work, where an existing window, including the sash and glazed portion, or safety glazing is replaced, the replacement window or safety glazing shall comply with the requirements of Sections AJ104.8.1 through AJ104.8.4, as applicable.

AJ104.8.1 Energy efficiency. Replacement windows shall comply with the requirements of Chapter 11.

AJ104.8.2 Safety glazing. Replacement glazing in hazardous locations shall comply with the safety glazing requirements of Section R308.

AJ104.8.3 Replacement windows for emergency escape and rescue openings. Where windows are required to provide *emergency escape and rescue openings*, replacement windows shall be exempt from Sections R310.2 and R310.4.4 provided that the replacement window meets the following conditions:

1. The replacement window is the manufacturer's largest standard size window that will fit within the existing frame or existing rough opening. The replacement window shall be permitted to be of the same operating style as the existing window or a style that provides for an equal or greater window opening area than the existing window.
2. An existing operable window shall provide a minimum net clear opening of 4 square feet ($0.38m^2$) with a minimum net clear opening height of 22 inches (559 mm) and a minimum net clear opening width of 20 inches (508 mm).
3. Where the replacement window is not part of a change of occupancy. Window opening control devices and fall prevention devices complying with ASTM F2090 shall be permitted for use on windows serving as required emergency escape and rescue openings.

AJ104.8.3.1 Control devices. Emergency escape and rescue openings with window opening control devices or fall prevention devices complying with ASTM F2090, after operation to release the control device allowing the window to fully open, shall not reduce the net clear opening area of the window unit. Emergency escape and rescue openings shall be operational from the inside of the room without the use of keys or tools.

AJ104.8.4 Window control devices. Window opening control devices or fall prevention devices complying with ASTM F2090 shall be installed where an existing window is replaced and where all of the following apply to the replacement window:

1. The window is operable.
2. One of the following applies:
   2.1. The window replacement includes replacement of the sash and the frame.
   2.2. The window replacement includes the sash only when the existing frame remains.
3. The bottom of the clear opening of the window opening is at a height less than 24 inches (610 mm) above the finished floor.
4. The window will permit openings that will allow passage of a 4-inch-diameter (102 mm) sphere where the window is in its largest opened position.
5. The vertical distance from the top of the sill of the window opening to the finished *grade* or other surface below, on the exterior of the *building*, is greater than 72 inches (1829 mm).

AJ104.9 New structural members and connections. New structural members and connections shall comply with the detailing provisions of this code for new *buildings* of similar *structure*, purpose, and location.

Exception: Where alternative design criteria are specifically *approved* through processes defined in Article 1, Section 1 of the Denver Building Code.

AJ104.10 Energy Conservation. Work performed in existing *buildings* shall be in accordance with the energy conservation requirements in Chapter 11 of this code.

AJ104.11 Radon Control Methods. Work performed in existing *buildings* shall be in accordance with the radon control methods in Appendix AF of this code.

AJ104.12 Accessibility. Work performed in existing *buildings* shall be in accordance with the accessibility requirements in Section 306 of the *Denver Existing Building Code* or as outlined in this code for new construction.

SECTION AJ105
REPAIRS

AJ105.1 Flood Hazard Areas. In flood hazard areas, *repairs* that constitute substantial improvement shall require that the *building* comply with Section R322.

AJ105.2 Fire Protection. *Repairs* shall be done in a manner that maintains the level of fire protection provided.

AJ105.3 Means of Egress. *Repairs* shall be done in a manner that maintains the level of protection provided for the means of egress.

AJ105.4 Structural. Structural *repairs* shall be in accordance with Sections AJ105.4.1 through AJ105.4.6.

AJ105.4.1 Minimum Design Loads. The minimum design loads for the *structure* shall be the loads applicable at the time the *building* was constructed, provided that a dangerous condition is not created. Structural elements that are uncovered during the *repair* and that are found to be unsound or dangerous shall be made to comply with the applicable requirements of this code.

AJ105.4.2 Repairs for less than substantial structural damage. Unless otherwise required by this section, for damage less than substantial structural damage, the damaged elements shall be permitted to be restored to their pre-damaged condition.

AJ105.4.2.1 Snow damage. Structural components whose damage was caused by or related to snow load effects shall be repaired, replaced, or altered to comply with the framing requirements of this code.

AJ105.4.3 Substantial structural damage to vertical elements of the lateral force-resisting system. A *building* that has sustained substantial structural damage to the vertical elements of its lateral force-resisting system shall be evaluated in accordance with Section AJ105.4.3.1, and either repaired in accordance with Section AJ105.4.3.2 or repaired and retrofitted in accordance with Section AJ105.4.3.3, depending on the results of the evaluation.

AJ105.4.3.1 Evaluation. The *building* shall be evaluated by a registered design professional, and the evaluation findings shall be submitted to the *building official*. The evaluation shall establish whether the damaged *building*, if repaired to its pre-damage state, would comply with the framing requirements of this code.

AJ105.4.3.2 Extent of repair for compliant buildings. If the evaluation establishes that the *building* in its pre-damage condition complies with the provisions of Section AJ105.4.3.1, then the damaged elements shall be permitted to be restored to their pre-damage condition.

AJ105.4.3.3 Extent of repair for noncompliant buildings. If the evaluation does not establish that the *building* in its pre-damage condition complies with the provisions of Section AJ105.4.3.1, then the *building* shall be retrofitted to comply with the provisions of this section. The wind loads for the *repair* and retrofit shall be those required by the building code in effect at the time of original construction, unless the damage was caused by wind, in which case the wind loads shall be in accordance with this code. The seismic loads for this retrofit design shall be those required by the building code in effect at the time of original construction, but not less than the reduced seismic forces.

AJ105.4.4 Substantial structural damage to gravity load-carrying components. Gravity load-carrying components that have sustained substantial structural damage shall be rehabilitated to comply with the applicable provisions for dead, live and snow loads in the *Denver Commercial Building Code*. Undamaged gravity load carrying components that receive dead, live or snow loads from rehabilitated components shall also be rehabilitated if required to comply with the design loads of the rehabilitation design.

AJ105.4.4.1 Lateral force-resisting elements. Regardless of the level of damage to vertical elements of the lateral force-resisting system, if substantial structural damage to gravity load-carrying components was caused primarily by wind or seismic effects, then the *building* shall be evaluated in accordance with Section AJ105.4.3.1 and, if noncompliant, retrofitted in accordance with Section AJ105.4.3.3.

AJ105.4.5 Substantial structural damage to snow load-carrying components. Where substantial structural damage to any snow load-carrying components is caused by or related to snow load effects, any components required to carry snow loads on roof framing of similar construction shall be repaired, replaced or retrofitted to comply with the framing requirements of this code.

AJ105.4.6 Flood hazard areas. In flood hazard areas, *buildings* that have sustained substantial structural damage shall be brought into compliance with Section R322.

AJ105.5 Electrical. *Repair* or replacement of existing electrical wiring and equipment undergoing *repair* with like material shall be permitted.

Exceptions:

1. Replacement of electrical receptacles shall comply with the requirements of the *Electrical Code of the City and County of Denver*.
2. Plug fuses of the Edison-base type shall be used for replacements only where there is no evidence of overfusing or tampering in accordance with the applicable requirements of the *Electrical Code of the City and County of Denver*.
3. For replacement of non-grounding-type receptacles with grounding-type receptacles and for branch circuits that do not have an equipment grounding conductor in the branch circuitry, the grounding conductor of a grounding-type receptacle outlet shall be permitted to be grounded to any accessible point on the grounding electrode system, or to any accessible point on the grounding electrode conductor, as allowed and described in of the *Electrical Code of the City and County of Denver*.

AJ105.6 Plumbing materials and supplies. The following plumbing materials and supplies shall not be used:

1. All-purpose solvent cement, unless listed for the specific application.
2. Flexible traps and tailpieces, unless listed for the specific application.
3. Solder having more than 0.2-percent lead in the *repair* of potable water systems.

AJ105.7 Water closets. Where any water closet is replaced with a newly manufactured water closet, the replacement water closet shall comply with the requirements of Section P2903.2.

SECTION AJ106
ALTERATIONS

AJ106.1 Newly constructed elements. Unless expressly permitted by this appendix, new construction elements, components, systems, and spaces shall comply with the requirements of this code for new construction.

AJ106.2 Materials and methods. The work shall comply with the materials and methods requirements of this code.

AJ106.3 Interior wall and ceiling finishes. Interior wall and ceiling finishes shall be in accordance with Sections AJ106.3.1 through AJ106.3.3 and the requirements of Section R331.

AJ106.3.1 Replacement. Like materials shall be permitted for interior wall and ceiling finishes that are being replaced, provided that unsafe conditions are not created, and the material complies with the requirements of Section R331.

Exception: Wood paneling and textile wall coverings used as an interior finish shall comply with the flame spread requirements of Section R302.9.

AJ106.3.2 Newly installed. Newly installed interior wall and ceiling finishes shall comply with the requirements of Sections R302.9 and R331.

AJ106.3.3 Extensive alterations. Where the total work area included in the *alteration* exceeds 50 percent of the floor area of the *dwelling unit*, the interior finish of walls and ceilings in any work area shall comply with the requirements of Section R302.9. Existing interior finish materials that do not comply with those requirements shall be removed or shall be treated with an approved fire-retardant coating in accordance with the manufacturer's instructions to secure compliance with the requirements of this section.

AJ106.4 Fire Protection. *Alterations* shall be done in a manner that maintains the level of fire protection provided.

AJ106.4.1 Separation walls. Where the total work area included in the *alteration* exceeds 50 percent of the floor area of the *dwelling unit* and the work area is in an attached *dwelling unit*, walls separating *dwelling units* that are not continuous from the foundation to the underside of the roof sheathing shall be constructed to provide a continuous fire separation using construction materials consistent with the existing wall or complying with the requirements for new *structures*. Performance of work shall be required only on the side of the wall of the *dwelling unit* that is part of the work area.

AJ106.5 Ventilation. Ventilation shall be in accordance with this section.

AJ106.5.1 Replacement windows. Replacement windows and newly added openable windows are not required to comply with the light and ventilation requirements of Section R303.

AJ106.5.2 Reconfigured spaces. Reconfigured spaces intended for occupancy and spaces converted to *living space* in any work area shall be provided with ventilation in accordance with Section R303.

AJ106.6 Ceiling height. *Living space* created in existing *basements* built prior to 1990 shall have ceiling heights of not less than 6 feet 8 inches (2032 mm). Existing finished *ceiling heights* in *basements* without *living space* shall not be reduced.

Exception: Beams, girders, ducts, or other obstructions in *basements* containing *living space* shall be permitted to project to within 6 feet 4 inches (1931 mm) of the finished floor.

AJ106.7 Door and window dimensions. Minor reductions in the clear opening dimensions of replacement doors and windows that result from the use of different materials shall be allowed, whether or not they are permitted by this code.

AJ106.8 Means of egress. *Alterations* shall be done in a manner that maintains the level of protection provided for the means of egress.

Exception: A change in occupancy resulting in floor levels without any *living space* converted to *living space*, or a portion thereof, shall be provided with vertical egress in accordance with R311.4.

AJ106.8.1 Stairways. Stairs shall support a minimum concentrated load at any location on a tread of 300 pounds and shall maintain the level of protection provided for the means of egress. The requirements of Sections AJ106.8.1.1 through AJ106.8.1.5 shall apply to stairs along the egress path from the work area to the required egress door. Stairs or stairways that do not meet the criteria below may be required to be repaired or replaced.

AJ106.8.1.1 Width. *Stairs* not otherwise being altered or modified shall be permitted to maintain their current clear width at, above, and below existing *handrails*.

AJ106.8.1.2 Headroom. *Stairs* not otherwise being altered shall be permitted to maintain the current finished headroom. Headroom height on existing stairs being altered or modified shall not be reduced below the existing *stairway* finished headroom.

AJ106.8.1.3 Landings. *Stairs* not otherwise being altered shall be permitted to maintain the current landing depth and width. Landings serving existing stairs being altered or modified shall not be reduced below the existing *stairway* landing depth and width.

AJ106.8.1.4 Illumination. *Stairways* within the work area shall be provided with illumination in accordance with Section R303.7 and R303.8.

AJ106.8.1.5 Rise and Run. Stairs not otherwise altered shall have treads with a depth of not less than 8-inches and a stair risers shall have a height not exceeding 9-inches.

AJ106.8.2 Handrails. The requirements of Sections AJ106.8.2.1 and AJ106.8.2.2 shall apply to *handrails* from the work area floor to the required egress door.

AJ106.8.2.1 Minimum requirement. Every required exit *stairway* that has four or more *risers*, and is not provided with one *handrail*, or in which the existing *handrails* cannot support a load of 200 pounds applied in any direction, shall be provided with handrails for the full length of the *stairway* on at least one side.

AJ106.8.2.2 Design. *Handrails* shall be designed and installed in accordance with Section R311.

AJ106.8.3 Guards. The requirements of Sections AJ106.8.3.1 and AJ106.8.3.2 shall apply to guards along the egress path from the work area to the required egress door.

AJ106.8.3.1 Minimum requirement. Every open portion of a *stairway*, landing, or balcony that is more than 30 inches (762 mm) above the floor or *grade* below and is not provided with *guards*, or those portions in which existing guards cannot support a load of 200 pounds applied in any direction, shall be provided with *guards*.

AJ106.8.3.2 Design. *Guards* shall be designed and installed in accordance with Section R312.

AJ106.9 Structural. Structural *alterations* shall be in accordance with Sections AJ105.9.1 through AJ105.9.4.

AJ106.9.1 Minimum design loads. The minimum design loads for the *structure* shall be the loads applicable at the time the *building* was constructed, provided that a dangerous condition is not created. Structural elements that are uncovered during the *alteration* and that are found to be unsound or dangerous shall be made to comply with the applicable requirements of this code.

AJ106.9.2 Existing structural elements carrying gravity loads. Any existing gravity load-carrying structural element for which an *alteration* causes an increase in design dead, live or snow load, including snow drift effects, of more than 5 percent shall be replaced or altered as needed to comply with the faming requirements of this code. Any existing gravity load-carrying structural element whose gravity load-carrying capacity is decreased as part of the *alteration* shall comply with the framing requirements of this code.

Exception: *Buildings* in which the increased dead load is due entirely to the addition of a second layer of roof covering weighing 3 pounds per square foot (0.1437 kN/m2) or less over an existing single layer of *roof covering*.

AJ106.9.3 Existing structural elements resisting lateral loads. Except as permitted by Section AJ106.9.4, where the *alteration* increases design lateral loads, or where the *alteration* results in prohibited structural irregularity as defined in ASCE 7, or where the *alteration* decreases the capacity of any existing lateral load-carrying structural element, the *structure* of the altered *building* or *structure* shall comply with the framing requirements of this code.

AJ106.9.4 Voluntary lateral force-resisting system alterations. Structural *alterations* that are intended exclusively to improve the lateral force-resisting system and are not required by other sections of this code shall not be required to meet the framing requirements of this code, provided that the following conditions are met:

1. The capacity of existing structural systems to resist forces is not reduced.
2. New structural elements are detailed and connected to existing or new structural elements as required by this code for new construction.
3. New or relocated nonstructural elements are detailed and connected to existing or new structural elements as required by this code for new construction.
4. The *alterations* do not create a structural irregularity as defined in ASCE 7 or make an existing structural irregularity more severe.

AJ106.10 Electrical. Electrical *alterations* shall be in accordance with this section.

AJ106.10.1 Materials and methods. Newly installed electrical equipment and wiring relating to work done in any work area shall comply with the materials and methods requirements of the *Electrical Code of the City and County of Denver*.

AJ106.10.2 Electrical service. Service to the *dwelling unit* shall be not less than 100 ampere, three-wire capacity and service equipment shall be dead front having no live parts exposed that could allow accidental contact. Type "S" fuses shall be installed where fused equipment is used.

Exception: Existing service of 60 ampere, three-wire capacity, and feeders of 30 ampere or larger two- or three-wire capacity shall be accepted if adequate for the electrical load being served.

AJ106.10.3 Additional electrical requirements. Where the work area includes any of the following areas within a *dwelling unit*, the requirements of Sections AJ106.10.3.1 through AJ106.10.3.5 shall apply.

AJ106.10.3.1 Enclosed areas. Enclosed areas other than closets, kitchens, *basements*, *garages*, hallways, laundry areas and bathrooms shall have not less than two duplex receptacle outlets, or one duplex receptacle outlet and one ceiling- or wall-type lighting outlet.

AJ106.10.3.2 Kitchen and laundry areas. Kitchen areas shall have not less than two duplex receptacle outlets. Laundry areas shall have not less than one duplex receptacle outlet located near the laundry equipment and installed on an independent circuit.

AJ106.10.3.3 Ground-fault circuit interruption. Ground-fault circuit interruption shall be provided on newly installed receptacle outlets if required by the *Electrical Code of the City and County of Denver*.

AJ106.10.3.4 Lighting outlets. Not less than one lighting outlet shall be provided in every bathroom, hallway, stairway, attached *garage* and detached *garage* with electric power to illuminate outdoor entrances and exits, and in utility rooms and *basements* where these spaces are used for storage or contain equipment requiring service.

AJ106.10.3.5 Clearance. Clearance for electrical service equipment shall be provided in accordance with the *Electrical Code of the City and County of Denver*.

CHAPTER AJ107
ADDITIONS

AJ107.1 Scope. An addition to a *building* or *structure* shall comply with this code for new construction without requiring the existing *building* or *structure* to comply with any requirements of those codes or of these provisions, except as required by this chapter. Where an addition impacts the existing *building* or *structure*, that portion shall comply with this code.

AJ107.2 Other work. Any *repair* or *alteration* work within an existing *building* to which an *addition* is being made shall comply with the applicable requirements for the category of work.

AJ107.3 Structural. Structural *additions* shall be in accordance with this section.

AJ107.3.1 Additional gravity loads. Any existing gravity load-carrying structural element for which an addition and its related *alterations* cause an increase in design dead, live or snow load, including snow drift effects, of more than 5 percent shall be replaced or altered as needed to comply with the faming requirements of this code. Any existing gravity load-carrying structural element whose gravity load-carrying capacity is decreased as part of the *alteration* shall comply with the framing requirements of this code.

AJ107.3.2 Lateral force-resisting system. Where the addition is structurally independent of the existing *structure*, existing lateral load-carrying structural elements shall be permitted to remain unaltered. Where the addition is not structurally independent of the existing *structure*, the existing *structure* and its addition acting together as a single *structure* shall comply with the framing requirements of this code.

AJ107.3.3 Flood hazard areas. Additions and foundations in flood hazard areas shall comply with the following requirements:

1. For horizontal additions that are structurally interconnected to the existing *building*:
   - 1.1. If the addition and all other proposed work, when combined, constitute substantial improvement, the existing *building* and the addition shall comply with Section R322 of this code.
   - 1.2. If the addition constitutes substantial improvement, the existing *building* and the addition shall comply with Section R322 of this code.

2.For horizontal additions that are not structurally interconnected to the existing *building*:

   - 2.1. The addition shall comply with Section R322 of this code.
   - 2.2. If the addition and all other proposed work, when combined, constitute substantial improvement, the existing *building* and the addition shall comply with Section R322 of this code

3. For vertical additions and all other proposed work that, when combined, constitute substantial improvement, the existing *building* shall comply with Section R322 of this code.
4. For a raised or extended foundation, if the foundation work and all other proposed work, when combined, constitute substantial improvement, the existing *building* shall comply with Section R322 of this code.
5. For a new foundation or replacement foundation, the foundation shall comply with Section R322 of this code.

SECTION AJ108
CHANGE OF OCCUPANCY

AJ108.1 Scope. The provisions of this chapter shall apply where a change of occupancy occurs.

AJ108.2 Other work. Any work undertaken in connection with a change in use or change in occupancy classification shall conform to the applicable requirements of this code applicable to the work performed, and to the requirements of AJ108.

AJ108.3 Light and ventilation. Light and ventilation shall comply with the requirements R303 of this code.

AJ108.4 Fire sprinkler system. An automatic sprinkler system shall not be required in *one- or two-family dwellings*, *townhouses*, or *accessory structures*.

AJ108.5 Fire-Resistant Construction. The provisions of this section shall apply to *buildings* or portions thereof undergoing a change of occupancy classification. This includes a *change of occupancy* classification within a group as well as a change of occupancy classification from one group to a different group. Hazard categories related to *fire-resistance ratings* of exterior walls shall be in accordance with Table AJ108.1.

TABLE AJ108.1

EXPOSURE OF EXTERIOR WALLS HAZARD CATEGORIES

RELATIVE HAZARD	DENVER COMMERCIAL BUILDING CODE OCCUPANCY CLASSIFICATIONS	DENVER RESIDENTIAL CODE OCCUPANCY CLASSIFICATION
1 (Highest Hazard)	H	
2	F-1; M; S-1	
3	A; B; E; I; R	One- and two-family *dwellings* and *townhouses*
4 (Lowest Hazard)	F-2; S-2; U	*Accessory structures*

AJ108.5.1 Exterior wall rating for change of occupancy classification to a higher-hazard category. Where a change of occupancy classification is made to a higher hazard category as shown in Table AJ108.1, construction, projections, openings, and penetrations of exterior walls of dwellings and accessory buildings shall have fire resistance and exterior opening protective as required by Section R302.

AJ108.5.2 Exterior wall rating for change of occupancy classification to an equal or lesser-hazard category. Where a change of occupancy classification is made to an equal or lesser-hazard category as shown in Table AJ108.1, existing exterior walls, including openings, shall be accepted.

AJ108.5.3 Opening protectives. Openings in exterior walls shall be protected as required by this code. Where openings in the exterior walls are required to be protected because of their distance from the lot line, the sum of the area of such openings shall not exceed 50 percent of the total area of the wall in each story.

Exceptions:

1. Where this code permits openings in excess of 50 percent.
2. Exterior opening protectives are not required where the change of occupancy group is to an equal or lower hazard classification in accordance with Table AJ108.1.

AJ108.6 Fire-resistance separation walls. Fire-resistance separation walls shall be in accordance with this section.

AJ108.6.1 Townhouses. *Townhouse units* shall be separated from adjoining units in accordance with Section R302.2 of this code.

AJ108.6.2 Two-family dwellings. *Dwelling units* in two-family *dwellings* shall be separated shall be separated from each other in accordance with Section R302.3 of this code.

AJ108.8 Means of egress. A change of occupancy shall comply with Section AJ108.8.1 through AJ108.8.4. A change of occupancy classification shall comply with Section AJ108.8.1 through AJ108.8.5.

AJ108.8.1 Handrails. The requirements of Sections AJ108.8.1.1 and AJ108.8.1.2 shall apply to *changes of occupancy* or portions thereof.

AJ108.8.1.1 Minimum requirement. Every required exit stairway that has four or more risers, and is not provided with one handrail, or in which the existing *handrails* are judged to be in danger of collapsing, shall be provided with handrails for the full length of the *stairway* on at least one side.

AJ108.8.1.2 Design. Handrails shall be designed and installed in accordance with Section R311.

AJ108.8.2 Guards. The requirements of Sections AJ108.8.2.1 and AJ108.8.2.2 shall apply to changes of occupancy or portions thereof.

AJ108.8.2.1 Minimum requirement. Every open portion of a stairway, landing, or balcony that is more than 30 inches (762 mm) above the floor or *grade* below and is not provided with guards, or those portions in which existing guards are judged to be in danger of collapsing, shall be provided with *guards*.

AJ108.8.2.2 Design. *Guards* shall be designed and installed in accordance with Section R312.

AJ108.8.3 Emergency escape and rescue openings. Where a change of occupancy would require an emergency escape and rescue opening in accordance with Section R310 of this code, operable windows serving as the *emergency escape and rescue opening* shall comply with the following:

1. An existing operable window shall provide a minimum net clear opening of 4 square feet (0.38 m2) with a minimum net clear opening height 22 inches (559 mm) and a minimum net clear opening width of 20 inches (508 mm).
2. A replacement window where such window complies with both of the following:
   2.1. The replacement window meets the size requirements in Item 1.
   2.2. The replacement window is the manufacturer's largest standard size window that will fit within the existing frame or existing rough opening. The replacement window shall be permitted to be of the same operating style as the existing window or a style that provides for an equal or greater window opening area than the existing window.

AJ108.8.4 Required Vertical Egress. Floor levels without any *living space* converted to *living space*, or a portion thereof, shall be provided with vertical egress in accordance with R311.4.

AJ108.8.5 Change in occupancy classification. The provisions of this section shall apply to *buildings* or portions thereof undergoing a change of occupancy classification. This includes a change of occupancy classification within a group as well as a change of occupancy classification from one group to a different group. Hazard categories related to life safety and means of egress shall be in accordance with Table AJ108.2.

TABLE AJ108.2

MEANS OF EGRESS HAZARD CATEGORIES

RELATIVE HAZARD	DENVER COMMERCIAL BUILDING CODE OCCUPANCY CLASSIFICATIONS	DENVER RESIDENTIAL CODE OCCUPANCY CLASSIFICATION
1 (Highest Hazard)	H	
2	I-2; I-3; I-4	
3	A; E; I-1; M; R-1; R-2; R-4, Condition 2	
4	B; F-1; R-3; R-4, Condition 1; S-1	One- and two-family *dwellings* and *townhouses*
5 (Lowest Hazard)	F-2; S-2; U	*Accessory structures*

AJ108.8.5.1 Means of egress for change to a higher hazard category. Where a change of occupancy classification is made to a higher-hazard category (lower number) as shown in Table AJ108.2, the means of egress shall comply with the requirements of Section R311 of this code.

Exceptions:

1. Existing *stairways* including *handrails* and *guards* complying with the requirements of AJ106 shall be permitted for continued use.
2. Any *stairway* replacing an existing *stairway* within a space where the pitch or slope cannot be reduced because of existing construction shall not be required to comply with the maximum riser height and minimum tread depth requirements.
3. An operable window complying with Section AJ108.8.3 shall be accepted as an *emergency escape and rescue opening*.

AJ108.8.5.2 Means of egress for change of use to an equal or lower-hazard category. Where a change of occupancy classification is made to an equal or lesser-hazard category (higher number) as shown in Table AJ108.2, existing elements of the means of egress shall comply with the requirements of AJ106 for the new occupancy classification. Newly constructed or configured means of egress shall comply with the requirements of Section R311 of this code.

Exception: Any *stairway* replacing an existing stairway within a space where the pitch or slope cannot be reduced because of existing construction shall not be required to comply with the maximum riser height and minimum tread depth requirements.

AJ108.9 Structural requirements. Structural requirements for a *change of occupancy* shall be in accordance with this section.

AJ108.9.1 Live loads. Structural elements carrying tributary live loads from an area with a change of occupancy shall satisfy the requirements of Section R301. Design *live loads* for areas of new occupancy shall be based on Section R301 of this code.

AJ108.9.2 Snow and wind loads. Where a change of occupancy results in a *structure* being assigned to a higher risk category, the *structure* shall satisfy the requirements of Section R301 of this code.

AJ108.10 Electrical requirements. Electrical requirements for a *change of occupancy* shall be in accordance with this section.

AJ108.10.1 Unsafe conditions. Where the occupancy of an existing *building* or part of an existing *building* is changed, all unsafe conditions shall be corrected without requiring that all parts of the electrical system comply with the *Electrical Code of the City and County of Denver*

AJ108.10.2 Service upgrade. Where the occupancy of an existing *building* or part of an existing *building* is changed, electrical service shall be upgraded to meet the requirements of the *Electrical Code of the City and County of Denver* for the new occupancy.

AJ108.10.3 Number of electrical outlets. Where the occupancy of an existing building or part of an existing *building* is changed, the number of electrical outlets shall comply with the *Electrical Code of the City and County of Denver* for the new occupancy.

AJ108.11 Mechanical requirements. Where the occupancy of an existing *building* or part of an existing *building* is changed such that the new occupancy is subject to different kitchen exhaust requirements or to increased mechanical ventilation requirements in accordance with this code, the new occupancy shall comply with the respective exhaust system provisions of Chapter 15 of this Code.

AJ108.12 Plumbing requirements. Where the occupancy of an existing *building* or part of an existing *building* is changed such that the new occupancy is subject to increased or different plumbing fixture requirements or to increased water supply requirements in accordance with this code, the new occupancy shall comply with the intent of the respective code provisions.

SECTION AJ109
RELOCATION

AJ109.1 Other work. The *building* shall be safe for human occupancy. Any *repair*, *alteration*, or change of occupancy undertaken within the moved *structure* shall comply with the requirements of this code applicable to the work being performed. Any field fabricated elements shall comply with the requirements of this code.

AJ109.2 Location on the lot. The *building* shall be located on the lot in accordance with the requirements of this code.

AJ109.3 Fire Protection. Relocations as a result of a lot line reconfiguration shall be done in a manner that maintains the level of fire protection provided. All other relocations shall comply with the fire protection requirements of this code.

AJ109.4 Foundation. The foundation system of relocated *buildings* shall comply with this code.

AJ109.5 Connection to the foundation. The connection of the relocated *building* to the foundation shall comply with this code.

AJ109.6 Wind loads. *Buildings* shall comply with the wind provisions of this code.

Exceptions:

1. *Buildings* where wind loads at the new location are not higher than those at the previous location.
2. Structural elements whose stress is not increased by more than 10 percent.

AJ109.7 Snow loads. *Structures* shall comply with the snow loads of this code.

Exceptions:

1. *Structures* where snow loads at the new location are higher than those at the previous location.
2. Structural elements whose stress is not increased by more than 5 percent.

AJ109.8 Flood hazard areas. If relocated or moved into a flood hazard area, *structures* shall comply with Section R322 of this code.

AJ109.9 Required inspection and repairs. The *building official* shall be authorized to inspect, or to require approved professionals to inspect at the expense of the owner, the various structural parts of a relocated *building* to verify that structural components and connections have not sustained structural damage. Any *repairs* required by this code as a result of such inspection shall be made prior to the final approval.

SECTION AJ110
HISTORIC BUILDINGS

AJ110.1 Scope. Historic *buildings* subject to *repair*, *alteration*, addition, change of occupancy and relocation in conformance with this section shall not be required to comply with individual requirements of this code to the extent that such compliance would threaten, degrade, or destroy the historic building features, form, materials, or functions that are historic and character-defining.

AJ110.2 Compliance. The historic *building* or portion thereof shall be made to comply with the requirements of this code to the maximum extent feasible without threatening, degrading, or destroying the historic building features, form, materials, or functions that are historic and character-defining.

AJ110.3 Hazardous conditions. The historic *building* or portion thereof to remain shall not constitute a distinct life safety hazard and shall not otherwise be dangerous to human life or the public welfare.

AJ110.4 Historic building report. A Historic Building Report meeting the requirements of this section shall be submitted to the *building official* where portions of historic *buildings* to remain do not comply with the requirements of this code, and compliance with the requirements of this code would threaten, degrade, or destroy the historic building features, form, materials, or functions that are historic and character-defining.

AJ110.4.1 Qualifications. The Historic Building Report shall be prepared and signed by either a historic preservation professional or a registered design professional and shall be signed by the owner of the historic *building*.

AJ110.4.2 Minimum requirements. The Historic Building Report shall include the following information:

1. Documentation of the historic *building* listing or designation.
2. A narrative identifying each specific provision of this code that would threaten, degrade, or destroy the historic building features, form, materials, or functions that are historic and character-defining.
3. A narrative and documentation, including but not limited to drawings or photographic documentation where applicable, identifying and describing each such historic building feature, form, material, or function.
4. A narrative identifying each aspect of the *repair*, *alteration*, addition, change of occupancy or relocation intended to demonstrate maximum feasible compliance with the requirements of this code and to provide reasonable levels of life-safety compliance through alternative methods as needed.
5. Certification by a registered design professional that the portions of the historic *building* to remain, together with any proposed alternative methods, do not constitute a distinct life safety hazard and are not otherwise dangerous to human life or the public welfare.

AJ110.4.3 Review. The Historic Building Report shall be reviewed either by the local historic preservation authority having jurisdiction within the *Agency* or by the State Historic Preservation Office having jurisdiction prior to submittal to the *building official* to verify that compliance with the specific provisions of this code identified in the report would threaten, degrade, or destroy the historic building features, form, materials, or functions that are historic and character-defining identified in the report, and to verify the *repair*, *alteration*, addition, relocation, or change of occupancy would not threaten, degrade, or destroy such features, form, materials, or functions.

APPENDIX AM
HOME DAY CARE R-3 OCCUPANCY

SECTION AM101

GENERAL

Appendix Section AM101.1 General is amended by adding the following sentence to the end of the section:

Floor levels two or more stories above the ground-level story shall not be used for child care.

SECTION AM103

MEANS OF EGRESS

Section AM103.1.4 Child care exits is added as follows:

AM103.1.4 Child care exits. A floor level used for child care that is no more than four feet measured vertically from adjacent ground level, may be considered a complying ground-level *story*.

All rooms used for child care shall have access to two exits. The primary exit access shall be a door, stairway, or ramp providing a means of unobstructed travel to the outside of the *dwelling unit* at finished ground level. The secondary exit access shall be one of the following:

1. A door, *stairway*, or ramp providing a means of unobstructed travel to the outside of the *dwelling unit* at finished ground level that is independent of and remote from the primary exit access.
2. An emergency escape and rescue opening conforming to the provisions of Section R310.2.

There shall be no dead-end corridors exceeding 20 feet (6096 mm) in length.

In large *Family child care homes* (FCCH), when the first level above the ground-level *story* is used for child care, the primary exit access shall be one of the following:

1. A door leading directly to the outside with access to finish ground level,
2. A door leading directly to an outside stairway going to finished ground level or,
3. An interior stairway leading directly to the outside with access to finished ground level. The interior stairway shall be separated from other stories by not less than ½-inch gypsum board or equivalent. The under-stair surface, including any intermediate landings shall be protected with ½-inch gypsum board or equivalent.

Section AM103.5 Large Family Child Care Homes protection of vertical openings is added as follows.

AM103.5 Large Family Child Care Home protection of vertical openings. For large *Family child care homes*, a door equipped with a self-closing or automatic-closing device shall be provided between the first story and the *basement* at the top of all stairways. Where the story above the level of exit discharge is used for sleeping purposes, there shall be a door equipped with a self-closing or automatic-closing device at the top or the bottom of each *stairway*. In all locations these doors shall be a solid wood door not less than 1-3/8 inches (35 mm) in thickness, a solid or honeycomb-core steel door not less than 1-3/8 inches (35 mm) thick, or a 20-minute labeled fire door.

END OF 2022 DENVER RESIDENTIAL CODE

2022
DENVER MECHANICAL CODE

COMPRISED OF
2022 DENVER AMENDMENTS

TO THE 2021 EDITION OF THE

INTERNATIONAL MECHANICAL CODE (IMC) AND APPENDICES

AS PUBLISHED BY
INTERNATIONAL CODE COUNCIL (ICC)

The 2021 International Mechanical Code and all errata to that code is hereby adopted and incorporated by reference except for the amendments to each chapter and appendix of the 2021 International Mechanical Code specified below.

CHAPTER 1
ADMINISTRATION

SECTION 101
GENERAL

Section 101.1 Title is deleted in its entirety and replaced as follow:

101.1 Title. These regulations shall be known as the Denver Mechanical Code (DMC), hereinafter referred to as "this code."

Section 102.8.3 Renaming of certain referenced codes is added to read as follows:

102.8.3 Renaming of certain referenced codes. Any references to the International Building Code, International Energy Conservation Code, International Fire Code, International Fuel Gas Code, International Residential Code, International Plumbing Code, International Existing Building Code, and NFPA 70 means the Denver Commercial Building Code, Denver Energy Code, Denver Fire Code, Denver Fuel Gas Code, Denver Residential, Denver Plumbing Code, Denver Existing Building Code, and the Electrical Code of the City and County of Denver, respectively.

Sections 103 through 106, 108, 109 and 113 through 115 are replaced in entirety as follows:

Article 1, Section 1 of the *2022 Denver Building Code* shall govern.

CHAPTER 3
GENERAL REGULATIONS

SECTION 303
EQUIPMENT AND APPLIANCE LOCATION

Section 303.8 Elevator Shafts is amended by adding an exception:

Exception: Mechanical systems providing independent ventilation, heating, or cooling for elevator equipment complying with the following items shall be allowed in elevator shafts and elevator equipment rooms.

1. Mechanical systems shall not be located directly above any elevator equipment and shall not encroach on required clearances in the hoistway, machinery space, machine room, control space, or control room.

2. If mechanical systems are located in an alcove or niche within in the elevator shaft, then the opening into the vertical shaft must be covered with steel mesh per ASME A17.1 Section 2.1.6.2(d). The alcove or niche shall be constructed to maintain the fire rating of the elevator shaft as required per chapter 7 of the Denver Commercial Building Code.
3. Condensate must discharge to the outside of the elevator shaft or elevator equipment room to an *approved* place of disposal. Condensate lines shall not be located directly above elevator equipment and shall not encroach on required clearances in the hoistway, machinery space, machine room, control space, or control room.
4. Access from outside the elevator shaft to mechanical systems located in an alcove or niche within the elevator shaft is permitted through a fire rated access opening not less than 30 inches high and 22 inches wide and large enough to remove the largest appliance.

SECTION 309
TEMPERATURE CONTROL

Section 309.2 Outside air is added as follows:

309.2 Outside air. For spaces that require space heating systems per section 309.1, the mechanical system delivering outside air to the space shall be capable of a discharge temperature of not less than 60 deg F during heating mode.

CHAPTER 4
VENTILATION

SECTION 401
GENERAL
Section 401.4 Item #3 is modified as follows:

3. Intake openings shall be located not less than 3 feet (914 mm) below contaminant sources where such sources are located within 10 feet (3048 mm) of the opening. Separation is not required between intake air openings and living space exhaust air openings of an individual *dwelling unit* or sleeping unit where factory-built intake/exhaust combination termination fitting is used to separate the air streams in accordance with the fan manufacturer's instructions.

SECTION 402
NATURAL VENTILATION

Section 402.2 Ventilation area required is amended by adding the following to the end of the section:

If windows used for natural ventilation are required to have window fall prevention devices in accordance with Section 1015.8 of the *Denver Commercial Building Code*, only the restricted opening area can be used in the calculation for natural ventilation. The open area of each window and door used for natural ventilation shall be shown on the drawings.

Section 402.5 Distance to opening is added as follows:

402.5. Distance to opening. Excluding residential occupancies, naturally ventilated spaces shall be permanently open to and within 25 feet (7620 mm) of operable openings to the exterior.

SECTION 403
MECHANICAL VENTILATION

Section 403.1 Ventilation system is replaced as follows:

403.1 Ventilation system. Mechanical ventilation shall be provided by a method of supply air and return or exhaust air. The amount of supply air shall be approximately equal to the amount of return and exhaust air. The system shall not be prohibited from producing negative or positive pressure. The system to convey ventilation air shall be designed and installed in accordance with Chapter 6.

Section 403.2.1 Item 1 is replaced as follows:

1. Ventilation shall not be recirculated from one *dwelling unit* to another. Ventilation air shall not be recirculated between residential and nonresidential occupancies. Ventilation air shall not be recirculated between nonresidential occupancies of dissimilar use.

Section 403.3 Outdoor air and local exhaust airflow rates is replaced as follows:

403.3 Outdoor air and local exhaust airflow rates. Group R-2, R-3, and R-4 occupancies shall be provided with outdoor air and local exhaust in accordance with Section 403.3.2. Other buildings intended to be occupied shall be provided with outdoor air and local exhaust in accordance with Section 403.3.1.

Section 403.3.1 Other buildings intended to be occupied is replaced as follows:

403.3.1 Other buildings intended to be occupied. The design of local exhaust systems and ventilation systems for outdoor air for occupancies other than Group R-2, R-3, and R-4 shall comply with Sections 403.3.1.1 through 403.3.1.4.

Section 403.3.1.1 Outdoor air flow rate is amended by adding the following sentence:

The calculations required by this section shall be provided by the design professional. It is recommended to use the ASHRAE 62.1-2019 spreadsheet.

Table 403.3.1.1 Minimum ventilation rates is amended by adding the following to the end of the table:

OCCUPANCY CLASSIFICATION	OCCUPANT DENSITY #/1000 FT^2	PEOPLE OUTDOOR AIRFLOW RATE IN BREATHING ZONE, R_P CFM/PERSON	AREA OUTDOOR AIRFLOW RATE IN BREATHING ZONE R_a CFM/FT^2	EXHAUST AIRFLOW RATE CFM/FT^2
Workrooms Service sinks	--	--	--	1.0

Section 403.3.2 Group R-2, R-3 and R-4 occupancies, three stories and less is replaced as follows:

403.3.2 Group R-2, R-3, and R-4 occupancies. The design of local exhaust systems and ventilation systems for outdoor air in Group R-2, R-3, and R-4 occupancies shall comply with Sections 403.3.2.1 through 403.3.2.5.

Section 403.3.2.1 Outdoor air for dwelling units is replaced as follows:

403.3.2.1 Outdoor air for dwelling units. An outdoor air ventilation system shall be installed for each *dwelling unit.* Local supply systems, including outdoor air ducts connected to the return side of an air handler, are permitted to serve as such a system. The outdoor air ventilation system shall be designed to provide the required rate of outdoor air continuously during the period that the building is occupied. The minimum continuous outdoor airflow rate shall be determined in accordance with Equation 4-9.

$Q_{OA} = 0.03A_{floor} + 7.5(N_{br} + 1)$ **(Equation 4-9)**

where:

Q_{OA} = outdoor airflow rate, cfm

A_{floor} = conditioned floor area, ft2

N_{br} = number of bedrooms; not to be less than one

Exceptions:

1. The outdoor air ventilation system is not required to operate continuously where the system has controls that enable operation for not less than 1 hour of each 4-hour period. The average outdoor airflow rate over the 4-hour period shall be not less than that prescribed by Equation 4-9.
2. The minimum mechanical ventilation rate determined in accordance with Equation 4-9 shall be reduced by 30 percent provided that the following condition applies:
   - 2.1. A ducted system supplies ventilation air directly to each bedroom and to one or more of the following rooms:
     - 2.1.1. Living room.
     - 2.1.2. Dining room.
     - 2.1.3. Kitchen.

SECTION 404
ENCLOSED PARKING GARAGES

Section 404.1.1 CO detector limits is added as follows:

404.1.1 CO detector limits. Where the system is arranged to operate automatically upon detection of a concentration of carbon monoxide, the limit shall be set at 25 parts per million (ppm).

Section 404.1.2 Nitrogen dioxide detector limits is added as follows:

404.1.2 Nitrogen dioxide detector limits. Where the system is arranged to operate automatically upon detection of a concentration of nitrogen dioxide, the limit shall be set at 1 part per million (ppm).

CHAPTER 5
EXHAUST SYSTEMS

SECTION 501
GENERAL

Section 501.2 Independent system required is replaced as follows:

501.2 Independent system required. Single or combined mechanical exhaust systems for environmental air shall be independent of all other exhaust systems. Dryer, and hazardous exhaust shall be independent of all other systems. Type I exhaust systems shall be independent of all other exhaust systems except as provided in Section 506.3.5. Single or combined Type II exhaust systems for food-processing operations shall be independent of all other exhaust systems. Kitchen exhaust systems shall be constructed in accordance with Section 505 for domestic cooking operations and Sections 506 through 509 for commercial cooking operations.

Section 501.3.1 Location of exhaust outlets is amended by replacing item 3 as follows:

3. For all environmental air exhaust: 3 feet (914 mm) from property lines; 3 feet (914 mm) from operable openings into buildings for all occupancies other than Group U; and 10 feet (3048 mm) from mechanical air intakes. Such exhaust shall not be considered hazardous or noxious. Separation is not required between intake air openings and living space exhaust air openings of an individual *dwelling unit* or *sleeping unit* where a factory-built intake/exhaust combination termination fitting is used to separate the air streams in accordance with the fan manufacturer's instructions.

SECTION 505
DOMESTIC KITCHEN EXHAUST EQUIPMENT

Section 505.3 Exhaust Ducts is replaced as follows, Exceptions 1, 2 and all subsections of 2 to remain:

Domestic cooking exhaust *equipment* shall discharge to the outdoors through sheet metal ducts constructed of galvanized steel, stainless steel, aluminum, or copper. Such ducts shall have smooth inner walls, shall be airtight, shall be equipped with a backdraft damper, and shall be independent of all other exhaust systems. Installations in Group I-1 and I-2 Occupancies shall be in accordance with the *Denver Commercial Building Code* and Section 904.13 of the Denver *Fire Code*.

Section 505.4 Makeup air required is amended by adding an exception:

Exception: Make-up air shall not be required when the design professional can demonstrate that the exhaust system will not adversely affect the operation or exhaust of combustion gases of any equipment or appliance within the *dwelling unit*. This exception does not alleviate the requirement for pressure equalization per Section 501.4.

Section 505.6 Other than Group R is replaced as follows:

505.6. Other than individual dwelling units. In other than individual *dwelling units*, where domestic cooktops, ranges, and open-top broilers are used for domestic purposes, a residential hood that contains a listed UL300A fire suppression system shall be provided. The fire suppression system shall be connected to the fire alarm system in buildings that have a fire alarm.

Section 505.7 Residential cooking appliances vented by exhaust hoods is added as follows:

Section 505.7 Residential cooking appliances vented by exhaust hoods. Where residential cooking appliances are gas-fired, a fan powered exhaust system shall be installed and must be vented to the outside. System shall be sized and installed in accordance with manufacturer's instructions.

SECTION 506
COMMERCIAL KITCHEN HOOD VENTILATION SYSTEM DUCTS AND EXHAUST EQUIPMENT

Section 506.3.11 is amended by adding exception 2:

Exception 2. A duct enclosure shall not be required for a grease duct that penetrates only an exterior wall and all the following are true:

1. The grease duct does not penetrate, or pass-through openings, gaps, or holes in rated or non-rated interior walls or shafts.
2. The grease duct does not leave the tenant boundary.
3. The grease duct shall be permitted to penetrate a non-fire-resistance-rated ceiling.

Section 506.3.13.2 Termination through an exterior wall is amended by adding the following sentence to the end of the section:

Exhaust outlets shall be permitted to terminate through exterior walls when a pollution-control unit is used. The pollution control unit shall have 95 percent efficiency at the particle size of .3 microns in accordance with ASHRAE Standard 52.2 or equivalent.

Section 506.5.2 Pollution-control units is amended by adding the following:

16. Where PCU's are installed above the ceiling and/or in return air plenums the manufacturer's recommended service clearances and clearances from combustibles shall be maintained. The unit shall be installed in accordance with the manufacturer's recommendations and limitations. PCUs installed above a ceiling shall be installed in a rated enclosure unless the associated grease duct is not required by 506.3.11 to be enclosed. Where an enclosure is required, the PCU enclosure shall be of noncombustible construction or gypsum wallboard attached to noncombustible structures forming the enclosure. A clearance of not less than 6 inches (152 mm) shall be maintained between the enclosure and the PCU. (Section 506.3.11.1)
17. Ductwork downstream of a PCU is considered grease duct and shall comply with code sections pertaining to grease duct.
18. The fire protection system installed within the Pollution Control Unit shall provide protection of the component sections of the equipment, and ductwork downstream of the equipment. (NFPA 96 2017 9.3.3).
19. Equipment commissioning reports shall be provided for the PCU.
20. Where a PCU enclosure is required, the construction documents shall include details showing:
    - 20.1. The construction of the pollution control unit enclosure and the UL designation number of the construction.
    - 20.2. Clearances between the PCU and the enclosure.

20.3. Service access clearances.

20.4. Duct wrap penetration and sealing at the PCU enclosure.

20.5. Support and anchoring methods for the enclosure and the PCU.

20.6. Access fire door size, type, rating, location, and UL listing.

20.7. Where the PCU manufacturer requires a service platform or a service platform is provided, provide stamped calculations and details of the platform construction including handrails and how the platform is anchored.

SECTION 507
COMMERCIAL KITCHEN HOODS

Section 507.1 General is amended by deleting Exception 4.

SECTION 513
SMOKE CONTROL SYSTEMS

Section 513.2 General design requirements is amended by adding the following sentence at the end of the section:

All sections shall be replaced with Section 909 of the *Denver Fire Code*.

CHAPTER 6
DUCT SYSTEMS

[B] SECTION 607
DUCT AND TRANSFER OPENINGS

Section 607.5.5 Shaft enclosures is amended by deleting Exception 1.3 and Exception 4.

Section 607.6.2.1.2 Static systems is amended by deleting Exceptions 2 and 3 and replacing Exception 1 as follows:

Exceptions:

1. When the fans associated with heating, ventilation, air-conditioning, and exhaust systems are interlocked to shut down during a fire, static ceiling radiation dampers may be used within the associated systems.

CHAPTER 9
SPECIFIC APPLIANCES, FIREPLACES AND SOLID FUEL-BURNING EQUIPMENT

SECTION 901
GENERAL

Section 901.5 EPA certification for pellet fuel burning appliances and wood-burning fireplace stoves is added as follows:

901.5 Pellet or wood-burning appliances and stoves or heaters. *Pellet fuel-burning appliances* and wood burning *fireplace stoves* and room heaters shall be listed by an *approved* testing agency and shall meet Step 2, 2020 standards in the EPA Certified Wood Heater Database published by the Environmental Protection Agency and approved by Colorado Department of Public Health & Environment. Wood-burning appliances not on the EPA *approved* list cannot be installed unless converted to a gas log fireplace in accordance with the requirements of Section 602 of the *Denver Fuel Gas Code.*

SECTION 910
FLOOR FURNACES

Section 910 Floor furnaces is deleted in its entirety.

SECTION 911
DUCT FURNACES

Section 911.1 General is replaced as follows:

911.1 General. Duct furnaces shall be installed in accordance with the manufacturer's instructions and shall be installed in the same duct system as the fan. Electric duct furnaces shall comply with UL 1996. The fan shall provide at least the minimum airflow required by the furnace manufacturer.

CHAPTER 11
REFRIGERATION

SECTION 1101
GENERAL

Section 1101.1.1 is modified as follows:

1101.1.1 Refrigerants other than ammonia. Refrigerant piping design and installation for systems containing a refrigerant than ammonia, including pressure vessels and pressure relief devices, shall comply with this chapter and ASHRAE 15~~.~~, as specified below.

1. Group A1 refrigerants shall comply with this chapter, ASHRAE 15 as referenced in this chapter, *Denver Commercial Building Code* and the *Denver Fire Code*. Refrigeration systems containing carbon dioxide as the refrigerant shall also comply with IIAR CO2.

~~1.~~2. Group A2L, B2L, A2, B2, A3, and B3 refrigerants shall comply with ASHRAE 15 Sections 3 through 13, *Denver Commercial Building Code* and the *Denver Fire Code*, and shall not be required to comply with this chapter.

SECTION 1109
REFRIGERANT PIPE INSTALLATION

Section 1109.9 Termination of relief devices is added as follows:

1109.9 Termination of relief devices. Pressure-relief devices and fusible plugs ~~on any system containing a group A3 or B3 refrigerant; on any system containing more than 6.6 pounds (3.0 kg) of a group A2, B1, or B2 refrigerant; and~~ on any system containing more than 110 pounds (50 kg) of a group A1 refrigerant shall discharge to the atmosphere at a location not less than 15 feet (4572 mm) above adjoining ground level and not less than 20 feet (6096 mm) from any window, ventilation opening, or exit in any building. The discharge shall terminate in a manner that will prevent the discharged refrigerant from being sprayed directly on personnel in the vicinity and foreign material or debris from entering the discharge piping. Discharge piping connected to the discharge side of a fusible plug or rupture member shall have provisions to prevent plugging the pipe in the event the fusible plug or rupture member functions.

CHAPTER 15
REFERENCED STANDARDS

ASHRAE

ASHRAE 15-2019 and ASHRAE 34-2019 are replaced as follows:

15-2022	Safety Standard for Refrigeration Systems including Addenda a through ~~w~~ab. 1101.1.1, 1106.4.2
34-2022	Designation and Safety Classification of Refrigerants, including Addenda a through ~~ah~~n. 202, 1103.1

UL

UL 484—2014 Standard for Room Air Conditioners is modified as follows:

UL 484—2014 Standard for Room Air Conditioners—with Revisions through May 2019

UL Standard UL/CSA 60335.2.40—2017 Household and Similar Electrical Appliances—Safety-- Part 2-40: Particular Requirements for Electrical Heat Pumps, Air-Conditioners and Dehumidifiers is replaced as follows:

UL Standard UL/CSA 60335-2-40—~~2019~~ 2022 Standard for Household and Similar Electrical Appliances–Safety–Part 2-40: Particular Requirements for Electric Heat Pumps, Air-Conditioners and Dehumidifiers.

908.1, 916.1, 918.1, 918.2, Table 1101.2

UL Standard UL/CSA 60335-2-89—2017 Household and Similar Electrical Appliances—Safety-- Part 2-89: Particular Requirements for Commercial Refrigerating Appliances with an Incorporated or Remote Refrigerant Unit or Compressor is replaced as follows:

UL Standard UL/CSA 60335-2-89—~~2017~~ 2021 Household and Similar Electrical Appliances—Safety--Part 2-89: Particular Requirements for Commercial Refrigerating Appliances with an Incorporated or Remote Refrigerant Unit or Compressor

Table 1101.2

MECHANICAL CODE APPENDICES
STATUS OF ADOPTION FOR APPENDICES

Appendices are Adopted or Not Adopted as part of this Code as noted in Appendix Adoption Table 1. Provisions in Appendices that are Added, Adopted, or Adopted as Amended carry the full weight and mandatory enforceability of the Code.

MECHANICAL CODE APPENDIX ADOPTION TABLE 1

APPENDIX	TITLE	STATUS
A	Chimney Connector Pass-Throughs	Adopted
B	Recommended Permit Fee Schedule	Not Adopted
C	Board of Appeals	Not Adopted

END OF 2022 DENVER MECHANICAL CODE

2022
DENVER PLUMBING CODE

COMPRISED OF
2022 DENVER AMENDMENTS

TO THE 2021 EDITION OF THE

INTERNATIONAL PLUMBING CODE (IPC) AND APPENDICES

AS PUBLISHED BY THE INTERNATIONAL CODE COUNCIL (ICC)

The content of the sections in this Code that begin with a letter or letters designations are maintained by other City or State entities.

[DOTI]	**Denotes Department of Transportation and Infrastructure**
[EB]	**Existing Buildings**
[CC]	**City Council**
[EH]	**Environmental Health**
[CPB]	**Colorado Plumbing Board**
[DW]	**Denver Water**
[FCWA]	**Federal Clean Water Act**

The 2021 International Plumbing Code and all errata to that code is hereby adopted and incorporated by reference except for the amendments to each chapter and appendix of the 2021 International Plumbing Code specified below.

CHAPTER 1
ADMINISTRATION

SECTION 101
GENERAL

Section 101.1 Title is deleted in its entirety and replaced as follows:

101.1 Title. These regulations shall be known as the Denver Plumbing Code (DPC), hereinafter referred to as "this code."

Section 102.8.3 Renaming of certain referenced codes is added to read as follows:

102.8.3 Renaming of certain referenced codes. Any references to the International Building Code, International Energy Conservation Code, International Fire Code, International Fuel Gas Code, International Residential Code, International Mechanical Code, International Existing Building Code, and NFPA 70 means the Denver Commercial Building Code, Denver Energy Code, Denver Fire Code, Denver Fuel Gas Code, Denver Residential Code, Denver Mechanical Code, Denver Existing Building Code, and the Electrical Code of the City and County of Denver, respectively.

Sections 103 through 110, and 113 through 116 are replaced in their entirety as follows:

Article 1, Section 1 of the *2022 Denver Building Code* shall govern.

CHAPTER 2
DEFINITIONS

SECTION 202
GENERAL DEFINITIONS

Section 202 General definitions is amended by adding the following definition:

SERVICE SINK: A sink or receptor intended for custodial use that is capable of being used to fill and empty a janitor's bucket. Included are mop sinks, laundry sinks, utility sinks and similar fixtures but not a kitchen sink or lavatory.

CHAPTER 3
GENERAL REGULATIONS

SECTION 301
GENERAL

[EB] Section 301.8 Existing buildings is added as follows:

301.8 Existing buildings. Plumbing fixtures in existing *buildings* may have their use continued if such use was legal at the time of enforcement of the Plumbing Code in force at the time of construction and such use is not detrimental to the health or safety requirements of current occupancy or use.

Any change in the use or occupancy of any existing building or structure shall comply with the provisions of this code. Any deviations may be *approved* by the *building official* as allowed through processes found in Article 1, Section 1 of the Denver Building Code.

SECTION 306
TRENCHING, EXCAVATION AND BACKFILL

[DOTI] Section 306.2.4 Trench safety is added as follows:

306.2.4 Trench safety. All excavations shall follow guidelines as required by OSHA.

CHAPTER 4
FIXTURE, FAUCETS AND FIXTURE FITTINGS

SECTION 401
GENERAL

[CC] Section 401.3.1 Rain sensing is added as follows:

401.3.1 Rain sensing. An *approved* rain sensing system shall be installed on all new automatic lawn sprinkler systems. Said rain sensing system shall be capable of turning the lawn sprinkler system off in the event adequate rain has fallen.

[CC] Section 401.3.2 Metering is added as follows:

401.3.2 Metering. Each individual *dwelling unit* shall be metered in such a way that all water used by a *dwelling unit* can be recorded and billed. The maintenance and repair of meters shall be the responsibility of the owner of the metered property.

Exception:

Where individual *dwelling units* are served by a domestic central water heating system.

SECTION 403
MINIMUM PLUMBING FACILITIES

Section 403.1.1 Fixture calculations is amended by replacing exception 2 and deleting exception 3:

Exceptions:

2. Calculations of fixtures provided in toilet and bathing rooms identified as all-gender shall be permitted to sum fractional numbers for each sex and then round up to the next whole number. Fixtures shall contribute equally to the number of male and female fixtures required. For occupancies where the required number of female fixtures is more than the required number of male fixtures, the additional fixtures are permitted to be provided in all-gender facilities.

Section 403.1.2 Single-user toilet facility and bathing room fixtures is replaced in its entirety as follows:

403.1.2 Toilet and bathing room fixture designation. Toilet and bathing fixtures shall be located in single-user or multi-user toilet and bathing rooms and shall be identified for use by sex or gender in accordance with Section 2902.1.2.1 and Section 2902.1.2.2 of the *Denver Commercial Building Code*.

403.1.2.1 Single-user toilet and bathing rooms. A single-user toilet and bathing room shall contain not more than one water closet, one bathtub and one shower. Plumbing fixtures provided in single-user toilet and bathing rooms shall contribute toward the total number of required plumbing fixtures as calculated per Section 2902.1.1 Exception 2 of the *Denver Commercial Building Code*. Single-user toilet and bathing rooms, including family or assisted-use toilet and bathing rooms shall be identified for use by all genders. Toilet fixtures shall not be in separate compartments.

Exception: In addition to a single water closet, one child-height water closet and one urinal shall be permitted to be located in a single-user toilet or bathing room. Not more than one water closet provided for each single-user toilet or bathing room shall contribute toward the total number of required plumbing fixtures.

403.1.2.2 Multi-user toilet and bathing rooms. Multi-user toilet and bathing rooms with not less than two water closet compartments, or one water closet compartment and one urinal, or two bathing fixtures shall be provided as separate male and female facilities. Plumbing fixtures provided in multi-user toilet and bathing rooms shall contribute toward the total number of required plumbing fixtures for the sex to which they are designated.

Exception: Multi-user toilet rooms complying with Section 2902.7 of the *Denver Commercial Building Code*. shall be permitted to be identified for use by all genders. Water closets and lavatories provided in multi-user toilet rooms identified for use by all genders shall contribute toward the total number of required plumbing fixtures as calculated per Section 2902.1.1 Exception 2. Where both separate and all-gender facilities are provided, separate independent multi-user male and female facilities shall be provided.

Section 403.1.3 Lavatory distribution is replaced as follows:

403.1.3 Lavatory Distribution. Where two or more toilet rooms are provided, the required number of lavatories shall be distributed proportionally to the required number of water closets. The required lavatories shall be permitted to be located within water closet compartments provided not less than the larger of one-half of the required lavatories or two lavatories shall be located outside of the water closet compartments.

Section 403.2 Separate facilities and its exception is replaced in its entirety as follows:

403.2 Minimum number facilities. Where plumbing fixtures are required, a minimum of two facilities shall be provided.

Exceptions: The minimum number of toilet facilities shall not be required for the following:

1. *Dwelling units* and *sleeping units*.
2. Structures or tenant spaces with a total occupant load, including both employees and customers, of 15 or fewer.
3. Mercantile occupancies in which the maximum occupant load is 100 or fewer.
4. Business occupancies in which the maximum occupant load is 25 or fewer.
5. Occupancies in which all-gender multi-user toilet rooms complying with Section 2902.8 of the *Denver Commercial Building Code* are provided.

Section 403.2.1 Family or assisted-use toilet facilities serving as separate facilities is deleted entirely.

[EH] Sections 403.3.2 "Prohibited toilet room location" shall be amended by adding the following to the end of the section:

Access to toilet rooms shall not be through food preparation areas, food storage areas, or ware washing or utensil storage areas, except for toilet rooms provided exclusively for the use of employees who primarily work in the food preparation area.

Section 403.3.6 Door locking is replaced in its entirety as follows:

403.3.6 Door locking. Door locking of toilet rooms, bathing rooms, and toilet compartments shall comply with this section.

403.3.6.1 Multi-user toilet and bathing rooms. Where provided, an egress door for the room shall not be lockable from the inside of the room.

403.3.6.2 Single-user toilet and bathing rooms. The egress door for the room shall be lockable from the inside of the room for privacy. The privacy lock shall be in accordance with Sections 1010.2.2 and 1010.2.3 of the *Denver Commercial Building Code*.

Exceptions:

1. Privacy locking shall not be required in *sleeping units* or *dwelling units*.
2. Where *approved* in Group I occupancies, toilet room privacy is not required where care recipients or detainees require observation for clinical or security reasons.

403.3.6.3 All-gender multi-user toilet rooms toilet compartment doors. Toilet compartment doors in all-gender multi-user toilet rooms shall have a privacy lock that has an indicator which notifies occupants on the exterior side of the door when the door is secured from the inside of the compartment.

Section 403.4. Signage is replaced as follows (subsection remains unchanged):

403.4 Signage. Required public facilities shall be provided with signs that designate the sex or gender as required by Section 2902.2 of the *Denver Commercial Building Code*. Signs shall be readily visible and located near the entrance to each toilet facility or bathing room. Signs for accessible toilet and bathing room facilities shall comply with Section 1112 of the *Denver Commercial Building Code*.

[EH] Section 403.6 Service sink location is amended by adding the following to the end of the section:

Service sinks are required on each floor where toilet facilities are provided in the following locations:

1. In food service facilities and occupancies,
2. In Group R occupancies that have food, drink, or ice for consumption or handling.

Section 403.7 All-gender multi-user toilet rooms and its subsections are added:

403.7 All-gender multi-user toilet rooms. Where all-gender multi-user toilet rooms are provided, they shall be in accordance with this Section.

403.7.1 Minimum number of fixtures. All-gender multi-user toilet rooms shall contain not less than six toilet compartments and three lavatories.

Exception: Where a single-user toilet room is clustered at a single location with an all-gender multi-user toilet room, the all-gender multi-user toilet room shall be permitted to contain not less than three toilet compartments and two lavatories.

403.7.2 Clearance. Toilet rooms shall be provided with a minimum clearance of not less than 60 inches (1524 mm) between all opposing toilet compartments, walls, and lavatories.

Exception: Circulation areas serving not more than one plumbing fixture.

403.7.3 Toilet compartments. Water closets shall each be provided in individual compartments. Compartments shall be permitted to include walls, partitions and doors and shall begin at the floor and extend to the finished ceiling, have no sightlines when the door is in the closed position and have a lockable door in accordance with Section 2902.3.6.3 of the *Denver Commercial Building Code*. A urinal shall be permitted only within a water closet compartment; such urinal shall not contribute towards the total number of required *plumbing fixtures*.

Exceptions:

1. Compartment door undercuts shall be permitted to be not more than 0.5 inches. (13 mm).
2. Air transfer grills at the entrance side of a compartment shall be allowed where they are provided at a height not less than 80 inches (2 133.6 mm).
3. Partial-height toilet compartments are permitted where they begin at a height not more than 4.5 inches (114.3 mm) and extend to a height not less than 96 inches (2 438.4 mm) above the finished floor surface.

[EH] Section 403.8 Toilet room accessories is added as follows:

[EH] 403.8 Toilet room accessories. A minimum of one hand-drying facility shall be provided in each toilet room where lavatories are provided.

Section 403.9 Drive-in facilities is added as follows:

403.9 Drive-in facilities. In addition to plumbing facilities otherwise required by Section 2902.1 of the *Denver Commercial Building Code*, public toilet facilities shall be provided to serve an occupant load equal to twice the number of parking stalls provided at drive-in restaurants and drive-in movie theaters.

SECTION 416
FOOD WASTE DISPOSER UNITS

Section 416.2 Domestic food waste disposer outlets is replaced as follows:

416.2 Domestic food waste disposer outlets. Domestic food waste outlets may be 1 ½ inch (38.1 mm) but shall be connected to a *drain* of at least 2 inches (50.8 mm) in diameter.

Section 416.3 Commercial food waste disposer waste outlets is replaced as follows:

416.3 Commercial food waste disposer waste outlets. Commercial food waste disposers shall be connected to a *drain* not less than 2 inches (50.8 mm) in diameter. Commercial food waste disposers shall be connected and trapped separately from any other fixtures or sink compartments.

[DOTI] Section 416.3.1 Discharge into grease interceptor is added as follows:

416.3.1 Discharge into grease interceptor. All food waste disposals in commercial kitchens shall be connected to and discharge into the *grease interceptor*.

Exception: Vegetable preparation area disposal may discharge to either sanitary or grease waste system.

CHAPTER 5
WATER HEATERS

SECTION 501
GENERAL

Section 501.2 Water heater as space heater is amended by adding the following to the end of the section:

When the heating system is inactive, one of the following methods of preventing stagnation of the water shall be employed:

1. The heating coil circulation pump shall be cycled on with valves open every 12 hours for a minimum of 5 minutes.

2. Other methods *approved* by the *building official* that prevent stagnation and submitted in accordance with Article 1, Section 104.10 of the Denver Building Code.

Section 501.7.1 ASME label required is added as follows:

501.7.1 ASME label required. When heated by steam or any other indirect means, hot water storage tanks shall comply with ASME construction requirements and bear the ASME label if nominal water containing capacity is 120 gal. or greater, or if either of the following limitations are exceeded: heat input of 200,000 Btu/hr; water temperature of 210° F.

SECTION 502
INSTALLATION

Section 502.2 Rooms used as a plenum is amended by adding an Exception:

Exception:

The water heater is a direct-vent appliance installed in accordance with the conditions of the listing and the manufacturer's instructions.

CHAPTER 6
WATER SUPPLY AND DISTRIBUTION

SECTION 603
WATER SERVICE

[DW] Section 603.1 Size of water service pipe is replaced as follows:

603.1 Size of water service pipe. The *water service pipe* shall be sized to supply water to the structure in the quantities and at the pressures required in this code. The minimum diameter of water service pipes shall be ¾ inch (19 mm). The service line shall remain the same size from tap through meter, then may be increased in size thereafter.

SECTION 604
DESIGN OF BUILDING WATER DISTRIBUTION SYSTEM

Table 604.4 Maximum flow rates and consumption for plumbing fixtures and fixture fittings is replaced as follows:

PLUMBING FIXTURE OR FIXTURE FITTIN	MAXIMUM FLOW RATE OR QUANTITY
Lavatory, private	1.5 gpm at 60 psi
Lavatory, public (metering)	0.25 gallon per metering cycle
Lavatory, public (other than metering)	0.5 gpm at 60 psi
Shower head	1.8 gpm at 80 psi
Sink faucet	1.5 gpm at 60 psi
Urinal	0.125 gallon per flushing cycle
Water closet (tank)	1.28 gallon per flushing cycle
Water closet (flushometer valve)	1.28 gallon per flushing cycle
Kitchen sink faucet	1.8 gpm (temporary override to 2.2 gpm permitted)

SECTION 608
PROTECTION OF POTABLE WATER SUPPLY

[DW, FCWA] Section 608.1.1 Backflow devices is added as follows:

608.1.1 Backflow devices. *Backflow* devices installed in water service lines shall be inspected and maintained per Denver Water/State of Colorado Clean Water Act, and the Colorado Cross-Connection Control Manual, most recent edition, as published by the Colorado Department of Public Health and Environment Water Quality Control Division.

Section 608.8 Valves and outlets prohibited below grade is amended by adding Exception 2 and numbering the existing Exception as Exception 1:

Exceptions:

2. Combination stop and waste valves may be installed underground if an *approved* means of removing wastewater from the seep hole is provided, such as a gravel bedding, etc.

Section 608.15.2.1 Relief port piping is amended by adding the following to the section as follows:

If this discharge is by means of a pump, the pump shall be sized to handle the maximum discharge of the device.

CHAPTER 7
SANITARY DRAINAGE

SECTION 703
BUILDING SEWER

[DOTI] Section 703.7 Slope of building sewer piping is added as follows:

703.7 Slope of building sewer piping. Building sewers shall be installed at uniform grade or slope. The minimum grade of building sewers shall be in accordance with Denver Wastewater Management Standards.

SECTION 708
CLEANOUTS

[DOTI] Section708.1.3 Building drain and building sewer junction is replaced in its entirety as follows:

708.1.3 Building drain and building sewer junction. There shall be a cleanout at the junction of the building sewer. An *approved* two-way cleanout shall be used and brought up to finished grade. Minimum size shall be 4" or as approved by Denver Wastewater Management.

[DOTI] Section 708.1.4 Changes of direction is replaced in its entirety as follows:

708.1.4 Changes of direction. Cleanouts shall be installed at each change of direction of the building drain or horizontal waste or soil lines greater than 135 degrees (2.36 rad.). Where more than one change of direction occurs in a run of piping, only one cleanout shall be required for each 40 feet (12 192 mm) of developed length of the drainage piping.

SECTION 712
SUMPS AND EJECTORS

Section 712.4 Sewage pumps and sewage ejectors is amended as follows:

712.4 Sewage pumps and sewage ejectors. In public use occupancies, dual (duplex) sewage ejectors shall be required and shall be arranged to function independently in case of mechanical failure. All dual ejectors shall be alarmed to provide visual and/or audible notification of failure.

Exception: A single ejector pump may be used in commercial applications when it is used for a single exam room or breakroom sink and associated dishwasher and/or disposer.

SECTION 717
RELINING BUILDING SEWERS AND BUILDING DRAINS

Section 717.4 Permitting is amended by adding the following sentence:

Prior to the commencement of the relining of existing building sewer piping, plans shall be submitted to Denver Wastewater Management for approval.

SECTION 718
REHABILITATION OF BUILDING SEWERS AND BUILDING DRAINS

Section 718.1 Cure-in-place is amended by adding the following sentence:

Prior to the commencement of the rehabilitation of existing building sewer piping, plans shall be submitted to Denver Wastewater Management for approval.

CHAPTER 8
INDIRECT/SPECIAL WASTE

SECTION 803
SPECIAL WASTES

[DW] Section 803.3 Cooling water is added as follows:

803.3 Cooling water. Domestic water used for cooling purposes shall be consumed or recycled and shall not be discharged to a storm drain, above-ground drainage, or below-ground drainage unless specifically approved by Denver Water.

Exception: Diesel driven fire pump.

CHAPTER 9
VENTS

SECTION 903
VENT TERMINALS

903.1.1 Roof extension unprotected is modified as follows:

903.1.1Roof extension unprotected. Open vent pipes that extend through a roof shall be terminated not less than 12 inches (305 mm) above the roof.

CHAPTER 10
TRAPS, INTERCEPTORS AND SEPARATORS

SECTION 1003
INTERCEPTORS AND SEPARATORS

[DOTI] Section 1003.2 Approval is replaced in its entirety as follows:

1003.2 Approval. The size, type, and location of each interceptor and of each separator shall be designed and installed in accordance with the manufacturers' instructions and the requirements of this section based on the anticipated conditions of use. Wastes that do not require treatment or separation shall not be discharged into any interceptor or separator. Prior to installation of any interceptor or separator and their associated piping, plans shall be submitted to Denver Wastewater Management for approval.

Section 1003.3 Grease interceptors and all its subsections are deleted and replaced as follows:

1003.3 Grease interceptors. *Grease interceptors* shall comply with the requirements of the Wastewater Management Division, the Department of Public Health & Environment, and this section.

1003.3.1 Grease interceptors and automatic grease removal devices required. A *grease interceptor* shall be required to receive the drainage from all fixtures, drains, and equipment located in commercial kitchen areas and warewashing areas.

Exceptions:

1. Bars and beverage stations that are not within the kitchen area.
2. Where approved in accordance with the procedures established by the Wastewater Management Division.

1003.3.2 Food waste disposers. Food waste disposers in commercial kitchens shall be routed through the *grease interceptor*. Exception: Food waste disposers dedicated to vegetable preparation, and where other means of disposal of meats, oil, and grease waste is provided.

1003.3.3 Grease interceptor capacity. *Grease interceptors* shall be sized in accordance with the procedures established by the Wastewater Management Division.

1003.3.4 Hydromechanical grease interceptors and automatic grease removal devices. Hydromechanical *grease interceptors* and *automatic grease removal devices* shall not be allowed, except as *approved* under the provisions of Section 104 of Article 1, Section 1 of the Denver Building Code, and in accordance with the procedures established by the Wastewater Management Division.

1003.3.5 Sewage ejectors. Sewage ejectors shall not be installed upstream of *grease interceptors*.

Section 1005 Abandoned interceptors is added as follows:

SECTION 1005
ABANDONED INTERCEPTORS

[DOTI] 1005.1 Abandoned food/oil grease interceptors and sand/oil interceptors. All food/oil/*grease interceptors* and sand/oil interceptors that are to be abandoned or by-passed, shall have all piping removed, the structure capped or plugged, and the lid broken as to make it unusable. It shall be pumped clean and filled with granular material to satisfy Denver Wastewater Management standards.

CHAPTER 11
STORM DRAINAGE

SECTION 1101
GENERAL

[DOTI] Section 1101.1 Scope is replaced in its entirety as follows:

1101.1 Scope. The provisions of this chapter shall govern the materials, design, construction, and installation of storm drainage. That portion of the storm drainage system from the building to the public storm sewer shall be in accordance with the procedures established by the Wastewater Management Division.

SECTION 1106
SIZE OF CONDUCTORS, LEADERS AND STORM DRAINS

Section 1106.1 General is replaced in its entirety as follows:

1106.1 General. The size of the vertical conductors and leaders, building storm sewers and any horizontal branches of such drains shall be based on 2.4-inch (61 mm) rainfall per hour per figure 1106.1(1).

Section 1106.2.2 Alternative storm drain sizing is added as follows:

1106.2.2 Alternative storm drain sizing. The size of the building *storm drain*, building storm *sewer* and their horizontal branches having a slope of one-half unit or less vertically in 12 units horizontally (4-percent slope) shall be based on the maximum projected roof area in accordance with Table 1106.2.2. The minimum slope of horizontal branches shall be one-eighth unit vertical in 12 units horizontal (1-percent slope) unless otherwise *approved* in accordance with Article I, Section 104.10 of the Denver Building Code.

Table 1106.2.2 Size of horizontal storm drainage piping is added as follows:

TABLE 1106.2.2
SIZE OF HORIZONTAL STORM DRAINAGE PIPING

SIZE OF HORIZONTAL PIPING (inches)	HORIZONTALLY PROJECTED ROOF AREA (square feet)					
	Rainfall rate (inches per hour)					
	1	2	3	4	5	6
$^1/_8$ unit vertical in 12 units horizontal (1-percent slope)						
3	3,288	1,644	1,096	822	657	548
4	7,520	3,760	2,506	1,800	1,504	1,253
5	13,360	6,680	4,453	3,340	2,672	2,227
6	21,400	10,700	7,133	5,350	4,280	3,566
8	46,000	23,000	15,330	11,500	9,200	7,600
10	82,800	41,400	27,600	20,700	16,580	13,800
12	133,200	66,600	44,400	33,300	26,650	22,200
15	218,000	109,000	72,800	59,500	47,600	39,650
$^1/_4$ unit vertical in 12 units horizontal (2-percent slope)						
3	4,640	2,320	1,546	1,160	928	773
4	10,600	5,300	3,533	2,650	2,120	1,766
5	18,880	9,440	6,293	4,720	3,776	3,146
6	30,200	15,100	10,066	7,550	6,040	5,033
8	65,200	32,600	21,733	16,300	13,040	10,866
10	116,800	58,400	38,950	29,200	23,350	19,450
12	188,000	94,000	62,600	47,000	37,600	31,350
15	336,000	168,000	112,000	84,000	67,250	56,000
$^1/_2$ unit vertical in 12 units horizontal (4-percent slope)						
3	6,576	3,288	2,295	1,644	1,310	1,096
4	15,040	7,520	5,010	3,760	3,010	2,500
5	26,720	13,360	8,900	6,680	5,320	4,450
6	42,800	21,400	13,700	10,700	8,580	7,140
8	92,000	46,000	30,650	23,000	18,400	15,320
10	171,600	85,800	55,200	41,400	33,150	27,600
12	266,400	133,200	88,800	66,600	53,200	44,400
15	476,000	238,000	158,800	119,000	95,300	79,250

For SI: 1 inch = 25.4 mm, 1 square foot = 0.0929 m^2.

Section 1106.3.1 Alternative vertical leader sizing is added as follows:

1106.3.1 Alternative vertical leader sizing. Vertical conductors and leaders shall be sized for the maximum projected roof area, in accordance with Tables 1106.3.1(1) and 1106.3.1(2)

Table 1106.3.1(1) and 1006.3.1(2) is added as follows:

TABLE 1106.3.1(1)
SIZE OF CIRCULAR VERTICAL CONDUCTORS AND LEADERS

DIAMETER OF LEADER (inches)[a]	HORIZONTALLY PROJECTED ROOF AREA (square feet)											
	Rainfall rate (inches per hour)											
	1	2	3	4	5	6	7	8	9	10	11	12
2	2,880	1,440	960	720	575	480	410	360	320	290	260	240
3	8,800	4,400	2,930	2,200	1,760	1,470	1,260	1,100	980	880	800	730
4	18,400	9,200	6,130	4,600	3,680	3,070	2,630	2,300	2,045	1,840	1,675	1,530
5	34,600	17,300	11,530	8,650	6,920	5,765	4,945	4,325	3,845	3,460	3,145	2,880
6	54,000	27,000	17,995	13,500	10,800	9,000	7,715	6,750	6,000	5,400	4,910	4,500
8	116,000	58,000	38,660	29,000	23,200	19,315	16,570	14,500	12,890	11,600	10,545	9,600

For SI: 1 inch = 25.4 mm, 1 square foot = 0.0929 m^2.

a. Sizes indicated are the diameter of circular piping. This table is applicable to piping of other shapes, provided the cross-sectional shape fully encloses a circle of the diameter indicated in this table. For rectangular leaders, see Table 1106.2(2). Interpolation is permitted for pipe sizes that fall between those listed in this table.

TABLE 1106.3.1(2)
SIZE OF RECTANGULAR VERTICAL CONDUCTORS AND LEADERS

DIMENSIONS OF COMMON LEADER SIZES width x length (inches)[a]	HORIZONTALLY PROJECTED ROOF AREA (square feet)											
	Rainfall rate (inches per hour)											
	1	2	3	4	5	6	7	8	9	10	11	12
$1^3/_4 \times 2^1/_2$	3,410	1,700	1,130	850	680	560	480	420	370	340	310	280
2×3	5,540	2,770	1,840	1,380	1,100	920	790	690	610	550	500	460
$2^3/_4 \times 4^1/_4$	12,830	6,410	4,270	3,200	2,560	2,130	1,830	1,600	1,420	1,280	1,160	1,060
3×4	13,210	6,600	4,400	3,300	2,640	2,200	1,880	1,650	1,460	1,320	1,200	1,100
$3^1/_2 \times 4$	15,900	7,950	5,300	3,970	3,180	2,650	2,270	1,980	1,760	1,590	1,440	1,320
$3^1/_2 \times 5$	21,310	10,650	7,100	5,320	4,260	3,550	3,040	2,660	2,360	2,130	1,930	1,770
$3^3/_4 \times 4^3/_4$	21,960	10,980	7,320	5,490	4,390	3,660	3,130	2,740	2,440	2,190	1,990	1,830
$3^3/_4 \times 5^1/_4$	25,520	12,760	8,500	6,380	5,100	4,250	3,640	3,190	2,830	2,550	2,320	2,120
$3^1/_2 \times 6$	27,790	13,890	9,260	6,940	5,550	4,630	3,970	3,470	3,080	2,770	2,520	2,310
4×6	32,980	16,490	10,990	8,240	6,590	5,490	4,710	4,120	3,660	3,290	2,990	2,740
$5^1/_2 \times 5^1/_2$	44,300	22,150	14,760	11,070	8,860	7,380	6,320	5,530	4,920	4,430	4,020	3,690
$7^1/_2 \times 7^1/_2$	100,500	50,250	33,500	25,120	20,100	16,750	14,350	12,560	11,160	10,050	9,130	8,370

a. Sizes indicated are nominal width × length of the opening for rectangular piping.

b. For shapes not included in this table, Equation 11-1 shall be used to determine the equivalent circular diameter, D_e, of rectangular piping for use in interpolation using the data from Table 1106.2(1).

$D_e = [\text{width} \times \text{length}]^{1/2}$ **(Equation 11-1)**

where:

D_e = equivalent circular diameter and D_e, width and length are in inches.

Section IPC 1106.5 Parapet wall scuppers is replaced in its entirety as follows:

1106.5 Parapet wall scuppers. Where scuppers are used for primary roof drainage or for secondary (emergency over-flow) roof drainage or both, the quantity, size, location, and inlet elevation of the scuppers shall be chosen to prevent the depth of ponding water on the roof from exceeding the maximum water depth that the roof was designed for as determined by Section 1611.1 of the *Denver Commercial Building Code*. Scuppers shall have an opening height of not less than 4 inches (102 mm), a width of not less than 4 inches (102 mm) and shall be sized in accordance with 1106.5.1 or 1106.5.2. The flow through the primary system shall not be considered when locating and sizing secondary scuppers.

1106.5.1 Equivalent circumference. The scupper width shall be equal to or greater than the strainer circumference of a roof drain sized for the same roof area.

1106.5.2 Francis formula. The scupper shall be sized by the Francis formula in accordance with Figure 1106.5.2

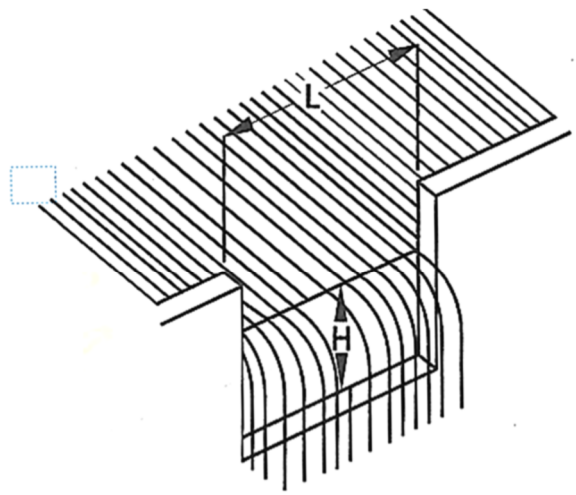

HEAD (*H*) (inches)	CAPACITY OF SCUPPER (gallons per minute)									
	Length (*L*) of scupper (inches)									
	4	6	8	10	12	18	24	30	36	48
1	10.7	17.4	23.4	29.3	35.4	53.4	71.5	89.5	107.5	143.7
2	30.5	47.5	64.4	81.4	98.5	149.4	200.3	251.1	302.1	404.0
3	52.9	84.1	115.2	146.3	177.8	271.4	364.9	458.5	552.0	739.0
4	76.7	124.6	172.6	220.5	269.0	413.3	557.5	701.8	846.0	1135.0
6	123.3	211.4	299.5	387.5	476.5	741.1	1005.8	1270.4	1535.0	2067.5

For SI: 1 inch = 25.4 mm, 1 foot = 304.8 mm, 1 gallon per minute = 3.785 L/m.
Based on the Francis formula:

Figure 1106.5.2 Francis Formula

Francis Formula:

$Q = 3.33\ (L - 0.2H)\ H^{1.5}$

Where:

Q = Flow rate (cubic feet per second)

L = Length of scupper opening (feet).

H = Head on scupper [feet (measured 6 feet back from opening)]

CHAPTER 13
NONPOTABLE WATER SYSTEMS

SECTION 1301
GENERAL

Section 1301.13 Sub-metered irrigated landscape thresholds is added as follows:

1301.13 Sub-metered irrigated landscape thresholds. Irrigated landscape area greater than 25,000 square feet (2322.6 m^2) shall have a master valve and shall be sub-metered with equipment that can remotely measure and transmit water use data.

PLUMBING CODE APPENDICES
STATUS OF ADOPTION FOR APPENDICES

Appendices are Adopted or Not Adopted as part of this Code as noted in Appendix Adoption Table 1. Provisions in Appendices that are Adopted carry the full weight and mandatory enforceability of this code.

PLUMBING CODE APPENDIX ADOPTION TABLE 1

APPENDIX	TITLE	STATUS
A	Plumbing Permit Fee Schedule	Not Adopted
B	Rates of Rainfall for Various Cities	Not Adopted
C	Structural Safety	Adopted
D	Degree Day and Design Temperatures	Not Adopted
E	Sizing of Water Piping System	Adopted
F	Board of Appeals	Not Adopted

END OF 2022 DENVER PLUMBING CODE

2022
DENVER FUEL GAS CODE

COMPRISED OF
2022 DENVER AMENDMENTS

TO THE 2021 EDITION OF THE

INTERNATIONAL FUEL GAS CODE (IFGC) AND APPENDICES

AS PUBLISHED BY INTERNATIONAL CODE COUNCIL (ICC)

The 2021 International Fuel Gas Code and all errata to that code is hereby adopted and incorporated by reference except for the amendments to each chapter and appendix of the 2021 International Fuel Gas Code specified below as part of the Denver Building Code.

CHAPTER 1
ADMINISTRATION

SECTION 101
GENERAL

Section 101.1 Title is deleted in its entirety and replaced as follows:

101.1 Title. These regulations shall be known as the Denver Fuel Gas Code (DFGC), hereinafter referred to as "this code."

Section 102.8.3 Renaming of certain referenced codes is added to read as follows:

102.8.3 Renaming of certain referenced codes. Any references to the International Building Code, International Energy Conservation Code, International Fire Code, International Plumbing Code, International Residential Code, International Mechanical Code, International Existing Building Code, and NFPA 70 means the Denver Commercial Building Code, Denver Energy Code, Denver Fire Code, Denver Plumbing Code, Denver Residential Code, Denver Mechanical Code, Denver Existing Building Code, and the Electrical Code of the City and County of Denver, respectively.

Sections 103 through 109, and 113 through 116 are amended by deleting those sections in their entirety. Section 1 of the 2022 Denver Building Code shall govern.

CHAPTER 4
GAS PIPING INSTALLATIONS

SECTION 403
PIPING MATERIALS

Section 403.3.3 Copper and copper alloy is replaced in its entirety as follows:

403.3.3 Copper and copper alloy. Copper and copper alloy pipe shall not be used.

Section 403.4.3 Copper and copper alloy tubing is replaced in its entirety as follows:

403.4.3 Copper and copper alloy tubing. Copper and copper alloy tubing shall not be used.

SECTION 404
PIPING SYSTEM INSTALLATION

Section 404.3 Prohibited locations is amended by adding the following sentence to the end of the section:

Gas meters shall not be located in or under any building unless the meter is located in its own dedicated, adequately ventilated vault.

SECTION 406
INSPECTION, TESTING AND PURGING

Section 406.4.1 Test pressure is replaced in its entirety as follows:

406.4.1 Test pressure. The test pressure to be used shall be no less than 1½ times the proposed maximum working pressure, but not less than 10 psig (69 kPa gauge), irrespective of design pressure. For welded piping and for piping carrying gas at pressures exceeding 14 inches water column (3.5 kPa gauge) pressure, the test pressure shall be no less than 60 psig (414 kPa gauge). Where the test pressure exceeds 125 psig (862 kPa gauge), the test pressure shall not exceed a value that produces a hoop stress in the piping greater than 50 percent of the specified minimum yield strength of the pipe.

CHAPTER 5
CHIMNEYS AND VENTS

SECTION 501
GENERAL

Section 501.8 Appliances not required to be vented is amended by deleting Item 8 in its entirety.

CHAPTER 6
SPECIFIC APPLIANCE

SECTION 609
FLOOR FURNACES

Section 609 Floor furnaces is replaced in its entirety as follows:

609 Floor furnaces. Floor furnaces are prohibited.

SECTION 611
NONRECIRCULATING DIRECT-FIRED INDUSTRIAL AIR HEATERS

Section 611.2 Installation is amended by adding the following to the end of the section:

Non-recirculating direct-fired industrial air heaters shall be installed only in Group F, H, S and U occupancies and in commercial kitchens as makeup air for range hood exhaust systems. Such equipment shall only be used together with powered exhaust systems having airflow capacity at least equal to the capacity of the direct-fired heater to prevent the accumulation of products of combustion.

Section 611.7 Relief opening is deleted in its entirety.

SECTION 612
RECIRCULATING DIRECT-FIRED INDUSTRIAL AIR HEATERS

Section 612.3 Installation is amended by adding the following to the end of the section:

Recirculating direct-fired industrial air heaters may be installed only in Group F, H, S and U occupancies. All areas served by recirculating direct-fired industrial heaters must be protected by the installation of CO sensors spaced per manufacturer's recommendations. Whenever automatic carbon monoxide sensing devices exceed the NAAQS of 9 ppm for an 8-hour average or 35 ppm for a one-hour average, the CO sensors shall activate an increase in the exhaust air volume in order to reduce CO concentrations back below those prescribed levels.

Section 612.7 Relief opening is deleted in its entirety.

SECTION 621
UNVENTED ROOM HEATERS

Section 621 Unvented room heaters is replaced in its entirety as follows:

621 Unvented room heaters. Unvented room heaters are prohibited.

SECTION 623
COOKING APPLIANCES

Section 623.3.1 Residential cooking appliances vented by exhaust hoods is added as follows:

623.3.1 Residential cooking appliances vented by exhaust hoods. Where residential cooking appliances are gas-fired, a fan-powered exhaust system shall be installed and vented to the outside. The system shall be sized and installed in accordance with the manufacturer's instructions. Where not specified by the manufacturer, other *approved* published methods shall be used.

END OF 2022 DENVER FUEL GAS CODE

2022

DENVER ENERGY CODE

COMPRISED OF

2022 DENVER AMENDMENTS

TO THE 2021 EDITION OF THE

INTERNATIONAL ENERGY CONSERVATION CODE (IECC) AND APPENDICES

AS PUBLISHED BY THE

INTERNATIONAL CODE COUNCIL (ICC)

The content of the sections in this Code that begin with a letter or letters designations are maintained by other City or State entities.

[CRS] Colorado Revised Statute
[DOTI] Department of Transportation and Infrastructure/Wastewater Management

The 2021 International Energy Conservation Code and all errata to that code is hereby adopted and incorporated by reference except for the amendments to each chapter of the 2021 International Energy Conservation Code specified below.

ENERGY CODE COMMERCIAL PROVISIONS

CHAPTER 1 [CE]
SCOPE AND ADMINISTRATION

SECTION C101
SCOPE AND GENERAL REQUIREMENTS

Section C101.1 Title is replaced in its entirety as follows:

C101.1 Title. These regulations shall be known as the Denver Energy Code (DEC) and shall be cited as such. It is referred to herein as "this code".

Sections C102 is deleted in its entirety and replaced as follows:

Article 1, Section 1 of the 2022 Denver Building Code shall govern.

SECTION C103
CONSTRUCTION DOCUMENTS

Section C103.2.2 Energy compliance, is added as follows:

C103.2.2 Energy compliance. The Building Official is authorized to require additional documentation through written policy to ensure compliance with this code.

Section C103.2.3 2030 target EUI, is added as follows:

C103.2.3 2030 target EUI. The construction documents shall include the final 2030 target EUI required by Energize Denver (Art. XIV, Ch. 10 of the DRMC) applicable to the *building*. The EUI shall be determined in accordance with the *Rules and Regulations Governing Energize Denver Building Energy Performance Requirements* document available from the Office of Climate Action, Sustainability and Resiliency.

Sections C104 through C107, and C109 and C110 are deleted in their entirety. Section 1 of the 2022 Denver Building Code shall govern.

Section C108.1 Referenced codes and standards is amended by adding a new subsection as follows:

C108.1.3 Additional codes. Any references to the International Building Code, International Existing Building Code, International Fire Code, International Fuel Gas Code, International Mechanical Code, International Plumbing Code, International Residential Code, and NFPA 70 means the Denver Commercial Building Code, Denver Existing Building Code, Denver Fire Code, Denver Fuel Gas Code, Denver Mechanical Code, Denver Plumbing Code, Denver Residential Code, and the Electrical Code as adopted by the State of Colorado, respectively.

CHAPTER 2 [CE]
DEFINITIONS

SECTION C202
GENERAL DEFINITIONS

The following definitions are added:

ALL-ELECTRIC PROPERTY.
A property on a single assessment parcel with an accompanying legally described area of land as shown on a site plan, that, except for *emergency power systems* and *standby power systems*:

1) Contains no permanently installed equipment or appliances that utilize *combustion*, plumbing for *fuel gas* or fuel oil, or fuel gas utility connection installed within the *building(s)* or *site*; or,
2) Contains at least one new stand-alone all-electric building where the property includes existing *fuel gas* or fuel oil infrastructure built under a code effective prior to May 1, 2023.

AUTOMOBILE PARKING SPACE. A space within a building or private or public parking lot, exclusive of driveways, ramps, columns, office, and work areas, for the parking of an automobile.

CODE OFFICIAL. The building official as created in Chapter 1 of the Denver Building Code, Sec. 102.2

COMBUSTION. For purposes of this code, the rapid oxidation of fuel accompanied by the production of heat or heat and light.

COMMERCIAL COOKING APPLIANCE. Appliances used in a commercial food service establishment for heating or cooking food. For this definition, a commercial food service establishment is where food is prepared for sale or is prepared on a scale that is by volume and frequency not representative of domestic household cooking.

DEMAND RESPONSE PROGRAM. An agreement between a *building* occupant or *building* owner and third party to install and operate *demand responsive controls* in the building that automatically adjust building operations in response to a *demand response signal* from the third party.

DEMAND RESPONSE SIGNAL. A signal that indicates a price or a request to modify electricity consumption for a limited time period.

DEMAND RESPONSIVE CONTROL. A control capable of receiving and automatically responding to a *demand response signal*.

DIRECT CURRENT FAST CHARGING (DCFC) EVSE: (fast/rapid charging) Equipment capable of fast charging on a 100A or higher 480VAC three-phase branch circuit. AC power is converted into a controlled DC voltage and current within the EVSE that will then directly charge the *electric vehicle*.

ELECTRIC VEHICLE (EV). An automotive-type vehicle for on-road use, such as passenger automobiles, buses, trucks, vans, neighborhood electric vehicles, and electric motorcycles, primarily powered by an electric motor that draws current from a building electrical service, EVSE, a rechargeable storage battery, a fuel cell, a photovoltaic array, or another source of electric current.

ELECTRIC VEHICLE SUPPLY EQUIPMENT (EVSE). Equipment for plug-in power transfer including the ungrounded, grounded and equipment grounding conductors, and the *electric vehicle* connectors, attachment plugs, personal protection system and all other fittings, devices, power outlets or apparatus installed specifically for the purpose of transferring energy between the premises wiring and the *electric vehicle*.

ELECTRIC VEHICLE SUPPLY EQUIPMENT INSTALLED SPACE (EVSE Installed Space). An *automobile parking space* that is provided with a dedicated *EVSE* connection.

ELECTRIC VEHICLE CAPABLE SPACE (EV CAPABLE SPACE). A designated *automobile parking space* that is provided with electrical infrastructure, such as, but not limited to, raceways necessary for the future installation of an *EVSE*. No electrical service or panel capacity is required for EV Capable Spaces at the time of construction.

ELECTRIC VEHICLE READY SPACE (EV READY SPACE). An *automobile parking space* that is provided with a branch circuit and at least one of the following: an outlet; junction box; receptacle; or *EVSE*.

ELECTRIFICATION RETROFIT FEASIBILITY REPORT. A means a report that analyzes the feasibility of using an electric heat pump when certain appliances are proposed to be replaced without an electric heat pump, and that also lists the following: the cost of the appliance with and without an electric heat pump, the annual energy cost of the appliance with and without an electric heat pump, and the social cost of carbon dioxide over the life of the appliance with and without an electric heat pump.

EMERGENCY EQUIPMENT REPLACEMENT. Where only one piece of heating equipment, cooling equipment, ventilation system, or service water heating equipment is failing and is replaced by another having the same heating or cooling capacity, and no other alterations are made to the central HVAC system or central water heating system.

EMERGENCY POWER SYSTEM. A source of automatic electric power of a required capacity and duration to operate required life safety, fire alarm, detection, and ventilation systems in the event of a failure of the primary power. Emergency power systems are those required for electrical loads where interruption of the primary power could result in loss of human life or serious injuries.

Delete Group R and replace with:

GROUP R. Buildings or portions of buildings that contain any of the following occupancies as established in the *Denver Commercial Building Code*:

1. Group R-1.
2. Group R-2.
3. Group R-4 more than three stories in height above grade plane.

Delete residential building and replace with:

RESIDENTIAL BUILDING. For purposes of this code, detached one- and two-family dwellings and multiple single-family dwellings (townhouses) and Group R-3 and R-4 buildings three stories or less in height above grade plane.

PREDICTED ENERGY USE INTENSITY (pEUI): the annual site energy use of the *proposed design* per year in units of kBtu/sq.ft. (of building floor area).

SOCIAL COST OF CARBON DIOXIDE. Means either $79 per metric ton of carbon dioxide with annual escalation rate of 2.5% from January 1st, 2022, or the social cost of carbon dioxide as determined by the Public Utilities Commission of the State of Colorado, whichever is greater.

SOLAR-READY ZONE. A section or sections of the roof or building designated and reserved for the future installation of a solar photovoltaic and/or solar thermal system.

STANDBY POWER SYSTEM. A source of automatic electric power of a required capacity and duration to operate required building, hazardous materials or ventilation systems in the event of a failure of the primary power. Standby power systems are those required for electrical loads where interruption of the primary power could create hazards or hamper rescue or fire-fighting operations.

STEEP-SLOPED ROOF. A roof or roof section with a rise over run of at least 2 in 12 (2:12).

UNGUARDED BLOWER DOOR TEST. A test where pressures are induced only via a Blower Door (or Blower Doors) attached to the subject Dwelling Unit, not induced through the use of Blower Doors attached to spaces adjacent to the subject Dwelling or Sleeping Unit.

WATER USAGE EFFECTIVENESS, SITE. The total water consumed onsite for a data center divided by its electrical energy consumption, in units of liters per kilowatt hour (L/kWh). Represented as WUE_{site} or WUE; when no subscript is present the water usage effectiveness is presumed to be at the site level.

CHAPTER 4 [CE]
COMMERCIAL ENERGY EFFICIENCY

SECTION C401
GENERAL

Sections C401.2 Application and C401.2.1 International Energy Conservation Code are modified as follows:

C401.2 Application. Commercial buildings shall comply with C401.2.1

C401.2.1 Denver Energy Code. Commercial buildings shall comply with one of the following:

1. Prescriptive Compliance. The Prescriptive Compliance Option requires compliance with Sections C402 through C406 and C408.
2. Total Building Performance. The Total Building Performance Option requires compliance with Section C407, Appendix PT, or Appendix SE.

Exception: Additions, alterations, repairs, and changes of occupancy to existing buildings complying with Chapter 5.

Section C401.2.2 ASHRAE 90.1 is deleted in its entirety.

SECTION C402
BUILDING ENVELOPE REQUIREMENTS

Section C402.1.4.3 Thermal resistance of cold-formed steel walls with exterior cavity insulation located between z-girts is added as follows:

C402.1.4.3 Thermal resistance of cold-formed steel walls with exterior cavity insulation located between z-girts is added Where vertical or horizontal metal z-girts extend continuously through exterior insulation on steel frame walls, the exterior insulation shall be considered *cavity insulation* and the U-factor of the assembly shall be determined for compliance in accordance with Section C402.1.4.2 and Equation 4-1. The value of ER in Equation 4-1 shall include the effective R-value of any cavity insulation located between steel studs in accordance with Table C402.1.4.2 plus the effective R-value of exterior insulation located in the cavity between continuous z-girts determined by multiplying the rated R-value of the exterior cavity insulation by one of the following correction factors:

1. 0.7 for horizontal z-girts
2. 0.6 for vertical z-girts aligned with steel studs.

Exceptions:

1. Where metal z-girts or channels are placed over top of an exterior insulation layer and are fastened through the exterior insulation without compressing the exterior insulation or are attached to intermittent clips extending through the full thickness of the exterior insulation, the exterior insulation layer shall be considered as *continuous insulation* for purposes of compliance with Section C402.1, Item 1.
2. Where a U-factor for the assembly with z-girts is determined by design using an *approved* analysis method or by testing in accordance with ASTM C1363.

The first paragraph of Section C402.1.5 Component performance alternative is modified by adding a sentence to the end of the section and Table C402.1.5 as follows. Other portions of the section remain unchanged.

C402.1.5 Component performance alternative.

Roofs, walls, and floors shall meet applicable maximum U-factor requirements of Table C402.1.5.

TABLE C402.1.5 MINIMUM INSULATION REQUIREMENTS FOR PROPOSED DESIGN[a, b, c]

Component	Assembly	Maximum U-Factor All Occupancies
Roof	Insulation entirely above deck	0.048
Roof	Metal Building	0.055
Roof	Attic and other	0.027
Wall	Mass	0.090
Wall	Metal Building	0.069
Wall	Metal Framed	0.064
Wall	Wood Framed and Other	0.064
Floors, above grade	Mass or framed	0.074

Footnotes:

a. Up to 5% of the area of the (non-spandrel) total building thermal envelope may be excluded from the U-factor requirements of Table C402.1.5
b. Spandrels/spandrel panels need not comply with the U-factor requirements of Table C402.1.5.
c. Buildings with data centers or computer rooms that have a design continuous load greater than 750 kW shall not be required to meet the insulation requirements of Table C402.1.5.

Table C402.4 is replaced as follows:

TABLE C402.4

BUILDING ENVELOPE FENESTRATION MAXIMUM U-FACTOR AND SHGC REQUIREMENTS

CLIMATE ZONE	5	
	VERTICAL FENESTRATION	
	U-FACTOR FOR VERTICAL CURTAIN WALLS, STOREFRONT, AND SITE-BUILT FENESTRATION TYPE AW PRODUCTS[a]	
FIXED FENESTRATION	0.36	
OPERABLE FENESTRATION	0.45	
	U-FACTOR FOR ENTRANCE DOORS	
	0.63	
	U-FACTOR FOR ALL OTHER VERTICAL FENESTRATION	
	0.30	
	SHGC	
	Fixed	Operable
PF < 0.2	0.38	0.33
0.2 ≤ PF <0.5	0.46	0.40
PF ≥ 0.5	0.61	0.53
	SKYLIGHTS	
U-FACTOR	0.50	
SHGC	0.40	

NR = No Requirement, PF = Projection Factor.

a. AW Products shall mean metal windows with an AW Performance Class Rating in accordance with AAMA/WDMA/CSSA 101/I.S.2/A440.

Section C402.5 Air leakage—thermal envelope is replaced as follows (other subsections remain unchanged, unless noted otherwise):

C402.5 Air leakage—thermal envelope. The *building thermal envelope* shall comply with Sections C402.5.1 through C402.5.11.1 and shall be tested in accordance with Section C402.5.2 for occupancy types R or I, or Section C402.5.3 for all other occupancy types.

C402.5.1.2 RESERVED.

C402.5.1.3 RESERVED.

C402.5.1.4 RESERVED.

Section C402.5.1.5 Building envelope performance verification is modified as follows (Item 3 remains without modification):

C402.5.1.5 Building envelope performance verification. The installation of the continuous air barrier shall be verified by a *registered design professional* or *approved agency* in accordance with the following:

1. A review of the construction documents and other supporting data shall be conducted to assess compliance with requirements in Section C402.5.1. A verification report shall be completed by the *registered design professional* or *approved agency* and included in the submittal with the permit application.
2. Inspection of continuous air barrier components and assemblies shall be conducted during construction while the air barrier is still accessible for inspection and repair to verify compliance with the requirements of Sections C402.5.2 and C402.5.3.

Section C402.5.2 Dwelling and sleeping unit enclosure testing is modified by adding the exception:

Exception: Where the measured air leakage rate exceeds 0.30 cfm/ft^2 (1.5 L/s × m^2) but does not exceed 0.45cfm/ft^2 (2.25 L/s × m^2), a diagnostic evaluation using smoke tracer or infrared imaging shall be conducted while the building is pressurized along with a visual inspection of the air barrier. Any leaks noted shall be sealed where such sealing can be made without destruction of existing building components. An additional report identifying the corrective actions taken to seal leaks shall be submitted to the code official and the building owner, and shall be deemed to comply with the requirements of this section.

Section C402.5.5 Rooms with fuel-burning appliances is replaced as follows, items 1, 2, and all subsections of 2 to remain):

C402.5.5 Rooms with fuel-burning appliances. In Climate Zones 3 through 8, where combustion air is supplied through openings in an exterior wall to a room or space containing space conditioning or service water heating fuel-burning appliances, one of the following shall apply:

Section C402.5.11 Operable openings interlocking, exception #4 is added as follows:

4. Systems utilizing evaporative cooling do not need to reset the cooling setpoint and are allowed to operate using evaporative cooling only. Other forms of mechanical cooling are not allowed when operable openings are open.

SECTION C403
BUILDING MECHANICAL SYSTEMS

Section C403.1.2 Data centers is replaced in its entirety as follows:

C403.1.2 Data centers. Data center systems shall comply with Sections 6 and 8 of ASHRAE 90.4 with the following changes:

1. Replace annualized MLC values specified in Table 6.5 of ASHRAE 90.4 with the values in Table C403.1.2(1).

2. Data centers with active humidification systems that have an ITE design load exceeding 35 kW (10 tons) per/room and 20 W/ft^2 of condition floor area shall utilize only adiabatic humidification systems.

3. Data centers with air-cooled computers in racks and with an ITE design load exceeding 35 kW (10 tons) per/room and 20 W/ft^2 of conditioned floor area shall include air barriers such that there is no significant air path for computer discharge air to recirculate back to computer inlets without passing through a cooling system. When containment is required within existing data centers, containment shall only be required at new/relocated racks and at existing racks where the ITE design load is being increased.

Exceptions:

1. Expansions of existing data centers where the added ITE design load does not exceed 35 kW (10 tons) per room and 20 W/ft^2 of conditioned floor area.
2. Computer racks with a design load less than 4 kW (1.1 tons) per /rack.

4. Evaporative cooling towers used in data centers shall use utility recycled water when a recycled water tap is available to the site.

5. Data centers shall be required to report the site level water usage effectiveness (WUE_{site}) at the request of the building official.

TABLE C403.1.2(1)

MAXIMUM ANNUALIZED MECHANICAL LOAD COMPONENT (ANNUALIZED MLC)

(supersedes Table 6.5, ASHRAE 90.4)*

Climate Zones as Listed in ASHRAE Standard 169	**HVAC Maximum *Annualized MLC* For *Data Center ITE Design Power* > 300 *kW***	**HVAC Maximum *Annualized MLC* For *Data Center ITE Design Power* < 300 *kW***
5B	0.12	0.20

Section C403.2 System design is replaced as follows:

C403.2 System design. Mechanical systems shall be designed to comply with Sections C403.2.1 through C403.2.4. Where elements of a building's mechanical systems are addressed in Sections C403.3 through C403.15, such elements shall comply with the applicable provisions of those sections.

Section C403.2.3 Fault detection and diagnostics is modified as follows (with subordinate sections to remain); and the addition of exception #2:

C403.2.3 Fault detection and diagnostics. New buildings with an HVAC system serving a gross conditioned floor area of 25,000 square feet (2,322 m2) or larger shall include a fault detection and diagnostics (FDD) system to monitor the HVAC system's performance and automatically identify faults. The FDD system shall:

Exceptions:

2. Warehouse buildings with heating-only systems.

Section C403.2.4 Space heating equipment is added as follows:

Permit applications submitted to the Agency after January 1st, 2024, shall comply with section C403.2.4.

C403.2.4 Space heating equipment. Fossil-fuel warm air furnaces and electric resistance space heating equipment shall not be permitted for space heating.

Exceptions:

1. Where it has been demonstrated to the *building official* that the *building* is required by an applicable law or regulation to provide space heating with an *emergency power system* or a *standby power system*.
2. Make-up air systems where energy recovery ventilation is prohibited by the Denver Mechanical Code.
3. *Electric resistance in buildings* that comply with Section C407, Appendix SE, or Appendix PT.
4. Electric resistance heat used for supplementary heat in accordance with Section C403.4.1.1.
5. A budget up to 5 W/ft^2 of electric resistance space heating of *conditioned floor area* in the *building,* not including supplementary heat.
6. Electric resistance heating elements integrated into heat pump equipment.
7. Replacement gas-fired furnace equipment that complies with section C503.3.3.
8. Fossil-fuel warm air furnaces or electric resistance space heating equipment serving heated plenums or electric resistance for freeze protection elements.
9. Replacement of electric resistance space heating equipment with the same KW input as equipment being replaced.

Section C403.4.1.1 Heat pump supplementary heat is replaced as follows:

C403.4.1.1 Heat pump supplementary heat. Heat pumps having supplementary heat systems, shall have controls that limit supplementary heat operation to only those times when one of the following applies:

1. The vapor compression cycle cannot provide the necessary heating energy to satisfy the thermostat setting.
2. The heat pump is operating in defrost mode.
3. The vapor compression cycle malfunctions.
4. The thermostat malfunctions.

Section C403.5 Economizers is modified by replacing item #2 as follows.:

2. Individual fan systems with a manufacturer published nominal cooling capacity greater than or equal to 33,000 Btu/h (9.7 kW) in buildings having other than a Group R occupancy. The total supply capacity of all fan cooling units not provided with economizers shall not exceed 20 percent of the total supply capacity of all fan cooling units in the building or 300,000 Btu/h (88 kW), whichever is greater.

Section C403.5.1 Integrated economizer control is modified by replacing item #2 as follows:

2. Direct expansion (DX) units that control 75,000 Btu/h (22 kW) or greater of rated capacity of the capacity of the mechanical cooling directly based on occupied space temperature shall have not fewer than two stages of mechanical cooling capacity.

2.1. Rooftop units with a rated capacity of at least 33,000 Btu/h (9.7 kW) but less than 75,000 Btu/h (22 kW) shall have an airside economizer with at least two stages of capacity control, with the first stage controlling the economizer and the second stage controlling mechanical cooling.

Section C403.7.4.2 Spaces other than nontransient dwelling units is replaced as follows, exceptions to remain except as indicated below:

C403.7.4.2 Spaces other than nontransient dwelling units. Where the outside or exhaust airflow rate of a system serving a space other than a nontransient dwelling unit exceeds the values specified in modified Tables C403.7.4.2(1) and C403.7.4.2(2), the system shall include an energy recovery system.

The energy recovery system shall provide an enthalpy recovery ratio (ERR) of not less than 60 percent at balanced airflow conditions. Where an air economizer is required, the energy recovery system shall include bypasses on outside and exhaust air or controls that permit operation of the economizer as required by Section C403.5. Energy recovery devices shall not exceed 1.1" w.g. sea level at design airflows and shall not exceed 0.6" w.g. sea level in 100% outside air & exhaust air economizer mode. Supply and exhaust fan static efficiency must meet 65%.

Section C403.7.4.2 exceptions 6 and 8 are replaced as follows:

6. Enthalpy recovery ratio requirements at cooling design conditions in Climate Zone 5B; however heating enthalpy recovery ratio shall be required.

8. Where the largest source of air exhausted at a single location at the building exterior is less than corresponding exhaust CFM in Tables C403.7.4.2(1) or (2).

Section C403.7.4.2 adds exceptions 12 and 13 as follows:

12. When the exhaust flow in tables C403.7.4.2(1) or (2) are exceeded, and exhaust to outside ratios are below 60%, an outside air bypass shall be permitted to be employed with a control method to ensure the exhaust to outside air ratio stays at or above 60%. Outside air heat wheel CFM and bypass CFM shall be clearly noted on the plans.

13. In Laboratories and Group I occupancies, where an authority having jurisdiction prohibits recirculation or leakage between exhaust and supply air, the ERR shall not be less than 50 percent at balanced airflow conditions.

Tables C403.7.4.2 (1) and (2) are replaced as follows:

TABLE C403.7.4.2 (1)

ENERGY RECOVERY REQUIREMENTS

(Ventilation systems operating less than 8,000 hours per year)

CLIMATE ZONE	PERCENT (%) OUTDOOR AIR AT FULL DESIGN AIRFLOW RATE							
	≥10 & < 20	≥20 & < 30	≥30 & < 40	≥40 & < 50	≥50 & < 60	≥60 & < 70	≥70 & < 80	≥80
	DESIGN OUTSIDE OR EXHAUST AIRFLOW RATE (CFM)							
5B Outside	NR	NR	NR	NR	6,000	5,500	5,000	4,000
5B Exhaust	NR	NR	NR	NR	4,500	4,125	3,750	3,000

For SI: 1 CFM = 0.4719 L/s.

NR = Not required

Informative note: Requirements are based on a 10-year payback

TABLE C403.7.4.2 (2)

ENERGY RECOVERY REQUIREMENTS

(Ventilation systems operating 8,000 or more hours per year)

CLIMATE ZONE	PERCENT (%) OUTDOOR AIR AT FULL DESIGN AIRFLOW RATE							
	≥10 & < 20	≥20 & < 30	≥30 & < 40	≥40 & < 50	≥50 & < 60	≥60 & < 70	≥70 & < 80	≥80
	DESIGN OUTSIDE OR EXHAUST AIRFLOW RATE (CFM)							
5B Outside	500	400	300	200	84	84	80	80
5B Exhaust	1,500	1,200	900	600	252	252	240	240

For SI: 1 CFM = 0.4719 L/s.

Section C403.7.8 Variable air volume, single zone variable air volume (SZVAV), dedicated outside airflow (DOAS), energy recovery ventilator (ERV) and make up air (MUA) system control is added as follows:

C403.7.8 Variable air volume, single zone variable air volume (SZVAV), dedicated outside airflow (DOAS), energy recovery ventilator (ERV) and make up air (MUA) system control. Variable air volume, SZVAV, DOAS, ERV and MAU air distribution systems, shall be provided with controls to regulate the flow of outdoor air. Such control system shall be designed to provide fault on excessive outside air, and display or report to DDC and measure and maintain the flow rate of outdoor air, at a rate of not less than that required by Section 403.3 of the *Denver Mechanical Code* over the entire range of supply air operating rates. DOAS, ERV and MAUs shall be required to measure the outside air flow on systems above 4,000 cfm.

Section C403.8 Fans and fan controls is replaced in its entirety as follows, subordinate sections to remain:

C403.8 Fans and fan controls. Fans in HVAC systems shall comply with Sections C403.8.1 through C403.8.6.2

Section C403.8.6.2 Intermittent Exhaust Control for Bathrooms and Toilet Rooms is added as follows:

C403.8.6.2 Intermittent Exhaust Control for Bathrooms and Toilet Rooms. Where an exhaust system serving a bathroom or toilet room is designed for intermittent operation, the exhaust system shall be provided with manual-on and one or more of the following controls:

1. Timer control that has a minimum set point of not greater than 30 minutes.
2. An occupant sensor control that automatically turns off exhaust fans within 30 minutes after all occupants have left the space.
3. A humidity control capable of manual or automatic adjustment from a minimum setpoint not greater than 50% to a maximum setpoint not greater than 80% relative humidity.
4. A contaminant control that responds to a particle or gaseous concentration.

Exception: Bathroom and toilet room exhaust systems serving as an integral component of an outdoor air ventilation system in Group R-2, R-3, and R-4 occupancies shall not be required to provide controls other than manual on capability.

An off setpoint shall not be used to comply with a minimum setpoint requirement.

Section C403.15 Dehumidification and cooling efficiency for plant growth and maintenance and subsections are added as follows:

C403.15 Dehumidification and cooling efficiency for plant growth and maintenance. Indoor agricultural operations shall follow the requirements for dehumidification and cooling from sections C403.15.1 and C403.15.2. Space cooling equipment for indoor plant grow operations shall meet the minimum energy efficiency ratio (EER) or seasonal energy efficiency ratio (SEER) specified in C403.3.2.

C403.15.1 Dehumidification. All dehumidification provided for indoor plant growth and maintenance shall utilize one of the following dehumidification options:

1. Free-standing dehumidification units with a minimum energy factor of 1.9 l/kWh. The test method for minimum energy factor shall be as specified in 10 CFR Part 430, Subpart B - Appendix X.

2. Chilled water system with heat recovery from the condenser coil to achieve dehumidification reheat.

3. Integrated HVAC system with heat recovery from the condenser coil (hot gas reheat) to achieve dehumidification reheat.

C403.15.2 Dehumidification backup. Electric or fossil fuel reheat systems may be used as supplementary heat for dehumidification when the primary dehumidification system in C403.15.1 is designed to fulfill at least 60% of the facility's dehumidification needs during peak dehumidification periods.

SECTION C404
SERVICE WATER HEATING

Section C404.10 through C404.12 are added as follows:

Effective January 1st, 2024: Permit applications submitted to the Agency after January 1st, 2024, shall comply with section C404.10.

C404.10 Water heating. Fossil fuel and electric resistance *water heaters* shall not be permitted to provide potable hot water.

Exceptions

1. Resistance heating elements integrated into heat pump water heating equipment.
2. Electric resistance elements used for recirculation loop temperature maintenance.
3. Electric storage water heaters with a rated water storage volume no greater than 20 gallons.
4. Instantaneous electric water heaters located within 10 feet of the point of use.
5. Hot water storage tanks without electric resistance or fossil-fuel heating elements.
6. Electric resistance equipment where not less than 100 percent of the annual service water-heating requirement is provided by an *on-site renewable energy system* not used to meet any other provision of this code.
7. Water heating systems that serve end-uses that require water temperature of 141°F (55°C) or greater.
8. Electric resistance storage water heating equipment in *buildings* where not less than 75% of the annual service water heating requirement is met by a solar thermal system.
9. *Electric resistance water heating in buildings* that comply with Section C407, Appendix SE, or Appendix PT.
10. Replacement of gas-fired storage water heaters or instantaneous water heaters that comply with section C503.4.1.
11. Water heating equipment with at least one of the following: a heat input of 200,000Btu/hr or greater; or an operating temperature of 210 degrees F or greater; or a nominal storage capacity of 120 gallons or greater.
12. Replacement of electric resistance water heaters with the same KW input and tank volume as the equipment being replaced.

C404.11 Demand responsive water heating. Electric storage water heaters with rated water storage volume equal to or greater than 40 gallons (150L) and equal to or less than 120 gallons (450L) and a nameplate input rating equal to or less than 12kW shall be provided with *demand responsive controls* that comply with ANSI/CTA-2045 and are also capable of initiating water heating to meet the temperature set point in response to a *demand response signal* or another equivalent *approved* standard.

Exceptions:

1. Water heaters that provide a hot water delivery temperature of 180°F (82°C) or greater
2. Water heaters that comply with Section IV, Part HLW or Section X of the ASME Boiler and Pressure Vessel Code
3. Water heaters that use 3-phase electric power

C404.12 Water heating equipment location. Fossil fuel water heaters with an input capacity less than 300,000Btu/h and electric resistance storage water heaters shall be located in a space with minimum dimensions 3 feet by 3 feet by 7 feet and one of the following characteristics:

1. Minimum volume of 760 cubic feet
2. The equivalent of one 16-inch by 24-inch grill to a heated space and one 8-inch duct of no more than 10 feet in length for cool exhaust air.

Exceptions:

1. Electric storage water heaters with a rated storage volume of less than 20 gallons.
2. Instantaneous water heaters located within 10 feet of the point of use.
3. The space and ventilation requirements shall be permitted to be reduced to conform with the manufacturer's recommendations for a specific heat pump hot water heater that meets the requirements of Section C404. The specific heat pump water heater shall be identified on the construction documents.

SECTION C405
ELECTRICAL POWER AND LIGHTING SYSTEMS

Section C405.1 General is replaced as follows:

C405.1 General. This section covers lighting system controls, the maximum lighting power for interior and exterior applications, and electrical energy consumption.

Section C405.1.1 Lighting for dwelling units and sleeping units replaced as follows:

C405.1.1 Lighting for dwelling units and sleeping units. All permanently installed luminaires in *dwelling units* and *sleeping units* shall be provided with lamps or light sources with an efficacy of not less than 65 lm/W.

Section C405.2 Lighting controls adds item 2.4 as follows:

2.4 Reducing lighting power in a uniform manner by no less than 10 percent when signaled by a *demand responsive control*.

Section C405.2.7 Exterior lighting controls, Exception 1 is replaced as follows:

1. Lighting for covered vehicle entrances and exits from buildings where required for eye adaption.

Section C405.3.2 Interior lighting power allowance

Section C405.3.2 Interior lighting power allowance, Table C405.3.2(1) Interior Lighting Power Allowances: Building Area Method is modified by deleting footnotes a, b, and c.

Section C405.4 Lighting for plant growth and maintenance is replaced as follows:

C405.4 Lighting for plant growth and maintenance. All non-LED lighting using replaceable lamps shall be installed with electronic ballasts. In addition, not less than 95 percent of the total Watts of lighting for areas used for plant growth and plant maintenance shall be provided by lighting having a photosynthetic photon efficacy of not less than 1.6 µmol/J (luminaires), or 1.9 µmol/J (lamps). Indoor agriculture facilities shall demonstrate lighting requirements in accordance with one of the following:

1. LED luminaires listed in the Design Lights Consortium's Horticultural Qualified Products List (QPL), https://www.designlights.org/horticultural-lighting/search.
2. Double-ended high-pressure sodium (HPS) lamps with efficacies of 1.9 µmol/J or greater, used with any reflector and ballast combination.
3. For lamps or luminaires not included in 1) or 2) above, compliance with the efficacy requirements of this section must be demonstrated by either providing manufacturer's documentation indicating the luminaire or lamp efficacy or by submitting for review a third-party test report providing the lamps' or luminaires' photosynthetic photon efficacy (measured in µmol/J), generated by a facility accredited to the ANSI/ASABE S642, ANSI/IES LM-79, or ANSI/IES LM-51 standards.

Section C405.13. Electric vehicle (EV) supply equipment is added as follows:

C405.13 *Electric Vehicle Supply Equipment.* New parking facilities shall be provided with *electric vehicle charging infrastructure* in accordance with Sections C405.13.1 through C405.13.6.

C405.13.1 Quantity. The number of required *EVSE Installed Spaces*, *EV Capable spaces* and *EV Ready spaces* shall be determined in accordance with this Section and Table C405.13.1 based on the total number of *automobile parking spaces* and shall be rounded up to the nearest whole number.

1. Where more than one parking facility is provided on a building site, the number of required *automobile parking spaces* required to have *electric vehicle charging infrastructure* shall be calculated separately for each parking facility.
2. Where one shared parking facility serves multiple building occupancies, the required number of spaces shall be determined proportionally based on the floor area of each building occupancy.
3. *EVSE Installed spaces* that exceed the minimum requirements of this section may be used to meet minimum requirements for *EV Ready Spaces* and *EV Capable spaces*.
4. Installed *EV ready spaces* that exceed the minimum requirements of this section may be used to meet minimum requirements for *EV Capable spaces*.
5. Requirements for a Group S-2 parking garage shall be determined by the occupancies served by that parking garage. Where new automobile spaces do not serve specific occupancies, the values for Group S-2 parking garage in Table C405.13.1 shall be used.
6. The number of *EVSE Installed* Spaces for Groups A, B, E, I, M and S-2 Occupancies may be reduced by up to ten per *DCFC EVSE* provided that the *building* includes not less than one parking space equipped with a *DCFC EVSE* and not less than one *EV Ready space*. A maximum of fifty spaces may be reduced from the total number of *EVSE Installed spaces*.

Exception: Parking facilities serving occupancies other than R-2 occupancies with fewer than 10 automobile parking spaces.

Table C405.13.1 REQUIRED EV CHARGING INFRASTRUCTURE

OCCUPANCY	EVSE INSTALLED SPACES	EV READY SPACES	EV CAPABLE SPACES
GROUP A, B, E, M	10%	5%	10%
GROUP I	5%	0%	5%
GROUP R-1 AND R-2[a]	15%	5%	40%
GROUP R-3 AND R-4	2%	0%	5%
GROUP S-2 parking garages	10%	5%	0%

[a.] Where all parking spaces serving R-2 occupancies are *EV ready spaces*, requirements for *EVSE spaces* for R-2 occupancies shall not apply.

C405.13.2 EV Capable Spaces. Each *EV Capable space* used to meet the requirements of Section C405.13.1 shall comply with all the following:

1. A continuous raceway or cable assembly shall be installed between an enclosure or outlet located within 3 feet (914 mm) of the *EV Capable space* and future or existing panelboard or switchboard location(s).
2. Installed raceway or cable assembly shall be sized and rated to supply a minimum circuit capacity in accordance with C405.13.5.
3. The electrical equipment room shall be provided with dedicated space for the future installation of the electrical distribution equipment required to serve the *EVSE*. Such equipment may include service switchgear, distribution panelboards, and transformers.
4. The electrical enclosure or outlet and the electrical distribution equipment directory shall be marked: "For future electric vehicle supply equipment (EVSE)."

C405.13.3 EV Ready Spaces. Each branch circuit serving *EV Ready Spaces* used to meet the requirements of Section C405.13.1 shall comply with all the following:

1. Terminate at an outlet or enclosure, located within 3 feet (914 mm) of each *EV Ready space* it serves.
2. Have a minimum circuit capacity in accordance with C405.13.5.
3. The panelboard or other electrical distribution equipment directory shall designate the branch circuit as "For electric vehicle supply equipment (EVSE)" and the outlet or enclosure shall be marked "For electric vehicle supply equipment (EVSE)."

C405.13.4 EVSE Installed Spaces. An installed *EVSE* with multiple output connections shall be permitted to serve multiple *EVSE Installed Spaces*. Each *EVSE* installed to meet the requirements of Section C405.13.1, serving either a single *EVSE Installed space* or multiple *EVSE Installed spaces*, shall comply with all the following:

1. Have a minimum circuit capacity in accordance with C405.13.5.
2. Have a minimum charging rate in accordance with C405.13.4.1.
3. Be located within 3 feet (914 mm) of each *EVSE Installed space* it serves.
4. Be installed in accordance with Section C405.13.6.

C405.13.4.1 EVSE Minimum Charging Rate. Each installed *EVSE* shall comply with one of the following:

1. Be capable of charging at a minimum rate of 6.2 kVA (208/240V).
2. For R-1 and R-2 Occupancies, where serving multiple *EVSE Installed spaces* and controlled by an energy management system providing load management, be capable of simultaneously charging each *EVSE Installed space* at a minimum rate of no less than 3.3 kVA.
3. Where serving *EVSE Installed spaces* allowed to have a minimum circuit capacity of 2.7 kVA in accordance with C405.13.5.1 and controlled by an energy management system providing load management, be capable of simultaneously charging each *EVSE space* at a minimum rate of no less than 2.1 kVA.

C405.13.5 Circuit Capacity. The capacity of electrical infrastructure serving each *EV Ready space* and *EVSE Installed space* shall comply with one of the following:

1. A branch circuit shall have a rated capacity not less than 8.3 kVA for each *EV Ready space* or *EVSE Installed space* it serves.
2. The requirements of C405.13.5.1.

C405.13.5.1 Circuit Capacity Management. The capacity of each branch circuit serving multiple *EVSE Installed Spaces* or *EV Ready Spaces* designed to be controlled by an energy management system providing load management in accordance with NFPA 70, shall comply with one of the following:

a. Have a minimum capacity of 4.1 kVA per space.
b. Have a minimum capacity of 2.7 kVA per space when serving *EV ready spaces* or *EVSE spaces* for a building site when all (100%) of the automobile parking spaces are designed to be *EV ready* or *EVSE spaces*.

C405.13.6 EVSE Installation. *EVSE* shall be installed in accordance with NFPA 70 and shall be listed and labeled in accordance with UL 2202 or UL 2594. *EVSE Installed Spaces* shall comply with accessible and universal requirements of Denver Commercial Building Code Section 1107.

Section C405.14. Solar access requirement and its subsections are added as follows:

C405.14 Solar access requirement. All newly constructed buildings of Occupancy Group A, B, E, M, R1 and R2 shall designate a dedicated solar-ready zone on the building plans that meets the specifications of Appendix CB. This zone shall be located on the roof or overhang of the building or on the roof or overhang of another structure located within 250 feet of the building on the building premise or on covered parking installed with the building project.

Section C405.15 Additional electric infrastructure and its subsection are added as follows:

C405.15 Additional electric infrastructure. The following fossil fuel appliances and equipment or connections serving new *buildings* shall be installed in accordance with this section and Section C404.12.

1. Water heating equipment with an input capacity less than 300,000 Btu/h, and used for either space heating, service water heating, or process water heating.
2. Warm air furnaces serving spaces without space cooling.
3. Fireplaces, ranges, and stoves not defined as *commercial cooking appliances*.
4. *Commercial cooking appliances*
5. Fossil Fuel appliances and equipment serving *dwelling units* or *sleeping units*

C405.15.1 Electric infrastructure. Fossil fuel appliances and equipment listed in Section C405.15 shall be provided with a junction box located within the same space of the fossil fuel appliance or equipment that is connected to an electrical panel by continuous raceways that meet the following requirements. Said junction box shall allow for the appliance or equipment to be installed within the same place of the fossil fuel equipment that it replaces:

1. The junction box, raceway, and bus bar in the electrical panel and conductors serving the electrical panel shall be sized to accommodate electrical equipment sized to serve the same load as the fossil fuel appliance or equipment.
2. The panel shall have reserved physical space for a two-pole or three-pole circuit breaker.
3. The junction box and electrical panel directory entry for the dedicated circuit breaker space shall have labels stating, "For future electric equipment".

SECTION C406
ADDITIONAL EFFICIENCY PACKAGE OPTIONS

Section C406.1 is modified as follows, subordinate sections to remain.

C406.1 Additional energy efficiency credit requirements. New buildings shall receive credits from Table C406.1(1) in accordance with the credit requirements in Table C406.1(2) based on the use group of the building and from credit calculations as specified in relevant subsections of C406. Where a building contains multiple use groups, credits from each use group shall be weighted by floor area of each group to determine the weighted average building credit. Credits from the tables or calculation shall be received where a building complies with one or more of the following:

12. Where not required by Section C403.2.4, include electric space heating in accordance with Section C406.13.
13. Cold climate heat pump in accordance with Section C406.14.
14. Where not required by Section C404.10, include electric water heating in accordance with Section C406.15.
15. Demand responsive controls in accordance with Section C406.16.
16. HVAC system fan power in accordance with Section C406.17.

TABLE C406.1(1) - Additional Energy Efficiency Credits for Denver

Sub-section / Occupancy	Group B	Group R and I	Group E	Group M	Other Occupancies[a]
C406.2.1: 5% Heating Eff Imprv.	1	1	1	2	1
C406.2.2: 5% Cooling Eff Imprv.	2	1	1	1	1
C406.2.3: 10 % Heating Eff Imprv.	2	2	3	3	3
C406.2.4: 10 % Cooling Eff Imprv.	4	1	2	2	2
C406.2.5: >10% Cooling Eff Imprv.	See Section				
C406.2.6: >10% Heating Eff Imprv.	See Section				
C406.3: Reduced Light Power	7	2	8	12	7
C406.3.2: Reduced lighting power by 15%	11	3	12	18	11
C406.3.2: Reduced lighting power by >15%	See Section				
C406.4: Enhanced Digital Light Ctrl	2	NA	2	3	2
C406.5.1: Basic Renewable Credit.	9	7	6	7	~~2~~7
C406.5.2: Enhanced Renewable Credit	9-18	7-14	6-12	7-14	7-14
C406.6: Dedicated OA Sys (DOAS)	5	8	NA	2	5
C406.7.2: Recovered/Renew SWH[b]	NA	14	1	NA	14
C406.7.3: Eff fossil fuel SWH[b]	NA	9	2	NA	6
C406.7.4: Heat Pump SWH[b]	NA	5	1	NA	5
C406.8.1: Reduced envelope UA	10	4	2	4	5
C406.8.2: Further reduced envelope UA	15	6	3	6	8
C406.9.1: Reduced Air Infiltration	4	5	NA	2	4
C406.9.2: Further Reduced Air Infiltration	7	8	NA	3	7
C406.10: Energy Monitoring	2	1	2	3	2
C406.11: Fault Detection	1	1	1	1	1
C406.12: Efficient Kitchen Equipment	See Section				
C406.13: All-Electric Space Heating	4	6	6	9	6
C406.14: Cold Climate Heat Pumps	4	5	5	9	6
C406.15: All-Electric Water Heating	9	13	13	4	9
C406.16: Demand Responsive Thermostats	1	1	1	1	1
C406.17.1: Reduced Fan Power	2	NA	6	7	3
C406.17.2: Further Reduced Fan Power	4	NA	11	14	6

a. Other occupancy groups include all Groups except for Groups B, R, I, E, and M
b. For occupancy groups listed in C406.7.1.

TABLE C406.1(2)
DENVER CREDIT REQUIREMENTS

Building Type	Credit Requirement for *All-Electric Properties* [a]	Credit Requirement for All Other *Buildings*
Multifamily	10	40
Healthcare/Hospital	10	40
Hotel/Motel	10	36
Office	10	31
Retail	10	35
School	10	24
Warehouse	10	48
All Other	10	40

a. Where the *all-electric property* complies with Sections C406.13 and C406.15. *All-electric properties* shall not be eligible for credits from Sections C406.13 and C406.15.

Section C406.1.1 Tenant spaces is modified, and Exception 2 is added as follows:

C406.1.1 Tenant spaces. Non-previously-occupied tenant spaces shall comply with sufficient options from Table C406.1(1) to achieve a minimum number of 10 credits, where credits are selected from Sections C406.2, C406.3, C406.4, C406.5, C406.6, C406.7, C406.8, C406.9, C406.10, C406.11, C406.12, C406.13, C406.14, C406.15, C406.16, or C406.17. Where analysis and documentation is provided to show the entire building, including the tenant space, complies with Table C406.1(2), tenant spaces shall be deemed to comply with this section.

Exceptions:

2. Where it can be demonstrated that the entire building complies with Section C407 or Appendix SE. Application of this exception is only valid if the tenant space was accurately modeled as a part of the entire building model.

Section C406.2.5 is amended by deleting the meanings of the following expression from equation 4-12 and replacing them as follows:

EEC_{10}= C406.2.4 credits from Table C406.1(1)

CEI = the improvement above minimum cooling and heat rejection efficiency requirements

Section C406.2.6 More than ten percent heating efficiency improvement is added as follows:

C406.2.6 More than ten percent heating efficiency improvement. Where equipment exceeds the minimum annual heating efficiency requirements by more than 10 percent, energy efficiency credits for heating may be determined using Equation 4-12b, rounded to the nearest whole number. Where multiple heating performance requirements are provided, the equipment shall exceed the annual energy requirement, including HSPF and COP.

$$EEC_{HEC} = EEC_{10} \times [1 + ((HEI - 10 \text{ percent}) / 10 \text{ percent})] \qquad \text{(Equation 4-12b)}$$

Where:

EEC_{HEC}= energy efficiency credits for heating efficiency improvement

EEC_{10}= C406.2.3 credits from Table C406.1(1)

HEI = the improvement above minimum heating efficiency requirements

Section C406.5.2 Enhanced renewable credit is replaced as shown below, Equation 4-14 and expressions remain except as indicated:

C406.5.2 Enhanced renewable credit. Where the total minimum ratings of on-site renewable energy systems exceed the rating in Section C406.5.1, additional energy efficiency credits shall be determined based on Equation 4-14, rounded to the nearest whole number. The credits shall not exceed the maximum credits indicated in Table C406.1(1).

Expression $AEEC_{2.5}$ in Equation 4-14 is replaced as follows:

$AEEC_{2.5}$ = Section C406.5 credits from Table C406.1(1)

Section C406.8 Enhanced envelope performance is deleted in its entirety and replaced as follows with additional subsections:

C406.8 Enhanced envelope performance. The total UA of the building thermal envelope as designed shall be not less than Section C406.8.1 or C406.8.2.

C406.8.1 Reduced envelope UA. 15 percent below the total UA of the building thermal envelope in accordance with Section C402.1.5.

C406.8.2 Further Reduced envelope UA. 25 percent below the total UA of the building thermal envelope in accordance with Section C402.1.5.

Section C406.9 Reduced air infiltration is deleted in its entirety and as follows with additional subsections:

C406.9 Reduced air infiltration. Air infiltration shall be verified by whole-building pressurization testing conducted in accordance with ASTM E779 or ASTM E1827 by an independent third party. The measured air leakage rate of the building envelope shall be tested under a pressure differential of 0.3 inches water column (75 Pa), with the calculated surface area being the sum of the above- and below-grade building envelope. A report that includes the tested surface area, floor area, air by volume, stories above grade, and leakage rates shall be submitted to the code official and the building owner. *Buildings* shall comply with Section C406.9.1 or C406.9.2.

Exception: For buildings having over 250,000 ft^2 (25 000 m^2) of conditioned floor area, air leakage testing need not be conducted on the whole building where testing is conducted on representative above-grade sections of the building. Tested areas shall total not less than 25 percent of the conditioned floor area and shall be tested in accordance with this section.

C406.9.1 Reduced air infiltration. Air infiltration shall be verified in accordance with Section C406.9. The air leakage shall not exceed 0.25 cfm/ft^2 (2.0 L/s x m^2).

C406.9.2 Further reduced air infiltration. Air infiltration shall be verified in accordance with Section C406.9. The air leakage shall not exceed 0.15 cfm/ft^2 (1.2 L/s x m^2). Credits for this section shall not be combined with credits for Section C406.9.1.

Sections C406.13 through C406.17.2, inclusive, are added as follows:

C406.13 Electric Space Heating. All space heating shall be provided by electric equipment in accordance with this section. The total electric resistance load shall not exceed 5W per square foot of *conditioned floor area* for areas of the *building* served by Variable Air Volume systems and 1.35W per square foot of *conditioned floor* for all other areas of the *building.*

Exceptions:

1. Electric resistance elements integrated into heat pump equipment
2. Supplementary electric resistance heating
3. Electric resistance in heated plenums
4. Electric resistance for freeze protection elements

C406.14 Cold climate heat pump. Space heating equipment shall be heat pumps that comply with the following:

1. Packaged Terminal Heat Pumps and Single Package Vertical Heat Pumps shall have a rated COP of not less than 1.5 when operating at 5°F.
2. All other heat pumps shall have a rated COP of not less than 1.75 when operating at 5°F.
3. The total electric resistance load of the *building* shall not exceed 1.35W per square foot of *conditioned floor area* of the *building* for all other *areas.*

C406.15 Electric water heating. All *service water heating* shall be provided by electric water heating equipment.

C406.16 Demand responsive controls. All thermostatic controls serving the building shall be provided with *demand responsive controls* that serves the *building site.*

C406.17 HVAC system fan power. The total design fan power for all HVAC units shall comply with Section C406.17.1 or C406.17.2.

C406.17.1 Reduced HVAC system fan power. The total design fan power for all HVAC units shall be no less than 10 percent lower than the fan power allowance defined in Table C403.8.1.

C406.17.2 Further reduced HVAC system fan power. The total design fan power for all HVAC units shall be no less than 20 percent lower than the fan power allowance defined in Table C403.8.1, Option 2.

Section C407 Total Building Performance is deleted in its entirety and replaced as follows:

SECTION C407
TOTAL BUILDING PERFORMANCE

C407.1 Scope. This section establishes criteria for demonstrating compliance using total building performance in accordance with option c of section 4.2.1.1 of ANSI/ASHRAE/IESNA 90.1.

1. ANSI/ASHRAE/IESNA 90.1 Appendix G Proposed Building Performance G3.1.5(b) Infiltration shall be replaced in its entirety as follows:
   b. Infiltration shall be modeled using the same methodology and adjustments for weather and building operation in both the proposed design and the baseline building design. These adjustments shall be made for each simulation time step and must account for but not be limited to weather conditions and HVAC system operation, including strategies that are intended to positively pressurize the building. Intermittent HVAC system operation in buildings that can be occupied 24/7 shall be modeled as operating continuously. The air leakage rate of the building envelope (I_{75Pa}) at a fixed building pressure differential of 0.3 in. of water shall be 0.4 cfm/ft^2. The air leakage rate of the building envelope shall be converted to appropriate units for the simulation program using one of the methods in Section G3.1.1.4. Infiltration coefficients for the simulation program shall use DOE-2 Infiltration Methodology: Constant Coefficient (A) is 0, Temperature Coefficient (B) is 0, Wind Speed Coefficient (Linear term) (C) is 0.224, Wind Speed Coefficient (Quadratic term) is 0, Reference Wind Speed is 10 mph.
2. ANSI/ASHRAE/IESNA 90.1 Appendix G Baseline Building Performance G3.1.5(h) Air leakage rate is not changed.
3. Mandatory requirements shall not be included in the baseline building design except as required in Appendix G of ANSI/ASHRAE/IESNA 90.1.

C407.1.1 Additions to existing buildings. When an addition to an existing building cannot comply by itself, trade-offs will be allowed by modification to one or more of the existing components of the existing building. Modeling of the modified components of the existing building and addition shall employ the procedures of Section C407 or Appendix SE. The addition shall not increase the energy consumption of the existing building plus the addition beyond the energy that would be consumed by the existing building plus the addition if the addition alone did comply.

C407.1.2 Alterations to existing buildings. *Alterations* to existing *buildings* shall comply with Section C407 or Appendix SE with the following modifications:

1. The requirements of Section C407.2 shall not be required for unaltered portions of the building.
2. The requirements of C407.2 #4 shall not be required for *alterations.*
3. The *alteration* shall comply with Sections C503.3.2, C503.3.3, C503.4.1, and C503.5.1.
4. The PCI_t required by Section 4.2.1.1 of ANSI/ASHRAE/IESNA 90.1 and $PSEI_t$ required by SE103 shall be permitted to be multiplied by 1.1.

C407.2 Mandatory requirements. In addition to the mandatory requirements identified in section G1.2.1 of Appendix G of ANSI/ASHRAE/IESNA 90.1, *buildings* shall comply with the following:

1. The requirements of the sections indicated within Table C407.2.
2. The *pEUI* of the *proposed design* as calculated in accordance with Appendix G of ANSI/ASHRAE/IESNA 90.1 shall be included in the documentation required by section G1.3.2.
3. Performance modeling utilized to meet the requirements of this section shall be conducted under the supervision of an individual who holds an ASHRAE Building Energy Modeling Professional Certification or *approved* equivalent certification. The name, affiliation and contact information of the modeler who supervised the performance modeling shall be included in the documentation required by section G1.3.2.

4. Roofs, walls, and floors in new *buildings* shall meet applicable maximum U-factor requirements of Table C402.1.5.
5. *Buildings* shall comply with section C402.5, and not section 5.4.3 of ASHRAE 90.1.
6. *Buildings* shall comply with section C405.12, and not section 8.4.3 of ASHRAE 90.1.
7. *Buildings* shall comply with section C408, and not section 4.2.5 of ASHRAE 90.1.

TABLE C407.2

REQUIREMENTS FOR TOTAL BUILDING PERFORMANCE

SECTION	TITLE
C402.5	Air Leakage Testing
C403.1.2	Data Centers
C403.2.3	Fault Detection Diagnostics
C403.2.4	Space Heating Equipment
C403.4.1.1	Heat Pump Supplementary Heat
C404.10	Water Heaters
C404.11	Demand Responsive Water Heating
C404.12	Water Heater Equipment Location
C405.4	Lighting for Plant Growth
C405.13	Electric Vehicle Supply Equipment
C405.14	Solar Access Requirement
C405.15	Electric Infrastructure

C407.3 Compliance based on energy cost. *Buildings* shall comply with option c: Normative Appendix G, "Performance Rating Method" of section 4.2.1.1 of ANSI/ASHRAE/IESNA 90.1 as modified by this section.

C407.3.1 Building performance factors. Table 4.2.1.1 Building Performance Factor (BPF) shall be replaced with Table C407.3.

C407.3.2 Renewable energy. Section 4.2.1.1 of ANSI/ASHRAE/IESNA 90.1 shall be modified as follows:

When $(PBP_{nre} – PBP)/BBP > 0.10$, new *buildings*, *additions* to *existing buildings*, and/or *alterations* to *existing buildings* shall comply with the following:

$$PCI + [(PBP_{nre} – PBP)/BBP] –0.10 < PCI_t \qquad \text{Equation C407.3 - 1}$$

TABLE C407.3

BUILDING PERFORMANCE FACTOR (BPF)

Building Type	***All-electric properties***	**All other *buildings***
Multifamily	0.78	0.57
Healthcare/Hospital	0.70	0.56
Hotel/Motel	0.71	0.51
Office	0.57	0.42
Restaurant	0.63	0.51
Retail	0.49	0.39
School	0.58	0.40
Warehouse	0.29	0.23
All Other	0.58	0.44

SECTION C408
MAINTENANCE INFORMATION AND SYSTEM COMMISSIONING

Section C408.2 Mechanical systems and service water heating systems commissioning, and completion requirements is amended by adding Exception 3 as follows:

Exceptions:

3. Systems in existing buildings where the area of work or the area served is less than 10,000 square feet.

Section C408.2.4 Preliminary commissioning report is replaced in its entirety as follows:

C408.2.4 Preliminary commissioning report. A preliminary report of commissioning test procedures and results shall be completed and certified by the *registered design professional* or *approved agency* and provided to the building owner or owner's authorized agent and to the Agency. The report shall be organized with mechanical, lighting controls, and service hot water findings in separate sections to allow independent review. The report shall be identified as "Preliminary Commissioning Report," shall include the completed Commission Compliance Checklist (see Figure C408.2.4, below) and shall identify:

1. Itemization of deficiencies found during testing required by this section that have not been corrected at the time of report preparation.
2. Deferred tests that cannot be performed at the time of report preparation because of climatic conditions.
3. Climatic conditions require for performance of the deferred tests.
4. Results of functional performance tests.
5. Functional performance test procedures used during the commissioning process including measurable criteria for test acceptance.

Figure C408.2.4 is replaced as follows:

Commissioning Compliance Checklist

Project Information	Project Name:
	Project Address:
	Registered design professional or approved agency who completed commissioning:
Commissioning Plan (Section C408.2.1)	Commissioning Plan was used during construction and includes all items required by Section C408.2.1: (owner or owner representative to initial here)
Systems Adjusting and Balancing (Section C408.2.2)	Systems Adjusting and Balancing has been completed 1. Air and water flow rates have been measured and adjusted to deliver final flow rates within the tolerances provided in the produce specifications.
Functional Testing (Sections C408.2.3 and C408.3.1)	HVAC Equipment Functional Testing has been executed. If applicable, deferred and/or follow-up testing is scheduled to be provided on:__
	HVAC Controls Functional Testing has been executed. If applicable, deferred and/or follow-up testing is scheduled to be provided on:__
	Economizers Functional Testing has been executed. If applicable, deferred and/or follow-up testing is scheduled to be provided on:__
	Lighting Controls Functional Testing has been executed. If applicable, deferred and/or follow-up testing is scheduled to be provided on:__
	Service Water Heating System Functional Testing has been executed. If applicable, deferred and/or follow-up testing is scheduled to be provided on:__
Supporting Documents (Sections C408.2.5)	Manuals, record documents and training have been completed or are scheduled 1. System documentation has been provided to the owner or scheduled to be delivered to the owner on:__ 2. Record documents have been submitted to owner or scheduled to be delivered to the owner on:__ 3. Training has been completed or scheduled to be completed on:__
Preliminary Commissioning Report (Section C408.2.4 and C408.3.2.3.1)	Preliminary Commissioning Report submitted to Owner and includes all items required by Sections C408.2.4 and C408.3.2.3.1 as amended: (owner or owner representative to initial here)
Certification	I hereby certify that the commissioning provider has provided me with evidence of mechanical, service water heating and lighting systems commissioning in accordance with the Denver Energy Code. Signature of Building Owner or Owner's Representative Date

FIGURE C408.2.4

COMMISSIONING COMPLIANCE CHECKLIST

Section C408.2.5.2 Final commissioning report is replaced in its entirety as follows:

C408.2.5.2 Final commissioning report. A report of test procedures and results identified as "Final Commissioning Report" shall be delivered to the building owner or owner's agent. The report shall be organized with mechanical system, lighting controls, and service hot water system findings in separate sections to allow independent review. The report shall include the following:

1. Results of functional performance tests.
2. Disposition of deficiencies found during testing, including details of corrective measures used or proposed.
3. Functional performance test procedures used during the commissioning process including measurable criteria for test acceptance, provided herein for repeatability.

Exception: Deferred tests that cannot be performed at the time of report preparation due to climatic conditions.

Section C408.3 Functional testing of lighting controls is amended by adding the following Exception:

Exception:

New lighting systems are exempt from the functional testing requirements in Section C408.3.1 in buildings where the new installed lighting load is less than 10 kW and the area of work is less than 10,000 square feet.

Section C408.3.2.3 Report is replaced in its entirety as follows:

C408.3.2.3 Reports. The commissioning reports shall be provided as follows:

C408.3.2.3.1 Preliminary commissioning report. A preliminary report of commissioning test procedures and results shall be completed and certified by the *registered design professional* or *approved agency* and provided to the building owner or owner's authorized agent and to the project electrical inspector. The report shall be organized with mechanical, lighting controls, and service hot water findings in separate sections to allow independent review. The report shall be identified as "Preliminary Commissioning Report," shall include the completed Commission Compliance Checklist (see Figure C408.2.4, below) and shall identify:

1. Itemization of deficiencies found during testing required by this section that have not been corrected at the time of report preparation.
2. Results of functional performance tests.
3. Functional performance test procedures used during the commissioning process including measurable criteria for test acceptance.

C408.3.2.3.2 Final commissioning report. A report of test procedures and results identified as "Final Commissioning Report" shall be delivered to the building owner or owner's agent. The report shall be organized with mechanical system, lighting controls, and service hot water system findings in separate sections to allow independent review. The report shall include the following:

1. Results of functional performance tests.
2. Disposition of deficiencies found during testing, including details of corrective measures used or proposed.
3. Functional performance test procedures used during the commissioning process including measurable criteria for test acceptance, provided herein for repeatability.

CHAPTER 5 [CE]
EXISTING BUILDING

SECTION C501
GENERAL

Section C501.2 Compliance is replaced in its entirety as follows:

C501.2 Compliance. *Alterations, repairs, additions*, and changes of occupancy to, or relocation of, existing buildings and structures shall comply with the provisions for *alternations, repairs, additions* and changes of occupancy or relocation, respectively, in this code and the *Denver Commercial Building Code, Denver Fire Code, Denver Fuel and Gas Code, Denver Mechanical Code, Denver Plumbing Code*, and the Electric Code of the City and County of Denver.

Section C501.5 Historic buildings is replaced in its entirety as follows:

C501.5 Historic buildings. No provision of this code relating to the construction, *repair, alteration*, restoration, and movement of structures, and *change of occupancy* shall be mandatory for *historic buildings* provided that one of the following applies:

1. A report has been submitted to the *building official* and signed by a *registered design professional*, demonstrating that compliance with that provision would threaten, degrade, or destroy the contributing historic character or features, or the historic form, materials, or function of the building.
2. The Colorado State Historic Preservation Officer provides a letter to the *building official* with a finding that compliance would conflict with the Secretary of the Interior's Standards for Rehabilitation, outlining the specific provisions that are in conflict and how compliance would threaten, degrade, or destroy the contributing historic character or features, or the historic form, materials, or function of the building.
3. The Denver Landmark Preservation Commission or Lower Downtown Design Review Commission provides documentation to the *building official* with a finding that compliance with that provision would conflict with locally adopted historic preservation policies, standards, and guidelines, outlining the specific provisions that are in conflict and how compliance would threaten, degrade, or destroy the historic character or features, or the historic form, materials, or function of the building.

~~**SECTION C502**~~
~~**ADDITIONS**~~

~~**Section C502.3 Compliance is amended by replacing the sentence as follows:**~~

~~*Additions* shall comply with Sections C502.3.1 through C502.3.6.2, or shall comply with Section C407.~~

SECTION C503
ALTERATIONS

Section C503.1.1 Alteration compliance (performance option) is added as follows:

C503.1.1 Alteration compliance (performance option). Where *alterations* do not result in a change of occupancy or space conditioning per C505.1 or C502.2, the building shall comply with this code if the annual energy cost or energy use of the *alterations* that are part of the project is less than or equal to the annual energy cost or energy use of the existing *building* when modeled in accordance with Section C407.1.2, with the following changes:

1. Systems and building components that are not part of the alteration shall be modeled identically in both baseline and proposed models.
2. Unaltered spaces may be excluded from the models if the energy use of the space is not impacted by the scope of the alterations.
3. Where existing conditions are unknown for the spaces and systems the alterations affect, C407 shall be used to determine baseline.
4. Where existing conditions are known for the spaces and systems the alterations affect, they shall be modeled as such in the baseline.
5. Where existing conditions are unknown and unaltered, C407 shall be used to determine baseline and proposed conditions.
6. Where the alterations include envelope improvements, the baseline building shall represent existing conditions prior to the alterations.
7. Alterations are not subject to the mandatory requirements of C407.2 except where outlined in C503.

Section C503.2.1 Roof replacement is amended by adding an exception:

Exception: Where increasing the thickness of above deck insulation would result in existing exterior wall openings becoming less compliant with the *Denver Commercial Building Code*, increased insulation to the maximum extent feasible shall be considered in compliance with Section C402.1.4.

Effective March 1st, 2023: Permit applications submitted to the Agency after March 1st, 2023, shall comply with section C503.3.2.

Section C503.3.2 Low-Nitrogen Emissions is added as follows:

C503.3.2 Low-Nitrogen Emissions. Where an indoor gas-fired warm air furnace is replaced with another gas-fired warm air furnace, the new furnace shall meet one of the following:

1. Low-nitrogen dioxide emissions shall not exceed 14 nanograms of nitrogen dioxide per joule of useful heat delivered to the heated space.
2. An Annual Fuel Utilization Efficiency of not less than 90 percent.

Exception: Indoor gas-fired make-up air units are not required to comply with this section.

Effective March 1st, 2023: Permit applications submitted to the Agency after March 1st, 2023, shall comply with section C503.3.3.

C503.3.3 Partial electrification for space heating requirements is added as follows:

C503.3.3 Partial electrification for space heating requirements. Where a gas-fired warm-air furnace is replaced with a gas-fired warm-air furnace, two of the following are required; when a unitary air conditioner or condensing unit serving a heated space is replaced with another unitary air conditioner or condensing unit, one of the following is required:

1. An *Electrification Retrofit Feasibility Report*.
2. The equipment shall be sized per Section C403.3.1.
3. All gas piping connected to the gas meter serving the replaced warm-air furnace shall be tested per Section 406 of the IFGC.

Exceptions:

1. This section shall not apply when equipment is replaced as an *emergency equipment replacement*.
2. This section shall not apply to the replacement of gas-fired boilers used for space heating.
3. This section shall not apply to the replacement of package terminal air conditioners (PTACs) or vertical terminal air conditioners (VTACs).

Effective March 1st, 2023: Permit applications submitted to the Agency after March 1st, 2023, shall comply with section C503.4.1.

Section C503.4.1 Electrification for service water heating requirements is added as follows:

C503.4.1 Electrification for service water heating requirements. Where a gas-fired storage water heater or instantaneous water heater is replaced with another gas-fired storage water heater or instantaneous water heater, one of the following is required:

1. Provide an *Electrification Retrofit Feasibility Report.*
2. All gas piping connected to the gas meter serving the replaced gas-fired water heater shall be tested per Section 406 of the IFGC.

Exceptions:

1. This section shall not apply when equipment is replaced *as an emergency equipment replacement.*
2. This section shall not apply to the replacement of gas-fired boilers used for water heating.

Section C503.5.1 Lighting acceptance testing is added as follows:

C503.5.1 Lighting acceptance testing. New lighting systems that serve *alterations* shall comply with Section C408.3.

Exception: The new installed lighting load is less than 10 kW, and the work area is less than 10,000 sq. ft.

Section C503.5.2 Lighting systems for plant growth vegetation areas is added as follows:

C503.5.2 Lighting systems for plant growth vegetation areas. New lighting installed in new canopy areas (areas used for plant growth and plant maintenance) as part of an expansion of operations or change of use within an existing building shall comply with Section C405.4.

Exceptions:

1. Replacement luminaires in existing plant growth and maintenance areas.
2. New lighting in new canopy areas where the building ceiling height is 9 feet or less.

SECTION C505
CHANGE OF OCCUPANCY OR USE

Section C505.1 General is deleted in its entirety and replaced as follows:

C505.1 General. Spaces undergoing a change in occupancy to a higher energy-demand category (higher number) as shown in Table C505.1 shall comply with the requirements of this code's sections C402, C403, C404, C405, and C408. Where the space undergoing a change in occupancy or use is in a building with a fenestration area that exceeds the limitations of Section C402.4.1, the space is exempt from Section C402.4.1 provided there is not an increase in fenestration area.

Exceptions:

1. Where it is calculated that the change in occupancy or the alterations (Section C503) will not result in an increase in demand for fossil fuel and electrical energy, the space shall comply with the requirements of this code for *alterations*.
2. Where the component performance alternative in Section C402.1.5 is used to comply with this section, the proposed UA shall be not greater than 110 percent of the target UA.
3. Where the space undergoing a change in occupancy complies with C407.1.2.

Table C505.1 Energy-demand categories is added as follows:

TABLE C505.1
ENERGY-DEMAND CATEGORIES

ENERGY-DEMAND CATEGORY	IBC OCCUPANCIES	IRC USES
4 (highest energy-demand)	A, B small assembly space	
3	B gym, E, I-4, M	
2	B (except as listed above), I-1, I-2, I-3, R	All uses permitted in IRC structures
1 (lowest energy-demand)	F, H, S	Accessory structures

CHAPTER 6 [CE]
REFERENCED STANDARDS

The following referenced standards are added as follows:

CTA

1919 South Eads Street
Arlington, VA 22202

2045—Modular Communications Interface for Energy Management

ASME

Two Park Avenue
New York, NY 10016-5990
(800) 843-2763;
https://www.asme.org

BPVC—Boiler and Pressure Vessel Code

ASABE

2950 Niles Road
St. Joseph, MI 49085
www.asabe.org

S642- SEP2018— Recommended Methods for Measurement and Testing of LED Products for Plant Growth And Development

IES

120 Wall Street, 17th Floor
New York, NY 10005-4001
www.ies.org

LM-79-19—Optical And Electrical Measurements of Solid-State Lighting Products

LM-51-20—Electrical and Photometric Measurement of High Intensity Discharge Lamps

IESNA Lighting Handbook – 10th edition (2011)

ASHRAE

180 Technology Parkway NW
Peachtree Corners, GA 30092

90.4-2019: Energy Standard for Data Centers,

DOE

1000 Independence Avenue SW
Washington, DC 20585

10 CFR Part 430, Subpart B - Appendix X – (2018): Uniform Test Method for Measuring the Energy Consumption of Dehumidifiers

Appendix CB Solar-ready zone—commercial is adopted with the following amendments:

APPENDIX CB
SOLAR-READY ZONE—COMMERCIAL

SECTION CB103
SOLAR-READY ZONE

Section CB103.1 General is replaced as follows:

CB103.1 General. A *solar-ready zone* shall be located on the roof of buildings that are five stories or less in height above grade plane and are oriented between 110 degrees and 270 degrees of true north or have low-slope roofs. *Solar-ready zones* shall comply with Sections CB103.2 through CB103.9.

Exceptions:

1. A building with a permanently installed, on-site renewable energy system with existing capacity that is at a minimum the greater of 1 W/sf of roof area and 5 kW DC.
2. A building with a solar-ready zone that is shaded for more than 70 percent of daylight hours annually.
3. A building where the licensed design professional certifies that the incident solar radiation available to the building is not suitable for a solar-ready zone.

Section CB103.3 Solar-ready zone area is replaced as follows:

CB103.3 Solar-ready zone area. The total *solar-ready zone* area shall be not less than 60 percent of the roof area calculated as the horizontally projected gross roof area less the area covered by skylights, occupied roof decks, vegetative roof areas and mandatory access or set back areas as required by the Denver Fire Code. The *solar-ready zone* shall be a single area or smaller, separated sub-zone areas. Each sub-zone shall be not less than 5 feet (1524 mm) in width in the narrowest dimension.

Exception:

A building where the licensed design professional certifies that a portion of the solar zone area required by Section CB103.3 cannot be met because of extensive rooftop equipment, skylights, vegetative roof areas or other obstructions.

Section CB103.4 Obstructions is replaced as follows:

CB103.4 Obstructions. No obstructions, including but not limited to, vents, chimneys, HVAC equipment, skylights, architectural features, and roof-mounted equipment, shall be located in or impact the solar zone. Any obstruction, located on the roof or any other part of the building that projects above a solar zone shall be located two times the height of the obstruction from the closest edge of the solar zone.

Exceptions:

1. Any roof obstruction, located on the roof or any other part of the building, that is oriented north of all points on the solar zone.
2. Equipment designated for solar water heating systems, if present, are permitted to be installed in the solar zone.

Section CB103.8 Electrical service reserved space is replaced as follows:

CB103.8 Electrical service or distribution reserved space. Provide for reserved spaces in the electrical service or distribution system to allow for installation of a two-pole or three-pole circuit breaker or disconnect switch for an interconnection to a future solar electric system and a two-pole or three-pole circuit breaker or disconnect switch for an interconnection to a future electrical energy storage system. These spaces shall be labeled "For Future Solar Electric System" and "For Future Energy Storage System" respectively. The reserved spaces shall allow for compliance with the requirements of National Electrical Code (NEC) 705.

Appendix PT Modeling to a Performance Target is added as follows:

APPENDIX PT

Modeling to a Performance Target

PT101 Scope. This section establishes criteria for demonstrating compliance utilizing a modeled performance target.

PT102 Mandatory requirements. *Buildings* complying with this appendix shall comply with section C407.2.

PT103 Modeled Performance target. Projects of the types listed in Table PT103 shall be permitted to demonstrate compliance based on a modeled performance target. The modeled performance target shall be calculated in accordance with this appendix. The *pEUI* of the *building* shall be less than or equal to the values in Table PT103. For *buildings* with multiple occupancy types, the modeled performance target shall be a weighted average of the floor area of each occupancy type.

PT103.1 Modeling procedures. The *pEUI* of the proposed design shall be calculated utilizing the energy modeling procedures of Appendix G of ASHRAE 90.1 for proposed building performance as modified by the "Denver Modeling Rules and Procedures" document available from the Agency through the adoption of rules and regulations.

TABLE PT103
MODELED PERFORMANCE TARGETS

Building Type	Modeled Performance Target (kBtu/sf/yr)
Apartment (Multi-family)	38
Hotel (Motel)	55
Office	43
Retail	39
Restaurant/Bar	175
Parking garages	3

PT104 Documentation. Permit submittals shall include a report documenting that the proposed design has annual energy use less than or equal to the energy target required in Section PT103.1. The compliance documentation shall include the information identified in the *Denver Modeling Rules and Procedures*.

PT105 Renewable Energy. The reduction in energy of the proposed design associated with on-site renewable energy is limited to 10% when complying with Appendix PT.

PT106 Excluded Energy Use. Energy used for data centers and EV charging equipment shall be permitted to be excluded from the total *pEUI* of the building provided the load is metered separately from the rest of the *building* loads.

Appendix SE is added as follows:

APPENDIX SE
TOTAL BUILDING PERFORMANCE WITH SITE ENERGY

SE101 Scope. This section establishes criteria for demonstrating compliance using total building performance utilizing site energy in accordance with option c of section 4.2.1.1 of ANSI/ASHRAE/IESNA 90.1.

SE102 Mandatory requirements. *Buildings* complying with this appendix shall comply with section C407.2.

SE103 Compliance based on site energy. *Buildings* shall comply with option c: Normative Appendix G, "Performance Rating Method" of section 4.2.1.1 of ANSI/ASHRAE/IESNA 90.1 as modified by this section.

SE103.1 Terms. For the purposes of compliance with this appendix, terminology in ANSI/ASHRAE/IESNA 90.1 shall be modified as follows:

1. Replace references to energy cost with references to site energy in Sections G1.2.2, G1.3.2, G2.1, G2.5 and G2.4.2 section heading.
2. *Baseline building performance* shall be defined as "the annual site *energy* for a *building* design intended for use as a baseline for rating above-standard design or when using the *Performance Rating Method* as an alternative path for minimum standard compliance in accordance with Section 4.2.1.1."
3. *Proposed building performance* shall be defined as **"**the annual site *energy* calculated for a *proposed design*."

SE103.2 Section 4.2.1.1. Section 4.2.1.1 is replaced with the following:

Buildings shall comply with the provisions of Appendix G of ANSI/ASHRAE/IESNA 90.1, "Performance Rating Method." The Performance Site Energy Index (PSEI) shall be less than or equal to the Performance Site Energy Index Target ($PSEI_t$) when calculated in accordance with the following:

$$PSEI_t = [BBUSE + (BPF \times BBRSE)] / BBPSE \qquad \text{Equation SE103 - 1}$$

where

PSEI = Performance Site Energy Index calculated in accordance with section G1.2.

BBUSE = baseline *building* unregulated site energy, the portion of the annual site energy of a baseline building design that is due to unregulated energy use.

BBRSE = baseline *building* regulated site energy, the portion of the annual site energy of a baseline building design that is due to regulated energy use.

BPF = *building* performance factor from table SE103.2. for building area types not listed in table SE103.2 use "all others." where a building has multiple building area types, the required BPF shall be equal to the area-weighted average of the building area types.

BBPSE = baseline *building* performance site energy

PBPSE = *proposed building performance site energy*, including the reduced, annual purchased site *energy* associated with all *on-site renewable energy* generation systems.

$PBPSEn_{re}$ = *proposed building performance site energy* without any credit for reduced annual *energy* from *on-site renewable energy* generation systems.

When (PBPSEn*re* – PBPSE)/BBPSE > 0.10, new *buildings*, *additions* to *existing buildings*, and/or *alterations* to *existing buildings* shall comply with the following:

$$PSEI + [(PBPSEnre - PBPSE)/BBPSE] - 0.10 < PSEIt \qquad \text{Equation SE103 - 2}$$

SE103.3 Building performance factors. Table 4.2.1.1 Building Performance Factor (BPF) shall be replaced with Table SE103.3.

TABLE SE103.3
BUILDING PERFORMANCE FACTOR (BPF)

Building Type	***All-electric properties***	**All other *buildings***
Multifamily	0.71	0.60
Healthcare/Hospital	0.73	0.62
Hotel/Motel	0.70	0.59
Office	0.59	0.51
Restaurant	0.75	0.63
Retail	0.58	0.48
School	0.69	0.58
Warehouse	0.40	0.33
All Other	0.64	0.54

SE103.5 Section G1.2.2. Section G1.2.2 shall be replaced with the following:

The performance of the *proposed design* is calculated in accordance with provisions of this appendix using the following formula:

Performance Site *Energy* Index = *Proposed building performance/Baseline building performance*

Both the *proposed building performance* and the *baseline building performance* shall include all end-use load components within and associated with the *building* when calculating the Performance Site *Energy* Index.

SE103.6 Section G1.3.2. Item a. in Section G1.3.2 shall be replaced, and item r. added as follows:

a. The following documentation shall be submitted to the rating authority: The *simulation program* used, the version of the *simulation program*, and the results of the *energy* analysis including the calculated values for the baseline *building* unregulated site *energy* (BBUSE), baseline *building* regulated site *energy* (BBRSE), *Building* Performance Factor (BPF), *baseline building performance*, the *proposed building performance*, Performance Site *Energy* Index (PSEI), and Performance Site *Energy* Index Target (PSEIt).

r. For any exceptional calculation methods employed, document the predicted *energy* savings by *energy* type, the site *energy* savings, a narrative explaining the exceptional calculation method performed, and theoretical or empirical information supporting the accuracy of the method.

SE103.7 Section G2.4.2. Section G2.4.2 shall be renamed "Annual Site Energy." The informative note for sections G2.4.2 and G2.4.2.2 shall be removed. The first sentence in section G2.4.2. shall be replaced with the following:

Site energy shall be calculated in accordance with the following:

1. 3,412 Btu per kWh of electricity
2. 100,000 Btu per therm of natural gas

SE103.8 Section G2.5. Section G2.5, item e. is replaced with the following:

e. The Performance Site *Energy* Index calculated with and without the exceptional calculation method.

ENERGY CODE RESIDENTIAL PROVISIONS

CHAPTER 1 [RE]
SCOPE AND ADMINISTRATION

PART 1 – SCOPE AND APPLICATION

SECTION R101
SCOPE AND GENERAL REQUIREMENTS

Section R101.1 Title is replaced in its entirety as follows:

R101.1 Title. These regulations shall be known as the Denver Energy Code and shall be cited as such. It is referred to herein as "this code".

Section R103.2 Information on Construction documents number 10 is added as follows:

10. Total area of glazed *vertical fenestration* as a percentage of conditioned floor area.

Section R103.2.2 Energy compliance, is added as follows:

R103.2.2 Energy compliance. The Building Official is authorized to require additional documentation through written policy to ensure compliance with the *Denver Energy Code*.

Section R105.2 Required inspections revised as follows:

R105.2 Required inspections. The *code official* or his or her designated agent, upon notification, shall make the inspections, and shall report the result of inspections, set forth in Sections R105.2.1 through R105.2.5, to verify compliance with the requirements of this code.

Section 105.2.5 Final inspection is modified by adding subsection R105.2.5.1 Final inspection reporting:

R105.2.5.1 Final inspection reporting. Reporting needed for certificate of occupancy in addition to what may be called for within a specific compliance path. Blower door and duct leakage testing results, Section R401.3 certificate, approved third party reports as required.

Section R105.4 Approved third party inspection agencies is revised and added to as follows:

R105.4 Approved third-party inspection agencies. The Agency is authorized to accept reports of third-party inspection agencies not affiliated with the *building* construction, provided that such agencies are *approved* as to qualifications and reliability relevant to the *building* components and systems that they are inspecting or testing.

R105.4.1 Third-Party Credentials. *Approved* third-party inspector shall be an accredited RESNET HERS Rater, BPI Building Analyst, IECC/HERS compliance specialist, or have IECC residential energy inspector/plans examiner certification.

R105.4.2 Approved third-party inspections reporting. The *approved* agency shall submit rough and final inspection reports to the code official and to the owner's representative in accordance with Section R105.2 and R105.4.

Sections R103.3 through R104, R106, and R108 through R109 are deleted in their entirety. Section 1 of the 2022 Denver Building Code shall govern.

CHAPTER 2 [RE]
DEFINITIONS

Section R201.3 Terms defined in other codes is deleted and replaced as follows:

R201.3 Terms defined in other codes. Terms that are not defined in this code but are defined in the Denver Commercial Building Code, the Denver Fire Code, the Denver Fuel Gas Code, the Denver Mechanical Code, the Denver Plumbing Code, or the Denver Residential Code shall have the meanings given to them in those codes.

SECTION R202
GENERAL DEFINITIONS

The following definitions are amended or added as follows:

ALL-ELECTRIC RESIDENTIAL BUILDING. A building that has no *fuel- gas* or propane plumbing combustion equipment installed in or out of the building, and that uses electricity as the sole source of energy for its space heating and cooling, water heating (including pools and spas), cooking appliances, and clothes dryer appliances. All-electric buildings may include any or all sources of on-site renewable energy

ALL-ELECTRIC PROPERTY.
A property on a single assessment parcel with an accompanying legally described area of land as shown on a site plan, that, except for *emergency power systems* and *standby power systems*:
1) Contains no permanently installed equipment or appliances that utilize *combustion*, plumbing for *fuel gas* or fuel oil, or fuel gas utility connection installed within the *building(s)* or *site*; or,
2) Contains at least one new stand-alone all-electric building where the property includes existing *fuel gas* or fuel oil infrastructure built under a code effective prior to May 1, 2023.

CODE OFFICIAL. The building official as created in Chapter 1 of the Denver Building Code, Sec. 102.2

COMBUSTION. In the context of this code, refers to the rapid oxidation of fuel accompanied by the production of heat or heat and light.

DEMAND RESPONSE SIGNAL. A signal that indicates a price or a request to modify electricity consumption for a limited time period.

DEMAND RESPONSIVE CONTROL. A control capable of receiving and automatically responding to a *demand response signal*.

ELECTRIC VEHICLE (EV). An automotive-type vehicle for on-road use, such as passenger automobiles, buses, trucks, vans, neighborhood electric vehicles, and electric motorcycles, primarily powered by an electric motor that draws current from a building electrical service, EVSE, a rechargeable storage battery, a fuel cell, a photovoltaic array, or another source of electric current.

ELECTRIC VEHICLE SUPPLY EQUIPMENT (EVSE). Equipment for plug-in power transfer including the ungrounded, grounded and equipment grounding conductors, and the *electric vehicle* connectors, attachment plugs, personal protection system and all other fittings, devices, power outlets or apparatus installed specifically for the purpose of transferring energy between the premises wiring and the *electric vehicle*.

ELECTRIC VEHICLE READY SPACE (EV READY SPACE). An *automobile parking space* that is provided with a branch circuit and either an outlet, junction box or receptacle, that will support an installed *EVSE*.

EMERGENCY POWER SYSTEM. A source of automatic electric power of a required capacity and duration to operate required life safety, fire alarm, detection and ventilation systems in the event of a failure of the primary power. Emergency power systems are required for electrical loads where interruption of the primary power could result in loss of human life or serious injuries.

LEVEL 3 ALTERATION. Alterations where the work area exceeds 50 percent of the original building area or more than 10 parking spaces are substantially modified.

LOW-SLOPED ROOF. A roof having a slope less than 2units vertical in 12 units horizontal.

ON-SITE PARKING SPACE. Interior or exterior area on the *lot* with minimum dimensions of 8.5-feet by 17.5-feet provided with an all-weather surface of asphalt, asphaltic concrete, concrete, crushed aggregate, or similar material and accessible by a vehicle from a *public way.*

RESIDENTIAL BUILDING. For this code, includes detached one- and two-family dwellings and multiple single-family dwellings (townhouses) and Group R-3 and R-4 buildings three stories or less in height above grade plane.

SOLAR READY ZONE. A section or sections of the roof or building designated and reserved for the future installation of a solar photovoltaic or solar thermal system.

STANDBY POWER SYSTEM. A source of automatic electric power of a required capacity and duration to operate required building, hazardous materials, or ventilation systems in the event of a failure of the primary power. Standby power systems are required for electrical loads where interruption of the primary power could create hazards or hamper rescue or fire-fighting operations.

TOWNHOUSE. A single-family *dwelling unit* constructed in a group of three or more attached units in which each unit extends from foundation to roof and has a *yard* or public way on the full length of one of the four principal sides and has a *yard* or public way on at least 50% of the length of another principal side.

CHAPTER 3 [RE]
GENERAL REQUIREMENTS

SECTION R302
DESIGN CONDITIONS

Section R302.1 Interior design conditions is replaced as follows:

R302.1 Interior design conditions. The interior design temperatures used for heating and cooling load calculations shall be a maximum of 70°F (21°C) for heating and minimum of 75°F (24°C) for cooling.

SECTION R303
MATERIALS, SYSTEMS AND EQUIPMENT

Section R303.2 Installation is replaced as follows, subordinate sections to remain:

R303.2 Installation. Materials, systems, and equipment shall be installed in accordance with the manufacturer's instructions. Insulation shall be to minimum Grade I installation in accordance with RESNET/ICC 301 and the *Denver Commercial Building Code* or the *Denver Residential Code*, as applicable.

CHAPTER 4 [RE]
RESIDENTIAL ENERGY EFFICIENCY

SECTION R401
SCOPE AND GENERAL REQUIREMENTS

Section R401.2 Application is replaced as follows (other subsections remain unchanged except as shown below):

R401.2 Application. Residential buildings shall comply with Sections R401.2.1, R401.2.2, or R401.2.3.

Exception: Additions, alterations, repairs, and changes of occupancy to existing buildings complying with Chapter 5.

Section R401.2.1 Prescriptive Compliance Option is replaced as follows:

R401.2.1 Prescriptive Compliance Option. The Prescriptive Compliance Option requires compliance with Sections R401 through R404, and Section R408

Section R401.2.5 Additional Energy Efficiency is deleted in its entirety.

Section R401.3 Certificate is modified to substitute the term "space conditioning equipment" for "furnace", (the remainder of Section R401.3 is unchanged):

R401.3 Certificate. A permanent certificate shall be completed by the builder or other *approved* party and posted on a wall in the space where the space conditioning equipment is located, a utility room or an *approved* location inside the *building*. Where located on an electrical panel, the certificate shall not cover or obstruct the visibility of the circuit directory *label*, service disconnect *label* or other required labels. The certificate shall indicate the following and shall be posted for review by the time of the project's final inspection:

Section R401.4 Homeowner manual is added:

Section R401.4 Homeowner manual. The builder or owner's agent shall provide the owner with a binder of all equipment and appliance manufacturers' installation manuals, except for manuals that are required to be affixed to the equipment, and any information required to be included on the permanent certificate in accordance with R401.3. This includes any energy assessment report and/or ERI certificate.

SECTION R402
BUILDING THERMAL ENVELOPE

Section R402.1.1 Vapor retarder is replaced as follows:

Section R402.1.1 Vapor retarder. Wall assemblies in the *building thermal envelope* shall comply with the vapor retarder requirements of Section R702.7 of the *Denver Residential Code* or Section 1404.3 of the *Denver Commercial Building Code*, as applicable.

Table R402.1.2 MAXIMUM ASSEMBLY U-FACTORS [a] AND FENESTRATION REQUIREMENTS and footnotes is replaced as follows:

TABLE R402.1.2
MAXIMUM ASSEMBLY *U*-FACTORS[a] AND FENESTRATION REQUIREMENTS

CLIMATE ZONE	FENESTRATION *U*-FACTOR[f]	SKYLIGHT *U*-FACTOR	GLAZED FENESTRATION SHGC[d,]	CEILING *U*-FACTOR	WOOD FRAME WALL *U*-FACTOR	MASS WALL *U*-FACTOR[b]	FLOOR *U*-FACTOR	BASEMENT WALL *U*-FACTOR	CRAWL SPACE WALL *U*-FACTOR
5	0.27 / 0.25	0.45	0.40	0.024	0.045	0.082	0.026	0.050	0.055

For SI: 1 foot = 304.8 mm.

a. Non-fenestration *U*-factors shall be obtained from measurement, calculation, or an approved source.
b. Mass walls shall be in accordance with Section R402.2.5. Where more than half the insulation is on the interior, the mass wall *U*-factors shall not exceed 0.065 in Climate Zone 5.
c. Reserved.
d. The SHGC column applies to all glazed fenestrations.
e. Reserved.
f. Where the proposed glazing area is greater than or equal to 15.0% of the conditioned floor area, as provided by Section R103.2, the lower U-factor shall not be exceeded.

Table R402.1.3
INSULATION MINIMUM R-VALUES AND FENESTRATION REQUIREMENTS BY COMPONENT

CLIMATE ZONE	FENESTRATION *U*-FACTOR[b]	SKYLIGHT[b] *U*-FACTOR	GLAZED FENESTRATION SHGC[b,]	CEILING *R*-VALUE	WOOD FRAME WALL *R*-VALUE[e]	MASS WALL *R*-VALUE[f]	FLOOR *R*-VALUE	BASEMENT[c,e] WALL *R*-VALUE	SLAB[d] *R*-VALUE & DEPTH	CRAWL SPACE[c,e] WALL *R*-VALUE
5	0.27 / 0.25[g]	0.45	0.40	60	30 or 20 & 5ci or 13&10ci or 0 & 20ci	13/17	38	15ci or 19 or 13 & 5ci	10ci, 4 ft	15ci or 19 or 13 & 5ci

For SI 1foot = 304.8mmci = continuous insulation

a. *R*-values are minimums. *U*-factors and SHGC are maximums. Where insulation is installed in a cavity that is less than the label or design thickness of the insulation, the installed *R*-value of the insulation shall be not less than the *R*-value specified in the table.

b. The fenestration *U*-factor column excludes skylights. The SHGC column applies to all glazed fenestration except for that specifically used for passive solar design heat gain which is exempt.

c. "15ci or 19 or 13 + 5ci" means R-15 continuous insulation (ci) on the interior or exterior surface of the wall; or R-19 cavity insulation on the interior side of the wall; or R-13 cavity insulation on the interior of the wall in addition to R-5 continuous insulation on the interior or exterior surface of the wall.

d. R-10 insulation shall be provided under the full slab area of a heated slab in addition to the required slab edge insulation *R*-value for slabs. as indicated in the table. Slab edge insulation shall be installed to separate conditioned from unconditioned spaces including adjacent garages, entries, and porches. The slab-edge insulation for heated slabs shall not be required to extend below the slab.

e. The first value is cavity insulation; the second value is continuous insulation. Therefore, as an example, "20 & 5" means R-20 cavity insulation plus R-5 continuous insulation.

f. Mass walls shall be in accordance with Section R402.2.5. The second *R*-value applies where more than half of the insulation is on the interior of the mass wall.

g. Where the proposed glazing area is greater than or equal to 15.0% of the conditioned floor area, as provided by Section R103.2, the lower U-factor shall not be exceeded.

Section R402.2.8 Basement walls is modified as follows (exceptions remain unchanged):

R402.2.8 Basement walls. Basement walls shall be insulated in accordance with Table R402.1.2 or Table R402.1.3 or the installed R-value shall be in accordance with the compliance path that is defined at the time of obtaining the building permit.

Section R402.2.8.1 Basement wall insulation installation is added:

R402.2.8.1 Basement wall insulation installation. Where basement walls enclosing conditioned basements are insulated, the insulation shall comply with the following:

1. Where exterior basement wall insulation is installed, it shall be permanently attached to the wall and extend from the sill plate downward to not less than the top of the footing or 10 feet, whichever is less.
2. Where interior basement wall insulation is installed, it shall extend from the sill plate at the top of the foundation wall downward to the finished floor or subfloor below.

Section R402.2.10. Crawl space walls and R402.2.10.1 Crawl space wall insulation installation is revised as follows:

R402.2.10 Crawl space walls. Crawl space walls shall be insulated in accordance with Table R402.1.2 or Table R402.1.3 or the installed R-value shall be in accordance with the compliance path that is defined at the time of obtaining the building permit.

Exception: Crawl space walls associated with a crawl space that is vented to the outdoors and the floor overhead is insulated in accordance with Table R402.1.3 and Section R402.2.7.

R402.2.10.1 Crawl space wall insulation installations. Where crawl space wall insulation is installed, it shall comply with the following:

1. Where exterior crawl space wall insulation is installed, it shall be permanently attached to the foundation and extend from the sill plate downward to the top of the footing.
2. Where interior crawl space wall insulation is installed, it shall be permanently attached to the foundation wall and extend from the sill plate at the top of the foundation wall downward to the finished floor or subfloor of the crawlspace.

Exposed earth in crawl space foundations shall be covered with a continuous Class I vapor retarder in accordance with the *Denver Commercial Building Code* or the *Denver Residential Code*, as applicable. Joints of the vapor retarder shall overlap by 6 inches (153 mm) and be sealed or taped. The edges of the vapor retarder shall extend not less than 6 inches (153 mm) up stem walls and shall be attached to the stem walls.

TABLE R402.4.1.1 AIR BARRIER, AIR SEALING AND INSULATION INSTALLATION is replaced in its entirety as follows:

TABLE R402.4.1.1 AIR BARRIER, AIR SEALING AND INSULATION INSTALLATION[a]

Component	AIR BARRIER, AIR SEALING CRITERIA	Insulation Installation
General requirements	A continuous air barrier shall be installed in the building envelope. Breaks or joints in the air barrier shall be sealed.	Air-permeable insulation shall not be used as a sealing material.
Ceiling/attic	A sealed air barrier shall be installed in any dropped ceiling or soffit to separate it from unconditioned space. Access openings, drop downstairs or knee wall doors to unconditioned attic spaces shall be air sealed with gasketing materials that allow for repeated entrance over time.	The insulation in any dropped ceiling/soffit shall be aligned with the air barrier. Access hatches and doors shall be installed and insulated in accordance with Section R402.2.4 Eave Baffles shall be installed in accordance with Section R402.2.3
Above Grade Walls	The junction of the foundation and sill plate shall be air sealed. The junction of top plates and drywall adjacent to unconditioned space shall be air sealed. The junction of the bottom plate to the subfloor on exterior walls separating conditioned space from unconditioned space shall be air sealed.	Air permeable insulation installed in wall cavities shall be enclosed. Building thermal envelope insulation for framed walls shall be installed in substantial contact and continuous alignment with the air barrier. Corners in exterior frame walls shall be insulated with material having a thermal resistance, R-value, of not less than R-3 per inch. Headers on exterior walls shall be insulated to a minimum R-5.

Windows, skylights and doors	The space between framing and skylights, and the jambs of windows and doors, shall be air sealed.	Insulation installed in framing around windows, skylights and doors shall be cut to fit the cavity and shall not interfere with flashing or drainage of the installed window.
Rim joists	Rim joists shall include an exterior air barrier[b]. The junctions of the rim board to the sill plate and the rim board and the subfloor shall be air sealed.	Rim joists shall be insulated so that the insulation maintains permanent contact with the exterior rim board.[b]
Floors, separating conditioned from unconditioned space, including cantilevered floors and floors above garages	The air barrier shall be installed, and air sealed to maintain continuity at exposed edges of the insulated floor cavity.	Air permeable insulation installed in floor cavities shall be enclosed. Floor framing cavity insulation shall be installed in accordance with the requirements of Section R402.2.7.
Basement crawl space and slab foundations	Exposed earth in unvented crawl spaces shall be covered with a Class I vapor retarder/air barrier in accordance with Section R402.2.10. Penetrations through concrete foundation walls and slabs shall be air sealed. Class 1 vapor retarders shall not be used as an air barrier on below-grade concrete walls and shall be installed in accordance with Section R702.7 of the Denver Residential Code.	Crawl space insulation, where provided instead of floor insulation, shall be installed in accordance with Section R402.2.10. Conditioned basement foundation wall insulation shall be installed in accordance with Section R402.2.8.1. Slab-on-grade floor insulation shall be installed in accordance with Section R402.2.9 Slab-on-grade floors.
Shafts, penetrations	Duct and flue shafts to exterior or unconditioned space shall be sealed. Utility penetrations of the air barrier shall be caulked, gasketed or otherwise sealed and shall allow for expansion, contraction of materials and mechanical vibration.	Insulation shall be fitted tightly around utilities passing through shafts and penetrations in the building thermal envelope to maintain required R-value.
Narrow cavities	Narrow cavities of 1 inch or less that are not able to be insulated shall be air sealed.	Batts to be installed in narrow cavities shall be cut to fit or narrow cavities shall be filled with insulation that on installation readily conforms to the available cavity space.
Garage separation	Air sealing shall be provided between the garage and conditioned spaces.	Insulated portions of the garage separation assembly shall be installed in accordance with Sections R303 and R402.2.7.
Recessed lighting	Recessed light fixtures installed in the building thermal envelope shall be air sealed in accordance with Section R402.4.5.	Recessed light fixtures installed in the building thermal envelope shall be airtight and IC rated, and shall be buried or surrounded with insulation.

Plumbing, wiring or other obstructions	All holes created by wiring, plumbing or other obstructions in the air barrier assembly shall be air sealed.	Insulation shall be installed to fill the available space and surround wiring, plumbing, or other obstructions, unless the required R-value can be met by installing insulation and air barrier systems completely to the exterior side of the obstructions.
Shower, tub, and fireplaces on exterior walls	An air barrier shall be installed to separate the exterior insulated framed wall from showers, tubs, and fireplaces. Tub and shower drain trap penetrations through the subfloor shall be air sealed. Fireplace doors shall have tight fitting flue dampers or doors and shall be listed in accordance with of R402.4.2	Exterior framed walls adjacent to showers, tubs, and fireplace shall be insulated.
Electrical communication, and other equipment boxes, housings, and enclosures	Boxes, housings, and enclosures that penetrate the air barrier shall be caulked, taped, gasketed, or otherwise sealed to the air barrier element being penetrated. All concealed openings into the box, housing, or enclosure shall be sealed. The continuity of the air barrier shall be maintained around boxes, housings, and enclosures that penetrate the air barrier Alternatively, air-sealed boxes shall be installed in accordance with R402.4.6	Boxes, housing, and enclosure shall be buried in or surrounded by insulation
HVAC Register boots	All HVAC supply and return register boots shall be sealed to the subfloor, wall covering, or ceiling penetrated by the boot.	HVAC supply and return register boots located in the buildings thermal envelope shall be buried in or surrounded by insulation.
Concealed sprinklers	Where required to be sealed, concealed fire sprinklers shall only be sealed in a manner that is recommended by the manufacturer. Caulking or other adhesive sealants shall not be used to fill voids between fire sprinkler cover plates and walls or ceilings.	
Common walls	Air sealing materials recognized in a listed, fire resistance rated common wall design and installed in accordance with the listing, or Air sealing materials recognized in an approved design, shall be used. Common walls separating townhouse & duplex units shall be considered an exterior wall for the purposes of air barrier and air sealing application of this Table (R402.4.1.1).	Insulation materials recognized in the listed common wall design and installed in accordance with the listing, or Insulation materials recognized in the approved design, shall be used.

a. Inspection of log walls shall be in accordance with the provisions of ICC 400.
b. Air barrier and insulation full enclosure is not required in unconditioned/ventilated attic spaces and at rim joists.

Section R402.4.1.2 Testing is replaced in its entirety as follows:

R402.4.1.2 Testing. The *building* or *dwelling unit* shall be tested and verified as having an air leakage rate not exceeding three air changes per hour (3.0 ACH50) or 0.16 cfm per square foot (0.8 L/s/m^2) of *dwelling unit enclosure area* in *climate zone* 5.

Testing shall be conducted in accordance with ANSI/RESNET/ICC 380 and reported at a pressure of 0.2-inch w.g. (50 Pascals). Where allowed by the *building official* due to the volume of tests required, testing may be conducted by an *approved* third party. A written report of the results of the test shall be signed by the party conducting the test and provided to the *building official*. Testing shall be performed at any time after all penetrations of the *building thermal envelope* have been sealed.

Exceptions:

1. Heated, attached private garage space and heated, detached private garage space shall be thermally isolated from all other habitable, *conditioned spaces* in accordance with Sections R402.2.12 and R402.3.5, as applicable.
2. When testing individual *dwelling units*, an air leakage rate not exceeding 0.22 cubic feet per minute per square foot [0.006 $m^3/(s \times m^2)$] of the dwelling unit enclosure area, tested in accordance with ANSI/RESNET/ICC 380, ASTM E779 or ASTM E1827 and reported at a pressure of 0.2 inch w.g. (50 Pa), shall be an accepted alternative permitted for:

   2.1 Attached one- and two-family *dwelling units* and *townhouses*.

   2.2 Buildings or *dwelling units* that are 1,000 square feet (92.9 m^2) or smaller.

   2.3 Group R-X occupancies built in accordance with Section 429 of the *Denver Commercial Building Code.*

Mechanical ventilation shall be provided in accordance with Section M1505 of the *Denver Residential Code* or Section 403.3.2 of the *Denver Mechanical Code*, as applicable, or with other *approved* means of ventilation.

SECTION R403
SYSTEMS

Section R403.1.3 Continuously burning pilot lights is added as follows:

R403.1.3 Continuously burning pilot lights. The natural gas systems and equipment listed below shall not be permitted to have continuously burning pilot lights:

1. Mechanical or natural draft furnaces, boilers, and water heaters.
2. Household cooking appliances.
   Exception: Household cooking appliances without electrical supply voltage connections and in which each pilot light consumes less than 150 Btu/hr.
3. Pool heaters.
4. Spa heaters.
5. Fireplaces.

Section R403.3 Ducts and air handlers is modified as follows:

R403.3 Ducts and air handlers. Ducts and air handlers shall be installed in accordance with Sections R403.3.1 through R403.3.7. The air handler shall be installed within conditioned space.

Section R403.3.1 Ducts located outside conditioned space is modified as follows:

R403.3.1 Ducts located outside conditioned space. Supply and return ducts located outside *conditioned space* shall be insulated to an *R*-value of not less than R-8 and shall comply with Section R403.3.3 Ducts within ceiling insulation.

Section R403.3.2 Ducts located in conditioned space is modified by deleting item 2.3:

Section R403.3.3 Ducts buried within ceiling insulation is revised as follows:

R403.3.3 Ducts within ceiling insulation. Supply and return air ducts located in unconditioned attic or ceiling spaces shall comply with all the following:

1. The supply and return ducts shall have an insulation *R*-value not less than R-8.

2. The duct shall be installed on the truss bottom cord or ceiling joist closest to the ceiling finish material separating conditioned space from unconditioned space and the sum of the ceiling insulation *R*-value above the top of the duct, and against the sides of the duct, shall be greater than or equal to the proposed ceiling insulation *R*-value.

Section R403.3.3.1 Effective *R*-value of deeply buried ducts is revised as follows:

R403.3.3.1 Effective *R*-value of deeply buried ducts. Where using the Total Building Performance or Energy Rating Index Compliance Option ducts that are installed in accordance with Section R403.3.3, shall be considered as having an effective duct insulation *R*-value of not more than R-25.

Section R403.3.5 Duct testing is revised as follows:

R403.3.5 Duct testing. Duct~~s~~ shall be pressure tested in accordance with ANSI/RESNET/ICC 380 or ASTM E1554 to determine air leakage by one of the following methods:

1. Rough-in test: Total leakage shall be measured with a pressure differential of 0.1-inch w.g. (25 Pa) across the system, including the manufacturer's air handler enclosure if installed at the time of the test. All portions of the Duct system, including air handler, filter box, supply and return boots shall be tested.
2. Postconstruction test: Total leakage shall be measured with a pressure differential of 0.1-inch w.g. (25 Pa) across the entire system, including the manufacturer's air handler enclosure. All portions of the Duct system, including air handler, filter box, supply and return boots shall be tested.

A written report of the results of the test shall be signed by the party conducting the test and provided to the *building official*.

Exception:

A duct air-leakage test shall not be required for ducts serving ventilation systems that are not integrated with ducts serving heating or cooling systems.

Section R403.3.6 Duct leakage is revised as follows:

R403.3.6 Duct leakage. The total leakage of the duct~~s~~ system, where measured in accordance with Section R403.3.5, shall be as follows:

1. Rough-in test: The total leakage shall be less than or equal to 4.0 cubic feet per minute (113.3 L/min) per 100 square feet (9.29 m^2) of *conditioned floor area* where the air handler is installed at the time of the test.

   Exceptions:

   1. Where the air handler is not installed at the time of the test, the total leakage shall be less than or equal to 3.0 cubic feet per minute (85 L/min) per 100 square feet (9.29 m2) of *conditioned floor area*.
   2. If the HVAC duct system is serving less than or equal to 1,200 square feet of conditioned floor area, the allowable duct leakage shall be 50 cubic feet per minute or less.

2. Postconstruction test: Total leakage shall be less than or equal to 4.0 cubic feet per minute (113.3 L/min) per 100 square feet (9.29 m^2) of *conditioned floor area*.

Exception:

If the HVAC duct system is serving less than or equal to 1,200 square feet of conditioned floor area, the allowable duct leakage shall be 50 cubic feet per minute or less.

Section R403.5 Service hot water systems is revised as follows:

R403.5 Service hot water systems. Energy conservation measures for service hot water systems shall be in accordance with Sections R403.5.1 through R403.5.4.

Section R403.5.4 Water heating equipment location is added as follows:

R403.5.4 Water heating equipment location. Water heaters shall be located in a space with minimum dimensions 3 feet by 3 feet by 7 feet and one of the following characteristics:

1. Minimum volume of 760 cubic feet.

2. The equivalent of one 16-inch by 24-inch grill to a heated space and one 8-inch duct of no more than 10 feet in length for cool exhaust air.

Exceptions:

1. Electric water heaters with a rated storage volume of less than 20 gallons.

2. The space and ventilation requirements may be reduced to conform with the manufacturer's recommendations for a specific heat pump hot water heater that meets the requirements of Section R403.5. The specific heat pump water heater shall be identified on the construction documents and the certificate required by Section R401.3.

Section R403.5.5 Demand responsive water heating is added as follows:

R403.5.5 Demand responsive water heating. Electric storage water heaters with rated water storage volume equal to or greater than 40 gallons (150L) and equal to or less than 120 gallons (450L) and a nameplate input rating equal to or less than 12kW shall be provided with *demand responsive controls listed for participation in a demand response program that serves the building site* that comply with ANSI/CTA-2045 and are also capable of initiating water heating to meet the temperature set point in response to a *demand response signal* or another equivalent *approved* standard.

Exceptions:

1. Water heaters that provide a hot water delivery temperature of 180°F (82°C) or greater
2. Water heaters that comply with Section IV, Part HLW or Section X of the ASME Boiler and Pressure Vessel Code
3. Water heaters that use 3-phase electric power

Section R403.6.4 Intermittent exhaust control for bathrooms and toilet rooms is added as follows:

R403.6.4 Intermittent exhaust control for bathrooms and toilet rooms. Where an exhaust system serving a bathroom or toilet room is designed for intermittent operation, the exhaust system shall be provided with manual-on and one or more of the following controls:

1. Timer control that has a minimum set point of not greater than 30 minutes.

2. An occupant sensor control that automatically turns off exhaust fans within 30 minutes after all occupants have left the space.

3. A humidity control capable of manual or automatic adjustment from a minimum setpoint not greater than 50% to a maximum setpoint not greater than 80% relative humidity.

4. A contaminant control that responds to a particle or gaseous concentration.

Exception: Bathroom and toilet room exhaust systems serving as an integral component of an outdoor air ventilation system shall not be required to provide controls other than manual on capability.

An off setpoint shall not be used to comply with a minimum setpoint requirement.

SECTION R404
ELECTRICAL POWER AND LIGHTING SYSTEMS

Section R404.4 One- and two-family dwellings and townhouses *electric vehicle* (EV) charging requirements and subsections are added as follows:

R404.4 One- and two-family dwellings and townhouses *electric vehicle* (EV) charging requirements. *Electric vehicle (EV)* charging shall be provided and installed in accordance with this section and the National Electrical Code (*NFPA 70*).

Exception: The number of *electric vehicle ready spaces* per *lot* shall not be required to exceed one *electric vehicle ready space* per *dwelling unit* on that *lot*.

R404.4.1 *Electric vehicle (EV) ready spaces* for new *dwelling units*. Each new *dwelling unit* with *on-site parking spaces* shall be provided with a minimum of one *electric vehicle ready space*.

R404.4.2 *Electric vehicle (EV) ready spaces* for new garages and carports. Each new garage and/or carport with *on-site parking spaces* shall be provided with a minimum of one *electric vehicle ready space*.

R404.4.3 *Electric vehicle (EV) ready spaces* for new *on-site parking spaces*. Each new *on-site parking space* shall be provided with a minimum one *electric vehicle ready space*.

R404.4.4 Minimum *Electric Vehicle (EV)* Ready Space infrastructure. Each *Electric Vehicle (EV) Ready Space* shall provide the following infrastructure:

1. Installation of conductors.
   a. Conductors shall be installed of sufficient size to accommodate a 240VAC 40Amp branch circuit to each parking space where required.

   b. Conductors shall terminate at an outlet, receptacle or EVSE.

2. Branch circuits serving *EV Ready spaces* shall be identified as 'EV Ready' on the panelboard schedule, and the termination location shall be marked as 'EV Ready'.

R404.4.5 Construction Documents. Construction documents shall graphically indicate and label all *EV ready spaces* and associated termination locations. For all IRC Townhouses and one- and two-family dwellings with an electrical utility service exceeding 200Amps, a panelboard schedule shall be provided indicating the EV Ready circuit breaker space(s) and the circuit designation(s).

Section R404.5 Additional electric infrastructure is added as follows:

R404.5 Additional electric infrastructure. Fossil fuel appliances and equipment shall be installed in accordance with this section and Section R403.5.4

Exceptions:

1. Fossil fuel space heating equipment where a 208/240-volt electrical circuit with a minimum capacity of 40 amps exists for space cooling equipment.

2. Water heating equipment with an input capacity greater than 300,000 Btu/h that serves multiple dwelling units or sleeping units.

R404.5.1 Electric infrastructure. Fossil fuel appliances and equipment shall be provided with a junction box or receptacle located within 12" of the gas appliance, equipment or end-use that is connected to an electrical panel by continuous raceways or conductors that meets the following requirements:

1. The junction box, raceway, and bus bar in the electric panel and conductors serving the electric panel shall be sized to accommodate electric equipment sized to serve the same load as the fossil fuel appliance or equipment. The panel shall have reserved physical space for a two-pole circuit breaker.

2. The junction box and electrical panel directory entry for the dedicated circuit breaker space shall have labels stating, “For future electric equipment”.

Section R404.6 Solar-Ready Zone added as follows:

R404.6 SOLAR-READY ZONE. New detached one- and two-family dwellings, and (Denver Residential Code) townhouses with not less than 600 square feet (55.74 m2) of roof area that is oriented between 110 degrees and 270 degrees of true north or that is a low-sloped roof, shall comply with Sections R404.6.1 through R404.6.9.

Exceptions:

1. New residential buildings with a permanently installed on-site renewable energy system.

2. A building where all areas of the roof that would otherwise meet the requirements of Section R404.6 are in full or partial shade for more than 70 percent of daylight hours annually.

R404.6.1 Construction document requirements for solar ready zone. Construction documents shall indicate the solar ready zone.

R404.6.2 Solar-ready zone area. The total solar-ready zone area shall be not less than 300 square feet (27.87 m2) exclusive of mandatory access or setback areas as required by the *Denver Fire Code*. New townhouses three stories or less in height above grade plane (as defined by the Denver Residential Code) and with a total floor area less than or equal to 2,000 square feet (185.8 m2) per townhouse unit shall have a solar-ready zone area of not less than 150 square feet (13.94 m2). The solar-ready zone ~~per *townhouse unit*~~ shall be composed of areas not less than 5 feet (1524 mm) in width and not less than 80 square feet (7.44 m2) exclusive of access or setback areas as required by the *Denver Fire Code*.

R404.6.3 Obstructions. Solar-ready zones shall be free from obstructions, including but not limited to vents, chimneys, and roof-mounted equipment.

R404.6.4 Shading. The solar-ready zone shall be set back from any existing or new permanently affixed object on the building or site that is located south, east or west of the solar ready zone a distance not less than two times the object’s height above the nearest point on the roof surface. Such objects include, but are not limited to, taller portions of the building itself, parapets, chimneys, antennas, signage, rooftop equipment, trees, and roof plantings.

R404.6.5 Capped roof penetration sleeve. A capped roof penetration sleeve shall be provided adjacent to a solar-ready zone located on a roof slope of not greater than 1 unit vertical in 12 units horizontal (8-percent slope). The capped roof penetration sleeve shall be sized to accommodate the future photovoltaic system conduit and shall have an inside diameter of not less than 1-1/4 inches (32 mm).

R404.6.6 Electrical Conduit: Install a minimum one-inch (25 mm) metal conduit for future PV system wiring below the capped roof penetration sleeve in the attic to the designated inverter location. The conduit shall be clearly labeled as a Solar ready component indicating its purpose and intended use and shall be capped on both ends. The conduit run shall be identified on construction documents.

Exception: If roof design is such that all conduit is run on the outside elevation of the house to the solar ready zone, then caped roof penetration is not required and only conduit future location shall be required on the construction documents.

R404.6.7 Roof load documentation. The structural design loads for roof dead load and roof live load shall be clearly indicated on the construction documents.

R404.6.8 Electrical reserved space. The electrical panel shall have a reserved space to allow installation of a two- or three-pole circuit breaker for future solar electric installation. The reserved space shall be labeled "For Future Solar Electric." The reserved space shall be positioned at the opposite (load) end from the input feeder location or main circuit location.

R404.6.9 Construction documentation certificate. A permanent certificate, indicating the solar-ready zone and other requirements of this section, shall be posted near the electrical distribution panel, water heater or other conspicuous location by the builder or registered design professional. A copy of the construction documents or a comparable document indicating the solar-ready zone information shall be provided to the occupant.

Section R404.7 Minimum renewable energy system capacity is added as follows:

R404.7 Minimum renewable energy system capacity. New dwelling units shall be provided with an onsite renewable energy system(s) capable of producing annual renewable energy output of no less than 7.2 kBtu/yr (2.1 kWh/yr) per square foot of conditioned floor area of the dwelling unit or 0.12 ft^2 of panel per square foot of conditioned floor area of the dwelling unit. System specifications and system renewable calculations demonstrating that the system meets the requirements of this section shall be included in the construction documents. Onsite renewable energy system(s) used to comply with this section shall not be included in the calculations for Section R405 or Section R406. Areas of the roof that are in full or partial shade for more than 70% of daylight hours annually may not be used to meet this requirement.

Exceptions:

1. All-electric properties
2. Buildings complying with Section R401.2.1 that achieve at least 13 energy efficiency credits from Table R408.1 in addition to the requirements of Section R408.1.
3. Buildings complying with Section R401.2.3 that achieve an ERI not less than 5 points lower than the requirements of section R406.
4. Buildings complying with Section R401.2.2 with a proposed energy use that is 9-percentage points lower than required by R405.
5. Dwelling units with a conditioned floor area of less than 1000 sf.
6. Buildings that comply with A and B below that are provided with an onsite renewable energy system(s) capable of producing annual renewable energy output of no less than 1.2 kBtu/yr (0.35 kWh/yr) or 0.02 ft^2 of panel per square foot of conditioned floor area of the dwelling unit.
   A. Section R408.8.2 or Section R408.8.3, and
   B. One of the four sections of R408.10.2 through R408.10.5

SECTION R405

TOTAL BUILDING PERFORMANCE

Section R405.2 Performance-based compliance Item 3 is modified as follows; (Items 1, 2, and the exception to Item 3 remain unchanged):

3. An annual energy cost that is less than or equal to 95 percent of the annual energy cost of the standard reference design for all-electric properties and less than or equal to 82 percent of the annual energy cost of the standard reference design for all other buildings. Energy prices shall be taken from a source approved by the *building official*, such as the Department of Energy, Energy Information Administration's State Energy Data System Prices and Expenditures reports. The *building official* shall be permitted to require time-of-use pricing in energy cost calculations when such data is available from the local utility.

TABLE R405.2 REQUIREMENTS FOR TOTAL BUILDING PERFORMANCE is deleted in its entirety and replaced as follows:

Table R405.2
REQUIREMENTS FOR TOTAL BUILDING PERFORMANCE

SECTION[a]	TITLE
General	
R401.3	Certificate
R401.4	Homeowner manual
Building Thermal Envelope	
R402.1.1	Vapor retarder
R402.2.3	Eave baffle
R402.2.4.1	Access hatches and doors
R402.2.8.1	Basement Wall Insulation Installation
R402.2.9.1	Slab-on-grade floor insulation installation
R402.2.10.1	Crawl space wall insulation installation
R402.4.1.1	Installation
R402.4.1.2	Testing
R402.4.2	Fireplaces
R402.4.3	Fenestration air leakage
R402.4.4	Rooms containing fuel burning appliances
R402.4.5	Recessed lighting
R402.4.6	Electrical and communication outlet boxes (air Sealed boxes
Mechanical	
R403.1	Controls
R403.2	Hot water boiler temperature reset
R403.3	Ducts
R403.4	Mechanical system piping insulation
R403.5.1	Heated water circulation and temperature maintenance systems
R403.5.3	Drain water heat recovery units
R403.5.4	Water heating equipment location
R403.5.5	Demand Responsive Water Heating
R403.6	Mechanical ventilation
R403.7	Equipment sizing and efficiency rating
R403.8	Systems serving multiple dwelling units
R403.9	Snow melt and ice systems
R403.10	Energy consumption of pools and spas

R403.11	Portable spas
R403.12	Residential pools and permanent residential spas
Electrical Power and Lighting Systems	
R404.1	Lighting equipment
R404.2	Interior lighting controls
R404.4	Electric Vehicle Charging Requirements
R404.5	Additional Electrical Infrastructure
R404.6	Solar Ready Zone
R404.7	Minimum renewable energy system capacity

a. Reference to a code section includes all the relative subsections except as indicated in the table.

SECTION R406

ENERGY RATING INDEX COMPLIANCE ALTERNATIVE

Section R406 Energy Rating Index Compliance Alterative is modified by the deletion and replacement of Sections R406.1 through R406.6 with the following:

R406.1 Scope. This section establishes criteria for compliance using an Energy Rating Index (ERI) analysis developed per ANSI/RESNET/ICC 301.

R406.2 ERI compliance. Compliance based on the ERI requires that the rated design meets all of the following:

1. The requirements of the sections indicated within Table R406.2.
2. Maximum ERI values indicated in Table R406.4.

TABLE R406.2
REQUIREMENTS FOR ENERGY RATING INDEX

SECTION[a]	TITLE
General	
R401.3	Certificate
R401.4	Homeowner manual
Building Thermal Envelope	
R402.1.1	Vapor retarder
R402.2.3	Eave baffle
R402.2.4.1	Access hatches and doors
R402.2.8.1	Basement Wall Insulation Installation
R402.2.9.1	Slab-on-grade floor insulation installation
R402.2.10.1	Crawl space wall insulation installation
R402.4.1.1	Installation
R402.4.1.2	Testing
R402.4.2	Fireplaces
R402.4.3	Fenestration air leakage
R402.4.4	Rooms containing fuel burning appliances
R402.4.5	Recessed lighting
R402.4.6	Electrical and communication outlet boxes (air Sealed boxes
Mechanical	
R403.1	Controls
R403.2	Hot water boiler temperature reset
R403.3	Ducts
R403.4	Mechanical system piping insulation
R403.5.1	Heated water calculation and temperature maintenance systems
R403.5.3	Drain water heat recovery units
R403.5.4	Water heating equipment location
R403.5.5	Demand Responsive Water Heating
R403.6	Mechanical ventilation
R403.7	Equipment sizing and efficiency rating
R403.8	Systems serving multiple dwelling units
R403.9	Snow melt and ice systems
R403.10	Energy consumption of pools and spas
R403.11	Portable spas
R403.12	Residential pools and permanent residential spas
Electrical Power and Lighting Systems	
R404.1	Lighting equipment

R404.2	Interior lighting controls
R404.4	Electric Vehicle Charging Requirements
R404.5	Additional Electrical Infrastructure
R404.6	Solar Ready Zone
R404.7	Minimum renewable energy system capacity

a. Reference to a code section includes all the relative subsections except as indicated in the table.

R406.3 Energy Rating Index. The Energy Rating Index (ERI) shall be determined in accordance with the ANSI/RESNET/ICC 301 standard.

R406.4 ERI-based compliance. Compliance based on an ERI analysis requires that the *rated proposed design* and confirmed built dwelling be shown to have an ERI score less than or equal to the appropriate value indicated in Table R406.4 prior to renewables when compared to the *ERI reference design*.

TABLE R406.4

MAXIMUM ENERGY RATING INDEX (ERI)

All-Electric Properties	**All Other *Buildings***
55	50

R406.5 Verification by approved agency. Verification of compliance with Section R406 as outlined in Sections R406.3 and R406.4 shall be completed by an *approved* third party. Verification of compliance with TABLE R406.2 shall be completed by the Agency or an *approved* third-party inspection agency in accordance with Section R105.4.

Section R406.6 is Reserved.

SECTION R408
ADDITIONAL EFFICIENCY PACKAGE OPTIONS

Section R408 is deleted in its entirety and replaced with the following:

R408.1. Additional energy efficiency credit requirements. New all-electric properties shall comply with the following:

1. Section R408.8.2 or R408.8.3.

2. One of the four sections of ~~Section~~ R408.10.2 ~~or~~ through ~~R408.10.3~~R408.10.5.

3. A total of 3 credits from Table R408.1 except sections R408.7, R408.8 and R408.10 and their subsections.

All other buildings shall achieve a total of 18 credits from Table R408.1. Credit calculations shall be as specified in relevant subsections of Section R408.

TABLE R408.1 ADDITIONAL ENERGY EFFICIENCY CREDITS

Measure Description	Credit Value
R408.2: Energy Star Appliances	4
R408.3.1: ≥ 5% reduction in total UA	2
R408.3.2: ≥ 7.5% reduction in total UA	3
R408.3.3: ≥ 10% reduction in total UA	4
R408.4.1: ≤ 2 ACH50 air leakage rate	2
R408.4.2: ≤ 1 ACH50 air leakage rate	3
R408.5: ≤ 2 CFM of total duct leakage	2
R408.6: Ducts in Conditioned Space	5
R408.7.1: High Performance Space Cooling	1
R408.7.2: Premium Performance Space Cooling	2
R408.8.1: High Performance Gas Space Heating	2
R408.8.2: High Performance Electric Space Heating	8
R408.8.3: Premium Performance Electric Space Heating	10
R408.9.1: High Performance Heat/Energy Recovery Ventilation	4
R408.9.2: Premium Performance Heat/Energy Recovery Ventilation	7
R408.10.1: High Efficiency Gas Water Heating	2
R408.10.2: High Efficiency Electric Water Heating in conditioned space	6
R408.10.3: High Efficiency Electric Water Heating in unconditioned space	4
R408.10.4: Premium Efficiency Electric Water Heating in conditioned space	8
R408.10.5: Premium Efficiency Electric Water Heating in unconditioned space	5
R408.11.1: Drain Water Heat Recovery Units	2
R408.11.2: High Performance Drain Water Heat Recovery Units	3
R408.12: High Efficacy Lighting	2
R408.13: Demand Responsive Controls	1
R408.14: Controls	1

R408.2. EnergyStar Appliances. The building shall be provided with an EnergyStar qualified refrigerator, dishwasher, clothes washer, and clothes dryer.

Exception: Where an electrical outlet is not provided for an appliance.

R408.3. Reduced envelope UA. The building thermal envelope shall comply with either Section R408.3.1, R408.3.2 or R408.3.3.

R408.3.1. UA reduction of 5 percent. The total UA of the building thermal envelope as designed shall be not less than 5.0% below the total UA of the building thermal envelope in accordance with Section R402.1.5.

R408.3.2. UA reduction of 7.5 percent. The total UA of the building thermal envelope as designed shall be not less than 7.5% below the total UA of the building thermal envelope in accordance with Section R402.1.5.

R408.3.3. UA reduction of 10 percent. The total UA of the building thermal envelope as designed shall be not less than 10% below the total UA of the building thermal envelope in accordance with Section R402.1.5.

R408.4. Reduced air leakage. The air leakage rate of the building shall comply with R408.4.1 or R408.4.2 when calculated in accordance with Section R402.4.1.2:

R408.4.1. 2 ACH. The air leakage rate of the building shall be no greater than 2 air changes per hour.

R408.4.2. 1 ACH. The air leakage rate of the building shall be no greater than 1 air change per hour.

R408.5. Low duct leakage. All ducts shall have a postconstruction leakage rate no greater than 2 cubic feet per minute per 100 square feet of conditioned floor area served by the ducts when tested in accordance with Section R403.3.5.

R408.6. Duct location. All ducts shall be located within conditioned space in accordance with Section R403.3.2.

R408.7. Space cooling equipment efficiency. Space cooling equipment shall have efficiency rating in accordance with either R408.7.1 or R408.7.2.

R408.7.1. High performance space cooling. All space cooling equipment shall have a minimum SEER of 16.

R408.7.2. Premium performance space cooling. All space cooling equipment shall have a minimum SEER of 22.

R408.8. Space heating equipment efficiency. Space heating equipment shall have efficiency rating in accordance with either R408.8.1, R408.8.2 or R408.8.3.

R408.8.1. High performance gas space heating. All space heating equipment shall have a minimum AFUE of 95%.

R408.8.2. High performance electric space heating. All space heating ~~equipment~~ shall be provided by cold climate rated heat pumps that comply with the following:

1. Heat pumps shall have a rated COP of not less than 1.75 when operating at 5°F.

2. Non-Ducted heat pumps shall have an HSPF of not less than 10.

3. Ducted heat pumps shall have an HSPF of not less than 9.

4. The total electric resistance load for supplemental heating shall not exceed 1.35W per square foot of conditioned floor area of the building or 3 kW, whichever is greater.

5. Gas backup shall not be permitted.

R408.8.3. Premium performance electric space heating. All space heating ~~equipment~~ shall

be provided by heat pumps that comply with R408.8.2 and shall have a minimum HSPF of 11.2.

R408.9. Heat/Energy Recovery Ventilation. All ventilation air shall be provided by a whole house mechanical ventilation system that complies with R408.9.1 or R408.9.2:

R408.9.1 High performance heat/energy recovery ventilation. All ventilation air shall be provided by a heat or energy recovery ventilation system with a maximum rated Sensible Recovery Efficiency (SRE) at 0°C of no less than 75%.

R408.9.2 Premium performance heat/energy recovery ventilation. All ventilation air shall be provided by a heat or energy recovery ventilation system with a maximum rated Sensible Recovery Efficiency (SRE) at 0°C of no less than 90%.

R408.10. Water heating equipment efficiency. Water heating shall comply with either R408.10.1, R408.10.2, R408.10.3, R408.10.4, or R408.10.5.

R408.10.1 High efficiency gas water heating. All gas water heating equipment shall have a Uniform Energy Factor (UEF) of no less than 0.82.

R408.10.2 High efficiency electric water heating in conditioned space. All water heating equipment shall be electric heat pump water heaters and ~~electric water heating equipment~~ shall have a UEF of no less than 2.0 and shall be located in conditioned space.

R408.10.3 High efficiency electric water heating in unconditioned space. All electric water heating equipment shall have a UEF of no less than 2.0 and be located outside of conditioned space.

R408.10.4 Premium efficiency electric water heating in conditioned space. All electric water heating equipment shall have a UEF of no less than 3.1 and shall be located in conditioned space.

R408.10.5 Premium efficiency electric water heating in unconditioned space. All electric water heating equipment shall have a UEF of no less than 3.1 and shall be located outside of conditioned space.

R408.11. Drain water heat recovery. The building shall be provided with drain water heat recovery units in accordance with R403.5.3 and R408.11.1 or R408.11.2.

R408.11.1. Drain water heat recovery units. All shower, bathtub, laundry and sink drains shall be provided with drain water heat recovery units with Heat Recovery Efficiency of no less than 50%.

R408.11.2. High performance drain water heat recovery units. All shower, bathtub, laundry and sink drains shall be provided with drain water heat recovery units with Heat Recovery Efficiency of no less than 65%.

R408.12. High efficacy lighting. All rooms shall be provided with hard wired lighting with a lamp efficacy of 90 lm/W or a luminaire efficacy of 55 lm/W.

R408.13. Demand responsive controls. All thermostats serving the building shall be provided with demand responsive controls listed for participation in a demand response program that serves the building site.

R408.14 Controls. Not less than one thermostat shall be provided for each separate heating and cooling system.

R408.14.1 Thermostat. The thermostat controlling the primary heating or cooling system of the *dwelling unit* shall be capable of controlling the heating and cooling system on a daily schedule to maintain different temperature set points at different times of the day and different days of the week. This thermostat shall include the capability to set back or temporarily operate the system to maintain *zone* temperatures of not less than 55°F (13°C) to not greater than 85°F (29°C). The thermostat shall be programmed initially by the manufacturer with a heating temperature setpoint of not greater than 70°F (21°C) and a cooling temperature setpoint of not less than 78°F (26°C).

R408.14.1.1 Heat pump programmable controls. Thermostats capable of user configuration of supplemental heat operation shall have: (a) a factory default setting that disables use of supplemental heat based on space temperature differential from thermostat setting, and (b) default setting that restricts supplemental resistance heating to outside air temperatures of 20º F or below.

CHAPTER 5 [RE]
EXISTING BUILDINGS

SECTION R501
GENERAL

Section R501.4 Compliance is deleted in its entirety and replaced as follows:

R501.4 Compliance. *Additions, alterations, repairs,* or changes of occupancy to, or relocation of, existing buildings and structures shall comply with the provisions for *alterations, repairs, additions,* and changes of occupancy or relocation, respectively, in this code and the Denver Residential Code, the Denver Commercial Building Code, the Denver Existing Building Code, the Denver Fire Code, the Denver Fuel Gas Code, the Denver Mechanical Code, the Denver Plumbing Code, and the Electrical Code of the City and County of Denver.

Section R501.6 Historic buildings is replaced in its entirety as follows:

R501.6 Historic buildings. No provision of this code relating to the construction, *repair, alteration*, restoration, and movement of structures, and *change of occupancy* shall be mandatory for *historic buildings* provided that one of the following applies:

1. A report has been submitted to the *building official* and signed by the owner and a *registered design professional*, demonstrating that compliance with that provision would threaten, degrade, or destroy the contributing historic character or features, or the historic form, materials, or function of the building.

2. The Colorado State Historic Preservation Officer provides a letter to the *building official* with a finding that compliance with that provision would conflict with the Secretary of the Interior's Standards for Rehabilitation, outlining the specific provisions that are in conflict and how compliance would threaten, degrade, or destroy the contributing historic character or features, or the historic form, materials, or function of the building.

3. The Denver Landmark Preservation Commission or Lower Downtown Design Review Commission provides documentation to the *building official* with a finding that compliance with that provision would be in conflict with locally adopted historic preservation policies, standards, and guidelines, outlining the specific provisions that are in conflict and how compliance would threaten, degrade or destroy the historic character or features, or the historic form, materials or

function of the building.

SECTION R502
ADDITIONS

Section R502.1 General is replaced as follows:

R502.1 General. *Additions* to an existing building, building system or portion thereof shall conform to the provisions of this code as those provisions relate to new construction without requiring the unaltered portion of the existing building or building system to comply with this code. *Additions* shall not create an unsafe or hazardous condition or overload existing building systems. An *addition* shall be deemed to comply with this code where the addition alone complies using section R502.3, where the existing building and *addition* comply with this code as a single building, or where the building with the addition does not use more energy than the existing building. *Additions* shall be in accordance with Section R502.2 or R502.3.

Section R502.2 Change in space conditioning is amended by adding exception 4:

Exception:

4. Where complying with section R406 and when the Energy Rating Index of the *addition* and the existing *building*, and any *alterations* that are part of the project, is less than or equal to the Energy Rating Index of the existing building; the *addition* and any *alterations* that are part of the project shall comply with Section R406 in its entirety.

Section R502.3.1 Building envelope is modified by deleting the exception and replacing it with the following two exceptions:

Exceptions:

1. New envelope assemblies are exempt from the requirements of Section R402.4.1.2. The building official may require third party inspections to be performed in accordance with R402.4.1.1.
2. Where unconditioned space is changed to conditioned space, the air leakage rate of the *addition* shall comply where the air leakage rate, as determined in Section R402.4.1.2, of the existing building, the addition, and any alterations that are part of the project, is less than or equal to the air leakage rate of the existing building.

SECTION R503
ALTERATIONS

Section R503.1.4 Lighting is amended by deleting its exception.

R503.1.4 Lighting. New lighting systems that are part of the *alteration* shall comply with Section R404.1.

SECTION R505

CHANGE OF OCCUPANCY OR USE

Section R505.1 General is replaced in its entirety as follows:

R505.1 General. Any space that is converted to a residential building shall comply with the requirements of this chapter for additions, alterations, and repairs. Spaces undergoing a change in occupancy or use to a higher energy-demand category (higher number) as shown in Table R505.1 shall comply with Section R401.2.

Exceptions:

1. A change in use or occupancy from a lower-energy demand category to a residential building where it is calculated that it will not result in an increase in demand for fossil fuel and electrical energy.
2. Where the prescriptive compliance option in Section R401.2.1 is used to comply with this section, compliance with Section R408 is not required.
3. Where the Total UA Alternative option in Section R402.1.5 is used to comply with this section, the total building thermal envelope UA shall not be greater than 110 percent of the total UA calculated by using the U-factors in Table R402.1.2.
4. Where the total building performance option in R405 is used to comply with this section, the annual energy cost of the proposed design is permitted to be 110 percent of the annual energy cost allowed by R405.2.

TABLE R505.1

ENERGY-DEMAND CATEGORY	IBC OCCUPANCIES	IRC USES
4 (highest energy-demand)	A, B small assembly space	
3	B gym, E, I-4, M	
2	B (except as listed above), I-1, I-2, I-3, R	All uses permitted in IRC structures
1 (lowest energy-demand)	F, H, S	

CHAPTER 6 [RE]
REFERENCED STANDARDS

The following standards are added as follows:

CTA

1919 South Eads Street
Arlington, VA 22202

2045—Modular Communications Interface for Energy Management

ASME

Two Park Avenue
New York, NY 10016-5990
(800) 843-2763;

BPVC—Boiler and Pressure Vessel Code

IES

120 Wall Street, 17th Floor
New York, NY 10005-4001
www.ies.org

IESNA Lighting Handbook – 10th edition (2011)

END OF 2022 DENVER ENERGY CODE

ARTICLE 2

2022 DENVER FIRE CODE

2022 AMENDMENTS TO THE

2021 EDITION OF THE

INTERNATIONAL FIRE CODE (IFC) AND APPENDICES

AS PUBLISHED BY INTERNATIONAL CODE COUNCIL (ICC)

The 2021 International Fire Code and all errata to that code is hereby adopted and incorporated by reference except for the amendments to each chapter of the 2021 International Fire Code specified below.

CHAPTER 1
SCOPE AND ADMINISTRATION

SECTION 101
SCOPE AND GENERAL REQUIREMENTS

Sections 101.1 Title 101.2 Scope and 101.3 Purpose are replaced as follows:

101.1 Title. The title of this code is and may be cited and referred to as the Denver Fire Code. It may be referred to herein as "this code" or "the code," in both upper and lower case. The terms "Denver" and "City" are understood to mean the City and County of Denver.

101.2 Scope. This code establishes regulations affecting or relating to structures, processes, premises, and safeguards including, but not limited to:

1. Inspection of permanent and temporary buildings, processes, equipment, systems, and other fire- and safety-related situations, at intervals established by the *fire code official* but not to exceed once every 12 months.
2. Investigation of fires, explosions, hazardous materials incidents, and other related emergency events; the fire department shall be responsible for fire/explosion cause determination and subsequent investigation.
3. Recovery of City costs related to emergency response incidents, including the mitigation of hazardous materials incidents; nuisance alarms; problematic systems; fire safety inspections; systems testing; re-inspections; re-testing; investigations; emergency fire watch assigned to private properties, etc.
4. Storage, use, processing, handling, production and transportation of hazardous materials
5. Storage, use, processing, handling, production and transportation of flammable and combustible gases, liquids, and solids
6. Interior finish, decorations, furnishings, and other combustibles that contribute to fire spread, fire load, and smoke production in all occupancies
7. Hazards from interior fires in trash, excessive storage of combustibles, production of chemical material, and other materials that pose an exposure hazard to adjacent property in all occupancies including single family residences
8. Hazards from outside fires in vegetation, trash, storage, vehicles, combustible and flammable materials, building debris, fencing, and other materials
9. Regulation and control including assignment of-fire watch personnel, of special events including, but not limited to, assemblage of people, exhibits, trade shows, amusement parks, haunted houses, outdoor events, livestock events, large sporting events, and other similar special temporary and permanent occupancies
10. Existing occupancies and conditions,

11. Maintenance and testing of all fire- and life-safety systems
12. Access and water supply requirements for Denver Fire Department operations
13. Review of design plans and construction documents including drawings, calculations and specifications for the design and construction of new buildings, and alterations, additions, and repairs of existing buildings
14. Review of design plans and construction documents including drawings, calculations and specifications for the installation, alteration, addition, and repair of life- and fire-safety systems, equipment, features, components, devices, and apparatus including but not limited to fire protection systems, fire department access, water supply, flammable and combustible materials, storage, production and use of hazardous materials, commercial processes.
15. Fire and life safety education of fire brigades, employees, responsible parties, and the general public including the review and approval of emergency procedures for all occupancies and evaluation of fire drills
16. Control of emergency operations and scenes
17. Conditions affecting firefighter safety.
18. Licensing certification of firms/designers/installers/inspectors/testers of life safety systems equipment referenced in this code and standards and property managers, etc., responsible for the safety of others.
19. Review of design plans, construction documents and shop/layout drawings for the installation, alteration, modification and repair of conveyances.
20. Inspection of conveyances.
21. Review of design plans, construction documents and process systems for the growing, retail and medical sales, extraction, enrichment and infusing of marijuana and by-products.
22. Inspection of facilities used for the growing, retail and medical sales, extraction, enrichment and infusing of marijuana.

The provisions of this code shall supplement any and all laws relating to fire- and life-safety and shall apply equally to all of the following without restriction: persons, firms, corporations, the government of the United States of America, the government of the State of Colorado, the government of the City and County of Denver, and all agencies, subdivisions, and departments thereof. The provisions of this Code shall apply to existing conditions as well as to conditions arising after the adoption of the Code.

101.2.1 Appendices. Provisions in the appendices shall apply as noted by the Appendix Adoption Status.

101.3 Purpose. The purpose of this code is to establish the minimum requirements, consistent with nationally recognized good practice, for providing a reasonable level of occupant and pedestrian fire- and life-safety and property protection from the hazards of fire, explosion, production, use, and handling of dangerous and hazardous materials, substances, and devices, or dangerous conditions in new and existing buildings, structures, and premises, and to provide safety to firefighters and emergency responders during emergency operations.

SECTION 102

APPLICABILITY

Section 102.5 Application of residential code is amended by adding an exception as follows:

Exception: Other than premise identification (address), Section 102.5 shall not apply to the following:

a. Interior or exterior renovations constructed under the provisions of the *International Residential Code* to existing detached one- or two-family dwellings

b. Additions constructed under the provisions of the *International Residential Code* to existing detached one- or two-family dwellings; or

c. Demolition or removal of a one- or two-family dwelling and replacement with a single new one- or two-family dwelling constructed under the provisions of the *International Residential Code*; however, this Exception c does not apply to construction of a new structure permitted for use as an accessory dwelling unit.

Sections 102.7 Referenced codes and standards is amended by adding the following two sentences to the end of the section:

All references to the International Building Code, International Residential Code, International Existing Building Code, International Energy Conservation Code, International Fuel Gas Code, International Mechanical Code, and International Plumbing Code in this code mean the Denver Commercial Building Code, the Denver Residential Code, the Denver Existing Building Code, the Denver Energy Code, the Denver Fuel Gas Code, the Denver Mechanical Code, and the Denver Plumbing Code. Additional details regarding processes, methods, specifications, equipment testing and maintenance, or other pertinent criteria contained in these standards and codes listed in Chapter 80 of this Code shall be considered a part of this Code. Volumes 1 through 15 of the National Fire Codes are standards to this code.

Exception: National Fire Protection Association standards identified in Chapter 80 Referenced Standards as recommendations.

Section 102.8 Subjects not regulated by this code is replaced as follows:

102.8 Subjects not regulated by this code. Where no applicable codes, standards, or requirements are set forth in this Code or contained within other laws, codes, regulations, ordinances, or bylaws adopted by the City and County of Denver Fire Department, compliance with the applicable codes and standards of the National Fire Protection Association (NFPA) or other nationally recognized and *approved* standards shall be deemed as prima facie evidence of compliance with the intent of this code. Refer to Chapter 80 Reference Standards for a partial list of incorporated standards. Nothing herein shall derogate from the authority of the City and County of Denver Fire Department to determine compliance with codes or standards for those activities or installations within the Denver Fire Department's jurisdiction or responsibility.

Section 102.13 Transition Rules is added:

102.13 Transition Rules. This Code and implementation of all its provisions and policies shall become effective as follows:

102.13.1 Effective date. The effective date of Chapter 1 of this code shall be the effective date of the adopting ordinance. The effective date of the remainder of this code shall be May 1, 2023. As of May 1, 2023, 100% *construction documents* for projects submitted to the Fire Prevention Division shall be designed based on this Code, except as allowed in 102.13.2 below. Projects submitted to the Fire Prevention Division as 100% construction documents for review before May 1, 2023, may continue to use the 2019 Denver Fire Code.

102.13.2 Use of the 2019 or 2022 Denver Fire Code. Projects that will be submitted to the Fire Prevention Division after the effective date of the adopting ordinance, and before May 1, 2023, may use either the 2019 or 2022 Denver Fire Code. For purposes of this subsection 102.13.2, a project will be considered submitted to the Fire Prevention Division when a complete set of *construction documents* has been electronically provided by the applicant through the Fire Prevention Division's web-based permitting portal (also known as ePermits or Accela Citizen Access)

102.13.3 Continued use of the 2019 Denver Fire Code Other than Major Projects. Except for Major Projects as described in Sec. 102.13.4 below, this code shall not require changes in the *construction documents*, construction, or designated occupancy of a structure for which a lawful, unexpired permit has been issued. Subject to the timeframes in this subsection, projects submitted prior to May 1, 2023, may continue to use the 2019 Denver Fire Code. Projects designed based on the 2019 Denver Fire Code shall obtain permit approval within 180 days after May 1, 2023 and shall additionally obtain construction permits within 240 days (180 + 60) after May 1, 2023. Projects that do not meet the timeframes in this subsection are required to be redesigned in accordance with the 2022 Denver Fire Code.

102.13.4. Continuation of the 2019 Denver Fire Code for Major Projects. With the written approval of the *fire code official*, major projects established to be in design during the drafting of the new code, and that will be submitted to the Fire Prevention Division after May 1, 2023 may be reviewed and permitted under the 2019 Denver Fire Code. A major project does not include: a new single family, two-family, or townhouse project designed in accordance with the IRC; a tenant improvement; nor any other project with a total valuation less than $10,000,000. A major project allowed to be reviewed and permitted under the 2019 Denver Fire Code must meet the following requirements: (i) submit foundation only or the first phase of building construction drawings to the Building Permitting and Inspections Services Agency before 7/1/2023 and all phases (exclusive of deferred submittals) by 9/1/2023 (ii) obtain all permits by 12/31/2023; and (iii) begin foundation construction within 180 days of May 1. 2023. For consideration by the *building official* and *Fire Code official* the owner, or the owner's authorized agent, must submit a letter of request to the *building official and Fire Code official*, before May 1, 2023, stating:

1. Request to proceed under the 2019 Denver Fire Code

2 Address and project master number of the construction project

3 Description, number of stories, floor area, occupancy, etc., of the project

SECTION 103
CODE COMPLIANCE AGENCY

Sections 103.1.1 Fire Prevention Division and 103.1.2 Rules and regulations are added as follows:

103.1.1 Division of Fire Prevention. The Fire Prevention Division is established within the Fire Department of the City and County of Denver's Department of Public Safety under the direction of the Division Chief of Fire Prevention. This position is and may be referred to as the "*fire code official*," "Fire Official," and "Fire Marshal," in both upper and lower case. This code shall be administrated and enforced by the *fire code official*.

103.1.2 Rules and regulations. The *fire code official* shall have the full power to adopt, in reference to this Code, any rules, restrictions, or measures that may be advisable.

Section 103.2 Appointment is deleted.

Section 103.3 Deputies is replaced:

103.3 Deputies. In accordance with the prescribed procedures of the City and County of Denver's Department of Public Safety and with the concurrence of the Chief of the Fire Department, the *fire code official* shall have the authority to appoint a Deputy *fire code official*, Chief Fire Protection Engineer, Fire Protection Engineers, other related technical officers, fire inspectors, fire investigators, and employees. Their duties shall be those outlined by the *fire code official*.

SECTION 104
DUTIES AND POWERS OF THE FIRE CODE OFFICIAL

Section 104.1.1 Authority is added as follows:

104.1.1 Authority. The Fire Prevention Division is authorized to inspect land, buildings, structures, utilities, installations, equipment, devices, legal and illegal processes, and materials for fire, explosion, and other emergency hazards, releases of hazardous materials, false alarms, any unsafe conditions that relate to the protection of the public and/or property and other emergencies. The Division is also authorized to issue permits, inspect, and enforce compliance regarding elevators and similar devices, escalators, moving walks, automated people movers (APM, also known as AGTS) according to State of Colorado Conveyance Regulations (7 Code of Colorado Regulation 1101-8), the Denver Fire Code and Section 1109 and Chapter 30 of the Denver Building Code at a minimum. The Division shall have the authority to investigate fire protection and other life safety systems that are disabled or not functioning. The Division shall also have the authority on behalf of the Department of Public Safety to control the use, location, and transportation of flammable or combustible liquids or acids (in a chemical or physical state) or hazardous materials; the issuance of permits; the issuance of notices, orders, or Denver County Court summonses for the correction or immediate abatement of hazardous situations; the enforcement of this code and other laws, ordinances, rules, and regulations, which are within the perspective of this Code and standards set forth in Chapter 80.

Section 104.3 Right of entry is replaced as follows:

104.3 Right of entry. Whenever it is necessary to make an inspection to enforce the provisions of this code, or whenever the *fire code official* has reasonable suspicion to believe there exists in a building or upon any premises, any vehicle, or any vessel, any conditions or violations of this code that make the premises, vehicle, or vessel unsafe, dangerous, or hazardous, the *fire code official* shall have the authority to enter the building, vehicle, or vessel to conduct an inspection and, if necessary, an investigation, taking photographs of unsafe, dangerous, or hazardous conditions or for investigative or fire investigation purposes or the pursuance of any other emergency, or to perform the duties upon the *fire code official* by this code. If such building, premises, or vehicle is occupied, the *fire code official* shall present credentials to the occupant and request entry. If such building, premises, or vehicle is unoccupied, the *fire code official* shall first make a reasonable effort to locate the owner or other person having charge or control of the building or premises and request entry. If entry is refused, the *fire code official* has recourse to every remedy provided by law to secure entry.

Sections 104.3.2 Interference with enforcement and 104.3.3 Power to protect property are added:

104.3.2 Interference with enforcement. It shall be unlawful for persons to interfere or cause conditions that would interfere with the *fire code official* in carrying out any duties or functions prescribed by this code.

104.3.3 Power to protect property. The *fire code official* shall have power to cause the removal of any property, when necessary, to preserve such property from fire, explosion, or other emergency; to prevent the spreading of fire; or to protect adjoining property. No person shall be entitled to remove any property in the possession of the *fire code official* saved from any fire until proof of ownership thereof is furnished.

Section 104.4.1 Impersonation is added as follows:

104.4.1 Impersonation. Persons shall not use a badge, uniform, or other credentials to impersonate a *fire code official* - prevention, engineering or investigation.

Section 104.6.3 Fire records is replaced:

104.6.3 Fire records. The Fire Department shall keep a record of all fires, explosions, and other emergencies occurring within its jurisdiction and of facts concerning the same, including reports (including investigation reports), photographs, videos, and statistics as to the extent of such fires and the damage or injury caused thereby, together with other information as required by the *fire code official*. All records related to a property shall be maintained for the life of the property. All other records shall be maintained for no less than seven years.

Section 104.6.3.1 Fire loss information is added as follows:

104.6.3.1 Fire loss information. It shall be the responsibility of any person suffering a fire, explosion, building collapse, or other emergency resulting in injury(s) to persons and/or property loss within the City and County of Denver to report the incident and to provide the Division in writing with the dollar value of the resulting loss within ten days of the loss. If insured, the person may provide the name and address of the insurance company, in which case the insurance company shall supply the final loss figures to the Division.

Section 104.8.2 Technical assistance is replaced in its entirety as follows:

104.8.2 Technical assistance. To determine the adequacy and permissibility of existing and proposed assemblies, facilities, materials, occupancies, processes, products, systems, and technologies attending the design, operation or use of a building, structure, premises, or appurtenances situated thereon, subject to review or inspection by the *fire code official,* the *fire code official* is authorized to require the *owner* or owner's authorized agent to provide without charge to the jurisdiction, any or all of the following technical assistance and a meaningful report including recommendations: analyses, calculations, drawings, experiments, inspections, interpretations, observations, opinions, reviews, research, and tests. Technical assistance shall be provided, and the report prepared by a qualified expert preapproved by the *fire code official*. The *fire code official* is authorized to require the report to be prepared by, and bear the stamp of, a registered design professional.

Section 104.8.2.1 Final determination is added as follows:

104.8.2.1 Final determination. The *fire code official* shall make the final determination as to whether the provisions of this code have been met.

Sections 104.9.1 Application for modification and 104.9.2 Compliance with code are added:

104.9.1 Application for modification. The *fire code official* is authorized to modify any of the provisions of this code upon application in writing by the owner where there are practical difficulties in carrying out the provisions of the Code, provided the intent of the code shall be complied with, public safety secured, and substantial justice done.

104.9.2 Compliance with code. Buildings with equivalency, alternative, or modification *approved* by the *building official* and *fire code official* shall be considered conforming to the code.

Sections 104.10.3 Fire protection features and 104.10.4 Building Code are added:

104.10.3 Fire protection features. Each application for an alternate fire protection feature shall be filed with the *fire code official* and shall be accomplished by such evidence, letters, statements, test results, or other supporting information as required to justify the request. The *fire code official* shall keep a record of actions on such applications, and a signed copy of the *fire code official*'s decision shall be provided for the applicant.

104.10.4 Building Code. Whenever the alternate material or method involves matters regulated by the Denver Fire Code and Denver Building Code, approvals are also subject to approval of the *building official*.

Sections 104.11 Fire investigations is replaced:

104.11 Fire investigations. The Division or the Fire Department is authorized to investigate without delay the cause, origin, and circumstances of each and every fire or explosion or intent to commit such an act occurring within the City and County of Denver involving the loss of life or injury to a person or destruction or damage to property and, if it appears to the fire investigators that such fire or explosion is of suspicious origin, the investigators are authorized to take immediate charge of all physical evidence relating to the intent or cause of the fire and are authorized to pursue the investigation to its conclusion.

104.11.1 Release of hazardous materials. The *fire code official* is authorized to investigate the cause, origin, and circumstances of unauthorized releases of hazardous materials. The *fire code official* is authorized to recover from the responsible party(s) all costs incurred by the City for mitigation, rendering the release harmless to people or property, including personnel and equipment, securing the incident scene, removal of materials released and cleanup.

Section 104.11.1 Assistance from other agencies is deleted.

Sections 104.11.2 Authorization of Denver Police Department, 104.11.3 Limiting access, and 104.11.4 Interference with enforcement are added:

104.11.2 Authorization of Denver Police Department. The Denver Police Department is authorized to assist the Fire Department in any investigation when requested to do so by the Executive Director of the Department of Public Safety, the Fire Chief, or the *fire code official*.

104.11.3 Limiting access. The Fire Department shall have the authority to limit access to buildings, property, vehicles, vessels, or other similar conveyances by any vehicle, vessel, or person during an investigation.

104.11.4 Interference with enforcement. Persons shall not interfere, nor cause conditions that would interfere with, the fire investigator carrying out any duties or functions, including arrest of suspects, prescribed by this Code.

Section 104.12.1.1 Scene barrier is added as follows:

104.12.1.1 Scene barrier. The incident commander in charge of an emergency scene shall have the authority to establish barriers to control access in the vicinity of such emergency and to place, or cause to be placed, ropes, guards, barricades, or other obstructions across any public or private street or alley, to delineate an emergency scene barrier(s). No person, except as authorized by the incident commander in charge of the emergency, shall be permitted to cross barriers established in accordance with Sections 104.11.1 and this section. Whenever the emergency incident involves private property, the owner of said property shall be responsible for all costs related to placement, rental and use of barricades; all costs incurred by the City for mitigation, rendering the scene harmless to people or property, and removal of equipment and materials and cleanup.

Section 104.12.3.1 Resetting or silencing of alarms is added as follows:

104.12.3.1 Resetting or silencing of alarms. No person shall reset or silence a fire protection or life safety system unless by direction of the fire chief, *fire code official* or fire department official in charge of the incident.

Section 104.12.4 Emergency power to demolish buildings and 104.12.5 Cost recovery are added:

104.12.4 Emergency power to demolish buildings. When a fire is in progress, the *fire code official*, or the officer in charge of the fire, may order any building that is in close proximity to such fire to be torn down, blown up, or otherwise disposed of for the purpose of checking the conflagration. The property owner shall be responsible for all costs related to all operations.

104.12.5 Cost recovery. The property owner shall be responsible for all costs related to placement, rental and use of barricades.

Section 104.13 Unsafe buildings, structures or utilities and subsections are added as follows:

104.13.1 Notice and Abatement. If, after inspection by the Department, the building, structure or utility is determined to be unsafe by the *fire code official*, it shall be abated by repair, replacement, removal or demolition upon notice by the *fire code official*. If the building or structure has common property line walls, then the *fire code official* shall notify the adjacent building owners that their building may be unsafe and may require repair or reinforcement.

104.13.2 Buildings or Structures. In the case of an unsafe building or structure, the *fire code official* may order such building or structure, or any buildings or structures placed in jeopardy by the unsafe building or structure, vacated immediately. When necessary to protect life, property, health and public welfare, the *fire code official* may cause to have posted signs which shall prohibit entry into an unsafe building or structure. However, with permission of the *fire code official*, it shall be lawful to enter the unsafe building or structure for the purpose of effecting any required repairs, rehabilitation or demolition; or by members of the Fire Department. The signs shall be provided and attached to the building or structure by the Department and shall read, in addition to other information, "**UNSAFE – DO NOT ENTER.**"

104.13.3 Utilities. In the case of an unsafe utility, the *fire code official* shall cause to be affixed an *approved* warning tag on the unit declared to be unsafe. The *fire code official* shall order the unsafe utility disconnected or its use discontinued until the unsafe condition is abated. In addition, the *fire code official* may order any building, structure or utility which is placed in jeopardy by the unsafe utility to be vacated and/or disconnected, and these shall not be reoccupied or reconnected until declared safe by the *fire code official*. It shall be unlawful for anyone to mark any unsafe utility, as herein defined, with any type markings or tags declaring them to be unsafe, except as authorized by the *fire code official*.

104.13.4 Demolition or Securing by the City. If the owner and/or occupant of an unsafe building, structure or utility fails to perform the repairs, rehabilitation, securing or removal required by an order within the time specified therein or any extension of time to comply with said order, the *fire code official* may, as set forth in this Section, cause the demolition or securing of the unsafe building or structure.

104.13.5 Emergency Demolition or Securing. In the event an emergency should occur wherein the continued use or existence of a building, structure or utility may constitute an immediate hazard to life, health, property or public welfare, the *fire code official* may order and/or cause the building, structure or utility to be demolished, removed, disconnected, secured or barricaded at once by any means available to the Agency. When feasible, the *fire code official* shall attempt to give notice, by any means, to the owner of the building, structure or utility prior to taking any action. Cost and expense of demolition, removal, securing or barricading, if borne by the City, shall be recovered as provided for in this Section.

SECTION 105
PERMITS

Section 105.1 General is replaced:

105.1 General. The *fire code official* shall be authorized to establish and issue permits, certificates, notices, approvals, or orders pertaining to fire and hazard control and fire and explosion hazards wherever indicated by this Code. A permit issued under the provisions of this Code shall continue until revoked or for such a period of time designated therein at the time of issuance. Such permit shall not be transferable, and any change in use, occupancy, operation, or ownership shall require a new permit. Permits for activities requiring evidence of financial responsibility by the jurisdiction shall not be issued unless proof of required financial responsibility is furnished. Any attempt to misrepresent or otherwise deliberately or knowingly design; install; service; maintain; operate; sell; represent for sale; falsify records, reports, or applications; or act in any related activity in violation of the requirements prescribed by this Code shall be a violation of this Code. Such violations shall be cause for immediate suspension or revocation of any related licenses, certificates, or permits issued by the *fire code official*. In addition, any such violation shall be subject to any other criminal or civil penalties as available by the laws of this jurisdiction. An inspection is required prior to the issuance of a permit. Any person who engages in any business, operation, or occupation, or uses any premises, after the permit issued therefore has been suspended or revoked pursuant to the provisions of this Code, and before such suspended permit has been reinstated or a new permit has been issued, shall be in violation of this Code. Permits shall be in accordance with Sections 105.1.1 through 105.6.162

Section 105.1.7 Other required permits is added as follows:

105.1.7 Other required permits. The requirements for permits from other City agencies shall not waive the requirement for permits required by this Code. Where a permit is required by other City agencies, such permit shall be obtained prior to or simultaneous with the issuance of a permit required by this Code.

Section 105.5 Required operational permits and all subsections are replaced as follows:

105.5 Required permits. The *fire code official* is authorized to issue operational permits for the operations set forth in Sections 105.5.1 through 105.5.160.

105.5.1 Abandoned buildings. A permit is required for abandoned and/or vacant buildings. (See Section 311 of the *International Fire Code*.)

105.5.2 Additive manufacturing. An operational permit is required to conduct additive manufacturing operations regulated by Section 320.3

105.5.3 Aerosol products, aerosol cooking spray products, and plastic aerosol 3 products. A permit is required to manufacture, store or handle an aggregate quantity of Level 1, Level 2 or Level 3 aerosol products, aerosol cooking spray products, or plastic aerosol 3 products of 300 pounds (136 kg) or more net weight.

105.5.4 Air compressor. A permit is required for building smoke management and fire protection systems certificate of fitness in accordance with ASME Code.

105.5.5 Aircraft hangar. A permit is required per bay or square footage per NFPA 409.

105.5.6 Aircraft refueling vehicles. A permit is required for each aircraft refueling vehicle.

105.5.7 Ammunition. A permit is required to store and handle ammunition, large arms and small arms.

105.5.7.1 Large arms

105.5.7.2 Small arms

105.5.8 Amusement buildings. A permit is required to operate a special amusement building.

105.5.9 Appliances fueled by waste petroleum products. A permit is required to operate appliances fueled by waste petroleum products.

105.5.10 Asbestos removal. A permit is required for the removal of asbestos (for each building or portion thereof).

105.5.11 Asphalt kettles (other than roofing operations). A permit is required to transport and operate an asphalt kettle.

105.5.12 Asphalt recycling. A permit is required for all forms of asphalt recycling.

105.5.13 Automobile wrecking yard. A permit is required for the operation of an automobile wrecking yard.

105.5.14 Aviation facilities. A permit is required to use a Group H or Group S occupancy for aircraft servicing or repair and aircraft fuel servicing vehicles. Additional permits required by other sections of this code include, but are not limited to, hot work, hazardous materials, and flammable or combustible products.

105.5.15 Battery charging. A permit is required to charge batteries on or off powered-industrial trucks and similar equipment having an electrolyte capacity of 10 gallons or more or size of 8kW or greater.

105.5.15.1 Battery charging – indoor. A permit is required for indoor charging of batteries having an electrolyte capacity of 10 gallons or more or size of 8kW or greater.

105.5.16 Blank cartridges. A permit is required prior to the purchase of blank pyrotechnic cartridges. No dealer shall sell blank cartridges except upon presentation of an authorized permit.

105.5.17 Bonfires / Rubbish fires. A permit is required for bonfires and rubbish fires.

105.5.18 Bowling alley refinishing. A permit is required to refinish bowling alleys.

105.5.19 Building emergency communication system. A permit is required to test the emergency communication system.

105.5.20 Building fire alarm system. A permit is required to test the fire alarm system.

105.5.21 Building fire protection system. A permit is required to test the fire protection system.

105.5.22 Building fire standpipe system. A permit is required to test the fire standpipe system.

105.5.23 Building property manager certification. A permit is required to obtain training and certification for building property managers.

105.5.24 Burning in public places / Open burning. A permit is required for the kindling or maintaining of an open fire or a fire on any public street, alley, road, or other public or private ground. Instructions and stipulations of the permit shall be adhered to.

Exception: Recreational fires when a fire ban has not been instituted.

105.5.25 Candles and open flames in assembly areas. A permit is required to use open flames or candles in connection with assembly areas, dining areas of restaurants or drinking establishments.

105.5.26 Canopies. A permit is required to erect a canopy having an area as follows:

105.5.26.1 Canopies having an area of 300 square feet or more but less than 500 square feet.

105.5.26.2 Canopies having an area of 500 square feet or more.

105.5.27 Carbon dioxide (CO_2).

105.5.27.1 Carbon dioxide (CO_2) systems used in beverage dispensing applications. A permit is required for the use of carbon dioxide (CO_2) systems with more than 100 pounds (45.4 kg) of carbon dioxide or any system using any amount of carbon dioxide (CO_2) below grade used in beverage dispensing applications.

105.5.27.2 Carbon dioxide (CO_2) gas enrichment systems using on-site supply tanks and/or cylinders in plant growing (husbandry) applications. A permit is required for carbon dioxide enrichment systems with more than 100 pounds (45.4 kg) of carbon dioxide or any system using any amount of carbon dioxide (CO_2) below grade used in plant growing (husbandry) applications.

105.5.27.3 Carbon dioxide (CO_2) gas enrichment systems using a natural gas burner in plant growing (husbandry) applications. A permit is required for natural gas burners that are utilized to generate carbon dioxide (CO_2) in plant growing (husbandry) applications.

105.5.28 Carbon monoxide alarms and carbon monoxide detectors. A permit is required for the installation, relocation or removal of carbon monoxide alarms and detectors required under provisions of Section 915.

105.5.29 Carnivals and fairs. A permit is required to conduct a carnival or fair. The event coordinator shall be responsible for obtaining a permit which can be issued for a single event or annually; vendors shall be responsible for individual permits for booths.

105.5.30 Cellular/wireless signal repeater sites. A permit is required to install and maintain cellular/wireless signal repeater sites.

105.5.31 Cellulose nitrate. A permit is required to store, handle, use, or display cellulose nitrate.

105.5.32 Cellulose nitrate film. A permit is required to store, handle, use, or display cellulose nitrate film.

105.5.33 Certification – Construction fire safety officer. Includes point-of-contact relative to permits.

105.5.34 Chili roaster. A permit is required to operate a chili roaster as follows:

105.5.34.1 LPG fuel permit

105.5.35 Combustible fibers. A permit is required for the storage and handling of combustible fibers in quantities of 100 cubic feet (2.8 m^3) or more.

Exception: A permit is not required for agricultural storage.

105.5.36 Combustible material storage. A permit is required to store in any building or upon any premises 2,500 cubic feet (71 m^3) or more gross volume of combustible empty packing cases, boxes, barrels or similar containers, rubber tires, rubber, cork or similar combustible material.

105.5.37 Commercial rubbish. A permit is required to operate a rubbish or recycling handling facility.

105.5.38 Compressed gases (not LPG). A permit is required for the storage, use or handling at normal temperature and pressure (NTP) of compressed and liquefied gases in quantities equal or greater than the amounts listed in Table 105.5.38.

Exception: Vehicles equipped for and using compressed gas as a fuel for propelling the vehicle.

TABLE 105.5.38
PERMIT AMOUNTS FOR COMPRESSED AND LIQUIFIED GASES [a]

Type of Gas	Gaseous (cubic feet at NTP)	Liquified (pounds)
Biohazard	Any Amount	Any Amount
Carcinogen	200	37
Corrosive	200	37
Flammable	200	37
Highly Toxic	Any Amount	Any Amount
Inert	6,000	1,100
Irritant	200	37
Other Health Hazard	650	120
Oxidizing (including oxygen)	504	50
Pyrophoric	Any Amount	Any Amount
Sensitizer	200	37
Simple Asphyxiant	6,000	1,100
Toxic	Any Amount	Any Amount
Unstable (Reactive)	Any Amount	Any Amount

	Not Sealed (microcurie)	Sealed (millicurie)
Radioactive	Any Amount	Any Amount

For SI: 1 cubic foot = 0.02832m^3
a. See Table 105.5.42 for cryogenic fluids, and Section 105.5.87 and Chapter 61 for liquefied petroleum gases (LPG)

105.5.39 Compressed natural gas (CNG). A permit is required to operate a compressed natural gas tank.

105.5.40 Conveyances. Annual operating permits are required for all conveyances regulated in accordance with ASME A17.1. See Section 920.

Exception: dumbwaiters and material lifts.

105.5.41 Covered mall buildings. A permit is required for:

1. The placement of retail fixtures and displays, concession equipment, displays of highly combustible goods and similar items in the mall.
2. The display of liquid- or gas-fired equipment in the mall.
3. The use of open-flame or flame-producing equipment in the mall.

105.5.42 Cryogenic fluids. A permit is required to produce, store, transport on site, use, handle or dispense cryogenic fluids in quantities equal to or greater than the amounts listed in Table 105.5.42.

TABLE 105.5.42
PERMIT AMOUNTS FOR CRYOGENIC FLUIDS

Type of Cryogenic Fluid	Inside Building (gallons)	Outside Building (gallons)
Flammable	More than 1	60
Inert	60	500
Oxidizing (includes oxygen)	10	50
Physical or health hazard not indicated above	Any Amount	Any Amount

105.5.43 Demolition by explosives. A permit is required for the use of any explosive device for demolition operations.

105.5.44 Distilleries. A permit is required for an alcohol beverage production facility (ABPF) to produce, bottle, rectify, or process a beverage spirit with an alcohol-by-volume (ABV) content greater than 16 percent including areas for fermentation, distillation, bulk storage for distilling, blending, packaging, and accessory uses.

105.5.45 Dry cleaning plants. A permit is required to engage in the business of dry cleaning or to change to a more hazardous cleaning solvent used in existing dry-cleaning equipment.

105.5.46 Dust-producing operations. A permit is required for all dust-producing operations. This permit does not include woodworking.

105.5.47 Emergency responder radio enhancement coverage system (RES). A permit is required for the annual and five-year testing of the system.

105.5.48 Energy storage systems. An operational permit is required for stationary and mobile energy storage systems regulated by Section 1207 and having a capacity equal or greater than 15 percent of the value indicated in Table 1207.1.1 for the specific technology.

105.5.49 Equipment testing. A permit is required to test equipment as follows:

105.5.49.1 Fire alarm systems. Smoke detector, horn/strobe, etc. Annual permit does not include overtime costs.

105.5.49.2 Fire protection systems. Sprinkler head, flow switch, etc. Annual permit does not include overtime costs.

105.5.49.3 Smoke management systems. Annual permit does not include overtime costs.

105.5.49.4 Standpipe systems. Annual permit does not include overtime costs.

105.5.50 Exhibits and trade shows. A permit is required to operate exhibits and trade shows.

105.5.51 Explosives/blasting agents. A permit is required for the manufacture, storage, handling, sale or use of any quantity of explosives, explosive materials, fireworks or pyrotechnic special effects within the scope of Chapter 56.

Exception: Storage in Group R-3 occupancies of smokeless propellant, black powder and small arms primers for personal use, not for resale and in accordance with Section 5606.

105.5.52 Failure to obtain a permit. A temporary permit is required when a required permit has not been obtained. The fee for this temporary permit shall be double the cost of the required permit.

105.5.53 Fencing posing a hazard to firefighters. When approved by the fire code official in accordance with Section 316.7, A permit is required for any fencing type that poses physical or health hazards to responding firefighters including barbed wire or fencing powered by a 12-volt direct current (DC) power source.

105.5.53 54 File search. A fee is required for the following file searches:

105.5.53.1 Fire Prevention/Hazardous materials.

105.5.53.2 Amendment packet.

105.5.53.3 Fire investigation records including videotapes.

105.5.53.4 Property records.

105.5.53.5 Inspection and permit records.

105.5.55 Fire alarm signal delay equipment including alarm verification. A permit is required to install and maintain fire alarm signal delay equipment integrated with the FACP.

105.5.56 Fire department fire alarm radio transmitter (wireless Denver Fire Department communicator). A permit is required to install and maintain fire department fire alarm radio equipment for monitoring fire and burglar alarms.

105.5.57 Fire hydrants and valves. A permit is required to maintain a private fire hydrant system. This applies to existing systems only. New private fire hydrant systems are prohibited.

105.5.58 Fire protection system maintenance. A permit is required to perform maintenance on a private fire hydrant system.

105.5.59 Fire pumps and related equipment. A permit is required to inspect and test fire pumps and related equipment.

105.5.60 Fire watch. A permit is required whenever a fire watch is mandated.

105.5.61 Fireworks/pyrotechnics. A permit is required for all professional pyrotechnic programs.

105.5.62 Flammable or combustible liquids. A permit is required:

1. To use or operate a pipeline for the transportation within facilities of flammable or combustible liquids. This requirement shall not apply to the off-site transportation in pipelines regulated by the Department of Transportation (DOT) nor does it apply to piping systems.

2. To store, handle or use Class I liquids of 30 gallons (114 L) or more in a building or of 60 gallons (228.6 L) or more outside of a building, except that a permit is not required for the following:

   2.1. The storage or use of Class I liquids in the fuel tank of a motor vehicle, aircraft, motorboat, mobile power plant or mobile heating plant, unless such storage, in the opinion of the code official, would cause an unsafe condition.

   2.2. The storage or use of paints, oils, varnishes or similar flammable mixtures when such liquids are stored for maintenance, painting or similar purposes for a period of not more than 30 days.

3. To store, handle or use Class II or IIIA liquids of 60 gallons (228.6 L) or more in a building or of 120 gallons (457.1 L) or more outside a building, except for fuel oil used in connection with oil-burning equipment.

3.1 To store, handle or use Class IIIB liquids of 1,000 gallons or more in a building or outside a building.

4. To remove Class I or Class II liquids from an underground storage tank used for fueling motor vehicles by any means other than the *approved*, stationary on-site pumps normally used for dispensing purposes.

5. To operate tank vehicles, equipment, tanks, plants, terminals, wells, fuel-dispensing stations, refineries, distilleries and similar facilities where flammable and combustible liquids are produced, processed, transported, stored, dispensed or used.

6. To place temporarily out of service (for more than 90 days) an underground, protected above-ground or above-ground flammable or combustible liquid tank.

7. To change the type of contents stored in a flammable or combustible liquid tank to a material which poses a greater hazard than that for which the tank was designed and constructed.

8. To manufacture, process, blend or refine flammable or combustible liquids.

9. To engage in the dispensing of liquid fuels into the fuel tanks of motor vehicles at commercial, industrial, governmental or manufacturing establishments.

10. To utilize a site for the dispensing of liquid fuels from tank vehicles into the fuel tanks of motor vehicles at commercial, industrial, governmental or manufacturing establishments.

11. A site plan shall be submitted showing the following: distances from all buildings, property lines, utility poles, power lines, railroad tracks, etc. A Hazardous Materials Inventory Statement (HMIS) may be required upon request**.**

105.5.63 Floor cleaning. A permit is required for floor cleaning operations using flammable or combustible liquids or compressed gases as follows:

105.5.63.1 Single address/ one time

105.5.63.2 Annual/same building

105.5.63.3 Annual/multiple sites

105.5.64 Floor finishing. A permit is required for floor finishing or surfacing operations of 350 square feet (33 m^2) or more using flammable or combustible liquids or compressed gases.

105.5.65 Fruit and crop ripening. A permit is required to operate a fruit- or crop-ripening facility or conduct a fruit-ripening process using ethylene gas.

105.5.66 Fuel-fired equipment used in confined spaces. A permit is required to operate fuel-fired equipment in confined spaces.

105.5.67 Fumigation/thermal insecticidal fogging. A permit is required to operate a business of fumigation or thermal insecticidal fogging and to maintain a room, vault or chamber in which a toxic or flammable fumigant is used.

105.5.68 Generator Set. A permit is required to maintain and operate the following fueled generator set(s) with or without an integral tank.

105.5.68.1 Fuel Oil

105.5.68.2 Natural Gas

105.5.69 Halogenated agent systems/extinguishers. A permit is required to install and maintain a halogenated extinguishing agent system or portable fire extinguishers.

105.5.70 Halogenated hydrocarbons. A permit is required for the storage or use of halogenated hydrocarbons.

105.5.71 Hazardous materials. A permit is required to store, transport on site, dispense, use or handle hazardous materials in quantities equal or greater than the amounts listed in Table 105.5.70.

TABLE 105.5.71
PERMIT AMOUNTS FOR HAZARDOUS MATERIALS

TYPE OF MATERIAL	AMOUNT
Carcinogens	
Liquids	1 gallon
Solids	10 pounds
Combustible liquids	See Section 105.5.62
Corrosive materials	
Gases	See Section 105.5.38
Liquids	55 gallons
Solids	550 pounds
Explosive materials	Any Amount
Flammable materials	
Gases	See Section 105.5.38
Liquids	See Section 105.5.62
Solids	100 pounds
Cryogenics	See Section 105.5.42
Highly toxic materials	
Gases	See Section 105.5.38
Liquids	Any Amount
Solids	Any Amount
Irritants	
Liquids	55 gallons
Solids	550 pounds
Other Health Hazards	
Liquids	55 gallons
Solids	550 pounds
Oxidizing materials	
Gases	See Section 105.5.38
Liquids	
Class 4	Any Amount
Class 3	10 pounds[a]
Class 2	100 pounds
Class 1	550 pounds
Solids	
Class 4	Any Amount
Class 3	10 pounds[a]
Class 2	100 pounds
Class 1	550 pounds
Cryogenics	See Section 105.5.42
Organic peroxides	

Liquids	
Class I	Any Amount
Class II	Any Amount
Class III	10 pounds
Class IV	20 pounds
Class V	No Permit Required
Solids	
Class I	Any Amount
Class II	Any Amount
Class III	10 pounds
Class 1V	20 pounds
Class V	No Permit Required
Pyrophoric materials	
Gases	See Section 105.5.38
Liquids	Any Amount
Solids	Any Amount
Radioactive materials	
Not sealed	1 microcurie
Sealed	1 millicurie
Sensitizers	
Liquids	55 gallons
Solids	550 pounds
Toxic materials	
Gases	See Section 105.5.38
Liquids	Any Amount
Solids	Any Amount
Unstable (reactive) materials	
Liquids	
Class 4	Any Amount
Class 3	Any Amount
Class 2	10 pounds
Class 1	100 pounds
Solids	
Class 4	Any Amount
Class 3	Any Amount
Class 2	10 pounds
Class 1	100 pounds
Water-reactive materials	
Liquids	
Class 3	Any Amount
Class 2	50 pounds
Class 1	100 pounds
Solids	
Class 3	Any Amount
Class 2	50 pounds
Class 1	100 pounds
Biohazard	Any Amount

For SI: 1 gallon=3.785L, 1 pound=0.454 kg.

a. 200 pounds when Table 5003.1.1(1) Note k applies and hazard identification signs in accordance with Section 5003.5 are provided for quantities of 200 pounds or less.

105.5.72 Hazardous materials inventory statement plan review. A permit is required for review and comment of any HMIS.

105.5.72.1 HMIS – with less than 10 entries.

105.5.72.2 HMIS – with 10 or more entries.

105.5.73 Hazardous production materials. A permit is required to store, handle or use hazardous production materials.

105.5.74 Hazardous waste generator. A permit is required for any operation that generates hazardous waste.

105.5.7374.1 Contingency plan review. A review of contingency plans is required for any operation that generates any amount of hazardous waste.

105.5.75 Heliports and helistops. A permit is required for the operation of any heliport or helistop.

105.5.76 High-piled storage. A permit is required to use a building or portion thereof as a high-piled storage area of 500 square feet (46 m^2) or more.

105.5.77 Holiday decorations in public assembly occupancies. A permit is required to use any holiday decorations – natural vegetation, crepe paper, etc. in any public assembly occupancy.

105.5.78 Hot work operations. A permit is required for hot work including, but not limited to:

1. Public exhibitions and demonstrations where hot work is conducted.
2. Use of portable hot work equipment inside a structure.
3. Fixed-site hot work equipment such as welding booths.
4. Hot work conducted within a hazardous fire area.
5. Application of roof coverings with the use of an open-flame device.
6. Cutting and welding.

105.5.79 Hypergolic materials. A permit is required to store or use any amount of hypergolic materials.

105.5.79 80 Industrial trucks. A permit is required for all industrial trucks in accordance with NFPA 505.

105.5.81 Inert gas systems used in commercial, manufacturing or industrial applications. A permit is required for the use of inert gas systems with more than 100 pounds (45.4 kg) of an inert gas or any system using any amount of an inert gas below grade used in a commercial, manufacturing or industrial application, such as water treatment with pH balancing, food processing or laboratories.

105.5.82 Insecticides/pesticides/fumigants. A permit is required to apply, sell and manufacture insecticides, pesticides or fumigants.

105.5.82.1 One location/one time

105.5.82.2 Annual/multiple locations

105.5.82 83 Interim permit. An interim permit may be issued allowing work under restrictions or conditions while awaiting submittal of installation documents.

105.5.84 Interior fire alarm system maintenance. A permit is required to maintain fire alarm equipment.

105.5.85 Laboratories. A permit is required to operate a laboratory that stores or uses hazardous materials or flammable substances.

105.5.86 Limited fueling and other fuel transport operations. A permit is required for each vehicle *approved* for limited fueling and fuel transport operations.

105.5.87 Liquefied chlorine. A permit is required to store, use, sell and transport liquefied chlorine.

105.5.88 Liquefied- or gas-fueled vehicles or equipment in assembly buildings. A permit is required to display, operate or demonstrate liquid- or gas-fueled vehicles or equipment in assembly buildings.

105.5.89 Liquefied petroleum gas (LPG). A permit is required for:

105.5.89.1 Operate/maintain any container or system

105.5.89.2 Limited operations/construction sites

105.5.89.3 Roofing operations

105.5.89.4 Operation of cargo tankers that transport LP gas

105.5.89.5 Operation of an automated cylinder exchange station

105.5.90 Lubricating oils. A permit is required to transport, store, sell or use 100 gallons or more of lubricating oils.

105.5.91 Lumber yards. A permit is required for the storage or processing of lumber of 100,000 board feet (8,333 cubic feet) (236 m^3) or more.

105.5.92 Magnesium. A permit is required to melt, cast, heat treat or grind 10 pounds (4.54 kg) or more of magnesium.

105.5.93 Marijuana operations.

105.5.93.1 Carbon dioxide (CO_2) enrichment process (use). A permit is required for a marijuana CO_2 enrichment process. See Section 105.5.27.2.

105.5.93.2 Compressed gas use and storage. A permit is required for the use and storage of compressed gas in a marijuana facility. See Section 105.5.38.

105.5.93.3 Extraction process. A permit is required for a marijuana extraction process.

105.5.93.4 Fumigation. A permit is required for fumigation in a marijuana facility. See Section 105.5.67.

105.5.93.5 Hazardous materials use and storage. A permit is required for the use and storage of hazardous materials in a marijuana facility.

105.5.93.6 Liquefied petroleum gas (LPG) – butane transfilling operations. A permit is required for LPG-butane transfilling operations in a marijuana facility.

105.5.93.7 Liquefied petroleum gas (LPG) use and storage. A permit is required for the use and storage of liquefied petroleum gas in a marijuana facility.

105.5.93.8 Medical marijuana center (dispensary). A permit is required for a medical marijuana center (dispensary).

105.5.93.9 Medical marijuana infused product (kitchen). A permit is required for a medical infused product kitchen.

105.5.93.10 Medical marijuana optional premise cultivation. A permit is required for medical marijuana optional premise cultivation.

105.5.93.11 Pesticide inventory statement. A permit is required for a pesticide inventory statement for a marijuana facility.

105.5.93.12 Private cultivation. A permit is required for private marijuana cultivation.

105.5.93.13 Private extraction. A permit is required for private marijuana extraction operations.

105.5.93.14 Retail cultivation. A permit is required for retail marijuana cultivation.

105.5.93.15 Retail product manufacturing. A permit is required for retail marijuana product manufacturing.

105.5.93.16 Retail store. A permit is required for a retail marijuana store.

105.5.93.17 Retail testing facility. A permit is required for a retail marijuana testing facility.

105.5.94 Matches. A permit is required for bulk storage of matches.

105.5.95 Medical gas systems. A permit is required for each medical gas system.

105.5.96 Mobile food vending—fuels, generators, hood extinguishing systems, etc. A permit is required for a mobile food vending operation.

105.5.96.1 Compressed gas.

105.5.96.2 Generators.

105.5.96.3 Hood extinguishing system.

105.5.97 Motor fuel dispensing facilities. A permit is required for operation of automotive and marine motor fuel-dispensing facilities. Fuel is calculated and assessed separately.

105.5.97.1 Flammable and combustible liquids.

105.5.97.2 Compressed natural gas (CNG).

105.5.97.3 Liquefied petroleum gas (LPG).

105.5.97.4 Hydrogen.

105.5.98 Motor fuel dispensing facilities – Fleet/private service. A permit is required for operation of fleet or private motor fuel dispensing facilities. Fuel calculated and assessed separately.

105.5.81 Flammable and combustible liquids.

105.5.98.2 Compressed natural gas (CNG).

105.5.98.3 Liquefied petroleum gas (LPG).

105.5.98.4 Hydrogen.

105.5.99 Motor fuel storage systems. A permit is required for certification to install, test, alter, repair or remove equipment.

105.5.100 Motorcycle vehicle repair shops. A permit is required to operate a motorcycle vehicle repair shop.

105.5.101 Nitrous oxide-piped systems. A permit is required to maintain a nitrous oxide-piped system.

105.5.102 Occupant load increase. A permit is required to increase the occupant load of an assembly occupancy. The maximum increase shall be 10 percent when egress, seating, etc. remain in compliance with this code. This permit shall be for one event only.

105.5.103 Open flame. A permit is required for any open flame equipment.

105.5.104 Open flames and torches. A permit is required to remove paint with a torch; or to use a torch or open-flame device in a hazardous fire area.

105.5.105 Open flame on aircraft servicing ramp. An annual permit is required to use any open flame equipment on an aircraft fuel service ramp.

105.5.106 Organic coatings. A permit is required for any organic-coating manufacturing operation producing one gallon (4L) or more of an organic coating in one day.

105.5.107 Ovens (industrial baking or drying). A permit is required for operation of industrial ovens regulated by Chapter 30.

105.5.108 Ozone generator. A permit is required to operate an ozone generator.

105.5.109 Pallet storage. A permit is required for indoor or outdoor pallet storage of 2,000 square feet or more.

105.5.110 Parade floats. A permit is required for any parade float ground or airborne.

105.5.111 Places of assembly. A permit is required to operate a place of assembly.

105.5.111.1 Occupant load > 150 but < 300

105.5.111.2 Occupant load 300 - 2500

105.5.111.3 Occupant load > 2500

105.5.112 Plan review. A permit is required for plan review as follows:

105.5.112.1 Development plan review – assessed in half-hour increments

105.5.112.2 Pre-plan submittal consultation – assessed in half-hour increments

105.5.112.3 HMIS, HMMP and hazardous materials generation

105.5.112.4 Expedited plan review – assessed in half-hour increments

105.5.112.5 Subsequent plan submittals – 3rd and subsequent submittals

105.5.113 Plant husbandry. A permit is required for the operation of a plant husbandry facility.

105.5.114 Plastic foam products (flammable). A permit is required to store and use over 1,000 pounds.

105.5.115 Powder coating (See Spray booth for powder coating).

105.5.116 Pressure vessels. A permit is required to use a pressure vessel.

105.5.117 Private fire hydrants. See Fire hydrants and valves.

105.5.118 Pyrophoric materials. A permit is required to store or use pyrophoric materials.

105.5.119 Pyrotechnic special effects material. A permit is required for use and handling of pyrotechnic special effects material.

105.5.120 Pyrotechnic event. A permit is required for all pyrotechnic events.

105.5.120.1 After-hours inspection.

105.5.120.2 Use of fog machine.

105.5.120.3 Indoor/Outdoor pyrotechnic event.

105.5.120.4 Use of propane effects.

105.5.120.5 Pyrotechnic inspector during event. (Paid by promoter as after-hours inspection).

105.5.121 Pyrotechnician. A permit/certificate of fitness is required for all pyrotechnicians.

105.5.122 Pyroxylin plastics. A permit is required for storage or handling of 25 pounds (11 kg) or more of cellulose nitrate (pyroxylin) plastics and for the assembly or manufacture of articles involving pyroxylin plastics.

105.5.123 Radioactive material. A permit is required to store, use or handle radioactive material.

105.5.124 Recycling facilities. A permit is required to operate a recycling facility.

105.5.125 Refrigeration equipment. A permit is required to operate a mechanical refrigeration unit or system regulated by Chapter 6.

105.5.126 Repair garages A permit is required for operation of major repair garages as defined in NFPA 30A.

105.5.127 Reviewing stands/grandstands. A permit is required to erect and use reviewing stands or grandstands.

105.5.128 Salvage yard. A permit is required to operate a salvage yard, not including other permits required by this code.

105.5.129 Special conditional permit. A permit is required for special conditions, such as confined spaces, vacated areas, abandoned tanks, etc.

105.5.130 Special events. A permit is required for special events.

105.5.130.1 Places of assembly – any hazardous material or process at temporary events.

105.5.130.2 Places of assembly – refueling operations at temporary events in assembly occupancies.

105.5.130.3 Places of assembly – storage, use and handling of flammable/combustible liquids at temporary events.

105.5.130.4 Places of assembly – storage, use and handling of compressed gases at temporary events.

105.5.130.5 Event within existing facility.

105.5.130.6 Plan submittal less than 14 days prior to event.

105.5.130.7 Outdoor with six or more fuel-fired cooking/heating units.

105.5.131 Special extinguishing system. A permit is required to maintain a special extinguishing system.

105.5.132 Special fire alarm system. A permit is required to maintain a special fire alarm system.

105.5.133 Special spray application projects. A permit is required for applying flammable or combustible finishes to the interior of a structure.

105.5.134 Spray booth for powder coating. A permit is required to use a spray booth for powder coating.

105.5.135 Spraying or dipping. A permit is required to conduct a spraying or dipping operation utilizing flammable or combustible liquids regulated by Chapter 57.

105.5.135.1 One time/one location.

105.5.135.2 Annual/various locations.

105.5.135.3 Booth or room.

105.5.135.4 Limited spraying spaces.

105.5.136 Spraying of water-based finishes. A permit is required to conduct a spraying operation utilizing water-based liquids.

105.5.137 Storage containers.

105.5.137.1 Temporary – less than 180 days.

105.5.137.2 Permanent – 180 days or longer.

105.5.138 Storage of scrap tires and tire by-products. A permit is required to establish, conduct or maintain storage of scrap tires and tire byproducts of 2,500 cubic feet (566 m^3) or more total volume of scrap tires and for indoor storage of tires and tire byproducts.

105.5.139 Stored electrical energy emergency/standby power systems. A permit is required to install or operate stored electrical energy emergency/standby power systems.

105.5.140 Sulphur/Sulphur chloride. A permit is required to store, sell or use sulphur or sulphur chloride.

105.5.141 Supervising station/central station. A permit is required to receive fire alarm signals from a protected property.

105.5.142 Tanks (Change of content). A permit is required to change the contents of a chemical or fuel storage tank.

105.5.143 Temporary fire standpipe. A permit is required to install and maintain a temporary fire standpipe.

105.5.144 Temporary generator. A permit is required to use a temporary generator.

105.5.145 Temporary heating appliance. A permit is required to install or use a temporary heating appliance.

105.5.145.1 Temporary space heating appliances (electric) in existing buildings – all permits must be obtained from designated *fire code official* via building ownership or management.

105.5.146 Tents or temporary membrane structures. See Section 3103.2.

105.5.146.1 Tent or temporary membrane structure - not open on all sides and having an area in excess of 200 square feet.

105.5.146.2 Tent or temporary membrane structure - open on all sides and having an area of 400 square feet or more.

105.5.147 Tire rebuilding/recapping plants. A permit is required for the operation and maintenance of a tire rebuilding or recapping plant.

105.5.148 Tire shredding. A permit is required for operations involving shredding of tires.

105.5.149 Tire storage. A permit is required for tire storage of 2500 cubic feet or more in any one control area.

105.5.150 Trailer. A permit is required for trailers used for office functions.

105.5.150.1 Temporary – less than 180 days.

105.5.150.2 Permanent – 180 days or longer.

105.5.151 Training fees. A permit is required for Fire Department training.

105.5.151.1 High-rise building evacuation exercise.

105.5.151.2 Low-rise building evacuation exercise.

105.5.151.3 Building management/facility manager emergency procedures certification training (per person).

105.5.151.4 Fire extinguisher training (2 hours – does not include extinguisher; limited to 5 persons).

105.5.151.5 Floor warden training (limited to 5 persons).

105.5.151.6 Hazardous materials closure plan.

105.5.151.7 Hazardous materials waste generation plan.

105.5.151.8 Hazardous materials inventory statement training (2 hours; limited to 5 persons).

105.5.151.9 Hazardous materials management plan (2 hours; limited to 5 persons).

105.5.151.10 Hazardous materials release mitigation training (2 hours; limited to 10 persons).

105.5.151.11 Safety and evacuation training (2 hours; limited to 10 persons).

105.5.151.12 Fire safety public education presentation.

105.5.152 Underground hazardous material storage tanks. A permit is required to maintain an underground hazardous material storage tank (per tank).

105.5.153 Underground spaces. A permit is required to inspect and certify underground spaces.

105.5.154 Vacant properties. A permit is required for vacant properties.

105.5.155 Varnishes. A permit is required to store or use varnish.

105.5.156 Waste material handling plant. A permit is required to operate waste material handling plants, wrecking yards, junk yards and waste material-handling facilities.

105.5.157 Waste receptacles. A permit is required to install and maintain waste receptacles with a capacity greater than 20 cubic feet.

105.5.158 Waxes. A permit is required to store, sell or use 400 pounds of wax or more.

105.5.159 Wood products. A permit is required to store 200 cubic feet or more of wood products.

105.5.160 Wooden packing boxes, cases and barrels (empty). A permit is required to store 2,000 cubic feet. or more.

105.5.161 Woodworking operations. A permit is required to operate a woodworking operation that meets one of the following criteria:

1. has more than three fixed or table-mounted wood sawdust-producing pieces of equipment, or

2. has a floor area greater than 2,500 square feet, or

3. has a room or building considered to be an explosion hazard based on dust accumulations exceeding 1/8-inch or a visible dust cloud.

Section 105.6 Required construction permits and all of its subsections are replaced in their entirety as follows:

105.6 Required construction permits. The *fire code official* is authorized to issue construction permits for work as set forth in Sections 105.6.1 through 105.6.34. Permit submittals shall bear the seal and signature of the *design professional* in accordance with DORA Rules and Regulations and Appendix O.

The process of application, submittal, securing of the construction permit (including fees) and obtaining inspections shall comply with this code and Section 1 (Administration) of the 2022 Denver Building Code.

105.6.1 Appliances fueled by waste petroleum products. A construction permit is required to install appliances fueled by waste petroleum products.

105.6.2 Automatic fire extinguishing systems. A construction permit is required prior to the installation or modification of automatic fire extinguishing systems including firelines. Water supply infrastructure including hydrants must obtain DFD approvals via Water Plan submittals (epermits); however, final permitting is approved by Denver Water. Firelines must be completed by Licensed underground contractors and permitted/inspected via dedicated Fireline permits primarily obtained as Quick Permits.

Work performed to keep equipment operable or to make repairs is considered maintenance and requires a permit:

Exceptions:

1. A required permit may be acquired after work is performed on an emergency basis to maintain an existing fire extinguishing system. The penalties stated herein shall not apply if the emergency permit application is submitted within two normal business days after commencement of the emergency work. A full permit application is required within ten normal business days after commencement of the emergency work.

2. With written approval from the *fire code official* prior to commencement of the work, maintenance performed in accordance with this code shall not require a permit.

3. Minor work not impacting the mechanics of the system including gauge replacement, leaking sprinkler replacement (less than 3), hydraulic placard replacements, single hose valve replacement (not including PRV's), turn wheel replacements, escutcheon replacements, hangar replacements/repairs, etc.

105.6.3 Carbon dioxide (CO_2)

105.6.3.1 Carbon dioxide (CO_2) systems used in beverage dispensing applications. A construction permit is required for the installation of carbon dioxide (CO_2) systems with more than 100 pounds (45.4 kg) of carbon dioxide or any system using any amount of carbon dioxide (CO_2) below grade used in beverage dispensing applications.

105.6.3.2 Carbon dioxide (CO_2) gas enrichment systems using on-site supply tanks and/or cylinders in plant growing (husbandry) applications. A construction permit is required for the installation of carbon dioxide enrichment systems with more than 100 pounds (45.4 kg) of carbon dioxide or any system using any amount of carbon dioxide (CO_2) below grade used in plant growing (husbandry) applications.

105.6.3.3 Carbon dioxide (CO_2) gas enrichment systems using a natural gas burner in plant growing (husbandry) applications. A construction permit is required for the installation of natural gas burners that are utilized to generate carbon dioxide (CO_2) in plant growing (husbandry) applications.

105.6.4 Cellular / Wireless signal repeater site. A construction permit is required to install a cellular/wireless signal repeater site.

105.6.5 Compressed gases. When the compressed gases in use or storage exceed the amounts listed in Table 105.5.38, a construction permit is required to install, repair damage to, abandon, remove, place temporarily out of service, or close or substantially modify a compressed gas system.

Exceptions:

1. Routine maintenance.
2. For emergency repair work performed on an emergency basis, application for permit shall be made within two working days of commencement of work.

105.6.6 Compressed natural gas (CNG). A construction permit is required to install, modify or remove a compressed natural gas tank.

105.6.7 Conveyances. Construction permits are required for the installation, alteration, modification, removal, maintenance, and testing of all elevators and conveyances within the City and County of Denver. Shop and/or layout drawings shall be submitted for review and approval prior to issuance of permits. Drawings shall comply with ASME A17.1 and DFD policy. Two sets of specifications and accurately scaled and fully dimensioned construction plans shall be provided in accordance with Appendix O. These plans shall include the applicable code edition which shall conform to the edition of the code currently adopted and shall include specifications of interior cab materials or indication on the plans that interior cab work is to be completed by others. Permits issued shall be displayed in the conveyance control room or control space associated with the permitted conveyance. See also Section 920 for additional requirements.

105.6.7.1 Conveyance Permits. The Denver Fire Department Conveyance Section shall be notified by a responsible party from the conveyance contractor or the permit applicant upon the completion of the scope of work set forth in the issued and *approved* permit. Notification to Denver Fire Conveyance Section shall be in written format and include the signature of the permit applicant. Notification shall include all known variances or deviations from the scope of work submitted for approval. Notification shall be submitted prior to or on the expiration date of the issued permit. If for any reason the original permit applicant is unable to complete the scope of work specified in the permit and the work is to be completed by a contractor other than the original, a new permit must be applied for and obtained by the conveyance contractor who will complete the specified scope of work.

105.6.8 Cryogenic fluids. A construction permit is required to install, repair damage to, abandon, remove, place temporarily out of service, close or substantially modify an outdoor stationary cryogenic fluid storage system where the system capacity exceeds the amounts listed in Table 105.5.42. Maintenance performed in accordance with this code is not considered a modification and does not require a permit.

105.6.9 Energy storage systems. A construction permit is required to install energy storage systems regulated by Section 1207

105.6.10 Fire alarm and detection systems and related equipment. A construction permit is required prior to the installation or modification of fire alarm and detection systems and related equipment. Work performed to keep equipment operable or to make repairs is considered maintenance and requires a construction permit. Construction permits are required for any work to the following systems:

1. Emergency alarm systems.
2. Emergency communication systems (ECS).
3. Mass notification systems.
4. Public safety radio communication systems (RES).
5. Two-way communication systems.
6. Gas detection systems.
7. Refrigerant leak detection systems.

Exceptions:

1. A required permit may be acquired after work is performed on an emergency basis to maintain an existing fire alarm or detection system. The penalties stated herein shall not apply if the emergency permit application is submitted within two normal business days after commencement of the emergency work. A full permit application is required within ten normal business days after commencement of the emergency work.
2. With written approval from the *fire code official* prior to the work, maintenance performed in accordance with this code may not require a permit.

105.6.11 Fire pumps and related equipment. A construction permit is required prior to the installation or modification of fire pumps and related fuel tanks, jockey pumps and controllers. Work performed to keep equipment operable or to make repairs is considered maintenance and requires a permit.

Exceptions:

1. A required permit may be acquired after work is performed on an emergency basis to maintain an existing fire pump. The penalties stated herein shall not apply if the emergency permit application is submitted within two normal business days after commencement of the emergency work. A full permit application is required within ten normal business days after commencement of the emergency work.
2. With written approval from the *fire code official* prior to the work, maintenance performed in accordance with this code shall not require a permit.

3. Minor work not impacting the mechanics of the systems including gauge replacement, driver oil/lube job, hydraulic placard replacements, light bulb replacement, battery replacement, fuel treatment, packing adjustments, etc.

105.6.12 Flammable and combustible liquids. A construction permit is required:

1. To repair or modify a pipeline for the transportation of flammable or combustible liquids.
2. To install, construct or alter tank vehicles, equipment, tanks, plants, *terminals*, wells, fuel-dispensing stations, refineries, distilleries and similar facilities where flammable and combustible liquids are produced, processed, transported, stored, dispensed or used.
3. To install, alter, remove, abandon or otherwise dispose of a flammable or combustible liquid tank.

105.6.13 Gates and barricades across fire apparatus access roads. A construction permit is required for the installation of or modification to a gate or barricade across a *fire apparatus access road*.

105.6.14 Generator Set. A construction permit is required to install the following fueled generator set(s) with or without an integral tank.

105.6.14.1 Fuel Oil

105.6.14.2 Natural Gas

105.6.15 Hazardous materials. A construction permit is required to install, repair damage to, abandon, remove, place temporarily out of service, or close or substantially modify a storage facility or other area (including but not limited to tanks) regulated by Chapter 50 when the hazardous materials in use or storage exceed the amounts listed in Table 105.5.71.

Exceptions:

1. Routine maintenance.
2. For emergency repair work performed on an emergency basis, application for permit shall be made within two working days of commencement of work.

105.6.16 High-piled combustible storage. A construction permit is required for the installation or reconfiguration of all high-piled storage systems.

105.6.17 Industrial ovens. A construction permit is required for installation of industrial ovens covered by Chapter 30.

Exceptions:

1. Routine maintenance.
2. For repair work performed on an emergency basis, application for permit shall be made within two working days of commencement of work.

105.6.18 Inert gas systems used in commercial, manufacturing or industrial applications. A construction permit is required for the use of inert gas systems with more than 100 pounds (45.4 kg) of an inert gas or any system using any amount of an inert gas below grade used in a commercial, manufacturing or industrial application, such as water treatment with pH balancing, food processing or laboratories.

105.6.19 LP-gas. A construction permit is required for installation of or modification to an LP gas system.

105.6.19.1 Cage An installation permit is required to install a cage for storage of portable LP gas containers awaiting use or resale.

105.6.19.2 Tank A construction permit is required to install, repair damage to, abandon, remove or place temporarily out of service an LP gas tank.

105.6.19.3 Automated cylinder exchange station. A construction permit is required to install an automated cylinder exchange station.

105.6.20 Nitrous oxide-piped systems. A construction permit is required to install nitrous oxide-piped systems.

105.6.21 Ozone generator. A construction permit is required to install an ozone generator.

105.6.22 Powder coating. A construction permit is required to install a spray booth for powder coating.

105.6.23 Phased Occupancy for TCO. A construction permit is required to obtain approval for a phased occupancy approach of a new building. Visit Denver Fire Department website to obtain Phased Occupancy Policy outlining requirements and procedures to satisfy Section 901.5.1.

105.6.24 Pressure vessel. A construction permit is required to install a pressure vessel.

105.6.25 Private fire hydrants. A construction permit is required for the installation or modification of private fire hydrants.

105.6.26 Process piping. A construction permit is required to install, repair or modify piping systems and their component parts (piping, tubing, valves and fittings) that convey hazardous materials including flammable and combustible liquids.

105.6.27 Refrigeration equipment. A construction permit is required for a mechanical refrigeration unit or system regulated by Chapter 6.

105.6.28 Repair /garages. A construction permit is required to install a repair garage operation.

105.6.29 Smoke control systems. A construction permit is required for the installation, modification, or removal from service of a smoke control system, including fans, controllers (VFD's), ductwork, fire/smoke dampers, annunciators, and associated controls. Work performed to keep equipment operable or to make repairs is considered maintenance and requires a construction permit.

Exceptions:

1. A required permit may be acquired after work is performed on an emergency basis to maintain an existing smoke control system. The penalties stated herein shall not apply if the emergency permit application is submitted within two normal business days after commencement of the emergency work. A full permit application is required within ten normal business days after commencement of the emergency work.
2. With written approval from the *fire code official* prior to the work, maintenance performed in accordance with this code shall not require a permit.
3. Minor repair work not impacting the safety fucntion, infrastructure or software of the system such as like for like replacement of damper acutatuor (not more than 3), damper linkage and door closures

105.6.30 Spraying or dipping. A construction permit is required to install or modify a spray room, dip tank or booth.

105.6.31 Standpipe systems. A construction permit is required for the installation, modification, or removal from service of a standpipe system. Work performed to keep equipment operable or to make repairs is considered maintenance and requires a permit.

Exceptions:

1. A required permit may be acquired after work is performed on an emergency basis to maintain an existing standpipe system. The penalties stated herein shall not apply if the emergency permit application is submitted within two normal business days after commencement of the emergency work. A full permit application is required within ten normal business days after commencement of the emergency work.
2. With written approval from the *fire code official* prior to the work, maintenance performed in accordance with this code shall not require a permit.
3. Minor work not impacting the mechanics of the system such as gauge replacement, hydraulic placard replacements, single hose valve replacement (not including PRV's), turn wheel & cap replacements, hangar replacements/repairs, etc.

105.6.32 Temporary membrane structures, tents, canopies and special event structures. A construction permit is required to erect an air-supported temporary membrane structure or a tent having an area of 400 square feet (37 m^2) or more.

Exceptions:

1. Tents used exclusively for recreational camping purposes.
2. Funeral tents and curtains or extensions attached thereto, when used for funeral services.
3. Fabric canopies and awnings open on all sides which comply with all of the following:
   a. Individual canopies shall have a maximum size of 700 square feet (65 m^2).
   b. The aggregate area of multiple canopies placed side by side without a fire break clearance of not less than 12 feet (3658 mm) shall not exceed 700 square feet (65 m^2) total.
   c. A minimum clearance of 12 feet (3658 mm) to structures and other tents shall be maintained.

105.6.33 Underground and above-ground hazardous materials storage tanks. A construction permit is required to install any hazardous materials storage tank.

105.6.34 Woodworking operations. A construction permit is required to install a woodworking operation.

SECTION 107
FEES

Section 107.2 Schedule of permit fees is amended by replacing it in its entirety as follows:

107.2 Schedule of permit fees. A fee necessary to cover administrative costs of inspection, licensing, record-keeping, and other requirements for all fire prevention programs under this Code shall be paid in accordance with fee schedules established by the Executive Director of the Department of Public Safety.

SECTION 108
INSPECTIONS

Sections 108.2.3 Dangerous or hazardous conditions or material through 108.2.13 Townhomes, condominiums and apartments are added as follows:

108.2.3 Dangerous or hazardous conditions or material. The *fire code official* shall have the authority to order any person(s) to remove or remedy such dangerous or hazardous condition or material as set forth in this code. Any person(s) failing to comply with such order shall be in violation of this code.

108.2.4 Right of entry. The *fire code official* shall be authorized to inspect any building or premises for dangerous or hazardous conditions or materials as set forth in this code. Before entering, the *fire code official* shall obtain the consent of the occupant thereof or obtain a court warrant authorizing entry for the purpose of inspection except in those instances where an emergency exists.

108.2.5 Emergency. As used in Section 108.2.4, "emergency" means circumstances that the *fire code official* knows, or has reason to believe, exist and can constitute immediate danger to life and property.

108.2.6 Authorized personnel. Uniformed fire inspectors, fire investigators, and fire protection engineers shall be authorized to enter and inspect buildings, structures, vessels, vehicles, and premises as herein set forth. They shall be identified by credentials issued by the Department of Public Safety.

108.2.6.1 Impersonation. Persons shall not use a badge, uniform, or other credentials to impersonate the *fire code official*.

108.2.7 Hazardous conditions. Where conditions exist and are deemed hazardous to life and property by the *fire code official*, the *fire code official* shall have the authority to summarily abate such hazardous conditions that are in violation of this code.

108.2.8 Plans and specification. The *fire code official* shall have the authority to require plans and specifications to ensure compliance with applicable codes and standards. The plans and specifications shall bear the stamp of a design professional

108.2.9 Inspection of construction and installation. The *fire code official* shall be notified by the person performing the work when the installation is ready for a required inspection or for fire protection or other life safety systems acceptance tests. All installations shall be complete prior to requesting an inspection or test. All components of a life safety system shall be installed prior to testing—no exceptions.

108.2.9.1 Work in violation. When any construction or installation work is being performed in violation of the plans and specifications *approved* by the *fire code official*, a written notice shall be issued to the responsible party to stop work on that portion of the work that is in violation. The notice shall state the nature of the violation, and no work shall be continued on that portion until the violation has been corrected.

108.2.10 Stop work or evacuation. The *fire code official* shall have the authority to order an operation or use stopped and the immediate evacuation of any occupied building, area of a building, or other property when such building, area of a building, or other property has hazardous conditions that present imminent danger.

108.2.10.1 Non-complying work. Whenever any work is being done contrary to provisions of this code, the *fire code official* is hereby authorized to order such work stopped. Such work should immediately stop until authorized by the *fire code official* to proceed.

108.2.11 Standby personnel. When, in the opinion of the *fire code official*, it is essential for public safety in a tent, canopy or membrane structure used as a place of assembly or any other use where people congregate, or any building, premises or property where people congregate, because of the number of persons, or the nature of the performance, exhibition, display, contest or activity, or when potentially hazardous conditions exist, or an occupant load varies due to large crowd movement from one building to another building or one area of a building to another area of the building, or there is a reduction in a life safety feature, or there is an impairment to a fire protection feature, the owner, agency or lessee shall employ and compensate through *approved* Department of Public Safety channels at a rate established by the Executive Director of the Department of Public Safety one or more firefighters of the City and County of Denver, as required by the *fire code official*. Such firefighter(s) shall be subject to the *fire code official*'s orders at all times when so employed and shall be in uniform and remain on duty during the times such places are open to the public or when such activity is being conducted or, in the case of residential occupancies, whenever occupied.

108.2.11.1 Owner's responsibility. The owner, agent, or lessee shall employ standby fire personnel in an adequate number determined by the *fire code official* based on the potential hazard or reduction in a fire protection system or other life safety feature as described in Section 108.2.11, as required and *approved*, to be on duty. Such standby fire personnel or fire watch personnel shall be subject to the *fire code official*'s orders at all times and shall be identifiable and remain actively on duty during the times such places are open to the public, when such activity is being conducted, or in residential buildings, whenever occupied.

108.2.12 Records. The Fire Prevention Division shall retain, for the life of the building or structure, a record of each inspection made showing the findings and disposition of each inspection made.

108.2.13 Townhouses, condominiums and apartments. Portable fire extinguishers shall be mounted on the exterior at each level stairway(s) or one (2A:10BC) within each residential unit. When mounted on the exterior, the property management/homeowner's association (HOA) shall be responsible for the care, maintenance and recharging, and use of the fire extinguisher, including inspection. The homeowner shall submit a report to the property management (HOA) on an annual basis. Portable fire extinguishers shall be located, inspected and maintained in accordance with NFPA 10. The smoke alarms within the residential units shall be tested and maintained in accordance with NFPA 72. The carbon monoxide detectors shall be located, inspected, tested and maintained in accordance with NFPA 720. The homeowner shall submit a report to the property management/HOA on an annual basis of each test and battery replacement. The property management/HOA shall maintain a log of the inspection/test reports submitted to that office and Denver Fire Department Inspection personnel will review that log prior to conducting the inspection. If this information is not available, an inspection shall be made to determine that this equipment is in compliance with this code.

Section 108.5 Frequency of Inspections is added as follows:

108.5 Frequency of inspections. Fire safety inspections for the specific property/operation shall be required at intervals established by the *fire code official* but not to exceed once every 12 months.

Section 108.6 Special inspections is added as follows:

108.6 Special inspections. The *fire code official* is authorized to conduct special inspections, including fire safety inspections and systems acceptance testing, outside of normal business hours as deemed necessary to determine the extent of compliance with the provisions of this Code. The fire safety inspections and systems acceptance testing shall be performed by Denver Fire Department Fire Prevention personnel certified to the level of National Fire Protection Association Fire Inspector II and Department Fire Protection Engineer. The property owner, property manager, or contractor shall reimburse the City and County of Denver at the hourly rate established by the Executive Director of the Department of Public Safety. Special inspections outside of normal business hours shall be a minimum of three hours Monday through Friday and a minimum of four hours on weekends and designated City holidays.

SECTION 109
MAINTENANCE

Section 109.7 Fire watch personnel, 109.7.1 Owner's responsibility and 109.7.2 Permit required are added as follows:

109.7 Fire watch personnel. When in the opinion of the *fire code official* it is essential for public or occupant safety, because of potentially hazardous conditions or a reduction in safety due to the occupant load, crowd movement, type of performance, display, exhibit, use, contest, activity; impairment to a fire protection or other life safety system; or any similar condition, the *fire code official* shall have the authority to require a fire watch in any building, premises or property.

109.7.1 Owner's responsibility. The owner, agent, or lessee shall employ personnel for fire watch in adequate numbers as determined by the *fire code official* based on the potential hazard or reduction in safety described in Section 109.7. When required by the *fire code official*, uniformed City and County of Denver firefighters shall be employed through the Department of Safety and compensated at a rate established by the Executive Director of the Department of Public Safety. Fire watch personnel shall be subject to the *fire code official*'s orders at all times and shall be identifiable and remain actively on duty during the times specified by the *fire code official*.

109.7.2 Permit required. Permits shall be required as set forth in Section 105.5.60.

SECTION 111
MEANS OF APPEALS

Section 111.1 Means of appeals is replaced in its entirety as follows:

111.1 Appeals. Either the Executive Director of the Department of Public Safety, or if delegated by the Director, a board of appeals may hear and decide appeals of orders, decisions, or determinations made by the *fire code official* relative to the application and interpretation of this Code. The board of appeals shall consist of members who are qualified by experience and training to make decisions pertinent to hazards of fire, explosions, hazardous conditions, flammable and combustible liquids and gases, the use, storage and production of hazardous materials, or fire protection and other life safety systems and features.

111.1.1 Application. Prior to any action by the Executive Director of the Department of Public Safety, an application in writing shall be filed in the office of the Director within 30 days after receiving the order, decision, or determination made by the *fire code official* on a form provided by the Director providing the necessary information required. A copy of such application shall be furnished to the *fire code official* by the applicant. Payment of the fee established by the Executive Director of the Department of Public Safety, in the form a check made payable to the Denver Manager of Finance, must accompany the application.

111.1.2 Meetings and records. The Executive Director of the Department of Public Safety or Board of Appeals shall keep records of its proceedings showing the vote of each member on every question and the final decision.

111.1.3 Appeal from decision of the Executive Director of the Department of Public Safety. Any person subject to a decision of the Executive Director of the Department of Public Safety may have that decision reviewed in the manner provided by Colorado Rules of Civil Procedure.

Section 111.3 Qualifications is deleted in its entirety.

SECTION 112
VIOLATIONS

Sections 112.3.2.1 Failure to comply through 112.3.2.4 Citation are added as follows:

112.3.2.1 Failure to comply. It shall be unlawful to violate any provisions of this code, or to fail to carry out an order made pursuant to this code or violate any condition attached to a permit, approval, or certificate, or to erect, install, alter, repair or do work in violation of *approved* construction documents, or without the appropriate license, permit or directive of the fire official. Violations shall be punishable as prescribed in Section 1-13(a) of the Denver Revised Municipal Code. It shall be unlawful to fail to pay fees authorized pursuant to this code.

112.3.2.2 Time limits. Failure to comply with the time limits of an abatement notice or after a corrective order or notice of violation is issued by the *fire code official* shall result in each day that such violation continues being regarded as a new and separate violation and a new and separate offense.

112.3.2.3 Not owner-occupied. If the building or other premises is not owner occupied, under lease or otherwise, and the order or notice of violation requires additions or changes in the building or premises that would immediately become real estate and be the property of the owner of the building or premises, such orders or notices shall be complied with by the owner.

Section 112.3.5 Administrative citation is added as follows:

112.3.5 Administrative citation. The *fire code official* is authorized to issue administrative citations for violations of this code.

Section 112.4 Violation penalties is replaced as follows:

112.4 Violation penalties. See Section 112.3.2.1 Failure to comply.

SECTION 114 UNSAFE STRUCTURES OR EQUIPMENT

Section 114.1 General is replaced in its entirety as follows:

114.1 General. If during the inspection of a premises, a building or structure or any building system, in whole or in part, constitutes a clear and inimical threat to human life, safety or health, the *fire code official* shall issue such notice or orders to remove or remedy the conditions as shall be deemed necessary in accordance with this section and shall refer the building to the *building official* for any repairs, alterations, remodeling, removing or demolition required. It shall be unlawful to maintain an unsafe condition in any building.

Section 114.1.1 Unsafe conditions is replaced in its entirety as follows:

114.1.1 Unsafe conditions. Structures or existing equipment that are or hereafter become unsafe, insanitary or deficient because of inadequate means of egress, inadequate light and ventilation, failure to comply with an *approved* occupant load, or which constitute a fire hazard such as storage of explosives, excessive amounts of combustible or flammable materials, vegetation deemed an exposure hazard, manufacture of controlled substances, unstable material, hazardous materials, fire safety system(s) inoperative, etc., or are otherwise dangerous to human life or to the public welfare, or which involve illegal or improper occupancy or inadequate maintenance, shall be deemed an unsafe condition. A vacant structure that is not secured against unauthorized entry shall be deemed unsafe. A structure, including residences, that constitutes a fire hazard and an exposure hazard in the event of fire or explosion shall be deemed unsafe. It shall be unlawful to maintain an unsafe condition or to fail to obey an order of the *fire code official* to correct an unsafe condition. The *fire code official* is authorized to take action to mitigate an unsafe condition, rendering the operation harmless to people or property. The property owner shall be responsible for all costs related to all actions.

Section 114.1.2.1 Unsafe heating or electrical equipment and structural hazards is added as follows:

114.1.2.1 Unsafe heating or electrical equipment and structural hazards. When the *fire code official* deems any chimney, smokestack, stove, oven, incinerator, furnace, or other heating device, electrical fixture, or any appurtenance thereto, or anything regulated under a nationally recognized standard in or upon any building, structure, or premises not specifically mentioned in this code, to be unsafe or defective so as to create a hazard, the *fire code official* is authorized to serve upon the owner or the person having control of the property a written notice to remove or repair or alter as necessary. The *fire code official* is authorized to affix a condemnation tag prohibiting the use thereof, or until such repairs or alterations are made. It shall be unlawful to maintain unsafe heating or electrical equipment and structural hazards or to fail to obey an order of the *fire code official* to correct unsafe heating or electrical equipment and structural hazards.

Section 114.1.2.2 Unsafe operations is added as follows:

114.1.2.2 Unsafe operations. When the *fire code official* deems any operation, interior or exterior, to be unsafe so as to create a hazard, the *fire code official* is authorized to serve upon the owner, contractor, or the person having control of the property, a written notice to remove or repair or alter as necessary. The *fire code official* is authorized to affix a condemnation tag prohibiting the use thereof, or until such repairs or alterations are made. In the event that the unsafe operation resulted in an emergency response, legal action and cost recovery will be directed to the responsible party. It shall be unlawful to maintain unsafe operations or to fail to obey an order of the *fire code official* to correct unsafe operations.

Sections 115 Licenses through 118 Fire alarm monitoring – permits and licenses are added as follows:

SECTION 115
LICENSES

115.1 General. A license is authority granted to the person to whom it is issued to perform the work authorized by the license.

115.2 Licenses required. Denver Fire Department licenses shall be required for the design, installation, modification, inspection, and testing of all life safety and conveyance systems and equipment. All life safety fitters/technicians shall be licensed to design, install, add to, modify, and perform all types of inspections, testing, maintenance, and repair of factory-engineered equipment. Conveyance inspectors and mechanics shall be licensed by the Fire Department per Section 115.3. All persons required to have a permit, license or certificates shall have a current—for calendar year—permit, license or certificate.

115.2.1 Ammonia safety / alarm systems.

115.2.2 Backflow prevention for fire sprinkler systems.

115.2.3 Carbon dioxide extinguishing systems.

115.2.4 Carbon monoxide detection systems.

115.2.5 Carbon monoxide safety / alarm warning systems.

115.2.6 Central station operator.

115.2.7 Central station runner.

115.2.8 Conveyances.

115.2.9 Clean agent fire extinguishing systems.

115.2.10 Department of safety radio enhancement systems.

115.2.11 Dry chemical extinguishing systems.

115.2.12 Electrical signaling and central wiring.

115.2.13 Emergency communication systems.

115.2.14 Fire alarm systems.

115.2.15 Fire detection systems.

115.2.16 Fire doors and other opening protectives.

115.2.17 Foam extinguishing systems.

115.2.18 Fire pumps. Except: Building engineers trained by the service provider to conduct weekly and monthly churn test on fire pumps.

115.2.19 Fire sprinkler systems – NFPA 13.

115.2.21 Fire sprinkler systems – NFPA 13D.

115.2.22 Fire sprinkler systems – NFPA 13R.

115.2.23 Fire standpipe systems – NFPA 14.

115.2.24 Firefighter's emergency elevator recall systems.

115.2.25 Foam extinguishing systems.

115.2.26 Kitchen hood extinguishing systems.

115.2.27 Oxygen coordinator.

115.2.28 Oxygen supply and delivery.

115.2.29 Portable fire extinguishers.

115.2.30 Refrigerant safety / alarm systems.

115.2.31 Rubbish and linen handling systems.

115.2.32 Smoke control systems.

115.2.33 Special extinguishing systems.

115.2.34 Carbon dioxide beverage dispensing (including gas and detection/alarm).

115.2.35 Multi-family dwelling apprentice inspector.

115.3 Conveyance licensing. Denver Fire Department licenses shall be required for the installation, alteration, replacement, maintenance, removal, dismantling, or inspection activities of conveyances. A conveyance contractor license issued by the Denver Fire Department is required for installation or alteration of equipment.

SECTION 116 is added:
PUBLIC FIRE EDUCATION

116.1 General. The *fire code official* shall have the authority to develop and implement a public fire safety education program as deemed necessary for the general welfare with respect to the fire hazards within the jurisdiction.

116.2 Educational programs and messages. The *fire code official* shall have the authority to ensure that duly authorized public fire safety educational programs or public fire safety messages are disseminated to the general public.

116.2.1 Juvenile firesetters intervention program. Juveniles suspected of firesetting—curious or malicious—shall be required to participate in the Denver Fire Department Juvenile Firesetters Intervention Program.

SECTION 117 is added:

EMERGENCY PLANS AND PROCEDURES

117.1 General. Where required, emergency plans, staff training, and emergency evacuation drills are required for all occupants.

117.2 Plan requirements. Emergency plans and emergency evacuation drills shall be developed in accordance with the Denver Fire Department Fire Prevention Division's guidelines, NFPA 1600, Standard on Disaster/Emergency Management and Business Community Programs, and Chapter 4, Emergency Planning and Preparedness, of this code.

117.3 Review. Emergency plans shall be submitted annually to the Division for review.

117.4 Maintenance. Emergency plans shall be reviewed and updated annually. Revised plans shall be submitted for review and updates shall be provided whenever changes are made in the occupancy or physical arrangement of the building or fire protection systems or features. The owner or manager shall provide floor plans to the Denver Fire Department Fire Prevention Division in a manner *approved* by the *fire code official*. The person developing/updating the emergency plans shall be certified by the Denver Fire Department. See Section 403.13.

SECTION 118 is added:

FIRE ALARM MONITORING - PERMITS AND LICENSES

118.1 General. The provisions of this section apply to the installation, operation of, and scope of monitoring.

118.2 Central alarm station / Supervising station. These facilities, licensed by the Denver Fire Department, monitor remote fire alarm signaling systems when personnel licensed by the Denver Fire Department are in attendance at all times to take such action as required for the notification of the Denver Fire Department.

118.3 Permits. Permits shall be obtained annually for central alarm station / supervising stations and the operators who take such action as required for notification of the Denver Fire Department. All central alarm station / supervising stations and operators shall have current—for current calendar year—permits and licenses.

118.4 Definitions. The following terms are defined in Chapter 2:

CENTRAL ALARM STATION/SUPERVISING STATION

CLASS I FIRE ALARM MONITORING

CLASS II FIRE ALARM MONITORING

OPERATOR

RUNNER

118.5 117.5 License required.

118.5.1 Central alarm station/supervising station. No person or public agency shall monitor fire alarm systems in the City and County of Denver without first obtaining a license to operate a Class I or Class II central alarm station/supervising station.

118.5.2 Operator. No person shall be employed as an operator in a central alarm station/supervising station that monitors fire alarm systems in the City and County of Denver unless licensed as an apprentice operator or operator by the Denver Fire Department.

118.5.2.1 Class I operator. A Denver Fire Department Class I Operator license shall authorize the holder to act as an operator in any central alarm station/supervising station.

118.5.2.2 Class II operator. A Denver Fire Department Class II Operator license shall authorize the holder to act as an operator in any Class II central alarm station/supervising station.

118.5.2.3 Apprentice operator. A Denver Fire Department Apprentice Operator license shall authorize the holder to act as an operator only under the constant supervision of a licensed operator.

118116.5.3 Runner. A Denver Fire Department central alarm station/supervising station Runner license shall authorize the holder to act as a runner for any Class I or Class II central alarm station/supervising station.

118.6 Runner service. The central alarm station/supervising station shall provide runner service to all Class I alarms. Maximum response time from receipt of alarm to arrival of runner service shall not exceed 45 minutes.

CHAPTER 2
DEFINITIONS

SECTION 202
GENERAL DEFINITIONS

Section 202 General Definitions is amended by the addition of the following terms:

ALARM CONTROL UNIT. A component of the [CO detection] system provided with a primary and secondary power source that receives signals from initiating devices or other control units and processes these signals to determine the required system output functions.

ALCOHOL BEVERAGE (also, "ALCOHOL BEVERAGE"). A liquid ethanol mixture intended for human consumption including wine, beer, and beverage spirits.

ALCOHOL BEVERAGE PRODUCTION FACILITY (ABPF). Any building or portion thereof where ethanol mixtures are produced, stored, handled, blended, dispensed, or bottled in the production of alcohol beverages including areas for grain storage and handling.

ALCOHOL BY VOLUME (ABV). Volume percentage of ethanol in an ethanol mixture.

ALTITUDE. Altitude is the measure of elevation typically relative to sea level. The generally recognized altitude of Denver, CO is 5,280 feet. Altitude has a direct impact on design considerations for life safety and property protection including but not limited to the physical properties of flammable and combustible liquids. See Section 3401.5.1.

APPLIANCE. Visible notification component such as a bell, horn, speaker, light, or text that provides audible, visible, and/or tactile outputs to alert occupants of a hazardous condition. Single-station alarms contain both a [initiating] device and a [notification] appliance.

BATTERY BACKUP. The listed device has a battery that powers it when the power provided through the building electrical system fails.

BATTERY-POWERED. The listed device is powered solely by a primary battery for all power requirements and the battery is monitored for end-of-life by producing an audible trouble signal.

BEVERAGE SPIRIT. A liquid ethanol mixture with greater than 16% ABV intended for human consumption including neutral or grain spirits, vodka, whiskey, gin, brandy, applejack, rum, tequila, cordials and liqueurs. Beverage spirits do not include beer, wine, or other alcohol beverages produced from fermentation.

BIOHAZARD. An infectious agent or hazardous biological material that presents a risk or potential risk to the health of humans, animals or the environment. The risk can be direct through infection or indirect through damage to the environment. Biohazardous materials include certain types of recombinant DNA; organisms and viruses infectious to humans, animals or plants (e.g., parasites, viruses, bacteria, fungi, prions, rickettsia); and biologically active agents (i.e., toxins, allergens, venoms) that may cause disease in other living organisms or cause significant impact or the environment or community.

BREWERY. An *alcohol beverage production facility* (ABPF) or portion thereof, including accessory uses, in which beer or other malt liquors, 16% or less ABV, are produced by fermentation. In spirit production, beer and wash are synonymous as precursors to distillation.

BULK STORAGE FOR DISTILLING. The storage of ethanol mixtures in containers exceeding 1.3 gallons (5L) in volume.

CARCINOGEN. A substance that causes the development of cancerous growths in living tissue. A chemical is considered to be a carcinogen if:

1. It has been evaluated by the International Agency for Research on Cancer (IARC) and found to be a carcinogen or potential carcinogen, or
2. It is listed as a carcinogen or potential carcinogen in the latest edition of the Annual Report on Carcinogens published by the National Toxicology Program, or
3. It is regulated by OSHA as a carcinogen.

CASK. A closed vessel of 185 gallons (700 L) or less capacity, constructed of wooden staves and heads, held together by metal hoops, not equipped with provisions for emergency venting, and not intended for fixed installation. In *alcohol beverage production facilities (ABPFs)*, "barrel" is a subset of, and often used interchangeably with "cask". These vessels are used primarily for storing ethanol mixtures.

CENTRAL ALARM STATION/SUPERVISING STATION. A facility that receives fire alarm signals and at which personnel are in attendance at all times to respond to these signals. A supervising station that is licensed for central station service.

CENTRAL FUEL-BURNING APPLIANCE ROOM. A room containing a fuel burning appliance serving multiple dwelling units, such as a boiler, fireplace, stove, furnace, or similar equipment, with the potential to distribute CO to multiple dwelling units.

CHEMICAL FUME HOOD. A ventilated enclosure designed to contain and exhaust fumes, gases vapors, mists, and particulate matter generated within the hood.

CLASS 1 LIQUIDS. Class IA, Class IB or Class IC flammable liquids. For Chapter 40, ethanol mixtures are either Class IB or Class IC flammable liquids.

CLASS I FIRE ALARM MONITORING. The monitoring of a fire alarm system by a licensed central station that is required by Denver's Building and Fire Codes.

CLASS II FIRE ALARM MONITORING. The monitoring of a fire alarm system by a licensed central station that is not required by Denver's Building and Fire Codes.

CO (CARBON MONOXIDE). A colorless odorless gas that is produced as a result of incomplete burning of carbon-containing fuels.

CO ALARM. A single- or multiple-station device having a sensor that responds to CO and listed in accordance with UL 2034 that provides audible notification. Required CO alarms may be monitored by an alarm control unit, but shall be powered independently and shall function autonomously in the event the alarm control unit is nonfunctional.

CO DETECTOR. A device listed per UL 2075 having a sensor that responds to CO, is monitored and powered by an alarm control unit, and does not necessarily have an integral notification appliance.

CONTAINER. In an *alcohol beverage production facility (ABPF)*, any closed *vessel* of 119 gallons (450 L) or less capacity used for transporting or storing *Class 1 Liquids*, not intended for fixed installation and not constructed of wood, but possibly equipped with an overpressure-relieving mechanism in accordance with FM Global Approved Standard for Plastic Plugs for Steel Drums, Class Number 6083, or equivalent.

DENVER BUILDING CODE. The collection of International Code Council (ICC) publications as adopted and amended by the City and County of Denver excluding the *International Fire Code*, as found in Article I of this document.

DEVICE. An alarm initiating component that originates transmission of a change-of-state condition, such as a CO detector, manual fire alarm box, etc. Single-station alarms are both a [initiating] device and a [notification] appliance.

DISTILLATION. In an *alcohol beverage production facility (APBF),* the concentration of *ethanol* by slowly raising the temperature of an *ethanol mixture* through the boiling points of its constituents then collecting and condensing the constituent vapors separately from the remaining water.

DISTILLERY (also **DISTILLED SPIRITS PLANT – BEVERAGE).** An *alcohol beverage production facility (ABPF)* licensed by the TTB to produce, bottle, rectify, process or store *beverage spirits* including areas for *fermentation*, *distillation*, storage, blending, packaging, and accessory uses. Other types of distilleries licensed by the TTB include Distilled Spirits Plant – Experimental, Distilled Spirits Plant –Industrial and Distilled Spirits Plant – Industrial/Beverage.

ELECTROLYTE. A solid, liquid, or aqueous salt solution that permits ionic conduction between positive and negative electrodes of a cell.

EMERGENCY shall mean one or more of the following:

- Fire, regardless of size or type
- Explosion
- Building, structure, or utility failure
- Rescue operations involving humans or animals, including people trapped in elevators due to power failure or mechanical malfunctions
- Failure of or damage to fire protection or life safety systems
- Exposure to a hazard(s)
- Panic
- Hazardous material leak or spill
- Overcrowding of any building or premises
- Rescue operations involving humans or animals injured or trapped in buildings, trenches, scaffolding, grandstands, etc.
- Any other hazard or situation involving or endangering life or property.

EMERGENCY RESPONDER RADIO ENHANCEMENT COMMUNICATION SYSTEM (RES/BDA). The RES/BDA is a network of amplifiers, fiber optic cable, coaxial cable, and radiating cable and/or discrete antennas with or without a distributed antenna system (DAS) controller, or an equivalent technology installed on or inside the property to enhance indoor public safety radio communications.

ETHANOL (also **ETHYL ALCOHOL** or **GRAIN ALCOHOL).** A volatile, flammable, colorless, neurotoxic liquid fit for human consumption with structural formula CH-3CH-2OH (abbreviated as C_2H_5OH or C_2H_6O).

ETHANOL MIXTURE. Liquid mixture comprised primarily of water, and also including ethanol and materials with hazards not regulated by the Denver Building Code or Denver Fire Code.

EXTRACTION. The process of using solvents to remove essential oils or other botanic material from the marijuana plant.

FALSE FIRE ALARM. The activation of any fire alarm system resulting in a response by the Fire Department, caused by the negligent or intentional misuse of the fire alarm system by an owner, employee, agent, tenant, guest, visitor, or any other activation of a fire alarm system not caused by a valid alarm signal, exclusive of a nuisance fire alarm.

FERMENTATION. An enzymatically controlled, anaerobic breakdown of energy-rich compounds by microorganisms, to yield carbon dioxide and *ethanol*.

FLAMMABLE GAS. A material that is a gas at 68ºF (20ºC) or less at 14.7 pounds per square inch atmosphere(psia) (101 kPa) of pressure [a material that has a *boiling point* of 68ºF (20ºC) or less at 14.7 psia (101 kPa)] ~~which~~subdivided as follows:

1. Category 1A. A gas that meets either of the following:
   1.1 Ignitable at 14.7 psia (101 kPa) when in a mixture of 13 percent or less by volume with air.
   1.2 A flammable range at 14.7 psia (101 kPa) with air of not less than 12 percent, regardless of the lower limit, unless data shows compliance with Category 1B.
2. Category 1B. A gas that meets the flammability criteria for Category 1A, is not pyrophoric or chemically unstable, and meets one or more of the following:
   2.1 A lower flammability limit of more than 6 percent by volume of air.
   ~~2.1~~2.2 A fundamental burning velocity of less than 3.9 inches/second (99 mm/s).

~~0. Is ignitable at 14.7 psia (101 kPa) when in a mixture of 13 percent or less by volume with air; or~~
~~0. Has a flammable range at 14.7 psia (101 kPa) with air of not less than 12 percent, regardless of the lower limit.~~

The limits specified shall be determined at 14.7 psi (101 kPa) of pressure and a temperature of 68ºF (20ºC) in accordance with ASTM E681.

Where not otherwise specified, the term "flammable gas" includes both Category 1A and 1B.

FUEL-BURNING APPLIANCE. An appliance that burns carbon-containing solid, liquid, or gaseous fuels.

HARDWIRED. Device installed by wiring directly to the building electrical system, with battery backup, and not controlled by any disconnecting switch other than as required for over-current protection.

HAZMAT (HAZARDOUS MATERIALS). Materials with harmful physical and health properties regulated by the Denver Building Code or Denver Fire Code.

HAZMAT INVENTORY STATEMENT (HMIS). A portion of an HMR containing a list of all the HazMat in a facility including information related to the materials such as product names, locations, quantities, regulated hazards, and Chemical Abstract Service (**CAS**) numbers.

HAZMAT MANAGEMENT PLAN (HMMP). A portion of a HazMat Permit Application containing site maps and facility floor plans identifying HazMat locations and site and building features relevant to the management of HazMat inventories, systems and operations.

HAZMAT REPORT (HMR). A consolidated description of a facility and the HazMat therein including a contact list, code-based description of the building and adjacent outdoor areas, and a HazMat Inventory Statement (HMIS).

INSTALLED. Fit into position and made ready as set forth in the manufacturer's guidelines, listing requirements and applicable standards, to perform the intended functions of detection, notification, and annunciation.

INTERMEDIATE BULK CONTAINER. Any closed vessel defined in Title 49, *Code of Federal Regulations,* Parts 100 through 199 or in Part 6 of the United Nations' Recommendations on the Transport of Dangerous Goods having a liquid capacity of 793 gallons (3000 L) or less, used for transporting or storing Class

1 Liquids, not equipped with provisions for emergency venting, not intended for fixed installation, and not constructed of wood.

LOWER FLAMMABLE LIMIT (LFL) also [**LOWER EXPLOSIVE LIMIT (LEL)**]. The atmospheric volumetric concentration of a flammable vapor in air at which propagation of flame will occur in the presence of an ignition source. The LFL at sea level for ethanol vapor is 3.3 percent.

LOWEST LEVEL OF FIRE DEPARTMENT VEHICLE ACCESS. The lowest level of Fire Department vehicle access shall be measured from the lowest elevation of any required Fire Department access road located no more than 30 feet from any exterior wall of the building.

Exceptions:

1. Where the access road is permitted to be farther than 30 feet from any exterior wall of the building, the lowest level of fire department vehicle access shall be measured from the lowest elevation of any required Fire Department access road located no more than 50 feet from any exterior wall of the building.
2. If any topography, waterway, non-negotiable grades or other similar conditions exist that preclude required Fire Department vehicular access, the *fire code official* is authorized to require additional fire protection systems as required by Chapter 9.

MACHINERY ROOM. See Section 1104.2 of the *Mechanical Code of the City and County of Denver.*

MASH. During *fermentation*, the mixture of ground or cracked grains and other crushed edible organic material steeped in hot water to release carbohydrates and reduce it to sugars. The term is used inconsistently (often overlapping with *wort*) for the various solutions in process up to the point where *fermentation* is complete.

MASS NOTIFICATION SYSTEM. A mass notification system (MNS) is a system used to provide emergency information and instructions to people in a building, area, site or other space using intelligible voice communications and possibly including visible signals, text, graphics, tactile, or other communications methods.

MINIMUM EXPLOSIVE CONCENTRATION (MEC). The lowest mass to volume concentration in air of combustible dust that will propagate a flame. The MEC for grain dust is 0.055 oz/ft^3 (55 g/m^3).

MULTIPLE PURPOSE ALARM. A single device that incorporates the capability to detect more than one hazard, such as smoke, vapors, and/or gases. Multiple purpose devices shall emit audible alarms in a manner that clearly differentiates between the detected hazards.

MULTIPLE STATION ALARM. [1] A single alarm device capable of being physically or wirelessly interconnected to one or more similarly capable devices so the actuation of any one device causes the appropriate notification signal to occur in all interconnected devices. [2] An interconnected group of single-alarm devices defined in [1].

NON-DEDICATED SMOKE CONTROL SYSTEM. Smoke control components and equipment that are shared with other systems, such as the building HVAC system. Upon activation of fire alarm, non-dedicated smoke control equipment changes mode of operation to achieve the smoke control performance objectives. "Non-dedicated systems" shall refer only to equipment and components controlled from the firefighters' smoke control panel.

NORMALLY CLOSED. A system or *vessel* in an *alcohol beverage production facility (ABPF)* used for storage, production, dispensing, blending, bottling, or handling of *Class 1 Liquids* where, for less than 50 percent of the time it is in operation, its contents are not exposed to atmosphere and vulnerable to evaporation. Processes involving *casks* opened only for filling, draining or sampling, *distillation* where all vapors are condensed below their flash point prior to collection, uncovered *vessels* of 5.3-gallon (20 L) capacity or less

used to collect distillate below its f*lash point*, and covered blending or maceration *vessels* are typically considered normally closed.

NORMALLY OPEN. A system or *vessel* in an *alcohol beverage production facility (ABPF)* used for storage, production, dispensing, blending, bottling, or handling of *Class 1 Liquids* where, for 50 percent or more of the time it is in operation, its contents are continuously exposed to atmosphere and vulnerable to evaporation, or where a *Class 1 Liquid* at or above its *flash point* is exposed to atmosphere at any time. Continuous blending or maceration in uncovered *vessels*, open draining of *Class 1 Liquids* above their *flash points*, and the act of "bleeding" heads (the initial vapors generated during *distillation*) or tails (the last vapors generated during distillation) to atmosphere are typically considered normally open.

NUISANCE FIRE ALARM. The activation of any fire alarm system resulting in a response by the Fire Department, caused by mechanical failure, malfunction, improper installation, lack of maintenance or other condition for which Fire Department personnel are unable to determine initiation of a valid alarm signal. (See Sections 401.5 and 907.1.5).

OCCUPANY CLASSIFICATION

Factory Industrial F-1 Moderate-hazard occupancy.

F-1 Beverages is amended to add the following condition:

Beverages; over 16-percent alcohol content in combustible containers.

Factory Industrial F-2 Low-hazard Occupancy.

F-2 Beverages is amended to add the following condition:

Beverages; up to and including 16-percent alcohol content in noncombustible containers

Uses other than Group H, item 18 is replaced:

18. The production and storage of alcohol beverages with concentrations by volume (ABV) up to and including 16-percent conforming to the requirements of this code.

Uses other than Group H, item 19 is deleted.

Group S-1 moderate-hazard storage.

S-1 Beverages is amended to add the following condition:

Beverages up to and including 16-percent alcohol in combustible containers

Group S-2 low-hazard storage.

S-1 Beverages is amended to add the following condition:

Beverages up to and including 16-percent alcohol in noncombustible containers

OPERATIONS PERMIT. A permit issued in conjunction with the operations listed in Section 105.6.

OPERATOR. A competent person employed by a central alarm station and licensed by the Denver Fire Department to take such action as required for notification of the Denver Fire Department.

OTHER HEALTH HAZARD MATERIAL. A hazardous material which affects target organs of the body, including but not limited to, those materials which produce liver damage, kidney damage, damage to the nervous system, act on the blood to decrease hemoglobin function, deprive the body tissue of oxygen, or affect reproductive capabilities, including mutations (chromosomal damage) or teratogens (effects on fetuses).

PERMITABLE QUANTITY. The minimum amount of hazardous or any other regulated material allowed to be stored or used at a property before an operations permit is required by Section 105.6.

PILE. Independently stacked commodities possibly organized by separate spacers, dunnage, or pallets in which the demise of any item on a lower layer or tier compromises the structural stability of the storage system.

PLUG-IN. CO alarm with battery backup, installed by being plugged into an electrical outlet for primary power.

PORTABLE TANK. A *tank* that is readily capable of being relocated within a facility, not permanently attached to immovable structure or ground, and not constructed of wood.

POST OIL PROCESSING. The process of refining essential oils after the extraction, including but not limited to, dewaxing and winterization processes.

PRESSURE VESSEL. *Containers*, *intermediate bulk containers*, *processing vessels*, and *tanks* that under normal conditions, are permitted to operate above 15 pounds per square inch gauge (psig; 103.4 kPa).

PROCESS DESCRIPTION. In an *alcohol beverage production facility (ABPF),* an operational description such as a flow chart of the sequence of events required to convert raw materials from the state in which they enter the APBF through each development point until the finished products are derived. The *process description* identifies all input and output materials and includes quantities, concentrations, temperatures, pressures, types of equipment, systems, etc. at each development point using code-based terminology, e.g., "37 gallons of 55 percent ABV at standard temperature and pressure (STP)" vs. "all the high wines collected." All systems and processes utilized to produce all intermediate and finished products are required to be included in the process description.

PROCESSING VESSEL. In *alcohol beverage production facility (ABPF)*, an open or closed *vessel* other than *stills* used in the manufacture of *ethanol mixtures*. *Processing vessels* include fermentation tanks, mash tuns, blending tanks, etc., but do not include long-term storage vessels such as *vats* or *casks*.

PROPERTY. Private and public land in the undeveloped and developed state including the buildings, structures, paving and all other immobile improvements; natural features such as trees, shrubbery and similar botanical growth; and vehicles, *vessels*, equipment, materials and similar movable items located on them.

RACK. Shelves or similar structural frame-supported system of tiers in which the demise of any item on a lower tier does not affect the structural stability of the storage system.

RADIO FREQUENCY MAINTENANCE PLAN. The radio frequency maintenance plan is a document developed and distributed by the building owner for the purpose of maintaining the Department of Public Safety radio system from harmful interference generated on the property or otherwise under the control of the owner.

RADIOACTIVE MATERIAL. Any material or combination of materials that spontaneously emits ionizing radiation.

REGULATED MATERIAL. Any material regulated by the fire code for which an operations permit could be required including storage and/or use of hazardous materials, LPG, combustible dust operations, etc.

RELEASE/UNAUTHORIZED DISCHARGE. Any spilling, leaking, pumping, pouring, emitting, emptying, discharging, injecting, escaping, leaching, dumping, or disposing into the environment including the abandonment or discharging of *barrels*, *containers*, and other receptacles containing any hazardous substances or pollutant or contaminant.

REMOTE AREA. (c.f. NFPA 13). The specified floor area over which an assigned sprinkler density (in volume per minute per unit area) is required in the design of an automatic sprinkler system.

RUNNER. A qualified person who responds to the location where a reported fire alarm system has been activated for the purpose of silencing, restoring, or confirming that the system is restored to a normal condition.

SELF-SERVICE MOTOR FUEL-DISPENSING FACILITY. That portion of motor fuel-dispensing facility where flammable and combustible liquids, liquefied petroleum gas, compressed natural gas, or hydrogen motor fuels are dispensed from fixed *approved* dispensing equipment into the fuel tanks of motor vehicles by persons other than a motor fuel-dispensing facility attendant.

SENSITIZER. A chemical that causes a substantial proportion of exposed people or animals to develop an allergic reaction in normal tissue after repeated exposure to the chemical.

SINGLE-FAMILY DWELLING. Any improved real property used or intended to be used as a residence and that contains one dwelling unit.

SINGLE STATION ALARM. A single device comprised of a sensor, alarm-initiating device, control components, and an alarm notification appliance.

SINGLE STATION [CO] ALARM. A device comprised of a sensor, alarm-initiating device, control components, and an alarm notification appliance in one unit.

SLEEPING ROOM. Any room used or intended to be used for sleeping purposes as determined by the *building official*.

SPIRIT. An *ethanol mixture* with greater then 16% ABV produced by *distillation* or fortification of wine, wash, beer or a previously distilled *spirit*.

STATIONARY TANK. A *tank* not intended to be relocated that is physically attached to immovable structure or ground.

STILL. In an *alcohol beverage production facility (ABPF)*, any appliance is which *distillation* of an *ethanol mixture* is performed. *Stills* include pots, columns, condensing coils, and the piping between them.

STORAGE AREA. An *alcohol beverage production facility (ABPF)* or portion thereof where *alcohol beverages*, *ethanol mixtures*, or materials incorporated or utilized in the manufacture of either are held for aging, awaiting transport, or subsequent handling (c.f., *use area*).

TANK. In an *alcohol beverage production facility (ABPF)*, any *normally open* or *normally closed vessel* having a capacity greater than 60 gallons (230 L) intended for storing or processing (but not transporting outside the facility) *Class 1 Liquids and* equipped with provisions for emergency venting.

TENANT. A person or legal entity who rents a dwelling unit from the *owner* for a fixed period of time usually under the terms of a lease or a similar legal entitlement or agreement.

USE AREA. An *alcohol beverage production facility (ABPF)* or portion thereof where *ethanol mixtures* or materials incorporated or utilized in the manufacture of *alcohol beverages* or other *ethanol mixtures* are actively handled in processes such as *fermentation*, *distillation*, rectification, transportation, remixing, dispensing, bottling, blending, etc. (c.f., *storage area*).

VAT (also **FOUDRE).** In an *alcohol beverage production facility (ABPF)*, a *stationary tank* constructed primarily of wood.

VESSEL. In an *alcohol beverage production facility (ABPF)*, any reservoir holding – unless otherwise noted – C*lass 1 Liquids* including casks, containers, *intermediate bulk containers*, *processing vessels*, and *tanks*.

WALL HYDRANT. Valved 2-1/2-inch (64 mm) exterior standpipe connection.

WASH (also **BEER**, **MALT LIQUOR).** The *ethanol mixture* intended for *distillation* produced by the *fermentation* of *mash* or *wort*. For *spirit* production, *wash* and *wine* are analogous as precursors to *distillation*.

WINE. An *ethanol mixture* produced by the *fermentation* of organic products, namely fruits, including agave. For *spirit* production, *wine* and *wash* are analogous as precursors to *distillation*.

WINERY. An *alcohol beverage production facility (ABPF)* or portion thereof, including accessory uses, in which *wine* at 16% or less ABV is produced by fermentation.

WORT. The sugar solution strained from *mash* for *fermentation*.

CHAPTER 3
GENERAL REQUIREMENTS

SECTION 301
GENERAL

Section 301.2 Permits is replaced as follows:

301.2 Permits. Permits shall be required as set forth in Section 105.5 for the activities or uses regulated by Section 303–Asphalt Kettles; Section 304–Combustible Waste Material; Section 306-Motion Picture Projection Rooms and Film; Section 307-Open Burning, Recreational Fires and Portable Outdoor Fireplaces; Section 308-Open Flames; Section 309-Powered Industrial Trucks and Equipment; Section 311-Vacant Premises; Section 314-Indoor Displays; 315- General Storage; Section 319 – Mobile Food Preparation Vehicles and Section 320 – Additive Manufacturing.

SECTION 302
DEFINITIONS

Section 302.1 Definitions is amended to add the following term:

302.1 Definitions. The following term is defined in Chapter 2:

ELECTROLYTE

SECTION 304
COMBUSTIBLE WASTE MATERIAL

Section 304.2.1 Required storage conditions is added as follows:

304.2.1 Required storage conditions. Combustible rubbish kept or accumulated within or adjacent to buildings, structures or residential dwelling units shall be in containers complying with this code, or in rooms or vaults constructed of non-combustible materials.

Exception: Storage, accumulation, use and handling of combustible rubbish and waste, newspapers, magazines, etc. not in excess of 10 cubic feet aggregate.

Section 304.3 Containers is replaced as follows:

304.3 Containers. Combustible rubbish, and waste material kept within or near a structure shall be stored in accordance with Sections 304.3.1 through 304.3.7.

Section 304.3.5 Removal is added as follows:

304.3.5 Removal. Combustible rubbish stored in containers outside of noncombustible vaults or rooms shall be removed from buildings at least once each working day.

Sections 304.3.6 Waste material handling operations is added as follows:

304.3.6 Waste material handling operations. Occupancies exclusively performing commercial rubbish handling or recycling shall maintain rubbish or product to be processed or recycled as follows:

1. In *approved* vaults

2. In covered metal or metal-lined receptacles or bins, or

3. Completely baled and stacked in an orderly manner in an *approved* location.

Section 304.3.7 Container location is added as follows:

304.3.7 Container location. A permit shall be required for the installation and maintenance of a waste receptacle with a capacity greater than 20 cubic feet. A site plan depicting the location of the waste receptacle must be submitted for approval prior to installation and anytime the waste receptacle is relocated. Toxic, explosive, flammable, chemical, infectious, radioactive materials and any other hazardous waste shall not be disposed of in the general waste dumpster(s). The waste receptacle(s) shall not be placed within 15 feet of combustible walls, openings, or combustible roof eave lines. The waste receptacle shall not obstruct emergency vehicular access or positioning for fire ground operations.

SECTION 307
OPEN BURING, RECREATIONAL FIRES AND PORTABLE OUTDOOR FIREPLACES

Section 307.1 General is replaced as follows

307.1 General. A person shall not kindle or maintain or authorize to be kindled or maintained any open burning or *recreational fire* unless permitted by the Denver Department of Public Health & Environment (DPHE) and conducted and approved in accordance with Sections 307.1.1 through 307.5.

Section 307.2.1 Authorization is deleted.

Section 307.4.3 Portable outdoor fireplaces is replaced as follows:

307.4.3 Portable outdoor fireplaces and chimeneas. Portable outdoor fireplaces and chimeneas are prohibited.

SECTION 308
OPEN FLAMES

Section 308.1.4 Open-flame cooking devices is replaced as follows:

308.1.4 Open-flame cooking devices. No gas-fired grills, charcoal grills, or other similar devices used for cooking, heating, or any other purpose, shall be used or kindled on any balcony or under any overhanging portion or within 10 feet (3 m) of any structure.

Exceptions:

1. One- and two-family dwellings.
2. LP-gas burners having an LP-gas container with a water capacity not greater than 2.5 pounds [nominal 1 pound (0.454kg) LP-gas capacity]. Two extra 1 pound LP-gas containers may be stored on the balcony.
3. Listed natural gas appliances shall be permitted on balconies when installed in accordance with the *Denver Fuel Gas Code* and supplied by the building's natural gas system.
4. Listed electric ranges, grills, pellet smokers, or similar electrical apparatus.

SECTION 309
POWERED INDUSTRIAL TRUCKS AND EQUIPMENT

Section 309.3 Battery chargers is replaced as follows:

309.3 Battery-charging operations. Battery-charging operations shall be located in areas designated for such purpose. Where on-board chargers are used, charging shall be accomplished at locations designated for such purpose.

309.3.1 Battery chargers. Battery chargers shall be of an *approved* type. Combustible storage shall be kept a minimum of 3 feet (915 mm) from battery chargers.

309.3.2 Battery-charging areas. Battery-charging areas shall be kept free of extraneous combustible materials. Battery charging shall not be conducted in areas accessible to the public.

309.3.2.1 Battery-charging area fire protection. Where aggregate electrolyte capacity exceeds 100 gallons, battery-charging areas shall be protected with an automatic sprinkler system in accordance with NFPA 13.

Exception: Automatic sprinklers shall not be required where the amount of electrolyte per battery-charging area is 100 gallons or less and the battery-charging areas are separated by a minimum of 75 feet.

309.3.2.2 Battery-charging area construction. Where aggregate electrolyte capacity exceeds 100 gallons, battery charging areas shall be separated from the other portions of the building with a one-hour fire barrier constructed in accordance with Chapter 7 of the *Denver Commercial Building Code*.

Exceptions:

1. One-hour fire barriers shall not be required where the amount of electrolyte per battery-charging area is 100 gallons or less and the battery-charging areas are separated by a minimum of 75 feet.
2. In buildings that are protected throughout with an automatic sprinkler system in accordance with NFPA 13, one-hour fire barriers shall not be required where the amount of electrolyte per battery charging area is 200 gallons or less and the battery-charging areas are separated by a minimum of 75 feet.

309.3.2.3 Smoking prohibited. Smoking shall be prohibited in battery-charging areas. "No Smoking" signs shall be provided in the charging area in accordance with Section 310.3.

309.3.2.4 Neutralization. An *approved* method and materials capable of neutralizing a spill from the largest battery to a pH between 5.0 and 9.0 shall be provided.

309.3.2.5 Spill control. Each rack or tray of batteries shall be provided with a liquid-tight 4-inch minimum spill control barrier which extends at least one-inch beyond the battery rack in all directions. Alternative methods of spill control are subject to approval by the *fire code official*.

Exceptions:

1. Spill control shall not be required where the amount of electrolyte per battery-charging area is 100 gallons or less and the battery-charging areas are separated by a minimum of 75 feet.

2. In buildings that are protected throughout with an automatic sprinkler system in accordance with NFPA 13, spill control shall not be required where the amount of electrolyte per battery charging area is 200 gallons or less and the battery-charging areas are separated by a minimum of 75 feet.

Section 309.4 Ventilation is replaced as follows:

309.4 Ventilation. Where aggregate electrolyte capacity exceeds 100 gallons, continuous ventilation shall be provided at a rate of not less than 1 cu-ft./min/sq. ft. of designated battery-charging area.

Exceptions:

1. Ventilation systems shall not be required where the amount of electrolyte per area is 100 gallons or less and the battery-charging areas are separated by a minimum of 75 feet.
2. In buildings that are protected throughout with an automatic sprinkler system in accordance with NFPA 13 ventilation systems shall not be required where the amount of electrolyte per battery charging area is 200 gallons or less and the battery-charging areas are separated by a minimum of 75 feet.

Section 309.8 Signage is added as follows:

309.8 Signage. Doors into battery-charging areas shall be provided with *approved* signs. The signs shall state that:

1. The room contains energized battery systems.
2. The room contains energized electrical circuits.
3. The battery electrolyte solutions are corrosive liquids.

SECTION 311
VACANT PREMISES

Section 311.1.1 Abandoned premises is amended by removing the reference to the *International Property Maintenance Code*

SECTION 315
GENERAL STORAGE

Section 315.4.3 Pile size, aisles and driveways is added as follows:

315.4.3 Pile size, aisles and driveways. Combustible material shall be piled with due regard to stability of piles and in no case higher than 20. When the area used for outside storage exceeds 50 feet but is less than 150 feet, in any dimension, aisles of not less than eight feet clear width shall be provided between piles. When the area used for outside storage exceeds 150 feet in any dimension, a driveway between and around piles shall be at least 15 feet in width and maintained free of rubbish, equipment or other articles or materials. Driveways shall be so spaced that a maximum grid system unit of 50 feet by 150 feet is produced.

SECTION 316
HAZARDS TO FIRE FIGHTERS

Section 316.7 Fences, walls, retaining walls and similar barriers is added as follows:

316.7 Fences, walls, retaining walls, and similar barriers. The use of barbed wire or any other sharp-pointed material, devices or features that deliver a physical or health hazard on, as, or on top of, fences, walls, retaining walls, or similar barriers, regardless of height, is prohibited except as provided in accordance with Section 316.7.1.

Exception: Barbed wire may be installed where *approved* by the *fire code official* and a permit is obtained in accordance with Section 105.5

Section 316.7.1 Electrified fences is added as follows:

316.7.1 Electrified fences. Electrified fences may be permitted by specific approval of the *fire code official*. Requirements of submission for an electrified fence shall comply with DFD policy 316-1. All fences shall be designed in accordance with Sections 1609 and 1807 of the *Denver Commercial Building Code*. Only fences powered by a 12- volt direct current (DC) power source shall be considered.

Section 316.8 Confined spaces is added as follows:

316.8 Confined spaces. Tanks that contain materials that would not contain enough oxygen to support life or contain a toxic atmosphere shall have at each entry point; a warning sign posted indicating the need for procedures for safe entry into confined spaces.

SECTION 317
LANDSCAPED ROOFS

Section 317.1 General is replaced as follows:

317.1 General. Landscaped roofs shall be installed and maintained in accordance with Sections 317.2 through 317.6 and Section 1505 and 1507.16 of the *International Building Code* and shall be installed in accordance with ANSI/SPRI-VF-1 and the administrative and design requirements for vegetated roofs in the Department of Community Planning & Office of Climate Action, Sustainability, and Resiliency Rules and Regulations Governing Green Building Requirements.

Section 317.1.1 Vegetative roof materials is added as follows:

317.1.1 Vegetative roof materials. In buildings of Type V, IV, III, or II-B construction, the vegetative roof materials shall contain assemblies that include modular trays or containers that do not exceed 4 square feet per tray or container, weigh no more than 180 pounds per tray or container when fully saturated and vegetated, and do not present excessive burning characteristics as evaluated by the *fire code official*.

Exception. The *fire code official* may allow vegetative roof materials that do not contain assemblies that include modular trays or containers when an *owner* can provide sufficient evidence that the landscaped roof allows firefighters or emergency responders to conduct ventilation during firefighting efforts and post-fire salvage and overhaul operations.

Section 317.3.1 Opening Protection is added as follows:

317.3.1 Opening protection. Vegetation abutting building openings shall be separated by five feet or openings shall be provided sprinkler protection per Section 903.2.11.1.4.

Section 317.6 Fire access is added as follows:

317.6 Fire access. All roofs containing vegetated areas shall be afforded access via exit stairways and fixed permanent ladders to upper roofs. The exit stairways and fixed permanent ladders to upper roofs shall be located within 230 feet from any vegetated area. Access points shall be separated by a minimum of 10 feet from the vegetated areas.

Exceptions:

1. In buildings less than 4 stories in height, exit stairways and fixed permanent ladders need not be provided, but there shall be a minimum 8-foot-wide clear perimeter around the edges of the roof.
2. In existing buildings, the *fire code official* shall approve methods of access to all vegetated areas.

SECTION 319
MOBILE FOOD PREPARATION VEHICLES

Section 319.4.1.1 Agent line valve is added as follows:

319.4.1.1 Agent isolation valve. A manual isolation valve is allowed in the extinguishing agent line to allow for safe travel, however the Operator is responsible for ensuring the extinguishing system is on-line prior to actuating any cooking appliance.

Section 319.4.2 Fire extinguisher is replaced and new subsections are added as follows:

319.4.2 Fire extinguisher. Portable fire extinguishers shall be provided in accordance with Section 319.4.2.1 through 319.4.2.2

319.4.2.1 Fire extinguisher mounting location. A 2A:10BC fire extinguisher shall be mounted in each vehicle.

319.4.2.2 Fire extinguishers for cooking operations. If grease or grease-laden vapors are produced during cooking operations, a Class K extinguisher shall also be required.

Section 319.8.1 Maximum aggregate volume is replaced as follows:

319.8.1 Maximum aggregate volume. The maximum aggregate capacity of LP-gas containers transported on the vehicle and used to fuel cooking appliances only shall not exceed 80 pounds (36 kg) propane capacity.

Section 319.8.2 Protection of container subsections are added as follows:

319.8.2.1 Trailer tongue mounting. LP-gas containers may be mounted on the A frame structure of the tongue of the trailer with propane brackets that prevent any movement.

319.8.2.2 Rear of vehicle mounting. LP-gas containers mounted on the corners or rear of the vehicle shall be enclosed in an impact resistant cage to prevent damage from vehicular accident and have the bottom of the LP-gas containers no lower than 28 inches above bumper or A-frame structure.

319.8.2.3 Ventilation. LP-gas containers installed in a compartment on the rear of the vehicle or tongue of a trailer shall be ventilated at the top and bottom of the compartment.

319.8.2.4 Access door labeling. Access hatches and doors for concealed LP-gas container storage shall be labeled with DOT-style placards with an identification code of "1075" and a decal that states "flammable".

319.8.2.5 Roof mounting. LP-gas containers shall not be mounted directly on roofs.

319.8.2.6 Front of vehicle mounting. LP-gas containers shall not be mounted ahead of the front axle on a self-powered vehicle.

Section 319.8.4.1 Gas pipe installation is added as follows:

319.8.4.1 Gas pipe installation. Installation of gas piping shall comply with all of the following:

1. LP-gas piping installed beneath the vehicle shall be painted black iron pipe with a minimum wall thickness of 0.049 inches (1.2 mm).

   Exception: *Approved* rubber coated flex connectors (UL-21 stainless steel) may be used to connect to fuel sources or to transition to a different support structure in order to isolate strain on the rigid system.

2 Flexible connector. A LP-gas flexible connector, no longer than 5 feet, shall be installed between the regulator and the LP-gas container.

3 The LP-gas flexible connector and gas valve shall not extend past the body lines of the vehicle. Gas lines should preferably be installed down the center of the vehicle and away from the tire area.

4 All piping shall be installed outside the vehicle. Piping shall be under the vehicle and below any insulation or false bottom. When piping passes through sheet metal or a structural member, a rubber grommet or equivalent protection shall be installed to prevent chafing.

5 Gas piping shall be installed to enter the vehicle through the floor directly beneath or adjacent to the appliance served.

6 If a branch line is installed in gas piping, the tee connection shall be in the main gas line under the floor and outside the vehicle.

Section 319.10.1 Exhaust system is replaced as follows:

319.10.1 Exhaust system. The exhaust system, including hood, grease-removal devices, fans, ducts and other appurtenances, shall be inspected and cleaned in accordance with Section 606.3 at the interval for high-volume cooking operations.

Section 319.10.2 Fire protection systems and devices is replaced as follows:

319.10.2 Fire protection systems and devices. Fire protection systems and devices shall be maintained in accordance with Section 901.6. Hood extinguishment systems shall be maintained and inspected in accordance with Section 904.13.5.

CHAPTER 4
EMERGENCY PLANNING AND PREPAREDNESS

SECTION 401
GENERAL

Section 401.1 Scope is amended by deleting the Exception.

Section 401.3 Emergency responder notification and all of its subsections are deleted in their entirety and replaced as follows:

401.3 Emergency responder notification. In the event of an emergency, including but not limited to, unwanted fire, hazardous materials discharge, medical incident, or environmental calamity including utility malfunction, occurs on a property, the owner, occupant, or other person in responsible charge of the property or portion thereof, including tenants employees and property or equipment maintenance personnel, shall immediately report the emergency to 911 unless the Fire Department has *approved* an alternative emergency procedure for the event. Building employees, tenants and maintenance personnel shall implement the appropriate emergency plans and procedures. No person shall, by any means, require or otherwise purposely cause any delay in the reporting of an emergency.

401.3.1 Evidence of emergency. Upon discovery of evidence of an unwanted fire, hazardous materials discharge, medical incident, or environmental calamity, even though it appears to have been extinguished or otherwise stabilized, the owner, occupant, or any other person in responsible charge of the property or portion thereof, including tenants, employees and property or equipment maintenance personnel shall immediately notify the Denver Fire Department of the evidence including what is known of the location and circumstances. Such evidence shall not be disturbed, thus preserving data for the Denver Fire Department to conduct an investigation.

401.3.2 Elevator entrapment communication procedures for new, altered, and existing conveyances. Upon an entrapped party's activation of the elevator car 2-way communication system required by ASME A17.1, the authorized personnel receiving the call (call recipient), shall request the following information:

1. The number of occupants in the car; and
2. Whether any occupants are in medical distress; and
3. Whether smoke or fire is apparent; and
4. Whether any occupant has a physical or mental handicap

If the response to 2, 3 and 4 above are all negative and the call recipient is located at a call center remote from the elevator location, the call recipient shall immediately notify the appropriate emergency contact for the property. Once known, the call recipient shall provide the trapped party with the estimated time of arrival of assistance.

The call recipient shall immediately notify the Denver Fire Department if any of the following occur:

1. The response to either 2, 3 or 4 above is affirmative.
2. Communication with a trapped party is lost prior to obtaining the information required above and cannot be re-established within 5 minutes.
3. Receive a second call from the same elevator within 5 minutes of the first call.

4. The expected authorized building or elevator contractor or technician is unable to respond within 20 minutes of the first notification of entrapment.
5. There is contact from the same stalled elevator 20 minutes after the original call indicating that help has not arrived.

401.3.3 Procedures. for new, altered, and existing conveyances, written emergency evacuation procedures shall be made and kept on the premises. The procedures shall identify the hazards and safety precautions required in evacuating passengers from a stalled elevator. After responding to a trapped party incident, the fire department shall be notified immediately if any of the following occur;

1. Authorized building personnel responding to the incident determine that the elevator platform is not securely established within 7 inches of a landing.
2. Qualified elevator personnel responding to the incident determine that the elevator platform cannot be securely established within 18 inches of a landing.
3. It is found by any responding party that; any trapped occupants are in medical distress, smoke or fire is apparent and/or any occupant has a physical or mental handicap.

Any personnel responding to an elevator trapped party incident may contact the fire department at any time during the event as they deem necessary.

401.3.4 Records. For new, altered, and existing conveyances, a record of authorized and sufficiently trained personnel responsible to respond to a trapped party elevator incident shall be maintained on the premises. Records of elevator entrapment incidents shall be maintained on site to include; date, time of responder arrival, car designation, number of trapped occupants, event resolution, cause, and remedial action taken.

Section 401.5 Making false report is replaced as follows:

401.5 False alarm. No person shall deliberately or maliciously report a fire or unauthorized discharge of hazardous materials when that person knows that no fire or discharge exists. The person responsible for the false alarm shall reimburse the City for the total cost of responding to the false alarm.

Section 401.9 Misleading information is added as follows:

401.9 Misleading information. It shall be unlawful for a person to willfully make any false, fraudulent, misleading, or unfounded report or statement or to willfully misrepresent any fact with the intention of misleading any Fire Department personnel or interfering with Fire Department operations.

SECTION 402
DEFINITIONS

Section 402.1 Definitions is amended by adding the following term:

402.1 Definitions. The following term is defined in Chapter 2:

PROPERTY

SECTION 403
EMERGENCY PREPAREDNESS REQUIREMENTS

Section 403.11.2 Public safety plan for gatherings is amended by adding the following to the list of items required to be addressed in the public safety plan:

- Fire hydrant locations.
- Local fire protection (suppression and alarm).
- Public assembly areas.
- Emergency procedures and employee training.
- Locations of hazardous operations permitted in Section 105.5.

Section 403.12 Facility manager certification is added as follows:

403.12 Facility manager certification. All personnel responsible for facility maintenance, fire safety emergency procedures, evacuation plans, evacuation drills, employee training and response procedures, hazard communication, resident training, tenant identification, emergency response team formulation and training, hazardous materials management plans, hazardous materials inventory statement, etc. shall complete a Denver Fire Department training course and shall have a current certification by the Denver Fire Department.

SECTION 404
FIRE SAFETY EVACUATION AND LOCKDOWN PLANS

Section 404.2 Contents is replaced as follows:

404.2 Contents. Fire safety and evacuation plan contents shall be in accordance with Sections 404.2.1 through 404.2.3.2 and Denver Fire Department policy on Emergency Procedures and Emergency Evacuation.

Section 404.2.2 Fire safety plans is amended by adding item 8 as follows:

8. Provide a description of the building's life safety systems including fire alarm, fire sprinkler (including special suppression, standpipes, fire pumps, etc.), smoke control, elevator recall, areas of refuge, emergency power, etc.

CHAPTER 5
FIRE SERVICE FEATURES

SECTION 502
DEFINITIONS

Section 502.1 Definitions is amended by adding the following term:

502.1 Definitions. The following term is defined in Chapter 2.

LOWEST LEVEL OF FIRE DEPARTMENT VEHICLE ACCESS

SECTION 503
FIRE APPARATUS ACCESS ROADS

Section 503.1.1 Buildings and facilities is amended by adding the following to the end of the last sentence:

…and the interior of all grade level courts (also see Section 504.5). The *approved* route shall be not less than a 3-foot-wide access walkway leading from fire apparatus access roads to all portions of the exterior walls of the first floor that have no window or door openings (also see 504.1).

Section 503.1.1 Buildings and facilities, Exception 1, Item 1.1 is replaced & item 1.4 is added as follows:

1.1 Where a building is equipped throughout with an *approved* automatic sprinkler system installed in accordance with Sections 903.3.1.1 or 903.3.1.2, the 150-foot dimension may be increased to 250 feet.

1.4 The structure is comprised of an accessory dwelling unit constructed in accordance with the Denver Residential Code.

Section 503.2.1 Dimensions is replaced as follows:

503.2.1 Dimensions. Fire apparatus access roads shall comply with currently adopted Department of Transportation and Infrastructure *Rules and Regulations for Standard Right-of-Way Cross Sections and Utility Locations* but shall have an unobstructed width of not less than 20 feet, exclusive of shoulders. Existing fire apparatus access roads shall maintain their width but shall be not less than the minimum clear width allowed in Table 503.2.1. Alleys, service drives, drive aisles and similar driving surfaces shall not serve as *fire apparatus access roads*. *Approved* security gates shall comply with Section 503.6 and fire apparatus access roads shall have an unobstructed vertical clearance of not less than 13 feet 6 inches and be open to sky without obstruction.

Exception: Low profile bikeway elements four inches or less in height are permitted in required width but shall not reduce drive lane to less than ten feet.

TABLE 503.2.1
MINIMUM CLEAR WIDTHS FOR EXISTING FIRE APPARATUS ACCESS ROADS

Type of Building/Structure to Be Served by Existing Fire Apparatus Access Road	**Minimum Unobstructed Width**[1,2]
Single-family detached buildings, two-dwelling unit attached buildings, or townhouses with alleys	14 feet
Single-family detached buildings, two-dwelling unit attached buildings, or townhouses without alleys but with driveways that extend to the road	16 feet
Single-family detached buildings, two-dwelling unit attached buildings, or townhouses without alleys or driveways that extend to the road	16 feet
Multi-family residential buildings, three (3) stories or less AND with 15 or less dwelling units per building[3]	16 feet
Multi-family non-high-rise buildings, four (4) or more stories OR with 16 or more dwelling units per building[3] Non-residential non-high-rise buildings/structures	20 feet with an additional 40-feet (length) of "no parking" fire lane at the main entrance of the building. Where 25 feet or greater unobstructed width is provided, a 40-foot "no parking" fire lane is not required.
High-rise buildings/structures[3]	20 feet with an additional 40 feet (length) of "no parking" fire lane at the main entrance of the building. Where building/structure is located on a corner, 20 feet is required on 2 sides of the building. Where 25 feet or greater unobstructed width is provided, a 40-foot "no parking" fire lane is not required.

[1] Based on 8-foot parking and 18-inch curb-to-tire widths in accordance with City and County of Denver standards, unless a 7-foot parking lane is allowed by Denver Fire when existing streets are 32 feet wide or less.
[2] Where a fire apparatus access road serves two or more uses, the larger required minimum unobstructed width shall be maintained.
[3] A multi-family building with commercial on the first floor shall comply with the non-residential non-high-rise minimum clear width requirement, except that high-rise buildings/structures shall comply with high-rise minimum clear width requirement.

Section 503.2.3 Surface is replaced to read as follows:

503.2.3 Surface. All–weather permanent fire access surfaces shall be asphalt, concrete, or other *approved* surface providing all weather driving capabilities. Temporary fire access surfaces during construction are permitted to consist of a gravel road base or asphalt or other *approved* surface. See Section 1607.7.2 of the *Commercial Building Code of the City and County of Denver* for Fire Department apparatus loading.

Section 503.2.4 Turning radius is replaced as follows:

503.2.4 Turning radius. The required turning radius of a *fire apparatus access road* shall be a minimum of 23'-2" feet inside and 44'-2" feet outside.

Exception. Where *approved* by the *fire code official*, pedestrian and bicyclist facilities within existing *fire apparatus access roads* shall be permitted to reduce the minimum required turning radius dimension.

Section 503.2.5 Dead ends is replaced as follows:

503.2.5 Dead ends. Dead-end fire apparatus access roads in excess of 150 feet (45,720 mm) in length shall be provided with an *approved* area for turning around fire apparatus in accordance with Figure 503.2.5.

Figure 503.2.5 Dead-end fire apparatus access road turnaround is added as follows:

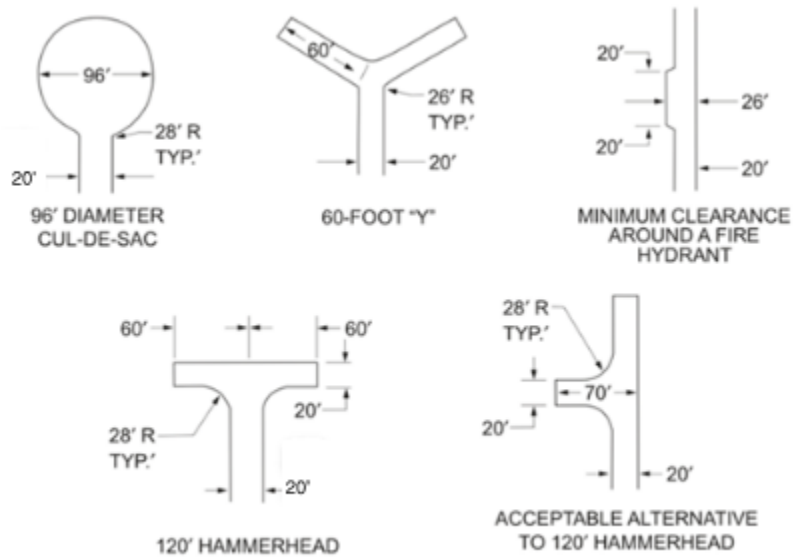

For SI: 1 foot = 304.8 mm.

FIGURE 503.2.5
DEAD-END FIRE APPARATUS ACCESS ROAD TURNAROUND

Section 503.2.6.1 Grade-level structural deck is added as follows:

503.2.6.1 Grade-level structural deck. See Chapter 16 of the *Commercial Building Code* of the City and County of Denver for structural loading. All structural decks shall have permanent, all-weather load posting sign(s) indicating gross maximum vehicle loads, maximum tandem axle load and maximum single-axle load. Signs shall be posted in a conspicuous location at each deck entrance and shall be maintained by the owner at all times.

Section 503.2.7 Grade is replaced in its entirety as follows:

503.2.7 Grade. The grade of the fire apparatus access road shall not exceed 7 percent (4 degrees). All other criteria shall meet Transportation Engineering design criteria as specified by Denver Department of Transportation and Infrastructure.

Section 503.2.8 Angles of approach and departure is replaced in its entirety as follows:

503.2.8 Angle of approach and departure. The angles of approach and departure for fire apparatus access roads shall not exceed 6 degrees or based on the manufacturer's published minimums as *approved* by the *fire code official*.

Section 503.3 Marking is amended by adding the following sentence at the end of the section:

Signs shall have a 12-inch by 18-inch dimension and shall comply with the Traffic Engineering Services Department of Transportation and Infrastructure Sign Manual as depicted in Figure 503.3. Maximum distance between signs shall be no more than 200 feet. Arrows shall point to the area of enforcement.

FIGURE 503.3

FIRE LANE SIGNS

Sections 503.4.1 Traffic calming devices is replaced as follows:

503.4.1 Traffic calming devices. Prior to placement, traffic calming devices shall be approved by the *fire code official.* Where *approved*, devices shall comply with Denver Department of Transportation and Infrastructure's Rules and Regulations and specifications including speed cushions and traffic circles

Sections 503.6.1 Width and 503.6.2 Approved means of emergency operation are added as follows:

503.6.1 Width. Security gates across a fire apparatus access road shall be a minimum 16-feet wide.

503.6.2 Approved means of emergency operation. Secured gates across a fire apparatus access road shall be provided with one or more of the following features:

1. Key box in accordance with Section 506.
2. An *approved* lock
3. Chains used to secure gates shall be ¼-inch maximum, non-case-hardened steel.
4. Emergency operation *approved* by *fire code official*.

SECTION 504
ACCESS TO BUILDING OPENINGS AND ROOFS

Section 504.1 Required access is amended by adding the following at the end of the paragraph:

A five-foot wide (1524 mm) access walkway leading from fire apparatus access roads to required exterior openings shall be provided. The location and configuration shall be *approved* by the *fire code official*.

Exception: The *fire code official* is permitted to require a lesser width.

Section 504.4 Roof hatches is added as follows:

504.4 Roof hatches. All *interior exit stairways and ramps* extending to the uppermost *story* in buildings four or more *stories above grade plane* shall be provided with a roof hatch openable to the exterior. The hatch shall be a minimum of 16 square feet (1.5 m2) in area with a minimum dimension of 2 feet (610 mm).

Exceptions:

1. Pressurized stairway enclosures.
2. Enclosures of *interior exit stairways and ramps* that extend to the roof in accordance with Sections 1011.12 and 1011.12.2 of the *International Building Code* and are provided with a penthouse complying with Section 1510.2 of the *International Building Code*.
3. *Buildings* with all roof slopes exceeding 4 units vertical in 12 units horizontal (33-percent).

Section 504.5 Courts is added as follows:

504.5 Courts. For buildings of Type III, IV, or V construction, access to grade level courts shall be provided from two remote locations. Access points shall be comprised of open-air breezeways not less than 6 feet (1829 mm) wide and not less than the height of the first story of the building. The breezeways shall lie perpendicular and shall have direct view of the court from the frontage location. Where access gates are provided, a key box shall be placed at each entrance. Locations and configurations shall be *approved* also in accordance with Sections 202, 1004.7, 1029 and Section 1205.3 of the *Denver Commercial Building Code*).

SECTION 505
PREMISES IDENTIFICATION

Section 505.1 Address identification is replaced, and an exception added as follows:

505.1 Address identification. New and existing buildings shall be provided with *approved* address identification. The address identification shall be legible and placed in a position that is visible from the street or road fronting the property. Address identification characters shall contrast with their background. Address numbers shall be Arabic numbers or alphabetical letters. Numbers shall not be spelled out. Each character shall be not less than six inches (153 mm) high with a minimum stroke width of 3/4 inch (19.1 mm). Where required by the *fire code official*, address identification shall be provided in additional *approved* locations to facilitate emergency response

Where access is by means of a private road and the building cannot be viewed from the public way, a graphic site map monument (GSMM) shall be used to identify the structure(s). The GSMM shall be comprised of a monument, pole, sign or other means of identification of the address as *approved* by the *fire code official.* All address identification provided to facilitate emergency response shall be located at ALL entrances into the property.

All GSMM's shall comply with the following:

1. Shall maintain the visual clarity of the plastic/polycarbonate cover as scratches, markings, fading and other environmental conditions which deteriorate or reduce the intended legibility.
2. Shall be *approved* by the *fire code official* for location and compliance to the intended function.
3. Shall be located on the premises and out of the Right of Way (ROW).
4. Shall be part of the recurring fire alarm system maintenance, testing, and inspection program.
5. The complex name and address shall be located at the top of the GSMM with a minimum letter height of 1 inch with contrasting backgrounds. The streets shall be identified with minimum letter heights of 1 inch. It is recognized that all lettering and backgrounds may not contrast very well in certain ambient conditions and therefore it shall be the responsibility of the property owner to meet the intent of legibility during an emergency response.
6. Shall be sized so that the building numbers are a minimum of 1 1⁄4 inches in height with contrasting backgrounds. It is recognized that all lettering and backgrounds may not contrast very well in certain conditions and therefore shall be the responsibility of the property owner to meet the intent of legibility during emergency response.
7. Shall include at a minimum: building name; building address, north orientation arrow, "YOU ARE HERE" in contrasting and bold font, adjacent streets & local fire hydrants.

Exception: Existing dwellings regulated by the *Denver Residential Code*.

SECTION 507
FIRE PROTECTION WATER SUPPLIES

Section 507.2 Type of water supply is replaced as follows:

507.2 Type of water supply. A water supply shall be connected to a reliable public water works system.

Section 507.2.1 Private fire service mains is deleted in its entirety.

Section 507.2.2 Water tanks is replaced as follows:

507.2.2 Water tanks. New water tanks for fire protection shall be prohibited.

Exceptions:

1. Water tanks for fire protection, when *approved* by the *fire code official*, are permitted for NFPA 13D systems in accordance with Section 903.3.1.3.
2. Existing water tanks for fire protection that were previously *approved* by the Fire Department. These tanks shall be inspected, tested and maintained in accordance with NFPA 25.

Section 507.2.3 Water supply serving high-rise buildings is added as follows:

507.2.3 Water supply serving high-rise buildings. High-rise buildings as classified by the Denver Commercial Building Code shall be supplied by connections to a minimum of two public water mains located in different streets. Separate supply piping shall be provided between each water main connection and the building. Backflow prevention devices and flow switches shall be provided in accordance with Section 912.6 at each water main entry to the structure. Each fire main shall be sized to meet the full demand of the fire protection system at each connection to achieve redundancy.

Exception: Where *approved* by the *fire code official*, high-rise buildings without access to different water mains shall have two fire main connections to the same public main. The public main shall have valves such that an interruption of one water source can be isolated so that water supply will continue without interruption through the other connection. The two required fire mains shall have a minimum separation distance from each other of five feet at all points from the public main to the building. Each fire main shall be sized to meet the full demand of the fire protection system at each connection to achieve redundancy.

Section 507.3 Fire flow is replaced as follows:

507.3 Fire flow. Fire flow requirements shall be as determined in Appendix B. Each new or existing fire hydrant as required in accordance with Appendix C, shall be capable of providing not less than 1500 GPM at 20 PSI residual pressure.

Section 507.5.3 Private fire service mains and water tanks is replaced as follows:

507.5.3 Private fire service mains and water tanks. Private fire service mains and water tanks are not permitted except for existing systems previously *approved* by the Fire Department or as allowed in Section 507.2.2. Existing private service mains and water tanks shall be periodically inspected, tested and maintained in accordance with NFPA 25 at the following intervals:

1. Private fire hydrants (all types): Inspection annually and after each operation; flow test and maintenance annually.
2. Fire service main piping: Inspection of exposed, annually; flow test every five years.
3. Fire service main piping strainers: Inspection and maintenance after each use.

Section 507.5.5 Clear space around hydrants is replaced as follows:

507.5.5 Clear space around hydrants. A five-foot (1524 mm) clear space shall be maintained around the circumference of fire hydrants, except as otherwise required or *approved*.

SECTION 508
FIRE COMMAND CENTER

Section 508.1 General is replaced as follows:

508.1 Fire command center (FCC). An FCC shall be provided for the following:

1. Where required by Section 907, 909 or 910.
2. All high-rise buildings
3. All F-1 and S-1 occupancies with a building footprint greater than 500,000 square feet (46 452 m2)

Section 508.1.05 FCC construction requirements is added as follows:

508.1.-05 FCC construction requirements. No piping, ducts, or equipment foreign to required fire operations shall be permitted to enter, pass through or be installed within the FCC. Scale drawings of the FCC showing the location of all equipment and features, in plan and elevation views, shall be submitted for approval prior to installation

Section 508.1.1 Location and access is replaced as follows:

508.1.1 Location and access. The FCC shall:

1. Be on the ground floor.
2. Have a secured entrance directly accessible to and in immediate proximity of the main building entrance.
3. Have access within the building to all fire service access elevators.

   Exception: Unless otherwise *approved* by the *fire code official*.

Section 508.1.2 Separation is replaced as follows:

508.1.2 Separation. To meet the system survivability requirements of NFPA 72, the FCC shall be separated from the remainder of the building by not less than a 2-hour fire barrier constructed in accordance with Section 707 of the *Denver Commercial Building Code* or a horizontal assembly in accordance with Section 711 of the *Denver Commercial Building Code* or both.

Section 508.1.6 Required features is replaced as follows:

508.1.6 Required features. The FCC shall contain the following:

1. Emergency voice/alarm communication system unit in accordance with Section 907.5.2.2.
2. Fire Department communication system in accordance with Section 907.2.13.2
3. Fire alarm control unit and annunciator in accordance with Sections 907.1.5 and 907.6.4.1.
4. Elevator status/control panel in accordance with Section 907.2.13.7
5. Firefighter's smoke control panel in accordance with Section 909.8.
6. Manual controls for simultaneously unlocking stairway and refuge area doors in accordance with Section 1010.2.7 of the *Denver Commercial Building Code.*
7. Emergency generator status panel in accordance with Section 907.2.13.8.
8. Telephone with controlled access to a public telephone network.
9. Fire pump remote status panel in accordance with Section 907.2.13.9.
10. Building as-built construction plans indicating typical floor and roof plans, detailing the building core, means of egress, fire protection system drawings, firefighting equipment, fire department access, interior generator and utility shut-off locations. These drawings shall be protected from damage and immediately accessible to the fire department. A storage rack to support these drawing shall be provided.
11. Building site plan with "North" orientation, local street intersection, fire hydrants, Fire Department connections, building entries, exterior generator and fuel locations and exterior utility shut-off locations.
12. 3-foot by 5-foot work table with a chair.
13. Public address system equipment, where specifically required by other sections of this code.
14. A key vault *approved* by the Fire Department to house keys to access mechanical and electrical equipment.
15. Two-way communication required by Sections 1009.6.5, 1009.8, 1010.2.16.7 Item 3.2, and 3008.6.6 of the *Denver Commercial Building Code* and two-way communication system required for elevator communication in accordance with ASME A17.1.

16. Multi-level lighting control. Separately switched lamps or dimming control is acceptable. Dimming of fluorescent fixtures shall be by EMI/RFI shielded devices.

17. Mass Notification System (MNS) equipment.

18. Heating/cooling zone or system.

Section 508.1.8 Heating/cooling zone or system for FCC is added as follows:

508.1.8 Heating/cooling zone or system for FCC. A separate heating/cooling zone or system operating continually shall be provided for the Fire Command Center.

Section 508.2 Fire command room is added as follows:

508.2 Fire command room. A fire command room shall be provided in the following:

1. In a building with any emergency voice/alarm communication system.

2. In a building where the owner requests that the fire alarm and life safety equipment not be installed in the lobby of the building.

3. In a building where elevator cabs or lobbies must be monitored by surveillance equipment.

The fire command room shall be not less than 48 square feet (4.46 m^2) with a minimum dimension of 8 feet (2.44 m), but not less than that required to accommodate the equipment on one wall. A minimum clear dimension of 6 feet (1.82 m) shall be provided in front of the equipment. The room shall be separated from the remainder of the building by not less than a 1-hour fire barrier constructed in accordance with Section 707 of the *Denver Commercial Building Code*, or horizontal assembly constructed in accordance with Section 711 of the *Denver Commercial Building Code*, or both. The fire command room shall be located in accordance with Section 508.1.1 and shall contain the following equipment, where provided:

1. Fire alarm control unit.

2. Emergency voice/alarm communication equipment.

3. Smoke control panel.

4. Emergency/Standby generator status panel.

5. Fire Pump remote status panel.

6. MNS equipment.

7. Two-way communication required by Sections 1009.6.5, 1009.8, 1010. 2.16.7 Item 3.2 , and 3008.6.6 of the *Denver Commercial Building Code* and two-way communication system required for elevator communication in accordance with ASME A17.1.

8. Elevator surveillance equipment.

The building annunciator shall be located as *approved* by the *fire code official*.

Exception: Unless *approved* by the *fire code official.*

SECTION 509
FIRE PROTECTION AND UTILITY EQUIPMENT IDENTIFICATION AND ACCESS

Section 509.3 Location and access to indoor fire pumps is added as follows:

509.3 Location and access to indoor fire pumps. Fire pumps shall be located both at grade level and accessible directly from the outside. Location of the fire pump room is subject to approval by the *fire code official*.

Exceptions:

1. Fire pump rooms may be located one level below grade, provided that the following requirements are met:

   1.1 Maximum total travel distance from exterior access at grade level to the most remote portion of the fire pump room shall not exceed 60 feet.

   1.2 Stairways providing access shall comply with Section 1011 of the *Denver Commercial Building Code* and shall terminate at an exit discharge at grade level. Curved *stairways*, *spiral stairways*, *alternating tread devices*, ship's ladders, and ladders are prohibited.

   1.3 Travel path from the exterior to the fire pump room shall be through a corridor or exit passageway with a minimum fire-resistance rating to match interior exit stairway enclosure rating requirements for the building.

   1.4 No intervening rooms between the *stairway* termination and the fire pump room.

2. In high-rise buildings where the use of fire pumps arranged in series is required due to maximum pressure limitations, the fire pumps supplying the higher zones may be located above *grade* level.

3. In existing buildings where a new fire pump is being added or an existing fire pump is being replaced with a new fire pump of different nominal rating, the location and access shall be preplanned and *approved* by the *fire code official*.

4. Existing fire pumps, including where an existing fire pump and/or controller is being replaced with new equipment of the same nominal rating

Section 510 Emergency Responder Communication Coverage is replaced as follows:

SECTION 510
EMERGENCY RESPONDER RADIO ENHANCEMENT COVERAGE SYSTEM (RES)

510.1 Where required. Buildings shall have *approved* radio coverage in accordance with Section 510 for emergency responders as follows:

1. High-rise buildings

2. Underground buildings (constructed in accordance with Section 405 of the *Denver Commercial Building Code*)

3. Airport buildings and structures

510.1.1 Compliance testing. New buildings of 50,000 gross square feet or more and all new Group E and I occupancies over 10,000 gross square feet sf on any story shall be tested upon substantial construction completion and where lacking required coverage, shall be provided with an RES. Buildings having compliant initial radio coverage shall be tested every five years thereafter in accordance with Section 510.3.1.1 for continued adequacy of emergency responder radio communications coverage. Buildings failing to meet the minimum coverage requirements after testing shall be provided with a RES in accordance with Section 510. Where it is determined by the *fire code official* the radio coverage system is not needed, written documentation of the adequacy of existing radio coverage shall be maintained on site.

510.1.2 Emergency responder radio coverage in existing buildings. For existing high-rise, underground buildings, I-1, I-2 and I-3 occupancies and airport buildings, when undergoing an upgrade to install a Mass Notification System (MNS) or complete fire alarm head-end equipment replacement, the building shall be tested to Section 510 for public safety radio coverage and where deficient, RES coverage shall be provided. Buildings with currently acceptable signal strength shall be retested at five-year intervals in accordance with Section 510.3.1.1 to ensure continued compliant radio coverage. Where it is determined by the *fire code official* the radio coverage system is not needed, written documentation of the adequacy of existing radio coverage shall be maintained on site.

510.2 Emergency responder radio enhancement system coverage in buildings. Where required by Section510.1, buildings shall have *approved* radio coverage for emergency responders within the building based upon the existing coverage levels of the Department of Safety communication system at the exterior of the building. Systems shall be designed per Section 510 and NFPA 1221. Systems shall operate at the frequency of 806-816MHz and 851-861MHz. This section shall not require improvement of the existing Department of Safety communication system. Active components Bi-directional Amplifiers (BDA), Distributed Amplifier System (DAS) controller, UPS), of the RES system shall be installed in a room separated from the remainder of the building by a minimum 1-hour fire-resistance rated fire barrier constructed in accordance with Section 707 of the *Denver Commercial Building Code* or a one-hour fire resistance rated horizontal assembly constructed in accordance with Section 711 of the *Denver Commercial Building Code* or both. The Emergency Responder Radio Enhancement Coverage system shall be a standalone system totally dedicated to public safety and no components of this system may be shared with any other radio or cell phone systems. Modification, alteration, repair or removal of any RES system or component is specifically prohibited without the approval of the *fire code official*.

Exception: Where it is determined by the *fire code official* that current radio coverage within the building is adequate, written documentation of the compliance of radio coverage shall be maintained on site. See Section 510.3.1 for testing requirements.

510.2.1 Coverage Requirement. The radio system control channel signal level shall exceed -100 dBm at 95 percent or more of the locations measured within each floor plate. Equivalently, the service area reliability shall be 95 percent or greater on each floor of the structure and parking areas. All designated areas of refuge, Fire Command Centers, stairwells, main building lobbies and elevator lobbies shall have 100 percent signal coverage of -100dBm or stronger. Inbound and outbound signals shall be sufficient to provide usable voice communications throughout the coverage areas and sufficient to provide not less than a Delivered Audio Quality (DAQ) of 3.0 or an equivalent Signal-to-Interference-Plus-Noise Ratio (SINR) applicable to the technology for either analog or digital signals.

510.3 Radio systems. The RES system shall meet the coverage requirements defined in this section, and comprise one of following: bi-directional amplifiers with radiating ("leaky coax") cable; a discrete distributed antenna system; or other fire department *approved* equivalent technology. Radio communications systems shall only operate on the frequency range of 806-816MHz and 851-861MHz. All active electronic components in the RES system shall be powered by a dedicated uninterruptible power source (UPS) with a minimum backup time of 12 hours with all amplifiers at rated output. The UPS input circuit shall be a dedicated circuit and any cord and plug connection(s) shall be secured in an *approved*

cabinet to prevent inadvertent disconnection. The circuit shall also be connected to the emergency generator where one is provided. The circuit shall be provided with a "lock-on" device. The RES system shall be maintained in an operative condition at all times.

Exceptions:

1. In buildings provided with an emergency generator in accordance with Section 604, UPS minimum battery capacity shall be permitted to be 4 hours.
2. Where a legally required standby generator is installed in accordance with Section 604, and the UPS input circuit is automatically transferred to the generator source, UPS minimum battery capacity shall be permitted to be 4 hours.

510.3.1 Requirements. The system shall operate throughout the structure in accordance with this section. Radio communication coverage is required throughout parking garages and all areas below grade. Acceptance of the installed communication system shall be based upon Fire Department approval of the acceptance test as described below. All RES equipment shall be FCC compliant including but not limited to FCC 47 CFR Part 90.219. Equipment shall be listed in accordance with UL 2524.

510.3.1.1 Acceptance test. Test procedures shall comply with DFD Policy 510-1. Measurement locations shall be uniformly distributed to the extent practical. There shall be at least 10 sampling measurements per 4,000 square feet (one per every 20-foot X 20-foot square) of gross building area. Adequate radio coverage shall be determined for the structure and parking areas separately. Elevators, stairways and enclosed areas within each grid must be included in the testing. Where grid points exhibit marginal RF signal levels, DFD personnel will perform a radio test to determine if intelligible transmissions can be made through the enhanced radio system to and from the individual grid point without the need for retransmission. If this test fails, communications will be considered inadequate at that grid location and that grid will have failed to meet the required signal level.

510.3.1.2 Periodic testing. RES shall be tested annually and at five-year intervals in accordance with DFD Policy 510-1. Additional testing may be required by the department where building modifications have the potential to degrade system performance.

510.3.1.3 Failure detection. RES equipment, including the RES amplifier and DAS controller if available, shall have failure detection circuitry which provides detection of mechanical, electrical and power failure of these components, as well as oscillation detection capability which will reduce the amplifier output to zero in the event of system oscillation. Detection of any failure output from an amplifier or main DAS controller, if provided, shall annunciate at the building fire alarm panel and result in a distinct local audible notification and transmission of a supervisory signal to the central monitoring station. RES system repairs shall be accomplished within 72 hours.

510.3.1.4 Permits. A construction permit is required prior to installation, expansion or replacement of any RES. Submittal and approval of shop drawings are required to obtain a permit. Permits shall only be issued to companies possessing a current Denver Electrical Signal or Electrical Contractors license and a valid Fire Department issued certificate. An annual Denver Fire Department permit for the RES shall be obtained and maintained current by the building owner. Alterations, modifications, repairs and required testing of RES shall require an operational permit issued by the department to the DFD licensed contractor performing the work.

510.3.1.5 Information signs. A legible sign stating **"THIS BUILDING IS EQUIPPED WITH A PUBLIC SAFETY RADIO REPEATER SYSTEM"** shall be conspicuously posted at the fire alarm panel. An additional sign stating, **"THIS BUILDING IS EQUIPPED WITH A PUBLIC**

SAFETY RADIO REPEATER SYSTEM-- DO NOT TAMPER WITH OR DISCONNECT," shall be located at each RES amplifier location. Signs shall be constructed of plastic or metal and shall be *approved* by the *fire code official*.

510.3.1.6 Shop drawings. Shop drawings, including RF grids, shall be submitted in accordance with Appendix O and *approved* prior to installation of any RES. Drawings shall be a deferred submittal in accordance with Section 133.4 of the Administration of the Denver Building Code. Documents shall be of sufficient clarity and detail to fully describe the proposed installation and equipment. Handwritten notes or comments on drawings are not acceptable.

510.3.1.7 System Monitoring. The RES shall be monitored by a listed fire alarm control unit, or where *approved* by the *fire code official*, shall sound an audible signal at a constantly attended on-site location. Automatic supervisory signals shall include the following:

1. Loss of normal AC power supply.
2. System battery charger failure.
3. Malfunction of the donor antenna(s).
4. Failure of active RF-emitting device(s).
5. Low-battery capacity at 70-percent reduction of operating capacity.
6. Failure of critical system components.
7. The communications link between the fire alarm system and the RES.
8. Oscillation of active RF-emitting device(s).

510.3.1.8 RES antenna density. Systems shall be engineered to minimize the near-far effect and shall include sufficient antenna density to address reduced gain conditions.

Exception: Systems where all portable devices within the same band use active power control features.

510.4 Wiring methods. Installation wiring for radio communications shall comply with the manufacturer's recommendations, equipment listings, NFPA 1221 and NFPA 70 (NEC). Radiating cables shall be FCC type *approved* and installed using manufacturer's specifications to secure cables to the supporting structure. All terminations shall be made with manufacturer's *approved* devices. Cable cuts shall be made with manufacturer *approved* tools and methods. Limited-use cable is not permitted. All membrane or through penetrations shall comply Section 714 of the *Denver Commercial Building Code*.

510.4.1 RES cable in buildings. In buildings, installation of riser cable and amplifiers for distributed antenna systems shall be located in stacked electrical rooms or telephone rooms or shaft enclosures matching the building's fire rating and constructed in accordance with Section 707 or 713 of the *Denver Commercial Building Code*. Wiring runs from an RES unit amplifier to a riser shall be made within an enclosure that matches the building's fire rating and constructed in accordance with Section 707 of the *Denver Commercial Building Code* or Section 711 of the *Denver Commercial Building Code*, or both.

510.5 Maintenance. Maintenance of the RES shall be the responsibility of the building owner and requires an operational permit issued by the department for any maintenance, repair or modification work. The building owner shall maintain a service contract for emergency repair with response to the site within two (2) hours of notification.

510.5.1. Radio frequency maintenance plan. A radio frequency maintenance plan shall be developed which prohibits use of electrical/electronic equipment which cause degradation to the RES. The radio frequency maintenance plan shall comply with the following at a minimum:

1. Prohibit the use of any electronic systems known to degrade the effectiveness of RES communications.
2. Permit Department site access during reasonable business hours, when necessary, to assess the source of interference to RES communications.
3. Be incorporated into the lease of every tenant.

510.6 Installer certification. No contractor shall install, modify, repair, alter or replace an RES without a valid Denver Fire Department license. All field installers shall be individually certified by the manufacturer for the equipment being installed. Each certified installer shall be permitted to supervise one apprentice/helper.

510.7 Records. Records of all system inspections, RES uplink and downlink gain settings, maintenance, annual tests and five-year test results shall be maintained on the premises in the "RES System Maintenance and Test Results Log Book" which shall remain on the building premises and shall be available to the *fire code official* upon request.

CHAPTER 6
BUILDING SERVICES AND SYSTEMS

SECTION 604
ELEVATOR OPERATION, MAINTENANCE, AND FIRE SERVICE KEYS

Section 604.2 Emergency operation is replaced as follows:

604.2 Emergency operation. New and altered elevators and conveying systems shall comply with Section 920 and_Chapter 30 of the *Denver Commercial Building Code*. Elevators undergoing a controller replacement or alteration as defined in Colorado Code of Regulations 7CCR 1101-8 or ASME A17.1 shall be provided with Phase I emergency recall operation and Phase 2 emergency in-car operation. Existing elevators with a travel distance of 25 feet (7620mm) or more shall comply with the requirements of Chapter 11. All other alterations to existing elevators shall comply with State of Colorado requirements.

Section 604.3 Standby power and all of its subsections are replaced as follows:

604.3 Emergency or standby power. In buildings and structures where emergency or standby power is required or furnished to operate an elevator, emergency or standby power shall be provided in accordance with Section 1203. Operation of the system shall be in accordance with Sections 604.3.1 through 604.3.4 an illuminated indicator shall be provided in the elevator lobby(ies) at the designated level in accordance with ASME A17.1.

604.3.1 Manual transfer. Emergency or standby power shall be manually transferable to all elevators in each bank.

604.3.2 One elevator. Where only one elevator is installed, the elevator shall automatically transfer to emergency or standby power within 10 seconds for an emergency power source and 60 seconds for a standby power source after failure of normal power.

604.3.3 Two or more elevators. Where two or more elevators are controlled by a common operating system, all elevators shall automatically transfer to emergency or standby power within 10 seconds for an emergency power source and 60 seconds for a standby power source after failure of normal power where the emergency/standby power source is of sufficient capacity to operate all elevators at the same time. Where the emergency/standby power source is not of sufficient capacity to operate all elevators at the same time, all elevators shall transfer to emergency/standby power in sequence, return to the designated landing and disconnect form the emergency/standby power source. After all elevators have been returned to the designated level, not less than one elevator shall remain operable from the emergency/standby power source.

604.3.3.1 Two or more elevators in high-rise buildings without fire service access elevators. In high-rise buildings without fire service access elevators, not less than two elevators shall remain simultaneously operable from the emergency power source. One of these elevators shall be the elevator required to accommodate an ambulance stretcher. All elevators shall be manually transferable to the emergency power source in accordance with Section 604.3.1.

Exception: Sufficient emergency power shall be provided for not less than one elevator that only serves open parking levels of the high-rise building.

604.3.3.2 Elevators in high-rise buildings with fire service access elevators, but without occupant evacuation elevators. In high-rise buildings with fire service access elevators, but without occupant evacuation elevators, no less than three elevators shall remain simultaneously operable from the emergency power source and elevators shall be capable of accessing all floors of the building. Where an elevator transfer floor is provided in order to provide access to all building floors, a minimum of five elevators shall be required for simultaneous operation on the emergency power source. Emergency power shall be provided to the required fire service access elevators in accordance with Section 3007.8 of the *Denver Commercial Building Code*. The designated non-fire service access elevator(s) shall be capable of having the emergency power manually transferrable to any other non-fire service access elevator(s) in accordance with Section 604.3.1.

Exception: Sufficient emergency power shall be provided for not less than two elevators that only serve~~s~~ open parking levels of the high-rise building.

604.3.4 Machine room ventilation. Where standby power is connected to elevators, the machine room ventilation or air conditioning shall be connected to the emergency or standby power source.

Section 604.4.1 Signage for existing elevators without a visual signal (flashing firefighter hat) is added as follows:

604.4.1 Signage for existing elevators without a flashing hat indicator. Existing elevators with shunt trip capability that do not provide a visual signal (flashing firefighter hat) indication in accordance with Section 907.3.3.5 shall have an *approved* sign mounted adjacent to the FACP stating; **"CAUTION – Elevator is not equipped with "Visual Signal."** Sign shall be black lettering on a yellow background.

Section 604.6.2 Exception is replaced as follows:

Exception: The owner shall place the building's existing, *approved* non-standardized fire service elevator keys in a key box complying with Section 506.1.2.

Section 604.6.2.1 is amended by adding items 5 and 6 as follows:

5. Keys shall be Group 3 security in accordance with ASME A17.1 and shall comply with DFD Policy 604.61.
6. All standardized fire service elevator keys located at the building shall be numbered sequentially by indelible marking and a key log shall be maintained on site that identifies the location and holder of each key. When a holder is no longer qualified to maintain possession of a key, the key shall be returned to the issuing authority for subsequent distribution in accordance with this code.

Section 604.6.2.1.1 New elevator installations is added as follows:

604.6.2.1.1 New elevator installations. Where a new elevator is installed as part of an existing group of elevators with a common controller, all elevators in the group shall be upgraded to the same firefighters' emergency operation as required by this Code.

Section 604.6.2.1.2 Alterations to elevators is added as follows:

604.6.2.1.2 Alterations to elevators. Where an existing elevator is modified under any alteration encompassing a scope of work as described under Colorado Code of Regulations, 7 CCR 1101-8 or ASME A17.1 the altered elevator shall be provided with a standardized key. Where the altered elevator is part of an existing group of elevators with a common controller, all elevators in the group shall be retrofitted with a standardized key.

Exception: Elevators without existing Phase 1 and Phase 2 operation.

Section 604.6.2.1.3 Existing elevator installations is added as follows:

604.6.2.1.3 Existing elevator installations. Key switches required for Firefighters' Emergency Operation and Emergency or Standby Power Systems selection on all elevators within a building shall be retrofitted with the *approved* standardized key.

Section 604.6.2.3 is replaced as follows:

604.6.2.3 Duplication or distribution of keys. No person may possess a standardized fire service elevator key unless in accordance with this code. Duplication of keys is not permitted. Unauthorized distribution/duplication of keys is subject to the penalties of Section 112.3.2.1.

Section 604.6.2.4 is replaced as follows:

604.6.2.4 Responsibility to provide keys. A key shall be provided for each switch installed. Standardized fire service access keys shall be maintained in an *approved* lock box within a secured fire command center in accordance with Section 508 where provided, or an *approved*~~,~~ listed key box in accordance with Section 506.

Section 604.8 Elevator recall for high-rise buildings with pressurized hoistways is added as follows:

604.8 Elevator recall for high-rise buildings with pressurized hoistways. In addition to the requirements of ASME A17.1, Firefighters' service elevator operation within high-rise buildings with pressurized hoistways shall be as follows:

1. The elevator doors shall automatically open when the car reaches the designated level. After a period of one minute, elevators shall automatically close their doors. The doors shall be responsive by pressing the designated return floor call button in the elevator lobby or by pressing the door open button in the interior of the elevator cab. Elevators shall remain at that level until manually overridden by the key-operated switch required by ASME A17.1.
2. Only the hall call buttons at the designated return level, the level the car(s) have returned to, shall function as door open buttons. All doors shall open simultaneously when operating under normal building power. When operating under emergency power, only the cars selected for emergency operation shall open their doors simultaneously.
3. During Phase 1 operation, the door recycle shall be 60 seconds.
4. Once the car is placed on Phase II, the fire department has control of the elevator; it shall operate in accordance with ASME A17.1, Section 2.27.3.3.

Section 604.9 Fire service access elevators is added as follows:

604.9 Fire service access elevators. Installation of fire service access elevators shall comply with Section 920 and Section 3007 of the *Denver Commercial Building Code*.

Section 604.10 Occupant evacuation elevators is added as follows:

604.10 Occupant evacuation elevators. Installation of occupant evacuation elevators shall comply with Section 920 and Section 3008 of the *Denver Commercial Building Code*.

SECTION 605

FUEL-FIRED APPLIANCES

Section 605.5 Portable unvented heaters is replaced as follows:

605.5 Portable unvented heaters. Portable unvented fuel-fired heating equipment is prohibited within the City and County of Denver.

Section 605.8.1 Residential incinerators is replaced as follows:

605.8.1 Residential incinerators. Residential incinerators are prohibited within the City and County of Denver.

SECTION 608

MECHANICAL REFRIGERATION

Section 608.9 Refrigerant detection is replaced as follows:

608.9 Refrigerant detection. Machinery rooms shall be provided with a refrigerant detector with an audible and visible alarm. Where ammonia is used as the refrigerant, detection shall comply with IIAR 2 and Section 916. For refrigerants other than ammonia, refrigerant detection shall comply with Section 608.9.1.

Section 608.9.1 Refrigerants other than ammonia is amended by adding the following to the beginning of the section and 1. is amended as shown:

608.9.1 Refrigerants other than ammonia. Machinery rooms shall contain refrigerant leak detection and initiate an emergency alarm in accordance with this section and Section 916. The leak detection control unit shall provide a readout displaying the concentration of refrigerant gas detected. Accurate detector calibration shall be demonstrated during acceptance testing. Signage required by Section 916.9 shall state, outside the room **"DO NOT ENTER WHEN LIGHT IS FLASHING – REFRIGERANT LEAK DETECTED"** and inside the room **"FLASHING LIGHT MEANS REFRIGERANT LEAK DETECTED – EVACUATE ROOM AND BUILDING."**

1. The corresponding ~~TLV-TWA~~OEL values shown in the ~~International~~ Denver Mechanical Code for the refrigerant classification.

Section 608.17 Electrical Equipment exception #2 has been deleted:

Exception~~s~~:

Ammonia machinery rooms that are provided with ventilation in accordance with Section 1101.1.2, ~~Exception 1,~~ of the ~~International~~ Denver Mechanical Code.

~~Machinery rooms for systems containing Group A2L refrigerants that are provided with ventilation in accordance with Section 608.18.~~

Section 608.18 Special requirements for Group A2L refrigerant machinery rooms has been deleted:

~~**608.18 Special requirements for Group A2L refrigerant machinery rooms.** Machinery rooms with systems containing Group A2L refrigerants that do not comply with the Class I, Division 2, hazardous location electrical requirements of NFPA 70, as permitted by Section 608.17, Exception 2, shall comply with Sections 608.18.1 through 608.18.2.~~

Section 608.18.1 Ventilation system activation has been deleted:

~~**608.18.1 Ventilation system activation.** Ventilations shall be activated by the refrigerant detection system in the machinery room. Refrigerant detection shall be in accordance with Section 608.9 and all of the following:~~

1. ~~The detectors shall activate at or below a refrigerant concentration of 25 percent of the LFL.~~
2. ~~Upon activation, the detection system shall activate the emergency ventilation system in Section 608.18.2.~~
3. ~~The detection, signaling and control circuits shall be supervised.~~

Section 608.18.2 Emergency ventilation system has been deleted:

~~**[M] 608.18.2 Emergency ventilation system.** An emergency ventilation system shall be provided at the minimum exhaust rate specified in AHSRAE 15 or Table 608.18.2. Shut down of the emergency ventilation system shall be by manual means.~~

Table 608.18.2 Minimum exhaust rate has been deleted:

~~**[M] Table 608.18.2 Minimum exhaust rate.**~~

~~REFRIGERANT~~	~~Q (M³/SEC)~~	~~Q (CFM)~~
~~R32~~	~~15.4~~	~~32,600~~
~~R143a~~	~~13.6~~	~~28,700~~
~~R444A~~	~~6.46~~	~~13,700~~
~~R444B~~	~~10.6~~	~~22,400~~
~~R445A~~	~~7.83~~	~~16,600~~
~~R446A~~	~~23.9~~	~~50,700~~
~~R447A~~	~~23.8~~	~~50,400~~
~~R451A~~	~~7.04~~	~~15,000~~
~~R451B~~	~~7.05~~	~~15,000~~
~~R1234yf~~	~~7.8~~	~~16,600~~
~~r1234ze€~~	~~5.92~~	~~12,600~~

Section 608.18.3 Emergency ventilation system discharge has been deleted:

~~**608.18.3 Emergency ventilation system discharge.** The point of discharge to the atmosphere shall be located outside of the structure at not less than 15 feet (4572 mm) above the adjoining grade level and not less than 20 feet (6096 mm) from any window, ventilation opening or exit.~~

Section 608.18 Group A2L and B2L refrigerant has been added as follows:

[M] 608.18 Group A2L and B2L refrigerant. Machinery rooms for Group A2L and B2L refrigerant shall comply with ASHRAE 15.

CHAPTER 8
INTERIOR FINISH, DECORATIVE MATERIALS AND FURNISHINGS

SECTION 806
NATURAL DECORATIVE VEGETATION IN NEW AND EXISTING BUILDINGS

Section 806.5 Combustible natural vegetation is added as follows:

806.5 Combustible natural vegetation. Limited quantities of combustible natural vegetation shall be permitted in A, E, I-3, R-1, R-2/Dormitory, and R-4 occupancies where the *fire code official* determines adequate safeguards are provided based on the quantity and nature of the vegetation. Flame resistance shall be demonstrated in an *approved* manner for each item of vegetation. The use of unlisted electrical wiring and lighting on combustible natural vegetation is prohibited.

SECTION 807
DECORATIVE MATERIALS AND ARTIFICIAL VEGETATION IN BUILDINGS

Section 807.5.2.2 Artwork in corridors is replaced as follows:

807.5.2.2 Artwork in corridors. Artwork and teaching materials shall be limited on walls of corridors to not more than 30 percent of the area of each wall to which they are attached. The height from the floor to the ceiling multiplied by the length of the wall excluding door and window openings is considered the area of each wall. Artwork and teaching materials shall not be attached to any wall within 18 inches of the exit access door. Doors and windows, including view panels of interior exit access doors, shall not be covered. The use of crepe paper that is not listed as flame resistant is prohibited.

Exceptions:

1. These area limitations do not apply to artwork and teaching materials listed as non-combustible.
2. Artwork and teaching materials contained within fully enclosed, non-combustible or limited combustible containers or coverings such as metal and glass display cases are not required to be included in the area limitations.
3. Corridor walls may be used to attach artwork and teaching materials not to exceed 60 percent of the area of each wall when the building is protected throughout by an automatic fire sprinkler system in accordance with Section 903.3.1.1.

Section 807.5.2.3 Artwork in classrooms is replaced as follows:

807.5.2.3 Artwork in classrooms. Artwork and teaching materials shall be limited on walls of classrooms to not more than 50 percent of the area of each wall to which they are attached. Artwork and teaching materials shall not be attached to any wall within 18 inches of the exit access door.

Exceptions:

1. Classroom walls may be used to attach artwork and teaching materials not to exceed 80 percent of the area of each wall when the building is protected throughout by an automatic fire sprinkler system in accordance with Section 903.3.1.1. The height from the floor to the ceiling multiplied by the length of the wall excluding door and window openings is considered the area of each wall.
2. These area limitations do not apply to artwork and teaching materials listed as non-combustible.
3. Artwork and teaching materials contained within fully enclosed, non-combustible or limited combustible containers or coverings such as metal and glass display cases are not required to be included in the area limitations.

Section 807.5.5.2 Artwork in corridors is replaced as follows:

807.5.5.2 Artwork in corridors. Artwork and teaching materials shall be limited on walls of corridors to not more than 30 percent of the area of each wall to which they are attached. The height from the floor to the ceiling multiplied by the length of the wall excluding door and window openings is considered the area of each wall. Artwork and teaching materials shall not be attached to any wall within 18 inches of the exit access door. Doors and windows, including view panels of interior exit access doors, shall not be covered. The use of crepe paper that is not listed as flame resistant is prohibited.

Exceptions:

1. Corridor walls may be used to attach artwork and teaching materials not to exceed 60 percent of the area of each wall when the building is protected throughout by an automatic fire sprinkler system in accordance with Section 903.3.1.1.
2. These area limitations do not apply to artwork and teaching materials listed as non-combustible.
3. Artwork and teaching materials contained within fully enclosed, non-combustible or limited combustible containers or coverings such as metal and glass display cases are not required to be included in the area limitations.

Section 807.5.5.3 Artwork in classrooms is replaced as follows:

807.5.5.3 Artwork in classrooms. Artwork and teaching materials shall be limited on walls of classrooms to not more than 50 percent of the area of each wall to which they are attached. Artwork and teaching materials shall not be attached to any wall within 18 inches of the exit access door.

Exceptions:

1. Classroom walls may be used to attach artwork and teaching materials not to exceed 80 percent of the area of each wall when the building is protected throughout by an automatic fire sprinkler system in accordance with Section 903.3.1.1. The height from the floor to the ceiling multiplied by the length of the wall excluding door and window openings is considered the area of each wall.
2. These area limitations do not apply to artwork and teaching materials listed as non-combustible.
3. Artwork and teaching materials contained within fully enclosed, non-combustible or limited combustible containers or coverings such as metal and glass display cases are not required to be included in the area limitations.

Section 807.6 Ceiling artwork and teaching materials is added as follows:

807.6 Ceiling artwork and teaching materials. Artwork and teaching materials suspended from classroom and corridor ceilings shall be in accordance with the following:

1. Where permitted by Section 701.2.1, the ceiling structure must be capable of supporting the artwork and teaching materials.

2. The total area of materials suspended from ceilings plus the covered area of each adjacent wall shall not exceed the wall areas permitted to be covered in accordance with Sections 807.5.2.2, 807.5.2.3, 807.5.5.2 and 807.5.5.3.

3. Display of artwork and teaching materials shall not impair visibility or distract attention from any egress signage or alarm notification appliance.

4. No material shall be attached to electrified fixtures, electrical wiring, egress signage, plumbing, fire alarm components, fire sprinkler components, etc.

5. The display of artwork or teaching materials shall not obstruct or compromise in any manner the fire sprinkler or fire detection system.

6. Display of artwork and teaching materials on wires or cords strung across corridors from wall to wall shall not form a continuous combustible curtain. There shall be a minimum clearance of seven feet from the floor to the lowest portion of the display.

7. Wires or cords used to suspend artwork and teaching materials from the ceiling cannot be strung from corner to corner of a room or space and cannot be strung parallel to any wall further than six inches from the wall.

Exception: Where hanging or display of decorative materials is prohibited by Section 701.2.1

CHAPTER 9
FIRE PROTECTION SYSTEMS

SECTION 901
GENERAL

Section 901.2 Construction documents is amended by adding the following after the last sentence:

Shop drawings shall be provided in accordance with Appendix O.

Section 901.6.3 Records is replaced in its entirety as follows (subordinate Section 901.6.3.1 remains):

901.6.3 Records. Records of all system installations, inspections, tests and maintenance required by this code and referenced standards shall be maintained on the premises. Records shall be completed on National Fire Protection Association forms and/or forms provided by the Denver Fire Department. The name and Denver Fire Department license number(s) of the person(s) performing the work shall be legible on all forms.

SECTION 902
DEFINITIONS

Section 902.1 Definitions is amended as follows:

902.1 Definitions. The following terms are defined in Chapter 2:

ALARM CONTROL UNIT

APPLIANCE

BATTERY BACKUP

BATTERY-POWERED

DEVICE

DUPLEX

HARDWIRED

INSTALLED

NON-DEDICATED SMOKE CONTROL SYSTEM

SINGLE-FAMILY DWELLING

SINGLE STATION [CO] ALARM

SLEEPING ROOM

SECTION 903
AUTOMATIC SPRINKLER SYSTEMS

Section 903.2.8 Group R is amended by adding the exception as follows:

Exception: Group R-X occupancies.

Section 903.2.8.5 Balconies is added as follows:

903.2.8.5 Balconies. Sprinkler protection shall be provided for all balconies and ground floor patios of dwelling units of all construction types. Sidewall sprinklers that are used to protect such areas shall be located such that their deflectors are within 1 inch (25 mm) to 6 inches (152 mm) below the structural members, at a maximum distance of 14 inches (356 mm) below the deck, or as listed by the sprinkler manufacturer.

Exception: Sprinklers are not required for noncombustible balconies where the balcony is not supplied by fuel gas and one of the following is met:

1. The roof or other overhead structure does not cover more than 50 percent of the entire balcony area.
2. The balcony has openings on two or more sides. The area of such openings must be at least 20 percent of the total perimeter wall area of the balcony. The aggregate length of the openings shall constitute a minimum of 40 percent of the perimeter of the balcony.

Section 903.2.8.6 Townhouses is added as follows:

903.2.8.6 Townhouses. When two or more contiguous residential dwelling units constructed as townhouses, including those permitted under the *Denver Residential Code*, are protected by a single, monitored sprinkler system, that system shall be configured so it can be isolated (with valve and tamper switch) and water flow is annunciated separately at the fire alarm control panel for each dwelling unit and each protected common area.

Section 903.2.9.1 Repair garages is amended by adding Items 5 and 6 as follows:

5. Repair garages with a spray booth and/or a mixing area greater than 16 square feet utilizing flammable finishes.

   Exception: Where a previously *approved* booth is replaced with either an *approved* packaged booth or one constructed in accordance with Section 2404.3.3 and 2404.4.

4. Repair garages using open flame or welding of any type where the garage floor area exceeds 3,000 square feet.

Section 903.2.10.3 Car stackers is added as follows:

903.2.10.2 Car Stackers. Where car stackers and car lift systems with two cars stacked vertically are installed, sprinklers shall be placed between stackers at the deck (ceiling) and shall comply with spacing and obstruction requirements of NFPA 13. Car stackers and car lift systems with more than two cars stacked vertically shall be an engineered, performance-based design approved by the *fire code official*.

Section 903.2.11 Specific building areas and hazards is replaced as follows:

903.2.11 Specific building areas and hazards. In all occupancies other than Group U, an automatic sprinkler system shall be installed for building design or hazards in the locations set forth in Sections 903.2.11.1 through 903.2.11.7.

Section 903.2.11.7 Shafts in high-rise buildings is added as follows:

903.2.11.7 Shafts in high-rise buildings. Where a reduction in shaft construction fire rating is permitted by Section 403 of the *Denver Commercial Building Code,* required sprinklers shall be located at the top of the shaft and at alternate floor levels. Sprinklers shall be provided with a dedicated riser with an isolation valve and flow and tamper switch. Activation of the flow switch shall communicate an alarm to the central station and activate vertical pressurization, but not occupant notification.

Section 903.3 Installation requirements is amended by adding the following after the last sentence:

All fire sprinkler systems and special extinguishing system designs shall be submitted in accordance with Appendix O.

Section 903.3.1.1.1 Exempt locations is amended by deleting items 3 and 4.

Section 903.3.1.2.1 Balconies and decks is replaced as follows:

903.3.1.2.1 Balconies and decks. Sprinkler protection for balconies and decks shall comply with Section 903.2.8.5.

Section 903.3.3.1 Insulation above sprinklers is added as follows:

903.3.3.1 Insulation above fire sprinklers. Flexible non-supporting insulation installed above sprinklers on the underside of floor or roof sheathing shall be secured in place with 20-gauge metal netting with a mesh size not greater than 2 inches by 2 inches.

Section 903.3.5 Water supplies is replaced as follows:

903.3.5 Water supplies. The potable water supply shall be protected against backflow in accordance with Section 912.6 and the Colorado Cross Connection Manual. Hydraulic calculations shall be based on water supply information provided by Denver Water. Water supply information provided shall be obtained within the last 12 months. Hydraulic calculations shall be based on the water data provided with static and residual pressures reduced by 10 percent of the static value or 10 psi, whichever is smaller. Where water supply data is provided by a Denver Water system model, the high static pressure shall be used to verify that the fire pump churn pressure shall be maintained below the system design pressure. Shop drawings shall indicate the initial pressures and the reduced values as used in the hydraulic calculations.

Exception: Sprinkler systems installed in accordance with Section 903.3.1.3.

Section 903.3.5.1 Domestic service is replaced as follows:

903.3.5.1 Domestic service. Use of domestic service for water supply to automatic fire sprinklers shall be prohibited.

Exceptions:

1. Water supply for new NFPA 13D system.
2. UL-300 listed fire suppression systems in buildings that are not provided with automatic sprinklers.
3. Medical gas rooms in accordance with Section 5306.

Section 903.3.5.2 Residential combination services is deleted.

Section 903.3.8 Limited area sprinkler systems and all subsections are deleted in their entirety.

Section 903.3.9 Elevator hoistways and machine rooms is added as follows:

903.3.9 Elevator hoistways and machine rooms. Sprinklers shall be provided in elevator hoistways and machine rooms only as required by this Section and NFPA 13, in buildings protected with an automatic sprinkler system in accordance with NFPA 13 or NFPA 13R. Hoistways and machine rooms/spaces shall be protected by 286-degree F sprinklers. Coverage shall be designed for Ordinary Hazard Group One. Sprinklers shall be supplied from a separate, independent branch line with a readily accessible indicating shut-off valve located outside the hoistway or machine room. Control valves shall carry identification signs.

903.3.9.1 Elevators undergoing alteration. Where an existing elevator is undergoing an alteration in accordance with *Colorado Code of Regulations,* 7CCR1101-8, fire protection and emergency operation shall be provided in accordance with this Section and Section 604 and 907.3.3. In existing buildings with either a partial or complete fire sprinkler system and the elevator hoistway and/or the elevator machine room is not protected with sprinklers, sprinklers shall be installed per NFPA 13 Section 9.3.6 Installation of automatic sprinklers shall comply with Section 903.3.9.

Section 903.3.10 Sprinkler protection for electrical rooms is added as follows:

903.3.10 Sprinkler protection for electrical rooms. In buildings required to be fully sprinklered, electrical rooms containing electrical switchboards, panel boards, distribution boards, control equipment, generators and/or transformers shall be protected with automatic sprinklers. Sprinkler protection shall be designed with high-temperature sprinklers. Only sprinkler branch lines protecting the electrical room are permitted in the room.

Exceptions:

1. The room or space is under the control of a public utility.
2. The room is dedicated to electrical distribution equipment, has equipment operating at 600 volts or more and is provided with a smoke detection system connected to a monitored fire alarm system.

Section 903.3.11 Pre-action sprinkler systems is added as follows:

903.3.11 Pre-action sprinkler systems. Pre-action systems shall be installed in accordance with NFPA 13, this section, and Section 907.6.7. Fire protection piping and initiating device, control and annunciation drawings shall be submitted together, and shall meet the requirements of Appendix O for both fire alarm and automatic sprinkler system submittals. The types of pre-action systems that are *approved* for use in accordance with NFPA 13 are: single interlock, non-interlock and double-interlock systems. Installation of double-interlock pre-action systems shall be subject to approval by the *fire code official*.

Section 903.3.12 Pressure reducing valves in high-rise buildings is added as follows:

903.3.12 Pressure reducing valves in high-rise buildings. Where pressure reducing valves are utilized in high-rise buildings, each sprinklered level shall be provided with an individual pressure reducing valve.

Exception: Multiple sprinklered levels may be supplied by a pressure reducing valve on a system riser where all the following conditions are met. (see Figure 903.3.12)

1. A method to isolate the pressure reducing valves shall be provided for maintenance & repair.
2. To provide redundancy, pressure reducing valves shall be arranged in series so that failure of any single device does not allow downstream pressure in excess of 10 psi (0.7 bar) below the minimum rated pressure of any component within that portion of the system
3. An equally sized bypass around the pressure reducing valves, with normally closed control valves, shall be installed.
4. The pressure reducing valve(s) arrangement shall be installed not more than 7 feet 6 inches (2.31 m) above the floor.
5. The pressure reducing valves shall be provided with inlet and outlet pressure gauges.
6. The pressure reducing valves shall be provided with a pressure relief valve of not less than 3/4 inch (20 mm) in accordance with the manufacturer's recommendations.

7. Means shall be provided downstream of all pressure reducing valves for flow tests at sprinkler system demand.

8. The system riser does not supply any fire hose connections.

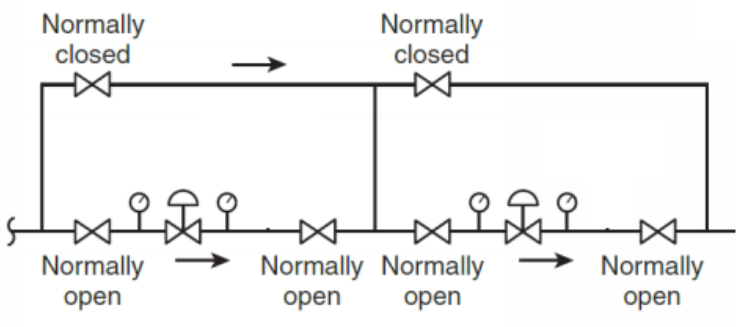

Figure 903.3.12. Example of a PRV arrangement

Section 903.4.2 Alarms is replaced as follows:

903.4.2 Alarms. *Approved* audible/visible appliances (24 VDC supervised) shall be provided for every *building* or *structure* with an *automatic sprinkler system*. These sprinkler water flow alarm devices shall be activated in accordance with Section 912.6 by main and/or zone water flow equivalent to the flow of a single sprinkler of the smallest orifice size installed in the system. Alarm appliances shall be provided on the exterior of the *building* at least 10 feet above *grade* and within 25 feet of and visible from the fire department connections and fire access road. Where a fire alarm system is installed, actuation of the *automatic sprinkler system* shall actuate the building *fire alarm system* and *approved* notification scheme.

Exception: One- and two-family dwelling units and townhouses constructed in accordance with the *Denver Residential Code.*

Section 903.4.2.1 Sprinkler monitoring panels is added as follows:

903.4.2.1 Sprinkler monitoring panels. Control panels installed for monitoring of sprinkler systems shall be located in accordance with Section 907.1.5.

Section 903.4.3 Floor control valves is replaced as follows:

903.4.3 Floor control valves. An *approved* floor control valve, check valve, drain valve, and flow switch (floor control valve assembly) for isolation, control, and annunciation shall be provided for each level, including those where sprinklers are supplied by piping on the floor below, of buildings meeting at least one of the following conditions:

1. More than two stories with a total area of all floors, including mezzanines, exceeding the NFPA 13 system protection area limitations or;

2. Required to have standpipes in accordance with Section 905.

Exception: Attic-level sprinklers supplied from the level below are not required to have a separate floor control valve assembly.

SECTION 904
ALTERNATIVE AUTOMATIC FIRE-EXTINGUISHING SYSTEMS

Section 904.3.4.1 Visible notification is added as follows:

904.3.4.1 Visible notification. Visible notification shall be provided by yellow or amber strobes. Pending discharge and discharge warning strobes shall be in conspicuous locations as *approved* by the *fire code official* and activated by the agent releasing panel. Subject to the approval of the *fire code official*, pending discharge and discharge warning may be provided by combined audible/visible appliances. No more than two flash rates shall be possible in a single field of view in accordance with NFPA 72. Where pending-discharge and discharge warning strobes are provided in addition to visible fire alarm notification appliances, the warning strobes shall be synchronized, and fire alarm visible notification appliances shall be synchronized. A warning sign shall be provided that reads, "**WARNING – Fire Extinguishing Agent Release in Progress**." Warning sign format, color and letter style shall be as *approved* by the *fire code official*. Warning signs shall be posted at each entrance door stating: "In the event of a system discharge, DO NOT enter without a self-contained breathing apparatus or until the area is thoroughly ventilated."

Section 904.3.5 Monitoring is amended by adding the following at the end of the last sentence:

"and Section 907."

Section 904.3.5.1 Releasing panel is added as follows:

904.3.5.1 Releasing panel. Pre-action and clean agent automatic fire-extinguishing systems shall be monitored and installed in accordance with this section and Section 907.6.7.

Section 904.10 Clean-agent systems is replaced as follows (subsections to remain):

904.10 Clean-agent systems. Clean-agent *automatic fire-extinguishing systems* shall be designed and installed in accordance with NFPA 2001, this section, and Section 907.6.7. Clean agent systems are supplemental and not permitted to substitute for required *automatic sprinkler systems* unless specifically approved by the *fire code official*. Shop drawings, calculations, and materials cutsheets for system installations, including initiating device, control and annunciation, shall be submitted in accordance with Appendix O and NFPA 2001. Clean-agent *automatic fire-extinguishing systems* shall be maintained, periodically inspected and tested in accordance with NFPA 2001 and their listing. Records of inspections and testing shall be maintained.

Section 904.13.1 Manual system activation is replaced and Exception 2 is added as follows:

904.13.1 Manual system operation. A manual actuation device shall be located at or near a means of egress from the cooking area not less than 10 feet (3048 mm) and not more than 20 feet (6096 mm) from the kitchen exhaust system or at an *approved* location. The manual actuation device shall be installed not more than 48 inches (1200 mm) nor less than 42 inches (1067 mm) above the floor and shall clearly identify the hazard protected. The manual actuation shall require a maximum force of 40 pounds (178 N) and a maximum movement of 14 inches (356 mm) to actuate the fire suppression system.

Exceptions:

Where placement of the manual actuation device 10 feet or more from the exhaust system would place it outside of the cooking area, the device shall be placed at an *approved* location.

Section 904.14 Domestic Cooking Systems item 4 is added as follows:

4. In Group B & R occupancies satisfying the requirements of Policy IMC Section 507.

Section 904.15 Fixed, Mobile, or Temporary Concessions Protections is added as follows:

904.15 Required Installations. Cooking equipment used in fixed, mobile, or temporary concessions, such as trucks, buses, trailers, and structures processes producing smoke or grease-laden vapors shall be equipped with an exhaust system that complies with all the equipment and performance requirements of section 606 and sections 904.15.1 through 904.15.5

Exception: Where fixed structures are governed by the *Denver Mechanical Code*, *Denver Commercial Building Code and Denver Fuel Gas Code*.

904.15.1. Cooking equipment shall be equipped with pre-engineered automatic extinguishing systems tested in accordance with UL 300 and listed and labeled for the intended application. The system shall be installed in accordance with this code, its listing and the manufacturer's instructions.

904.15.2 Manual system operation and interconnection. Manual actuation and system interconnection for the hood suppression system shall be in accordance with Sections 904.13.1 and 904.13.2, respectively.

904.15.3 Portable fire extinguishers. A portable fire extinguisher complying with Section 906.4 shall be installed within a 10-foot travel distance from cooking appliances.

904.15.4 Operations and maintenance. Automatic fire-extinguishing systems protecting commercial cooking systems shall be maintained in accordance with Sections 904.13.5.1 through 904.13.5.3.

904.15.5 Operational permits and Submittals. Pre-engineered, automatic extinguishing system shop drawings shall be submitted for permit application. Electronic submittals shall be made through the online portal. Submittals shall include the following information:

1. UL 300 listing for system.
2. Product data sheets (panel, nozzles, etc.)
3. Nozzle location shown with type of appliance.
4. Discharge density for the cooking equipment being protected.
5. Location of manual pull station from hood.

SECTION 905
STANDPIPE SYSTEMS

Section 905.1 General is replaced as follows:

905.1 General. Standpipe systems shall be provided in new buildings and structures in accordance with this section. Fire hose threads used for connection to standpipe systems shall be *approved* and shall be compatible with Denver Fire Department hose threads – 2.5-inch hose thread is national standard; 1.5-inch hose thread is a special 11.5 threads per inch. The location of Fire Department hose connections shall be *approved* by the *fire code official*. Where standpipe valve outlets are installed in stair enclosures, outlets and ancillary equipment (PRVs, drains, etc.) shall not reduce the required width of the stairway or landing.

905.1.1 Standpipe hose outlets. Each outlet shall have a cap and chain. Outlets shall be at least 36 inches and not more than 52 inches above finished floor. The valves shall have no less than 3 inches clearance around control valve and outlet cabinet shall not impede attachment of hose.

Section 905.2 Installation standard is replaced as follows:

905.2 Installation standard. Standpipe systems shall be installed in accordance with this section and NFPA 14. When water pressure at a standpipe outlet exceeds 175 psi static or residual at 250 gpm flow, a pressure-reducing valve shall be provided. The required pressure-reducing valves shall be located at the hose valve outlet only. Only field-adjustable valves shall be allowed. The valve shall have five field-adjustable valve settings (A-E) on a color-coded indication label. Pin-in hex security screws shall be installed to secure the hand wheel and a high-impact plastic shield covering the pressure-reducing adjustment mechanism shall be provided. A pin-in hex bit shall be supplied with each valve. The pressure adjustment mechanism shall be actuated using an aluminum adjustment rod provided with each valve and actuated by rotating in either a clockwise or counter-clockwise direction. Pressure gauge taps shall be provided on inlet and discharge sides of each valve. A reflective decal shall be installed on the high-impact plastic shield valve with arrows and words indicating the direction to increase or decrease pressure. If special tools are required to make field adjustments, a minimum of four such tools shall be provided at locations *approved* by the Fire Department.

Section 905.2.1 Maximum pressure is added as follows:

905.2.1 Maximum pressure. The maximum pressure at any point in the standpipe system at any time shall not exceed 350 psi

Section 905.3.1 Height is replaced as follows:

905.3.1 Height. Class I standpipe systems shall be installed throughout *buildings* where any of the following conditions exist:

1. Four or more stories are above or below *grade plane*.
2. The floor level of the highest story is located more than 30 feet (9144 mm) above the lowest level of the fire department vehicle access.
3. The floor level of the lowest story is located more than 30 feet (9144 mm) below the highest level of the fire department vehicle access

Section 905.3.4.1 Hose and cabinet is deleted.

Section 905.3.8. Landscaped roofs is replaced as follows:

905.3.8. Landscaped roofs. Buildings or structures that have landscaped roofs and that are equipped with a standpipe system shall have the standpipe system extended to the roof level on which the landscaped roof is located. The standpipe hose outlet shall be located within 230 feet of all vegetated areas and located within the access point.

Exception. In existing buildings, the *fire code official* may approve a standpipe hose outlet in an alternate location when the building provides an *approved* alternative method for firefighters or emergency responders to accomplish suppression efforts.

Section 905.4 Location of Class I standpipe hose connections is amended by replacing Items 1, 2 and 5 as follows:

1. In every required interior exit stairway, a hose connection shall be provided for each story above and below grade plane. Hose connections shall be located at an intermediate landing between stories, unless otherwise *approved* by the *fire code official*. Where exterior stairways are provided as part of the required exit stairway, hose connections shall be located at the floor landing or as otherwise *approved* by the *fire code official*.

2. On each side of the wall adjacent to the exit opening of a horizontal exit.

   Exception: Where all floor areas are reachable from an *interior exit stairway* hose connection on the same side of a horizontal exit within 200 feet for sprinklered buildings or 130 feet for nonsprinklered buildings, the hose connection on the other side of the horizontal *exit* shall not be required.

5. Where buildings have 4 or more stories above the grade plane and the roof slope is less than four units vertical to twelve units horizontal (33.3 percent) slope, there shall be at least two 2-1/2-inch roof manifold outlet connections above the roof line. Roof manifolds shall be located on the exterior perimeter of the stair enclosure within 20 feet of the roof access opening door.

Section 905.4.1 Protection is amended by adding exception 2 as follows:

Exceptions:

2. Where additional standpipes are needed to meet travel distance requirements in non-high-rise buildings, protection of piping is not required in buildings equipped with an *approved* automatic sprinkler system.

Section 905.5.3 Class II system 1-inch hose is deleted in its entirety.

Section 905.8 Dry standpipes is replaced as follows:

905.8 Dry standpipes. Dry standpipes shall not be installed.

Exceptions:

1. Where subject to freezing and in accordance with NFPA 14.
2. Class I automatic dry standpipes shall be permitted in mixed-use open parking garages where the highest floor is located not more than 75 feet above the lowest level of fire department vehicle access. The standpipe system serving the open parking garage shall be integrated with the fire protection system serving the other occupancies and shall not be a stand-alone system.
3. Class I automatic dry standpipes shall be permitted in single-use open parking garages where the highest floor is located not more than 75 feet above the lowest level of fire department vehicle access.
4. Class I manual dry standpipes shall be permitted in single-use open parking garages where the highest floor is less than 55 feet from the lowest level of fire department vehicle access. This provision is applicable to open parking garages with one level of underground enclosed parking garage.

Section 905.13 Combined systems is added as follows:

905.13 Combined systems. Working pressure and NFPA 13 pressure reducing valve requirements for combined sprinkler and standpipe systems shall include and be based on the manual standpipe system demand pressure provided at the most remote fire department connection.

SECTION 906
PORTABLE FIRE EXTINGUISHERS

Section 906.1 Where required Item 1, Exception 1 is replaced as follows:

Exception 1. In Group R-2 occupancies, portable fire extinguishers shall be required only in locations specified in Items 2 through 6 where each dwelling unit is provided with a portable fire extinguisher having a minimum rating of 2-A:10-B:C.

Section 906.1 Where required is amended by adding Item 7 as follows:

7. **Townhouses, condominiums and apartments.** Portable fire extinguishers shall be mounted on the exterior at each level stairway(s) or one (2A:10BC) within each residential unit. When mounted on the exterior, the property management/homeowner's association (HOA) shall be responsible for the care, maintenance and recharging, and use of the fire extinguisher, including inspection. The homeowner shall submit a report to the property management (HOA) on an annual basis. Portable fire extinguishers shall be located, inspected and maintained in accordance with NFPA 10.

Section 906.2.2 Verification of service collars is added as follows:

906.2.2 Verification of service collars. Every portable fire extinguisher, regardless of type, shall have a verification of service collar, in accordance with NFPA 10. Only collars obtained from the Denver Fire Department are allowed. Collars shall not be cut.

SECTION 907
FIRE ALARM AND DETECTION SYSTEMS

Section 907.1.2 Fire alarm shop drawings is replaced as follows:

907.1.2 Fire alarm shop drawings. Shop drawings for fire alarm systems shall be submitted for permit application as a deferred submittal in accordance with Section 133.4 of the *Denver Commercial Building Code*. Plan review and approval are required prior to issuance of a permit for system installation. Two sets of scaled, engineered installation shop drawings shall be submitted. Documents shall be of sufficient clarity and detail to fully describe the scope of work. Handwritten notes and comments on reproduced drawings are not acceptable. Submittals shall comply with Appendix O.

Section 907.1.3 Equipment is replaced as follows:

907.1.3 Equipment. Systems and their components shall be listed and approved for the purpose for which they are installed. Installation locations of all control panels and annunciators are subject to field approval by the Fire Department. Keys for all equipment required to be accessible to the Fire Department shall be maintained in an *approved* location in accordance with Section 506. All components shall be compatible with the system in which installed.

Section 907.1.4 Connections to other systems is added as follows:

907.1.4 Connections to other systems. A fire alarm system shall not be used for any purpose other than fire warning or as specifically *approved*, e.g. pool alarm, access control release in accordance with Section 1010 of the *Denver Commercial Building Code*, elevator recall and shunt trip in accordance with Section 907, emergency_alarms in accordance with Section 908, CO alarms in accordance with Section 915, hazardous materials alarms in accordance with Chapter 50, compressed gas alarms in accordance with Chapter 53 or mass notification systems as *approved* by the *fire code official*.

Section 907.1.5 Control units, annunciators and access keys is added as follows:

907.1.5 Control units, annunciators and access keys. All fire alarm control units and annunciators shall be UL 864 listed or equivalent. Locations shall be within 10 feet (3.048m) of the main building entrance, unless an alternate location is specifically *approved*. Equipment locations are subject to field approval prior to installation. Installation shall comply with NFPA 72. Access keys to locked fire alarm equipment shall

be maintained in an *approved* location. Fire alarm control units shall not be equipped with a key or special numeric code to access system reset and silence functions. Access to the reset and silence operator interface shall be secured behind a locked door. Field modification of control units or annunciators is not permitted. System zone and device disable functions shall not be accessible without a maintenance-level access code. Alarm signals shall be protected from unauthorized deactivation. This applies to disconnection of the panel alarm transmission to the monitoring station and the alarm output circuit(s) to notification appliances. Deactivation shall only be allowed by Fire Department personnel or authorized entities responsible for system testing and maintenance. Any system deactivation shall be reported to the monitoring station and the Fire Department. Facilities whose systems are estimated to be deactivated for 10 hours or more shall be provided with an *approved* fire watch.

Exceptions:

1. In existing buildings undergoing a panel replacement, remote annunciators with silence and reset functions may be provided when *approved* by the *fire code official*. These units shall not be equipped with "enable/disable" switches and shall be contained behind a transparent, lockable cover.

2. Low-power radio (wireless) systems shall comply with NFPA 72 and are permitted only for installations where the total system coverage does not exceed 1500 square feet. Multiple low-power systems in a building are not permitted. Installation of low-power and wired systems is not permitted in the same building.

Section 907.1.6 Central alarm station connection is added as follows:

907.1.6 Central alarm station connection. All fire alarm and sprinkler protection systems required by this code or by special agreement shall be monitored by an *approved* Class I supervising station complying with Section 918. Multiple central alarm station connections from one building are not permitted.

Alternatively, Fire Department radio boxes may be installed at locations *approved* by the Fire Department. Under no circumstances shall a DFD radio box be removed from a protected premise without written approval of the *fire code official*.

Campus arrangements or a complex of buildings requiring a graphic site map monument per Section 505.1 shall have each building's address transmitted to the central station.

With the exception of DFD radio boxes, point or contact ID transmittance is required for fire alarm control units. Central Station operators shall provide DFD Dispatch the specific point(s) that have been reported.

Section 907.1.7 Multiple fire alarm systems in a single building added as follows:

907.1.7 Multiple fire alarm systems in a single building. Only one fire alarm system shall be installed per building. Multiple points of silence and reset are prohibited on a single system.

Exceptions:

1. When permitted by the *fire code official*, portions of a building separated by fire walls without openings and identified with separate legitimate addresses are allowed to be considered separate buildings. When protected by an automatic sprinkler system, each portion of the building so considered shall be protected by a separate independent sprinkler system or a portion of a single sprinkler system dedicated to the separated portion of the building.

2. Multiple points of silence and reset as allowed by Section 907.1.9 Exception.

3. Multiple buildings constructed over a common structure where *approved* by the *fire code official*.

Section 907.1.8 Problematic systems is added as follows:

907.1.8 Problematic systems. Fire alarm systems that generate two or more false or nuisance fire alarms within 24 hours, three or more within 30 days, or ten or more within one year shall be immediately repaired, mitigated or replaced as necessary. A fine will be imposed for any false or nuisance fire alarms exceeding ten within one year. A permit shall be obtained for all work. Fire protection, fire alarm and fire detection systems shall be properly maintained to provide at least the same level of reliability, performance and protection as designed and *approved*. The property owner shall be responsible for maintaining the system. If the system is found to be impaired two or more times within a 12-month period, legal action will be imposed until the system(s) is restored to a code complying condition.

Section 907.1.9 Systems out of service is added as follows:

907.1.9 Systems out of service. Systems undergoing maintenance or modification shall not have any portion of the system out of service for more than ten hours. During maintenance or modification, all manual pull stations and notification appliances shall remain operational. Fire watch must be provided in all areas of the building where maintenance or modification will place any portion of the system out of service.

Exception: Where practical difficulties are associated with replacement of fire alarm detection systems in existing high-rise buildings, phased replacement of an existing fire alarm system shall be permitted as follows:

1. An Administrative Modification (AM) request for the phased replacement of the fire alarm and detection system shall be submitted to the *fire code official* for evaluation and approval prior to submission of shop drawings.

2. Two fire alarm control panels shall be allowed during the phased system upgrade. Existing and new fire alarm control panels shall be co-located at a location *approved* by the *fire code official*. During this period, it shall be acceptable to have two points of system reset via the two fire alarm control panels. A wall map showing each floor with descriptions of which system is controlling devices in each area shall be posted adjacent to the fire alarm control panels during construction. Upon completion of the new front-end equipment installation and after all compatible devices have been transferred, tested and *approved* by the *fire code official*, the contractor will remove the old panel and related equipment.

3. Installation within each floor shall be completed prior to commencement of work on any other floor unless the contractor can complete multiple floors simultaneously.

4. Project duration shall not exceed 24 months from the date the fire alarm permit is issued, nor shall the total duration, including project planning, design and installation, exceed 36 months. Subject to the approval of the *fire code official*, a single extension of up to a maximum of one year may be requested in writing. Extensions shall be granted only in cases of unforeseen difficulties. Building owners and contractors shall make every effort to minimize any delay to project completion.

5. The applicant shall present a planned schedule with phased replacement of the system and components, including scope of work and sequence of operation with coordination of the two fire alarm panels, to the *fire code official* for review and approval prior to preparation of shop drawings.

6. Fire alarm and detection system protection shall be maintained at all times and in all areas, except where system/component replacement is taking place while installers are present. Existing and new devices and appliances not affected and outside of the installation area shall be maintained fully operational at all times.

7. Phasing of fire alarm system replacement shall be in an organized, coherent and logical sequence to reduce system disruption and allow work while maintaining the life safety systems of the building.

8. Audible and visual notification appliance coverage shall comply with NFPA 72 and this Code.

9. Either point graphic annunciation or LED directory-type annunciation shall be provided. Where LED directory-type annunciation is provided, each device type per level in conjunction with progressive remote indicating lights for detectored spaces shall be provided. Where multiple smoke control zones are provided within each level, each compartment shall be separately annunciated. For existing buildings with graphic annunciation, either the graphic annunciation shall be maintained or replaced with a new graphic annunciation panel. Annunciator panels shall include LED lights for automatic detection, manual pull, flow, tamper, special systems, supervisory and trouble.

10. Where the building has a smoke control system, detailed interface of the new fire alarm system with the existing or upgraded smoke control system shall be provided in the AM submission with details also shown on the shop drawings.

11. The building owner or owner's representative and the design professional shall sign the AM request.

12. The AM shall cite the practical difficulties of the proposed system replacement, the phased scope of replacement, the duration of each phase, as well as the total time from start to completion of the project. Failure to complete the project within the specified time frame shall subject the parties responsible to any allowed penalties.

Section 907.2.1.3 Illumination of means of egress is added as follows:

907.2.1.3 Illumination of means of egress. Where the means of egress illumination is reduced at walking surfaces in auditoriums, theaters, concert or opera halls, and similar occupancies in accordance with Section 1008.2.1 of the *Denver Commercial Building Code,* the required illumination shall be automatically restored upon activation of a premises' fire alarm system.

Section 907.2.1.4 Smoke control is added as follows:

907.2.1.4 Smoke control. Where required by Section 1030.6.2 of the *Denver Commercial Building Code* for assembly areas with smoke-protected seating. Smoke detection shall be provided as required for smoke control operation in accordance with Section 909.17. The smoke control system shall be activated automatically by an alarm initiated from a smoke detector, heat detector or dedicated sprinkler water flow alarm within the smoke zone. No detector zone shall exceed 22,500 square feet. (2090.31 m2) or serve more than one smoke control zone. Where ceiling heights are 30 feet (9144 mm) or greater, air sampling-type smoke detection systems or *approved* beam detection shall be provided in lieu of ceiling spot smoke detection.

Section 907.2.3 Group E is amended as follows:

907.2.3 Group E. Group E occupancies shall be provided with an *approved* manual fire alarm and automatic detection system throughout the occupancy. Emergency voice/alarm communication system shall be provided in accordance with Section 907.5.2.2.

Exceptions 1 and 2 to remain.

Section 907.2.3 Group E Exception 3 is replaced as follows:

3. Manual fire alarm boxes and automatic detection are not required throughout Group E occupancies that are protected with automatic sprinklers throughout, where all the following conditions are met:

   3.1 Interior corridors are protected by smoke detectors.

   3.2 Manual fire alarm boxes are provided in the auditorium, cafeteria, gymnasium and staff locations.

Section 907.2.3 Group E Exception 4 is deleted.

Section 907.2.3.1 is added as follows:

907.2.3.1 Existing E occupancies. Where an existing Group E occupancy building undergoes an addition or alteration, an emergency voice/alarm communication system shall be provided throughout the new and existing Group E occupancy in accordance with Section 907.5.2.2.

Exceptions:

1. Where the Group E area increase is less than 20 percent and locations of smoke detectors comply with the existing building coverage.

2. Where the building alteration or addition does not increase the aggregate occupant load of the Group E occupancy to 100 or more.

Section 907.2.6 Group I is amended by adding the following after the last sentence:

An emergency voice/alarm communication system in accordance with Section 907.5.2.2 shall be installed where partial evacuation is provided.

Exceptions 3 and 4 are added as follows:

3. A pre-signal system may be installed if *approved* by the *fire code official*. Twenty-four-hour personnel supervision is required at *approved* locations. Chimes may be installed in lieu of audible notification appliances as *approved* by the *fire code official*. Denver Fire Department approval is required for pre-signal application or alarm verification.

4. Automatic fire detectors are not required in sprinklered areas less than 24 square feet (2.23 m2.).

Section 907.2.6.2 Group I-2 is replaced as follows:

907.2.6.2 Group 1-2. An automatic smoke detection system shall be installed in corridors in Group I-2 Condition 1 facilities and spaces permitted to be open to the corridors by Section 407.2 of the *Denver Commercial Building Code*. Corridors and areas open to corridors in Group I-2 occupancies shall be provided with automatic smoke detection. Additionally, Group I-2 occupancies shall be provided with smoke detection as required in Section 407.2 of the *Denver Commercial Building Code* where not in conflict with this section.

Exceptions 1 and 2 to remain.

Sections 907.2.6.3.4 Zoning and annunciation and 907.2.6.3.5 Monitoring are added as follows:

907.2.6.3.4 Zoning and annunciation. Alarm, supervisory and trouble signals shall be displayed at the annunciation panel and be transmitted to the central alarm station. Alarm signals shall indicate the type of alarm and the zone of origin, in accordance with NFPA 72. Separate zones shall be provided for individual fire protection systems, buildings, building levels, cell complexes and sections of floors constructed as smoke compartments.

907.2.6.3.5 Monitoring. The fire alarm system shall be monitored by an *approved* central alarm station service or by transmission of a local alarm which will give audible and visible signals at an *approved* constantly attended location.

Section 907.2.6.4 Group I-4 day care facilities is added as follows:

907.2.6.4 Group I-4 day care facilities. Day care occupancies shall be provided with an *approved* manual fire alarm and automatic detection system throughout the occupancy. Occupant notification shall be provided in accordance with Section 907.5. Conversion of existing buildings to small day care centers in accordance with 308.5 of the *Denver Commercial Building Code* shall comply with this section.

Exceptions:

1. If less than 50 occupants, the system is not required to be monitored by a central alarm station.
2. Where the occupant load is 20 or fewer-manual fire alarm systems and automatic smoke detection systems are not required where 120v AC smoke alarms with battery back-up, wired to an un-switched source are provided.
3. Manual fire alarm boxes are not required throughout the building where all the following apply:
   a. Interior corridors are protected by smoke detectors.
   b. System central alarm station monitoring is provided.
   c. Manual boxes are provided in locations supervised by staff in accordance with Item 4 below.
4. Where an *approved* automatic sprinkler system is installed throughout a Group I-4 day care occupancy, manual pull stations shall only be required in locations supervised by staff, (e.g. teachers' or nurses' lounge, custodial office, boiler room, administrative areas, auditorium and cafeteria). Notification appliances that activate on sprinkler waterflow and/or activation of a pull station shall be provided throughout.

Section 907.2.11 Single- and multiple station-station smoke alarms is replaced as follows:

907.2.11 Single- and multiple station-station smoke alarms. Listed single- and multiple station-station smoke alarms complying with UL 217 shall be installed in accordance with Sections 907.2.11.1 through 907.2.11.6, and NFPA 72, Chapter 29. As approved by the fire code official, smoke alarms may be connected to a fire alarm system for supervision only. Smoke alarms within dwelling and sleeping units shall be inspected and tested in accordance with NFPA 72, Chapter 14 and the manufacturer's instructions. A hard-copy log of all inspections, testing, maintenance and battery changes shall be kept at the property. This log shall include the dates of inspection, testing, maintenance and battery change and the person performing such. Upon request, a copy of the log shall be provided to the *fire code official*. If this information is not current or available, an inspection shall be made to inspect and test all devices, or the property owner or agent of the property owner shall be directed to retain a firm licensed by the Denver Fire Department to inspect and test all devices and submit a report of the inspection findings to the *fire code official*.

Exception: Residential occupancies regulated by the *Denver Residential Code* shall comply with the applicable provisions of that code.

Section 907.2.13 High-rise buildings is replaced as follows:

907.2.13 High-rise buildings. High-rise buildings shall be provided with a fire command center in accordance with Section 508, manual fire alarm boxes located in accordance with Section 907.4.2 and automatic fire alarm and detection system in accordance with Section 907.2.13.1, a fire department communication system in accordance with Section 907.2.13.2, and an emergency voice/alarm communication system in accordance with Section 907.5.2.2 that provides occupant notification of alarm on the fire floor, floor above, floor below and at the level of the FCC.

Exceptions 1-6 to remain.

Section 907.2.13.1.1 Area smoke detection is amended by adding items 3, 4, 5 and 6 as follows:

3. In all interior corridors serving as a means of egress for Group R-1, R-2 and R-4 occupancies, with an occupant load of 10 or more.

4. Not less than one foot but no more than three feet on the occupied side of each door that enters a refuge area, elevator lobby and exit stairway which does not directly exit from a refuge area, for occupancies other than R-1, R-2 and R-4.

5. At the top of stairwells and in elevator hoistways (automatic fire detectors in accordance with Section 907.3.3). These devices shall initiate an alarm condition and illuminate the respective indicator at the graphic annunciator. They shall not initiate occupant notification or the smoke control sequence.

6. Where unenclosed vertical openings are permitted by Section 712 of the *Denver Commercial Building Code*, smoke detectors shall be located around the perimeter of the opening, on each level, not less than four feet from the edge of the opening. Unenclosed stairway and escalator openings shall comply with this Section and 712.1.3 of the *Denver Commercial Building Code*. Two-story openings in other than I-2 and I-3 occupancies shall comply with Section 712.1.9 of the *Denver Commercial Building Code*. See Section 907.2.14 for atriums.

Section 907.2.13.2 Fire department communication system is replaced as follows:

907.2.13.2 Fire department communication system. Two-way telephone communication services shall be connected to a UL 864 listed fire alarm system. Design of the fire department communications system shall consist of both of the following:

1. Hardwired components, in accordance with Section 907.2.13.2.1, consisting of permanent handsets, amplifiers and cable system for selective and "all-call" operation. Components shall be listed under UL product category code designation UOXX.

2. Radio communications using the emergency responder radio communications enhancement System (RES) in accordance with Section 510, designed and installed for full coverage in accordance with Section 510.2.1

Section 907.2.13.2.1 Hardwired systems is added as follows:

907.2.13.2.1 Hardwired systems. A two-way, Fire Department communication system shall be provided for Fire Department use, each phone on the two-way Fire Department communication system shall have a separate control switch on the fire alarm control unit which distinctly identifies the location of the phone in use. The vertical riser and distribution wiring shall be installed in accordance with the *Electrical Code of the City and County of Denver* and shall comply with the pathway survivability requirements of NFPA 72, 24.3.14.

Section 907.2.13.2.1.1 Handsets is added as follows:

907.2.13.2.1.1 Handsets. Permanently mounted telephone handsets shall be provided. Each permanently mounted handset shall initiate a signal from the handset to the FCC. Permanently mounted telephone handsets shall be provided in the locations listed below:

1. Each mechanical room with fans used for smoke control
2. Emergency and standby power rooms
3. Each fire pump room
4. Each elevator equipment room

Section 907.2.13.4 Alarm notification is added as follows:

907.2.13.4 Alarm notification. Alarm notification in high-rise buildings shall comply with Section 907.5, and notify occupants on the floor in alarm, the floor above, the floor below and at the level of the fire command center. Silence function shall be provided to independently silence notification appliances at the level of the FCC. This function shall be accomplished by an *approved* switch located in the FCC.

Section 907.2.13.5 Smoke control system activation and its subsections are added as follows:

907.2.13.5 Smoke control system activation. Smoke control systems shall be automatically activated by alarm-initiating devices including return riser duct detectors, water flow switches, manual pull stations, and manual operation from the fire command center (FCC), in accordance with Sections 907.2.13.5.1 and 907.2.13.5.2. After the initial alarm activation, any subsequent automatic alarm activation on another floor shall initiate the floor exhaust sequence in accordance with Section 907.2.13.5.2.

Exception: Main sprinkler system water flow, heat or smoke detectors located in stair or hoistway enclosures, kitchen hood suppression activation and sprinkler system water flow in building service chutes or shafts.

907.2.13.5.1 Activation of pressurization. Activation of stair and elevator hoistway enclosure pressurization shall be initiated by activation of any alarm-initiating device in accordance with Section 907.2.13.5 above.

Exception: On vegetated roofs, activation of rooftop manual pull stations shall not activate building vertical pressurization systems.

907.2.13.5.2 Smoke control exhaust. Exhaust in a smoke control zone shall be automatically activated by any automatic fire alarm or sprinkler initiating device within the respective smoke control zone. Unless otherwise *approved* by the *fire code official*, each floor of a high-rise building shall be considered a separate smoke control zone.

Exceptions: Kitchen hood suppression system activation~~.~~

Section 907.2.13.6 Annunciation is added as follows:

907.2.13.6 Annunciation. Graphic annunciation in accordance with Section 907.6.4.1.2 or computer graphic annunciation in accordance with Section 907.6.4.1.3 shall be provided.

Section 907.2.13.7 Elevator status/control panel and its subsection are added as follows:

907.2.13.7 Elevator status/control panel. An elevator status/control panel shall be provided. The elevator status/control panel shall comply with DFD policy 907.2.13.7 and:

1. Identify each elevator cab alphanumerically and the floors it serves. Identify corresponding cab number in elevator cab.
2. Indicate elevator(s) that are operating on emergency power. Visual indicators in accordance with ASME A17.1 are required.
3. Have a placard at elevator status/control panel stating how many elevators can operate under emergency power simultaneously.
4. Indicate elevator car position.
5. Indicate whether the elevators are operational.
6. Indicate direction of travel.
7. Have key switches as required for selective activation of cars if all are not capable of simultaneous operation on secondary power.
8. Phase I Fire Service Recall Key switches in accordance with ASME A17.1.
9. Two-way communication system from the elevator to the FCC shall be incorporated on the elevator status panel. Two-way communication systems shall meet ASME A17.1.
10. Indicate whether the hoistway doors are open or closed.
11. Visual signal (flashing firefighter hat) for each elevator that has a corresponding in-car visual signal (flashing firefighter hat).

No other elevator functions shall be installed on these panels without approval from the *fire code official*.

Section 907.2.13.7.1 Fire service elevator status panels is added as follows:

907.2.13.7.1 Fire service elevator status panels. Status of designated fire service elevators shall be displayed on an *approved* standard emergency services interface in accordance with Section 920.9. These indications shall be combined with the requirements of Section 907.2.13.7.

Section 907.2.13.8 Emergency generator status panel is added as follows:

907.2.13.8 Emergency generator status panel. An emergency generator status panel shall be provided. The emergency generator panel shall show:

1. Operating status (on-off) and malfunction indication as required by NFPA 110
2. Indication of transfer switch position (normal-emergency)
3. Indication that generator is in automatic mode
4. Main fuel oil storage tank low fuel level alarm.

Section 907.2.13.9 Fire pump status panel is added as follows:

907.2.13.9 Fire pump status panel. A fire pump status panel shall be provided. The fire pump panel shall have:

1. Remote operating status indication as required by NFPA 20.
2. Motor/engine running/on or off. Pump running indication shall be transmitted to the fire alarm control panel as a supervisory signal and distinctly annunciated.
3. Low fuel level alarm for fire pump fuel tank.

Section 907.2.14 Atriums connecting more than two stories is replaced as follows:

907.2.14 Atriums connecting more than two stories. A smoke detection and smoke exhaust system shall be provided in atriums that connect more than two stories. The smoke exhaust system shall be designed in accordance with Section 909.14.

907.2.14.1 Activation. Activation of two smoke detectors in the atrium shall initiate the atrium exhaust sequence. In high-rise buildings, activation of a smoke detector located in areas separated from the atrium by a smoke barrier shall operate in accordance with Section 907.2.13.4.

907.2.14.2 Detection. Detection shall be as follows:

1. Area type smoke detectors, spaced in accordance with NFPA 72, shall be installed at the atrium ceiling where the ceiling is 30 feet (9.144 m) or less from the floor of the atrium. If the ceiling is greater than 30 feet (9.144 m) from the atrium floor, beam type detectors shall be installed. A detection system with alarm verification may be installed. The initial device in alarm shall initiate a supervisory condition at the fire alarm panel.
2. On the underside of projections into the atrium, spaced in accordance with NFPA 72.
3. Around the perimeter of the atrium opening on all floors open to the atrium. The detectors shall be spaced not more than 30 feet (9.144 m) on center and shall be located within 15 feet (4.572 m) of the atrium opening.
4. In high-rise buildings, where any part of the floor is open to an atrium, smoke detectors shall be located throughout the floor not included in the atrium area for every 2500 square feet (232.258 square meters) of occupied floor space. No smoke detector shall serve more than one smoke zone.
5. All smoke detectors shall be accessible for maintenance and testing.

Sections 907.2.20 Smoke detection in covered malls is added as follows:

907.2.20 Smoke detection in covered malls. Where covered malls require a smoke control system in accordance with Section 402.7.2 of the *International Building Code*, smoke detection shall be provided in accordance with Section 907.2.143.1.2.

Section 907.2.24 Airport buildings and structures is added as follows:

907.2.24 Airport buildings and structures. See NFPA 415, as amended in accordance with Appendix S of the *Denver Commercial Building Code*.

Section 907.3.1 Duct smoke detectors is amended by replacing Exception 1 as follows:

1. Spot-type smoke detectors may be used for return air system connection to vertical risers serving two or more stories in accordance with NFPA 72. Detectors shall be listed for the maximum anticipated airflow velocity. Detectors concealed above the ceiling shall be provided with a remote indicating light mounted on the ceiling directly below the device. Remote indicating lights shall be installed in an accessible, visible area directly below or adjacent to the detector in accordance with Section 907.4.3.2.

Section 907.3.3 Elevator emergency operation is replaced as follows:

907.3.3 Elevator emergency operation. Automatic fire detectors installed for elevator emergency operation shall be installed in accordance with this section, ASME A17.1, and NFPA 72**.** Fixed temperature 190-to-200-degree F heat detection and smoke detectors shall be provided for shunt trip and recall operation, respectively, where those functions are required. Fixed-temperature, 135-degree F heat detection shall be installed at the top of elevator hoistways for recall operation where shunt trip is not required and

where elevator machinery is installed in a non-sprinklered hoistway. Smoke detectors shall be installed in all machine rooms, control rooms and machine and control spaces. Where environmental or other conditions prohibit installation of smoke detectors for recall, fixed-temperature, 135-degree F heat detectors shall be permitted to substitute for the required recall smoke detectors. Detectors shall be connected to the building fire alarm system, where provided.

Exceptions:

1. For existing buildings undergoing an elevator alteration, replacement or new installation, an administrative modification shall be submitted for approval where an existing complying fire alarm control unit cannot be expanded within its listing to accommodate required devices for recall and shunt trip, identifying the alternative means and methods that will be provided.
2. For existing buildings undergoing an elevator alteration, replacement, or new installation, and not equipped with a required fire alarm system, a dedicated "elevator recall control and supervisory control unit" shall be provided. This panel shall be located in accordance with Section 907.1.5. Building plans shall be permanently mounted adjacent to the panel in accordance with Section 907.6.4.1.1.1
3. Where linear heat detection is installed, 155-degree F detection shall be permitted for recall operation.

Sections 907.3.3.1 In buildings without a fire alarm system is added as follows:

907.3.3.1 In buildings without a fire alarm system, system smoke detectors and a dedicated fire alarm system control unit shall be provided that is designated as an "elevator recall control and supervisory panel." The system shall be designed and installed in accordance with NFPA 72 and ASME A17.1.

Section 907.3.3.2 Shunt trip is added as follows:

907.3.3.2 Shunt trip. Where sprinklers are provided in elevator shafts and machine rooms, machinery spaces, or control rooms or spaces, elevator power shunt trip shall be activated prior to sprinkler operation in accordance with NFPA 72. Shunt trip is not required for sprinklers installed within 2 feet (610 mm) of the floor of the elevator pit.

Section 907.3.3.3 Shunt trip circuit breakers is added as follows:

907.3.3.3 Shunt trip circuit breakers. Shunt trip circuit breakers shall be located in either the main power distribution room or installed in the elevator machinery room/space in a NEMA 3R enclosure.

Section 907.3.3.4 System smoke detectors shall be located in elevator lobbies, sprinklered hoistways and machine/control rooms/spaces is added as follows:

907.3.3.4 System smoke detectors shall be located in elevator lobbies, sprinklered hoistways and machine/control rooms/spaces. Activation of these smoke detectors shall return to level of exit discharge, nonstop, all elevators serving that, lobby or with control equipment in the affected machine/control room/space except for the smoke detector in the elevator lobby at level of exit discharge which shall return the elevators to an alternate level. Elevators without a landing at level of exit discharge shall be returned to the landing that is closest to level of exit discharge or other *approved* level. The alternate level shall be *approved* by the *fire code official*. Elevators shall remain at the level where they returned, with doors open, until being manually overridden by the operator key switch required by ASME A17.1 or the elevator control panel in the FCC. Use of detector relay bases for recall activation is specifically prohibited.

Exception: Upon recall, elevators in pressurized hoistways shall return to the designated or alternate level. Doors shall remain open for 60 seconds and then close.

Section 907.3.3.5 Elevator firefighter indicator is added as follows:

907.3.3.5 Elevator firefighter indicator. Section 2.27.3.2.6 of ASME A17.1/CSA B44 is deleted as a reference. Operation of the elevator visual signal (flashing firefighter hat) shall comply with Section 907.3.3.5.1 or 907.3.3.5.2.

Section 907.3.3.5.1 New elevators is added as follows:

907.3.3.5.1 New elevators. When elevator recall is initiated by detection devices located in the elevator lobby, the visual signal (flashing firefighter hat) shall illuminate steady. Independent of the initiating device, when a detection device located in the elevator hoistway, machine room or other elevator control space activates, the visual signal (flashing firefighter hat) shall illuminate intermittently (flashing).

Section 907.3.3.5.2 Alterations to existing elevators and subsections are added as follows:

907.3.3.5.2 Alterations to existing elevators. Where an existing elevator is modified under any alteration encompassing a scope of work described under 7CCR 1101-8, the elevator visual signal (flashing firefighter hat) shall function in accordance with Section 907.3.3.5.1. This requirement applies when any alterations are made to the firefighter's emergency operation. In cars not equipped with an elevator visual signal, signage shall be provided in accordance with Section 604.3.1. Protection of elevator lobbies, hoistway and machine room shall be provided per Section 907.3.3.5.2.1 or 907.3.3.5.2.2.

907.3.3.5.2.1 Hydraulic elevator. Detection shall be provided as follows:

1. Smoke detectors shall be installed at all elevator lobbies and in the machine room(s) to provide recall.
2. Where sprinklers are installed in the hoistway, a fixed-temperature, 190-to-200-degree F heat detection shall be installed within 2 feet (610 mm), and at the same elevation, of each sprinkler. Activation of such heat detection, or of a smoke detector in the machine room, shall cause the elevator visual signal, where provided, to flash and shall initiate the required recall prior to operation of the sprinkler.
3. Where an existing hoistway is equipped with a vent, the smoke detector at the top of the hoistway shall be maintained for vent operation. Activation of this smoke detector shall also initiate recall and cause the elevator visual signal, where provided, to flash.

907.3.3.5.2.1 Traction elevators. Detection shall be provided as follows:

1. Smoke detectors shall be installed at all elevator lobbies and in the machine room(s) to provide recall.
2. For elevators provided with an elevator visual signal, fixed-temperature, 135-degree F heat detection shall be installed at the top of the hoistway to provide recall and cause the elevator visual signal in the car to flash.

   Exception: Where linear heat detection is installed, 155-degree F detection shall be permitted for recall operation.
3. Where an existing hoistway is equipped with a vent, the smoke detector at the top of the hoistway shall be maintained for vent operation. Activation of this smoke detector shall also initiate recall and cause the elevator visual signal, where provided, to flash.

Section 907.4.3.2 Remote indicating lights is added as follows:

907.4.3.2 Remote indicating lights. A remote indicating light shall be installed for detector(s) within each room with an entry door. The indicating light shall be located on the wall or ceiling above the door and within 12 inches (30.48 cm), on the exit corridor side. This shall include each door leading through adjoining or intervening rooms from an exit corridor to that room (progressive type). Remote indicating lights shall be installed on the ceiling directly below detectors located above ceilings. Remote indicating lights shall latch "on" and remain lit (steady or flashing at a minimum rate of one flash per second) until the fire alarm system is reset.

Exception: Remote indicating lights may be deleted where a point-lit or computer graphic annunciator is provided.

Section 907.5 Occupant notification systems is amended by adding an exception as follows:

In high rise buildings, occupant notification shall not activate upon operation of detectors at the top of stairwells or in elevator hoistways or main or service chute water flow devices.

Section 907.5.2 Alarm notification appliances is replaced as follows:

907.5.2 Alarm notification appliances. Audible and visible alarm notification shall be provided to alert occupants of the area having a fire alarm system as well as in the means of egress serving the occupancy. The fire alarm control panel shall incorporate an alarm silencing switch that shall only de-activate the audible notification appliances until the system is manually reset. Alarms shall be provided in accordance with Sections 907.5.2.1, 907.5.2.2 and 907.5.2.3, and as required by other sections of this code. Notification appliances shall be listed for the purpose.

Exception: The silencing switch is not permitted in healthcare facilities regulated by the Colorado Division of Fire Prevention & Control (DFPC) on behalf of the Center for Medicaid Services (CMS).

Section 907.5.2.1 Audible alarms is amended by adding the following after the last sentence:

In theaters, nightclubs, dance halls, ballrooms and similar areas, means shall be provided to reduce or eliminate background noise upon activation of the fire alarm system. Fire alarm audible notification shall comply with Sections 907.5.2.1.1 through 907.5.2.1.3

Section 907.5.2.2.3 Alternate uses is replaced as follows:

907.5.2.2.3 Alternate uses. The emergency voice/alarm communication system may be used for other emergency communication announcements with the approval of the *fire code official*.

Section 907.5.2.2.6 Low frequency alarm signal is added as follows:

907.5.2.2.6 Low frequency alarm signal. A minimum of two cycles of an alert tone complying with NFPA 72, 18.4.6.3 shall precede and follow required voice evacuation messages.

Section 907.5.2.2.7 Background noise reduction is added as follows:

907.5.2.2.7 Background noise reduction. In theaters, nightclubs, dance halls, ballrooms and similar areas, means shall be provided to reduce or eliminate background noise upon activation of the emergency voice/alarm communication system.

Section 907.5.2.2.8 Communication system location is added as follows:

907.5.2.2.8 Communication system location. All buildings provided with an emergency voice/alarm communications system shall have the communication systems and other life safety equipment located in a fire command room constructed in accordance with Section 508.2.

Section 907.5.2.3.2 Groups I-1 and R-1 is replaced as follows:

907.5.2.3.2 Visible notification appliances in Groups R-1 and I-1 occupancies. Group R-1 and I-1 sleeping and dwelling units shall be provided with visible notification activated by an integral in-room smoke alarm required by Section 907.2.11. Visible notification appliances shall also be provided which are activated by the building fire alarm and/or automatic sprinkler system. The minimum number of sleeping units per building to be provided with visible notification appliances shall be in accordance with Table 907.5.2.3.2. All accessible units required by Table 1108.6.1.1 of the *International Building Code*. shall be provided with visible notification appliances as part of this requirement.

Section 907.5.2.3.3.1 Wired equipment is deleted.

Section 907.5.2.3.4 Visible notification appliances in R-3 and R-4 occupancies is added as follows:

907.5.2.3.4 Visible notification appliances in R-3 and R-4 occupancies. Sleeping rooms shall be provided with visible notification activated by an integral in-room smoke alarm. Visible notification appliances shall also be provided which shall be activated by the building fire alarm and/or sprinkler system, where provided.

Exception: Buildings that do not contain more than two dwelling units.

Section 907.6 Installation and monitoring is replaced as follows:

907.6 Installation and monitoring. A fire alarm system shall be installed and monitored in accordance with this section and NFPA 72.

Section 907.6.1 Wiring is replaced as follows:

907.6.1 Wiring. Fire alarm system and communications wiring shall comply with provisions of NFPA 72 and NFPA 70 (NEC) Article 760. Wiring color code shall be consistent throughout the entire system and permanently posted inside the fire alarm control panel. Separate colors shall be used for each type of initiating circuit, indicating circuit and control circuit. Color coding shall be by continuous colored insulation or by application of six-inch (15.24 cm) long colored heat-shrink tubing at the end of each conductor at all splices, taps and terminations. Wiring shall not be painted. Wireless protection systems utilizing radio-frequency transmitting devices shall comply with the special requirements for supervision of low-power wireless systems in NFPA 72.

Section 907.6.1.1 Survivability is added as follows:

907.6.1.1 Survivability. Where occupant relocation or partial evacuation is part of the building life-safety plan, fire alarm system communication and other required emergency communication systems survivability shall be provided in accordance with NFPA 72 and this Section. Audible and visible notification appliance circuits, and firefighter two-way communications, shall be designed and installed such that attack by fire within an evacuation zone shall not impair control and operation of the system outside the evacuation signaling zone.

Exceptions:

1. Two-way communication systems at elevator landings or elevator lobby areas of rescue assistance as required by Section 1009.8 of the *Denver Commercial Building Code*.
2. Notification appliance circuits shall not be routed through stairway enclosures except for the required appliances located in the stairway enclosure.

Section 907.6.1.1.1 System Design is added as follows:

907.6.1.1.1 System design. Where survivability is required in buildings with 2-hour *fire-resistance rated* floors, the systems wiring shall be designed to meet Pathway Survivability Level 3 in accordance with NFPA 72. Where survivability is required in *buildings* with 1-hour *fire-resistance rated* floors, pathway survivability shall comply with NFPA 72.

Exception: Stacked closets dedicated for fire alarm and other approved emergency equipment that are separated from the remainder of the *building* by two-hour *fire-resistance rated* fire barriers are permitted as a "protected area" for application of NFPA 72, 12.4.

Section 907.6.1.2 Communication systems in existing buildings is added as follows:

907.6.1.2 Communication systems in existing buildings. Where occupant partial evacuation/relocation notification is provided and the existing communication systems comply with one of the performance design alternatives below, those systems shall be permitted to remain. The systems shall be maintained in accordance with the original design. Retrofit of existing systems are permitted to comply with the provisions of this section.

1. Separate "A" and "B" risers with alternating floor speakers, designed such that no more than one-half of the speakers on a floor shall be affected by loss of any one amplifier, pre-amplifier or cable within the floor or communication zone.

2. Class A wiring configuration for risers and floor distribution provided system survivability is maintained in the event of a failure of any distributed or banked amplifier to limit the failure to no more than one-half of the notification appliances on the floor plate in the notification zone. Internally backed-up amplifier modules are acceptable.

3. Class A wiring configuration for risers and class B floor distribution wiring with alternating speakers such that system survivability is maintained in the event of a failure of any distributed or banked amplifier to limit the failure to no more than one-half of the notification appliances on the floor plate in the notification zone. Internally backed-up amplifier modules are acceptable.

Section 907.6.1.3 Monitoring integrity is added as follows:

907.6.1.3 Monitoring Integrity. Conductors and connections that interconnect equipment, devices and appliances shall be monitored for integrity, in accordance with NFPA 72, Chapter 12. Power supplies and in-building fire emergency voice/alarm communication systems shall be monitored for integrity in accordance with NFPA 72, Chapter 10.

Section 907.6.4 Zones is replaced as follows:

907.6.4 Zones. All *fire alarm systems* shall be divided into alarm zones. Each floor shall be zoned separately, nad a zone shall not exceed 22,500 square feet (2,090 square meters). The length of any zone shall not exceed 300 feet (91.4 m) in any direction. When two or more alarm zones are provided, visible zone indication shall be provided at an *approved* location. Zones shall comply with this section unless otherwise *approved* by the *fire code official*. Trouble and supervisory signals shall be indicated in accordance with this section and NFPA 72. Annunciator panels shall comply with Section 907.6.4.1. Annunciation zones shall comply with the following:

Each building level shall be annunciated separately as follows:

1. All manual devices.

2. All automatic devices.

3. Each fire sprinkler water flow zone.

Separate visible indication shall be provided for:

1. Main fire sprinkler flow. Individual risers in accordance with Section 903.
2. Each special extinguishing system
3. Each non-required system
4. Each special detection system
5. Each stairway (where detection is provided)
6. Each emergency alarm system in accordance with Sections 908 and 915 and Chapters 50 and 53.
7. Each elevator hoistway and machine room (separate zone indication for smoke and heat detectors as provided)
8. System trouble
9. Sprinkler control valves (supervisory only). Maximum 20 devices per zone
10. Duct detectors (Except for duct detectors required for activation of smoke control systems' activation as required by Section 907.2.13.5 which shall be supervisory alarms). Maximum 20 devices per zone
11. Fire pump running supervisory indication
12. Elevator shunt trip power supervisory indication
13. Radio enhancement system power supervisory indication
14. Area of rescue assistance two-way communication supervisory indication
15. Radio enhancement system malfunction supervisory indication
16. Radio communicator trouble

Section 907.6.4.1 Zoning indicator panel and subsections are replaced as follows:

907.6.4.1 Annunciator panels. Annunciator panels shall be point-lit graphic or computer graphic or a directory LED point display type as *approved* by the *fire code official*. Upon initiation of an alarm, supervisory or trouble condition the panel shall record the status. Alarms shall "lock-in" until the fire alarm system is reset with a dedicated reset switch located at the main fire alarm control panel. Annunciation lights shall be red for "Alarm" and yellow for "Trouble" and "Supervisory" signals. Each signal type shall be distinctly identified.

Exception: Where a monitored building fire alarm control unit is not provided, annunciator panels are not required for a dedicated function elevator recall control and supervisory control unit or sprinkler waterflow and supervisory control unit.

907.6.4.1.1 Directory annunciator. A directory annunciator shall be provided as required. Location shall be field *approved*. The annunciator shall be provided with individual alarm indications in accordance with Section 907.6.4 for each zone. Indicators shall be of sufficient size and intensity to be visible in normal lighting.

907.6.4.1.1.1 Building plans. Scaled floor plans shall be permanently mounted adjacent to directory type annunciator panels. Plans shall be of durable construction, easily readable in normal lighting, protected by a smooth, transparent, plastic surface and shall include every building level including mezzanines and roofs. Plan content shall comply with Appendix O.

907.6.4.1.2 Point-lit graphic annunciator. A graphic annunciator shall be provided as required in Sections 907.6.4.1.2.1 through 907.6.4.1.2.3.

907.6.4.1.2.1 When required. A point-lit graphic annunciator is required for the following: underground buildings, high-rise buildings, buildings with a smoke control system in accordance with Section 909 and where required for a pre-action fire sprinkler or clean agent extinguishing system in accordance with Section 907.6.7.

907.6.4.1.2.2 Location in building. Location of annunciators shall be field *approved*. Locations depicted on reviewed drawings are not permitted until field verification is secured.

907.6.4.1.2.3 Graphics. The annunciator shall consist of building plans in accordance with Appendix O, with the addition of discrete LED indications for each alarm and supervisory initiating device. The annunciator shall be provided with a momentary push-button "Lamp Test." Separate indications for "Trouble" and "Supervisory" conditions shall be provided.

907.6.4.1.3 Computer graphic display. Computer graphic displays shall be permitted for individual system designs. Systems shall be fully compliant with UL 864. Systems shall contain a full color primary and secondary display. Demonstration of the specific equipment to be installed with the actual operating software for the proposed system shall be presented to the *fire code official*. Operator interface to the graphic shall be based on:

1. Ease of use. Primary operator interface shall be standard 2-button mouse driven. Optional secondary interfaces may be provided.
2. Adequacy of display for operational purposes. Displays shall be capable of presenting the entire floor plate with all devices and device status shown on an initial alarm screen. On any alarm indication, the floor plate in alarm shall come up on the screen with all devices shown and the device in alarm highlighted. Display segmentation from this initial view shall be possible for expanding the view of the area of alarm incidence. Displays shall be contrasting black lines and lettering on a white background.
3. Flexibility of system for upgrade.
4. Minimal proprietary components. Accepts standard picture file types.
5. Plain English report generation of events, histories, maintenance schedules, device status and settings and user access.
6. UL-864 listed event-driven primary display. Secondary display(s) as *approved* by the *fire code official*. All displays shall be specified for 24-hour, 7-day continuous operation. A 3-year warranty is recommended.
7. Secure access.
8. Fire alarm device icons shall be in accordance with NFPA 70 or graphic icons as *approved* by the *fire code official*.

Building plans in accordance with Section 907.6.4.1.1.1 shall be provided and shall be located as *approved* by the *fire code official*.

Section 907.6.7 Pre-action and clean agent extinguishing systems and subsections are added as follows:

907.6.7 Pre-action and clean agent extinguishing systems. Pre-action and clean agent extinguishing systems shall have a dedicated releasing panel and annunciator connected to the building fire alarm system where provided.

907.6.7.1 Annunciation. Pre-action and clean agent systems shall be provided with a local directory annunciator zoned for manual, smoke detector, flow alarm and tamper supervisory indications in accordance with Section 907.6.4.1.1. Systems with under floor and/or above ceiling detection devices shall be provided with a point-lit graphic annunciator in accordance with Section 907.6.4.1.2. Systems shall annunciate alarm and supervisory conditions at the main building fire alarm panel.

907.6.7.2 Control panels for pre-action systems. Control panels shall be listed for releasing service. Control panel and annunciator shall be located outside the protected area in a location *approved* by the *fire code official*. Areas protected by a single releasing panel shall be contiguous.

907.6.7.3 Cross-zoned detection. Cross-zoned detection systems shall transmit a building alarm on activation of the first initiating device. Double-interlock pre-action systems shall not have cross-zoned detection.

907.6.7.4 Pre-action system submittals. Fire protection piping and initiating device, control and annunciation drawings, calculations, and material cutsheets shall be submitted in accordance with Appendix O for both *fire alarm system* and *automatic sprinkler system* submittals, per 903.3.11.

907.6.7.5 Clean-agent automatic fire-extinguishing system submittals. Fire protection piping and initiating device, control and annunciation drawings, calculations, and material cutsheets shall be submitted in accordance with Appendix O and NFPA 2001, per Section 904.10

Section 907.11 Non-required full or partial systems is added as follows

907.11 Non-required full or partial systems. Fire alarm systems and fire detection systems not required in this code or by special agreement are not required to be connected to a central station. Where non-required fire alarm and/or fire detection systems are connected to a central station, the central station shall be an *approved* Class I central station. Multiple central station connections from one building are not permitted unless *approved* by the *fire code official*. Installation of non-required full or partial fire alarm or fire detection systems shall comply with NFPA 72, Chapter 23. Zone annunciation shall be provided in accordance with Section 907.6.4. Annunciator and control panels for non-required or partial systems shall be of an *approved* type and have permanent signage indicating "Non-required System" or "Partial System." Partial and non-required systems shall be maintained operational. System removal shall be permitted only with the approval of the *fire code official*.

Exception: New and existing dwellings regulated by the *Denver Residential Code.*

Section 907.11.1 General system design and installation requirements is added as follows:

907.11.1 General system design and installation requirements. Shop drawings must be submitted for approval. Documents shall be stamped and signed by a professional engineer licensed by the State of Colorado and shall comply with Section 907.1.2. Non-required systems installed in a building with a required fire alarm system shall have the non-required system connected to the required fire alarm control panel. Each non-required system shall annunciate as a separate zone at the required fire alarm control panel. Multiple fire alarm control panels are not allowed where a required system is installed.

Section 907.11.2 Design criteria is added as follows:

907.11.2 Design criteria. Design of non-required fire alarm systems shall comply with the following:

1. A minimum of one audible/visible alarm appliances per floor in an *approved* location.
2. One initiating device zone per floor.
3. Existing duct detectors are not required to be connected to a non-required system.

4. Secondary power is required for the FACP in accordance with NFPA 72.
5. Multiple non-required, non-monitored systems in a building are not required to be interconnected.

SECTION 908
EMERGENCY ALARM SYSTEMS

Section 908.3 Fire alarm system interface is replaced as follows:

908.3 Emergency Fuel Shut Off (EFSO) for Aircraft Fueling. Emergency alarms for notification of an emergency condition involving aircraft fueling shall be provided as required in Section 2006.6.

Section 908.4 Emergency alarm systems is added as follows:

908.4 Emergency alarm systems. Manual emergency alarm systems shall be designed in accordance with this section and the manual fire alarm requirements of NFPA 72. Manual emergency alarm-initiating devices shall be yellow or amber, comply with the mounting requirements of Section 907.4.2 and be installed outside of each interior exit and exit access door, and inside of each exterior exit and exit discharge directly serving the potentially contaminated area(s) identified in Sections 908.1 through 908.3 unless otherwise *approved* by the *fire code official*.

Emergency alarm systems shall be monitored by the building fire or sprinkler alarm control panel unless otherwise *approved* by the *fire code official*. An emergency alarm system shall be annunciated as a separate zone on the building annunciator and transmitted to the central station as a separate/distinct signal and be relayed to DFD Dispatch as such. Where the fire or sprinkler alarm control panel is not monitored by a supervising station, annunciation shall be provided in an *approved* location. Floor plans of the area protected by an emergency alarm system shall be provided as part of the building graphic maps.

Audible and visible emergency alarm notification appliances shall be installed on the interior and exterior of the areas identified in Sections 908.1 through 908.3 per the notification requirements of NFPA 72. Audible and visible notification appliances along with clearly legible signage shall be installed inside and outside of these occupancies in *approved* locations to alert all occupants possibly inside or entering the potentially contaminated area.

Audible emergency alarm notification shall have tone and pattern distinctly different from fire alarm notification. Visible notification appliances shall be amber strobes or beacons. Subject to the approval of the *fire code official*, complete notification in accordance with NFPA 72 throughout a building or facility beyond the potentially contaminated area is not required provided the potential for migration of the hazard to other occupied areas is small. Signage shall be placed adjacent to the amber strobes/horns. The sign shall have a minimum 2-inch block lettering with a minimum one-half-inch stroke unless otherwise *approved* by the *fire code official*. The sign shall be on a contrasting surface of black on yellow and shall be of durable construction. Language shall be as *approved* by the *fire code official*.

Section 908.4.1 Emergency alarm systems shop drawings is added as follows:

908.4.1 Emergency alarm systems shop drawings. Shop drawings for emergency alarm systems shall be submitted for permit application as a deferred submittal in accordance with Section 133.4 of Section 1 of the *Denver Building Code*. Plan review and approval are required prior to issuance of a permit for system installation. Handwritten notes and comments on reproduced drawings are not acceptable. Submittals shall comply with Appendix O.

Section 909 Smoke Control Systems is replaced in its entirety as follows:

SECTION 909
SMOKE CONTROL SYSTEMS

909.1 Scope and purpose. This section applies to mechanical smoke control systems when they are required by other provisions of this code. The purpose of this section is to establish minimum requirements for the design, installation and acceptance testing of smoke control systems that are intended to provide a tenable environment for the evacuation or relocation of occupants. Smoke control systems regulated by this section serve a different purpose than the smoke- and heat-venting provisions found in Section 910. Mechanical smoke control systems shall not be considered exhaust systems under Chapter 5 of the *Denver Mechanical Code*.

Exceptions:

1. This provision does not preclude application of the performance-based design calculations.
2. Stairway and hoistway pressurization system designs in high rise buildings where the uppermost occupiable floor is more than 250 feet above the lowest level of fire department vehicle access, and all healthcare occupancy groups, shall be performed by an engineering analysis.

909.2 General design requirements. Buildings, structures or parts thereof required by this code to have a smoke control system or systems shall have such systems designed in accordance with the applicable requirements of Section 909 and the generally accepted and well-established principles of engineering relevant to the design. The construction documents shall include sufficient information and detail to adequately describe the elements of the design necessary for the proper implementation of the smoke control systems. These documents shall be accompanied by sufficient information and analysis to demonstrate compliance with these provisions.

909.3 Smoke control systems. As required by other sections of this code, smoke control system(s) shall be provided for high-rise buildings, atriums, covered malls, underground buildings, assembly occupancies with smoke-protected seating, stages and areas in accordance with Section 410 of the *Denver Commercial Building Code*, airport buildings in accordance with Appendix S of the *Denver Commercial Building Code*, and assembly occupancies with an aggregate of 1,000 or more occupants in high-rise buildings. This requirement shall be applicable to the Occupancy Groups as follows: A; B; E; M; R-1; R-2, and I-1 and I-3.

909.3.1 Unenclosed vertical openings. Where unenclosed vertical openings are provided as permitted by Section 712 of the *Denver Commercial Building Code*, buildings with a smoke control system shall have the floor openings between smoke zones protected by draft curtains and closely spaced sprinklers installed in accordance with NFPA 13 smoke detectors located at the floor side of the opening.

909.4 Construction document submittals. Construction documents for smoke control systems shall be submitted for permit application with the construction drawings for the project in accordance with Section 133.of the *International Building Code*, including the seal and signature of the design professional responsible for the coordination of the smoke control design package

909.5 Shop drawing submittals (deferred submittal). The deferred submittal shall be consistent with the *approved* construction document submittal and reviewed by the engineer of record prior to submission to the Denver Fire Department in accordance with Appendix O.

909.6 Smoke barrier construction. Smoke barriers shall comply with Section 709 of the *Denver Commercial Building Code*.

909.7 Power systems. The smoke control system shall be supplied with two sources of power. Primary power shall be from the normal building power system. Secondary power shall be from an *approved* emergency or standby source complying with NFPA 70 (NEC). The secondary power source and its transfer switches shall be in a separate room from the normal power transformers and switchgear and shall be enclosed in a room constructed of not less than 1-hour fire barriers ventilated directly to and from the exterior. Power distribution to the automatic transfer switch from the two sources shall be by independent routes. Transfer to secondary power shall be automatic and in compliance with NFPA 70 (NEC).

909.7.1 Power sources and power surges. Elements of the smoke control system relying on volatile memories or the like shall be supplied with uninterruptible power sources of sufficient duration to span a 15-minute primary power interruption. Elements of the smoke control system susceptible to power surges shall be suitably protected by conditioners, suppressors or other *approved* means.

909.7.2 Wiring. In addition to meeting requirements of NFPA 70 (NEC), all wiring, regardless of voltage, shall be fully enclosed within continuous raceways in mechanical rooms, electrical rooms, elevator equipment rooms and vertical risers. Wiring shall not be painted. The detection and control system wiring shall be clearly marked at all junctions, accesses and terminations.

909.8 Firefighter's smoke control panel. A firefighter's smoke control panel meeting the requirements of UL 864 and listed for smoke control under UL product category guide designation UUKL shall be provided and shall include manual control or override of automatic control for mechanical smoke control systems. Upon an alarm, the fire alarm system shall take direct control of all smoke control system components such as fans, dampers, activation of dedicated pressure control systems and status indication. The fire alarm system shall provide a signal to any temperature control or building automation systems for HVAC system enable/disable control and status. Where HVAC systems are utilized for smoke control the fire alarm system shall take direct control of those HVAC system components utilized for smoke control. Hard-wired interlock is acceptable. The fire alarm system shall provide automatic and manual override control and status. Terminal air distribution units may remain under their own normal building automation control. The panel shall be located in a fire command center complying with Section 509 in high rise buildings or buildings with smoke-protected assembly seating. In all other buildings, the firefighter's smoke control panel shall be installed in an *approved* location adjacent to the fire alarm control panel. The firefighter's smoke control panel shall comply with Appendix O.

909.8.1 Smoke control systems. The firefighter's control panel shall be provided for manual or override of automatic control of mechanical smoke control systems. This panel shall graphically depict the individual smoke control system fan and damper controls, their relative location within the building, stairwells, hoistways, building pressurization and exhaust airflow, refuge area pressurization and all other smoke control zones that apply. This panel shall clearly show the building arrangement and smoke control zones served by the systems. The graphic panel shall be oriented to the building and include a North reference compass point. A combination of vertical (section) and/or horizontal (plan) graphic arrangement may be necessary. The operating control and status indicators on the FSCP shall have a maximum height from the floor of 6 feet, 6 inches and a minimum of 2 feet, 0 inches, and may require more than one section to accommodate height limitations. Layout, labeling and location of the fire fighters control panel shall be reviewed and *approved* by the Fire Department prior to fabrication.

909.8.2. Verification. Control systems for mechanical smoke control systems shall include provisions for verification. Verification shall include positive confirmation of actuation, testing, manual override, and the presence of power downstream of all disconnects. A preprogrammed weekly test sequence shall report abnormal conditions audibly, visually, and by printed report. The preprogrammed weekly test shall operate all devices, equipment, and components used for smoke control. Monitoring for fault status for pressurization and smoke removal fans shall include the following:

1. Loss of power to the fan or VFD/motor starter.

2. Open electrical disconnect at pressurization and smoke removal fan, whether the *fire alarm system* is in alarm or not.

3. Fan fails to move air by program or switch on FSCP.

4. VFD/motor start failure.

909.9 System response time. Smoke control system activation shall be initiated immediately after receipt of an appropriate automatic or manual activation command. Smoke control systems shall activate individual components (such as dampers and fans) in the sequence necessary to prevent physical damage to the fans, dampers, ducts and other equipment. The total response time for individual smoke control systems to achieve their desired operating mode shall not exceed the following time periods:

Fan operating at desired state – 75 seconds

Damper position travel – 60 seconds

909.10 Testing of smoke control systems. Before the Fire Department accepts the smoke control systems and prior to initial occupancy, the smoke control systems shall be tested in their presence to confirm that the systems operate in compliance with this Section. In addition, all smoke control systems shall be tested annually and shall be maintained to perform its intended purpose under the code version with which it was built.

909.10.1 Acceptance testing. The requirements of acceptance testing defined hereinafter shall be the minimum requirements. All acceptance tests shall be witnessed by a Fire Department representative.

1. Furnish a testing procedure, reviewed by the smoke control system design professional engineer, to the Fire Department 72 hours in advance of the acceptance tests being performed. The procedure shall define how compliance with the code will be demonstrated. The procedure shall also identify what instrumentation including artificial smoke generating equipment, will be used during the testing.

2. Smoke control systems testing shall include the following subsystems to the extent that they affect the operation of the smoke-control system:

   a. Fire alarm system (See NFPA 72)

   b. Building automation and temperature control system

   c. HVAC equipment

   d. Electrical equipment

   e. Power sources including emergency or standby power

   f. Automatic suppression systems

   g. Automatic operating doors and closers

   h. Dedicated and non-dedicated smoke-control systems

   i. Emergency elevator operation

3. Prior to witnessed acceptance testing of the smoke control systems, the design professional engineer shall confirm and advise the Fire Department in writing that the entire smoke control system has been installed, air balanced and tested in accordance with its design, plans, specifications and this code.

4. The following shall be notified so that they may witness the acceptance testing:

   a. Design professional Engineer-of-Record

b. Building contractor

c. Owner's representative

d. Denver Fire Department

e. Denver Building Department

5. Unless otherwise *approved* by the Fire Department, sufficient smoke shall be generated to produce at least the volume of the smoke zone being tested within approximately five minutes. All smoke-generating devices shall be supplied by the owner or his representative and *approved* by the *fire code official*.

6. Acceptance testing shall demonstrate that the correct outputs are produced for a given input for each control sequence specified. The following control sequences shall demonstrate complete smoke-control sequence.

   a. Normal mode

   b. Automatic smoke-control mode for first alarm

   c. Manual override of normal and automatic smoke-control modes

   d. Return to normal

7. After the smoke control system is activated, smoke shall not continue to migrate to other smoke zones of the building.

8. Smoke control systems shall demonstrate the ability to inhibit smoke from migrating across smoke zone boundaries to other areas and containment within the active smoke zone. Smoke control systems shall also demonstrate the continual reduction of smoke concentration from within the active smoke zone by demonstrating exhaust rates of at least 40 percent during incident (sealed floor except one stairway door in open position) and at least 80 percent of the design rate in post fire conditions for salvage and overhaul operations. These system capabilities shall be measured and verified with anemometers or similar measurement tools during acceptance testing at the exhaust intake locations.

   909.10.1.1 Testing requirements. Tests shall be performed in full automatic mode with the building operating under both normal power and emergency power. Test equipment shall include manometer (calibrated within last 12 months), spring scale and other equipment as necessary to adequately measure and record system performance. Communications shall be provided between the test locations and the fire command center.

   1. For a building that is not a high rise, multiple tests on more than one floor or smoke zone shall be required to demonstrate proper operation.

   2. For high rise buildings, tests shall be conducted at a minimum of three locations.

      a. A floor in the lower third, a floor in the middle third and a floor in the upper third of the building.

      b. With a floor in alarm, an additional automatic alarm shall be initiated on a floor immediately above or below the initial floor in alarm. All floors in alarm shall go to exhaust mode

      c. With a floor in alarm, a manual pull station on another floor shall be activated. Smoke control operation shall not be affected.

d. For atriums, more than one test may be required depending upon the atrium configuration, its relationship to adjacent spaces and if the atrium is located in a high-rise.

e. Activation of one smoke detector in each smoke control zone on each floor being tested.

f. Activation of at least one sprinkler flow switch.

g. Activation of at least one manual pull station.

3. For high rise buildings, pressure differentials shall be measured across stairway doors, across elevator/lobby/refuge corridor area doors and adjoining spaces, between atriums and areas immediately adjacent to atriums where atriums are part of a high-rise building. Door opening force into stair enclosures or refuge areas shall not exceed 30 pounds under any conditions.

4. Upon activation of the fire alarm system for each test, confirm that the smoke control system fans and dampers have assumed the correct operating condition for the type of alarm initiating device and the location of the initiating device. This shall be confirmed also at the smoke control panel in the fire command center.

5. Manually override the operation of a sampling of fans and dampers during each test, taking care not to damage system components. Return all override switches to their "auto" position after each test.

6. Make-up air provisions may include:

   a. Stairway doors on the fire floor may be opened and used as a source of make-up air during smoke exhaust system testing.

   b. Variable frequency drives for smoke exhaust system fans may be controlled in response to duct static pressure settings.

   c. Dedicated make-up air systems.

   d. Other methods as documented in the design submittals and *approved* by the *fire code official*.

909.10.3 Annual tests. Annual tests shall be performed in accordance with Sections 909.10.3.1 and 909.10.3.2, on all smoke control systems including those installed prior to adoption of this code. It is recognized that smoke control systems installed prior to adoption of this code could have parameters that are different than those described in this section. In those cases, smoke control tests shall be adjusted accordingly to meet the intent of this section.

Denver Fire Department representatives shall have the authority to witness any regularly scheduled annual testing of smoke control systems.

909.10.3.1 Equipment operating tests. The following equipment operating tests shall be conducted annually on the smoke control system components:

1. Verify the proper control and status indication of smoke control dampers (i.e., "OPEN/CLOSED") and fans (i.e., "ON/OFF") by visual observation at each damper and fan location and at the smoke control status/control panel in the fire command center.

2. Verify that all smoke control dampers and fans assume the correct operating position under both normal and fire modes and when the manual override switches at the smoke control status/control panel are placed in the "auto" position.

3. Verify that the manual override switches function properly for smoke control dampers and fans.

4. Items l, 2 and 3 above may be performed by qualified service technicians who are familiar with the proper operation of the smoke control systems and equipment. The engineer responsible for conducting the smoke control system performance tests shall develop the test procedures to be used and review the results obtained by the service technicians, including an actual sampling to confirm the accuracy of the test. A statement summarizing this review shall be included in the performance test report described in Section 909.10.4 that is required to be submitted by the engineer to the Fire Department.

5. A copy of the written test procedure and an accurate log of tests shall be maintained in the fire command center and at either the building management office or the maintenance office. A copy of the previous test report shall be submitted to the engineer responsible for the smoke control performance tests for the engineer's review and approval prior to the smoke control test. Any defects, system modifications and repairs shall be recorded in the log. Necessary corrections shall be made prior to the smoke control performance test.

909.10.3.2 Performance tests. Within 30 days after completion of annual equipment operating tests defined above, conduct the following smoke control system performance tests. The annual smoke control systems tests shall be conducted under the direct supervision of a professional engineer qualified in the testing of such smoke control systems.

1. Activate the smoke control systems automatically through the fire alarm system for tests used to confirm proper sequencing of the system components. Measure actual relative pressure differentials between areas in alarm and adjacent areas and actual door opening forces.

2. For high rise buildings, conduct smoke control tests, observations and measurements of all aspects of the smoke control system at a minimum of 15 percent of the smoke-controlled floors with a minimum of 3 floors, evenly spaced throughout the vertical sections of the building. Smoke control tests in subsequent years shall be conducted on previously untested floors, as may be practical so that all floors ultimately are tested.

3. For all other buildings, conduct smoke control tests, observations and measurements of all aspects of the smoke control system at a minimum number of locations to demonstrate proper performance as *approved* by the Fire Department. Each test shall attempt to involve as many different fan systems as practical. Smoke control tests in subsequent years shall be conducted on previously untested locations, as may be practical so that all locations ultimately are tested over a three-year period.

4. Tests of the smoke control system shall be conducted by activation of at least one smoke detector in each smoke control zone on each floor being tested. One test of at least one of the smoke control zones shall include activation of one sprinkler flow switch. In addition, the smoke control tests shall include activation of at least one manual fire alarm box. For high rise buildings, pressure differentials shall be measured across stairway doors, between floors in alarm and floors immediately above and below floors in alarm, across elevator/lobby/refuge corridor area doors and adjoining spaces in Group R-1, R-2 or I-1 occupancies, and between atriums and areas immediately adjacent to atriums where atriums are part of high rise buildings.

5. Upon activation of the fire alarm system for each test, confirm that the smoke control system fans and dampers have assumed the correct operating condition for the type of alarm initiating device and the location of the initiating device. This shall be confirmed also at the smoke control panel in the fire command center.

6. Manually override the operation of a sampling of fans and dampers during each test, taking care not to damage system components. Return all override switches to their “auto” position after each test.

909.10.4 Test reports. Within 30 days of completing any smoke control test, submit a test report to the Fire Department. A copy of the previous and current test reports shall be kept in the fire command center. The test report shall be written by the professional engineer who conducted the testing. The test report shall bear the seal and signature of the professional engineer. Any defects, modifications and repairs shall be recorded in a log kept in the fire command center and at either the building management office or the maintenance office. The test report shall include, but is not limited to the following:

1. Provide a brief description of the smoke control system installed in the building being tested and state the year the building received its construction permit for the smoke control system. Provide a sequence of operation for the smoke control system.
2. Describe in general terms the equipment operating test procedures. Include a list of the equipment operating and smoke control test deficiencies along with a schedule of the proposed corrective action.
3. Describe detailed procedures followed during the equipment operating tests. Describe detailed procedures followed during the smoke control tests.
4. List test equipment used and outside air temperature and wind conditions at the time the smoke control tests were conducted.
5. State sequences and timing of the system operations during all smoke control tests (e.g., smoke detector activation time, fan start times, time for dampers to assume the correct position, etc.).
6. List the location of test measurements and the measured values for pressure differentials and door-opening forces for each test location.
7. Record any operational defects and performance deficiencies with respect to the requirements of this section, and state recommendations for corrective action. Include a schedule to re-test each deficiency. Submit results of any subsequent tests performed after completion of the corrective action.
8. Engineer's assessment indicating that the smoke control system, as installed and tested, conforms to the requirements of Section 909.

909.10.5 Functional test requirements for smoke control system equipment. Testing of smoke control equipment shall be performed in accordance with this section to determine that the installed systems continue to operate in accordance with the *approved* design. Operational testing of the smoke control system shall include all equipment such as fans, dampers, controls, and doors. Testing shall include positive confirmation of actuation. System equipment and components shall be exercised for sufficient time to provide positive confirmation of proper operation or fault condition.

909.10.5.1 Written record. Results of the tests shall be documented in the building's life safety systems testing and maintenance log and printed reports generated during the automated testing. Testing documents must be maintained on-site in the fire command center or in a location *approved* by the *fire code official*.

909.10.5.2 Dedicated systems.

909.10.5.2.1 Dedicated systems shall be tested semiannually.

909.10.5.2.2 The smoke-control system shall be operationally tested as prescribed in Section 909.10.5. Dedicated smoke control systems shall be operated for each control sequence.

909.10.5.2.3 Operation of the correct outputs for each given input shall be verified and recorded.

909.10.5.3 Non-dedicated systems.

909.10.5.3.1 Non-dedicated systems shall be tested annually.

909.10.5.3.2 The smoke-control system shall be operationally tested as prescribed in Section 909.10.5. Nondedicated smoke control systems shall be operated on a representative sample of each type of equipment sufficient to verify proper operation for each control sequence. For high rise buildings, tests shall be conducted at a minimum of 15 percent of the smoke-controlled floors with a minimum of 3 floors, evenly spaced throughout the vertical sections of the building. Tests in subsequent years shall be conducted on previously untested floors, as may be practical so that all floors ultimately are tested. For all other buildings, tests shall be conducted at a minimum number of locations to demonstrate proper performance as *approved* by the Fire Department. Tests in subsequent years shall be conducted on previously untested locations, as may be practical, so that all locations ultimately are tested over a three-year period. Operation of the correct outputs for each given input shall be verified and recorded.

909.10.6 System repairs and maintenance. All deficiencies noted in the annual report shall be corrected within 30 days and, if required by the engineer, the smoke control system shall be re-tested. All smoke control systems will be maintained to perform its intended purpose under the code version with which it was built. With approval of the Denver Building Department and the Denver Fire Department smoke control systems may be remodeled to comply with current code.

909.11 System acceptance. Buildings, or portions thereof, required by this code to comply with this section shall not be issued a certificate of occupancy until the provisions of this section have been fully complied with and the fire department has received satisfactory instruction on the operation, both automatic and manual, of the system.

Exception: In buildings of phased construction, a temporary certificate of occupancy shall be allowed provided that those portions of the building to be occupied meet the requirements of this section and that the remainder does not pose a significant hazard to the safety of the proposed occupants or adjacent buildings.

909.12 Smokeproof enclosures. For buildings required to comply with Sections 403 or 405 of the *Denver Commercial Building Code*, a smokeproof enclosure shall consist of an enclosed, pressurized stairway or ramp conforming to Section 909.15.1 and 1023.11 of the *Denver Commercial Building Code* and this Section.

909.12.1 Ventilation systems. Smokeproof enclosure ventilation systems shall be independent of other building ventilation systems. The equipment and ductwork shall comply with one of the following:

1. Equipment and ductwork shall be located exterior to the building and directly connected to the smoke proof enclosure or connected to the smoke proof enclosure by ductwork enclosed by two-hour fire barriers.

2. Equipment and ductwork shall be located within the smoke proof enclosure with intake or exhaust directly from and to the outside or through ductwork enclosed by two-hour fire barriers.

3. Equipment and ductwork shall be located within the building if separated from the remainder of the building, including other mechanical equipment, by two-hour fire barriers.

909.13 Design criteria. All smoke control systems shall comply with the requirements of Sections 909.13.1 through 909.13.10. All equipment shall have local operating controls disabled when in smoke control mode. Equipment internal faults shall not cause shutdown of the smoke control equipment unless *approved* in writing by the *fire code official*. Equipment including, but not limited to, fans, current transducers (CT's), differential pressure transmitters, sail switches, ducts, duct protecting materials, automatic dampers, balance dampers, actuators, linkage, limit switches and motor controllers shall be suitable for their intended use. Equipment

functions and operating characteristics shall not detract from the smoke control systems' stable and reliable performance. Upon smoke control activation, VFD's shall operate in override or life safety mode where faceplate commands and non-smoke control commands are ignored. In addition, non-critical faults (safeties) shall be ignored to ensure the continued and stable performance of the smoke control fan.

909.13.1 Minimum pressure differential. The minimum pressure differential across stairway and hoistway smokeproof enclosures on fire floors, shall be +0.05-inch water gauge (0.0124 kPa) with pressurization fans turned on and fire floor in exhaust mode. Where elevator lobbies are provided, the pressure differential shall be measured between the pressurized lobby and fire floor with pressurization fans turned on and fire floor in exhaust mode. Minimum operating performance of pressurization fans shall not be less than 12 Hz for VFD's or the motor control's minimum manufacturer published rating.

909.13.2 Maximum door opening force. The maximum pressure difference across a smoke barrier or smoke zone and an opening into a stair enclosure shall be determined by the required door-opening forces. Door opening force shall not exceed 30 pounds applied horizontally at the latch side of the door on the door-opening device under any operating condition. Maximum door opening force shall not exceed 15 pounds at stairway entry doors during a non-fire mode of operation. Opening force at elevator lobby doors shall comply with *Denver Commercial Building Code* and be measured on the fire floor with the hoistway pressurization fans turned on and fire floor in exhaust mode.

909.13.3 Resistance to smoke recirculation. Locate outdoor air intakes for pressurization systems remote from points of discharge for smoke exhaust systems in order to minimize the potential for recirculation of smoke to the outdoor air intakes. The minimum separation distance shall be 10 feet in any direction.

909.13.4 Determination of the volume of a space. The volume of a given building element shall be defined as the space that is contained between the finished floor slab(s) of one level and the underside of the floor or roof element above, and the walls or partitions that form the boundaries of the space.

909.13.5 Fire/Smoke damper temperature rating. The temperature rating for the thermal element in fire and combination fire/smoke dampers, where they are applied in smoke exhaust systems, shall be no less than 250 degree ° F. For systems where the probable temperature rise to which the damper will be exposed may be higher than 250 degree ° F the temperature shall be computed by an *approved* method.

909.13.6 Fans. In addition to other requirements, belt-driven fans shall have 1.5 times the number of belts required for the design duty, with the minimum number of belts being two. Fans shall be selected for stable performance based on normal temperature and, where applicable, elevated temperature. Calculations and manufacturer's fan curves shall be part of the documentation procedures. Fans shall be supported in accordance with Chapter 16 of the *Denver Commercial Building Code*. Motors driving fans shall not be operated beyond their nameplate horsepower (kilowatts), as determined from measurement of actual current draw, and shall have a minimum service factor of 1.15.

909.13.7 Motor controllers and variable frequency drives (VFDs). Motor controllers and variable frequency drives (VFDs) provided to operate fans of smoke exhaust and pressurization systems shall be installed in secure, conditioned and protected locations. These devices shall be located in a room or space separated from the remainder of the building by a 1-hour fire-resistance rated fire barrier. Power wiring and control wiring between switchgear and /or panels, motor controllers, VFDs and smoke control system motors and control dampers shall be in non-flexible metallic raceway up to the component connection. VFDs for smoke control system fans shall not be equipped with a manual or automatic bypass switch except where fans are designed and set for 60 hertz, nominal.

Exception: The final connection to the component shall be made with the appropriate flexible conduit in accordance with NFPA 70 (NEC).

909.13.8 Ducts. Duct materials and joints shall be capable of withstanding the probable temperatures and pressures to which they are exposed during smoke control operating conditions. Ducts shall be constructed and supported in accordance with the *Denver Mechanical Code*. Ducts shall be leak tested to 1.5 times the maximum design pressure in accordance with nationally accepted practices. Measured leakage shall not exceed 5 percent of design flow. Results of such testing shall be a part of the documentation procedure. Ducts shall be supported directly from fire-resistance-rated structural elements of the building by substantial, noncombustible supports.

Exception: Flexible connections (for the purpose of vibration isolation) complying with the *Denver Mechanical Code*, that are constructed of *approved* fire-resistance-rated materials.

909.13.9 Equipment, inlets and outlets. Equipment shall be located so as to not expose uninvolved portions of the building to an additional fire hazard. Outside air inlets shall be located so as to minimize the potential for introducing smoke or flame into the building. Exhaust outlets shall be so located as to minimize reintroduction of smoke into the building and to limit exposure of the building or adjacent buildings to an additional fire hazard.

909.13.9.1 Vegetated roofs. Stairway and hoistway pressurization system intakes shall be separated by a minimum of 15 feet from vegetated areas.

909.13.10 Automatic dampers. Automatic dampers, regardless of the purpose for which they are installed within the smoke control system, shall be listed and conform to the requirements of *approved*, recognized standards.

909.14. Smoke control systems for atriums (where required by Section 404 of the Denver Commercial Building Code).

909.14.1 Requirements. The operation of the smoke control systems shall be controlled through the fire alarm system and shall comply with the requirements of this Section. The atrium volume shall include all spaces not separated from the atrium by the provisions of Section 404.6 of the *Denver Commercial Building Code*.

909.14.2 Operation. Where required by Section 907.2.14**,** activation of initiating devices shall cause the following sequence to occur:

1. Open atrium exhaust dampers.
2. Open supply dampers to atrium.
3. Close exhaust dampers on all adjacent smoke zones.
4. Start exhaust fans.

909.14.3 Atrium exhaust. The system shall exhaust a minimum of six air changes per hour. A minimum of 50 percent of the volume of supply air shall be sized and introduced via gravity supply or fan powered inlets within 10 feet of the lowest level of the atrium. The total volume of supply air shall be 75 percent of the required volume of exhaust air. A maximum velocity of 200 feet per minute shall be maintained across the net free area of the supply air openings.

909.14.4 Exhaust openings. Atrium exhaust openings shall be located in the ceiling or in a smoke trap area immediately adjacent to the ceiling at the top of the atrium. The lowest level of the exhaust openings shall be above the top of the highest elevation of door openings into the atrium.

909.15 Smoke control systems for high-rise buildings.

909.15.1 Stairway pressurization systems.

909.15.1.1 Requirements. Where the uppermost landing of an exit enclosure serves an occupiable floor located more than 75 feet above the lowest level of fire department vehicle access road, the stairway enclosure and associated exit passageway shall be mechanically pressurized with outdoor air, via one or more separate, dedicated pressurization systems. The operation of each stairway pressurization system shall be controlled through the fire alarm system. Fire, smoke, or fire/smoke dampers are prohibited in stairway pressurization systems. Isolation dampers are permitted in the outdoor air intake ductwork, where such dampers are provided with a hard-wired interlock with the drive or starter, that proves "damper open" position, and that the damper is configured to "fail" open from a control standpoint. Each stairway pressurization system shall be enclosed in an *approved* two-hour fire-resistive rated fire barrier and/or horizontal assembly from the outdoor air intake to the stairway enclosure penetration. Ductwork shall not be required within the stairway enclosure.

Exception: Where ductwork is not provided for stairway pressurization, stairway shaft leakage shall not exceed 10 percent of actual supply, exclusive of the door leakage.

909.15.1.2 Operation. Each fan discharge shall be provided with a duct smoke detector that shall annunciate a supervisory signal at the fire command center (graphic annunciator) and shall illuminate a lamp adjacent to the fan status indicator at the firefighter's smoke control panel. The capability to manually override the operation of each fan shall be provided to the Fire Department personnel in the fire command center. Fans shall not shut off until manually overridden by Fire Department personnel or until the fire alarm system is reset. Each stairway pressurization system shall indicate that the system is moving air at the firefighter's smoke control panel in accordance with Appendix O. Monitoring of air flow is permitted to be accomplished with torque indication on a variable frequency drive, differential pressure across the fan or current switches on the power feed to the fan. Variable frequency drives used for smoke control systems shall not be required to be UUKL listed. The drive shall not fail to a greater capacity than that associated with the control setpoint for the fan.

909.15.1.3 Design. The air volume introduced into the stairway shall be as follows: 15 floors or less, at least 800 cfm per floor; 16 floors or more, at least 10,000 cfm, plus 200 cfm per floor in excess of 15 floors with 0.5-inch water column static pressure minimum at the duct penetration into the stairway. In order to comply with the requirements of Section 909.13, dynamic static pressure control shall be provided for stairway pressurization fans. Either dynamic static pressure or fixed speed controls shall be provided. Dynamic static pressure controls are permitted to be tuned and set to a fixed value. Air for the stairways serving buildings where the uppermost occupied floor is more than 120 feet above the lowest level of fire department vehicle access shall be introduced into the stairway at a minimum of two injection points. One injection point shall be located not more than 50 feet above the grade plane. In buildings where the uppermost landing of an exit enclosure serves an occupiable floor located more than 250 feet above the lowest level of fire department vehicle access, an engineered design shall be required.

909.15.2 Hoistway pressurization systems.

909.15.2.1 Requirements. Each elevator hoistway with a total rise of 75 feet or more or any elevator hoistway serving any occupiable floor located more than 75 feet above the lowest level of fire department vehicle access shall be mechanically pressurized with outdoor air, via one or more separate, dedicated pressurization systems in accordance with Section 909.15.1.1. Where hoistway pressurization is provided in lieu of required enclosed elevator lobbies in any building as permitted by Section 3006.3 Item 4 of the *Denver Commercial Building Code*, design shall comply with provisions of Section 909.15.2.3

909.15.2.2 Operation. System operation shall comply with Section 909.15.1.2.

909.15.2.3 Design. The air volume introduced into the elevator hoistway shall be as follows: 15 floors or less, at least 900 cfm per floor, plus 270 CFM per door opening, with 0.5-inch water column static pressure minimum at the duct penetration into the hoistway; 16 floors or more, at least 13,500 cfm, plus 270 cfm per door opening, with 0.5-inch w.c. static pressure minimum at duct penetration into the hoistway. In order to comply with the requirements of Section 909.13, dynamic static pressure control shall be provided for hoistway pressurization fans. Dynamic static pressure or fixed speed controls shall be provided. Dynamic static pressure controls are permitted to be tuned and set for a fixed value. In buildings where the uppermost elevator landing serves an occupiable floor located more than 250 feet above the lowest level of fire department vehicle access, an engineered design shall be required. Hoistway pressurization system performance shall not interfere with the opening and closing of elevator doors. Refer to Chapter 30 of the *Denver Commercial Building Code* for door operation.

909.15.2.4 Smoke venting to exterior. Smoke venting of pressurized elevator hoistways to the exterior of the building shall not be required.

909.15.2.5 Elevator machine rooms. Elevator machine rooms may be pressurized indirectly via the elevator hoistway pressurization system through the cable slots in the machine room floor.

909.15.2.6 Lobby/ Areas of rescue assistance. Elevator lobbies designated as areas of rescue assistance are permitted to have the elevator lobby/area of rescue assistance pressurized using the elevator hoistway pressurization system by transferring air to the elevator lobby area of rescue assistance from the hoistway. The lobby/area of rescue assistance shall be pressurized by the transfer of air from the pressurized hoistway through the leakage at the elevator doors. Where *approved* by the *fire code official*, use of transfer openings protected with fire/smoke dampers between the hoistway and the lobby/area of rescue assistance is also acceptable.

909.15.3 Smoke exhaust systems.

909.15.3.1 Requirements. Smoke exhaust system(s) shall be provided in high-rise buildings system shall be controlled via the fire alarm system, to operate in conjunction with the other applicable smoke control systems for the building, in order to achieve the objectives as follows:

1. To maintain a zone of negative pressure in the fire floor (or smoke zone) relative to the other floors or adjacent smoke zones, means of egress stair enclosures and elevator lobby/refuge areas; and...
2. To maintain a maximum stair enclosure or smoke barrier door opening force on the fire floor or smoke zone in alarm. The prescriptive approach described herein is not intended to preclude the use of a performance-based smoke control approach, such as that defined by NFPA 92.
3. Maintenance of tenable environment is not required in the immediate area of fire origin.
4. Shall demonstrate the continual reduction of smoke concentrations from the smoke zone of origin per Section 909.10.1 Item 8.

909.15.3.2 Configuration. Smoke exhaust systems shall include motorized combination fire/smoke dampers or a motorized smoke and a fire damper on each floor of a multi-level building served by the system(s). The exhaust damper(s) in the fire floor smoke zone in alarm shall be commanded open, in order to exhaust that zone, and the smoke exhaust fan commanded to "ON". The exhaust dampers in other smoke zones shall be driven to, or shall remain in, the closed position. The use of smoke dampers shall not preclude the provision of fire dampers, where required by other sections of this code. Exhaust damper(s) shall be located within the upper third of the finish floor height.

909.15.3.3 Design criteria. The general building smoke exhaust system(s) for each floor/smoke zone shall be sized in accordance with the following:

1. The smoke exhaust system shall be sized to remove a minimum of 5 air changes per hour on the fire floor in Occupancy Groups A, B, E and M.
2. The smoke exhaust system shall be sized to remove a minimum of 15 air changes per hour in the typical floor corridors, the typical floor corridors/elevator lobbies, or the typical floor elevator lobbies in Occupancy Groups R-1, R-2, I-1 and I-3. Amenity spaces less than 3,000 square feet in Groups R-1 and R-2 occupancies are not required to be provided with a separate smoke exhaust system.
3. That appropriate consideration shall be made for damper leakage on non-fire floors connected to a central riser system, when selecting the smoke exhaust fan(s).
4. Smoke exhaust systems shall be in ducts constructed in accordance with Section 909.13.8.
5. The engineer shall design make-up air to be available to the smoke zone in alarm so exhaust rates satisfy 909.10.1 Item 8. Submittal documentation shall include analysis presenting methodology for achieving such.

909.15.3.4 Operation. Upon activation of an automatic alarm initiating device as described in Section 907, the following smoke control sequence shall occur:

1. Turn off all supply and make-up air fans, unless used to afford make-up air to the smoke exhaust zone.
2. Open exhaust dampers on the zone in alarm.
3. Close smoke exhaust dampers to all other smoke zones.
4. Close all supply air dampers, unless used to afford make-up air to the smoke exhaust zone.
5. Initiate stairway and elevator hoistway pressurization sequences in accordance with Sections 909.15.1 and 909.15.2.
6. Start exhaust fans.

909.15.4 Street level tenant exception. Smoke exhaust systems shall not be required to serve individual tenant areas or lobbies located on the level of building egress.

909.15.5 Small assembly areas or similar uses exception. Smoke exhaust for assembly areas or similar uses 3,000sf (278m^2) or less in cumulative size for the floorplate shall not be required when these areas are separated by smoke partitions constructed in accordance with Section 710 of the *Denver Commercial Building Code*.

909.16 Smoke control systems for parking garages within high rise structures.

909.16.1 Requirements. Elevator lobbies designated as refuge areas on all floors within an enclosed parking structure shall have the elevator lobby/refuge area pressurized using the elevator hoistway pressurization system by transferring air to the elevator lobby/refuge area. Use of transfer openings protected with fire/smoke dampers between the hoistway and the lobby/refuge area is acceptable.

909.16.2 Open parking garages. A general building smoke control system shall not be required for elevator lobbies that are enclosed and that serve an open parking garage, if direct access without stairs or obstructions is available for people with special needs to exit from the elevator lobby to the open parking garage level or directly to a public way.

909.16.3 Enclosed garages. Exhaust fans associated with an enclosed parking structure shall be capable of manual operation from the smoke control panel. Such exhaust fans will not require a redundant source

of electrical power, and this shall be indicated at the smoke control panel with the words, **"Not on Emergency Power."**

909.17 Smoke exhaust. Smoke exhaust for assembly occupancies with 1,000 occupants or more in high-rise buildings, stages and areas in accordance with Section 410 of the Denver Commercial Building Code, and underground buildings shall comply with Sections 909.17.1 through 909.17.3.1.

909.17.1 Requirements. Each area shall be separated into smoke zones not to exceed 52,000 square feet on a single floor. Smoke zones shall be separated from each other by walls that extend from the floor to the underside of the floor or roof above except for the following:

1. Openings into atriums.
2. Pedestrian bridges between two buildings.
3. Non-required stair enclosures between floors.
4. Open escalators between multiple floors.
5. Where draft stops as prescribed in Section 909.17.2.1 are provided.

909.17.2 Design criteria. Building construction shall be configured in order to support the performance of the smoke exhaust system, in accordance with the following:

1. Where wall separation is not provided between smoke zones, draft stops shall be provided. The configuration of the draft stops shall be as *approved* by the Building and Fire Departments.
2. A smoke zone in alarm shall actuate the respective smoke exhaust system, while smoke exhaust systems in adjacent smoke zones remains inactive.
3. Where smoke zones have wall separations, a positive static pressure differential shall be maintained between adjacent non-alarm zones, relative to the smoke zone in alarm.
4. Sprinkler and smoke detection zones shall coincide with smoke zones.
5. Products of combustion must be demonstrated to be contained within the zone of origin, for smoke zones without wall separations. Failure to restrict products of combustion to the floor or area of origin shall be considered non-compliant with the performance requirements for the smoke exhaust system.

909.17.2. Assembly area smoke zones shall be separated from adjacent zones by draft stops located immediately adjacent to each smoke zone. The draft stops shall be at least 18 inches deep. The draft stops shall be of non-combustible or limited combustible material that will stay in place before and during sprinkler operation.

Exception: Assembly areas smoke zone separation from adjacent smoke zones is not required for ceiling heights 18 feet and greater.

909.17.3 Design criteria. The smoke exhaust system shall exhaust a minimum of six air changes per hour.

909.17.3.1 Operation. Upon activation of a fire alarm initiating device in accordance with Section 907, smoke control operation shall comply with the following:

1. Open exhaust dampers for smoke zone in alarm
2. Start smoke zone exhaust fans
3. Close supply dampers to smoke zone in alarm

4. Adjacent zones go to 100 percent outside air
5. All other systems maintain normal operation

909.18 Reserved.

909.19 Smoke control systems for covered mall buildings. Where required by Section 402 of the *International Building Code,* smoke control systems shall comply with Section 909.14.

909.20 Alteration of smoke control systems in existing high-rise buildings. Smoke control systems shall be maintained in operational condition as required by the code under which the system was installed. The system alteration may be considered for application under this code with approval by the *fire code official*, provided that; the building is fully protected by automatic sprinklers complying with current NFPA 13 provisions for high rise buildings, the building has complying standpipes, and smoke detection is provided in accordance with Section 907.2.13.1.1. Upon approval, the altered configuration shall be considered the new requirement and documented as *approved* by the Denver Building Department and the Denver Fire Department. Future work shall not be allowed to adversely affect the performance of the system. Construction drawings and system sequence of operation shall be submitted for approval in accordance with Appendix O.

SECTION 910
SMOKE AND HEAT REMOVAL

Section 910.3.1 Listing and labeling is replaced in its entirety as follows:

910.3.1 Listing and labeling. Smoke and heat vents shall be *listed* and labeled to indicate compliance with UL 793 or FM 4430.

Exception: Gravity-operated drop out vents are not permitted.

Section 910.3.6 Smoke and heat vent fall protection and its subsection are added as follows:

910.3.6 Smoke and heat vent fall protection. In Group F, M, and S occupancies fall protection shall be provided meeting minimum requirements of Sections 910.3.6.1 and 1108 Items 1, 2 and 3.

910.3.6.1 Fall protection construction. Fall protection shall be of such construction and mounting that they are capable of withstanding a load of at least 400 pounds per square foot applied perpendicularly at any one area on the screen. Covers shall be secured in place to prevent accidental removal or displacement. Opening limitation shall be not more than 6 inches in diameter or of slatwork with openings not more than 2 inches wide with length unrestricted.

SECTION 911
EXPLOSION CONTROL

Table 911.1 Explosion Control Requirements has been amended as follows:

TABLE 911.1 EXPLOSION CONTROL METHODS[f]

MATERIAL	CLASS	EXPLOSION CONTROL METHODS

		Barricade Construction	Explosion (deflagration) venting or explosion (deflagration) prevention systems
Hazard Category			
Flammable gas	Gaseous	Not Required	Required[h]
	Liquefied	Not Required	Required[h]

h. Not required for Category 1B Flammable Gases having a burning velocity not exceeding 3.9 in/s (10 cm/s)SECTION 912

FIRE DEPARTMENT CONNECTIONS

Section 912.2 Location is replaced in its entirety as follows:

912.2 Location. With respect to hydrants, driveways, buildings and landscaping, fire department connections shall be so located that fire apparatus and hose connected to supply the system will not obstruct access to the buildings for other fire apparatus. The location of fire department connections shall be field *approved* by the *fire code official* prior to installation. Fire department connections shall be a minimum of one 2½ x 2½ x 4-inch Siamese or single 2½-inch, as *approved* by the *fire code official*. In buildings with standpipes, an FDC shall be located within 100 ft. of a fire hydrant.

Section 912.2.3 Orientation is added as follows:

912.2.3 Orientation. Fire department connections shall be oriented so inlets are in a horizontal line.

Exception: Two inlets may be stacked with written approval from the *fire code official*.

Section 912.4.1 Locking fire department connection caps is replaced as follows:

912.4.1 Locking fire department connection caps. When required by the *Fire Code Official*, to prevent vandalism & theft, locking connection caps protecting the inlet and swivel shall be provided and compatible with DFD keys .

Section 912.6 Backflow protection is replaced in its entirety as follows:

912.6 Backflow protection and main flow switch. A backflow preventer and flow switch shall be installed on all potable water supply mains serving all *automatic sprinkler systems*.

Exception: Subject to the *fire code official*, backflow prevention and a main flow switch may be omitted on automatic sprinkler systems installed as part of a domestic water supply system.

The backflow preventer shall be installed within 5 feet (610 mm) of the point where the main first penetrates the envelope of the building or structure. The main flow switch shall be installed within 2 feet (610 mm) on the system side of the backflow preventer and in addition to all other flow switches required by this code. The automatic sprinkler system shall be configured so that only one flow switch activates an alarm condition by the actuation of a single sprinkler. When the main and other downstream flow switches can be triggered sequentially by the activation of a single sprinkler, only the flow switch closest to that sprinkler shall be monitored as alarm and actuate exterior notification in accordance with Section 903.4.2; the other sequential flow switches shall be monitored as supervisory.

SECTION 913
FIRE PUMPS

Section 913.1 General is replaced as follows:

913.1 General. Where provided, fire pumps for fire protection systems shall be installed in accordance with this section and NFPA 20. Limited service controllers are not permitted. Access to fire pumps shall comply with Section 509.3.

Exception: Pumps for automatic sprinkler systems install in accordance with Section 903.3.1.3.

Section 913.2 Protection against interruption of service is replaced as follows:

913.2 Protection against interruption of service. The fire pump, driver and controller shall be protected in accordance with NFPA 20 against possible interruption of service through damage caused by explosion, fire, flood, earthquake, rodents, insects, windstorm, freezing, vandalism and other adverse conditions. Except as permitted by NFPA 20, rooms containing fire pumps shall be free of storage, equipment, and penetrations not essential to the operation of the pump and related components.

Section 913.2.2 Circuits supplying fire pumps is replaced as follows:

913.2.2 Circuits supplying fire pumps. Installation of cables used for survivability of fire pump circuits shall comply with NFPA 70 (NEC) Article 695.

Exception: This section shall not apply to cables, or portions of cables, located within a fire pump room or generator room that is separated from the remainder of the occupancy with fire-resistance-rated construction.

Section 913.4 Valve supervision is replaced as follows:

913.4 Valve supervision. Fire pump suction, discharge and bypass valves and isolation valves on the backflow prevention device or assembly shall be supervised by an *approved* central station complying with Section 917.

Section 913.4.1 Test outlet valve supervision is replaced as follows:

913.4.1 Test outlet valve. The hose control valves for the fire pump test outlet(s) shall be located on the exterior of the building. The main supply valve controlling the fire pump test outlet(s) shall be supervised in the closed position.

Section 913.6 Fire pump requirement for non-high-rise buildings and its subsection are added as follows:

913.6 Fire pump requirement for non-high-rise buildings. Where Class 1 manual wet standpipes are required by other provisions of this code, augmentation of the standpipe system by the Denver Fire Department shall comply with Section 913.6.1.

Section 913.6.1 System supply is added as follows:

913.6.1 System supply. Minimum flow rate for the hydraulically most remote standpipe shall be 500 gpm, and the calculation procedure shall be in accordance with NFPA 14. The minimum flow rate for additional standpipes shall be 250 gpm per standpipe, with the total not to exceed 1,000 gpm for buildings that are sprinklered throughout in accordance with NFPA 13 or NFPA 13R. Minimum pressure for system design shall be as required by NFPA 14 with Fire Department pumpers supplying the system with a maximum flow rate of 1,000 gpm and a maximum pressure of 175 psi at the fire department connection (FDC). All system components shall be listed and rated for system working pressure.

Section 913.7 Remote status panel is added as follows:

913.7 Remote status panel. Where the fire pump room is not constantly attended, a fire pump remote operating status panel shall be provided in accordance with NFPA 20. The fire pump remote operating status panel shall be located adjacent to the fire alarm control panel or as determined by the *fire code official*.

Section 913.8 Diesel engine pump drivers is added as follows:

913.8 Diesel engine pump drivers. Diesel drivers for fire pumps shall comply with NFPA 20. A dedicated fuel supply shall be provided sufficient for eight hours of operation. Fill openings shall be located on the exterior of the building with an *approved* fill port. If fuel pumping is required from a main fuel tank to a diesel engine pump driver, a duplex pumping system shall be provided.

SECTION 915
CARBON MONOXIDE DETECTION

Section 915.1.7 Central fuel burning appliances and equipment is added as follows:

915.5 Central fuel burning appliances and equipment. Carbon monoxide detection systems shall be provided for buildings containing a central fuel-burning appliance. The carbon monoxide detection system shall be monitored by the building fire alarm system, where provided. This requirement applies to any new equipment installation for which a permit is required by the Building Department.

Exception: Carbon monoxide detectors are not required for listed fuel-burning cooking appliances.

Section 915.2.4 Central fuel-burning appliances is added as follows:

915.2.4 Central fuel-burning appliances. System carbon monoxide detectors are required for each room containing a central fuel-burning appliance and shall be located within 25 feet of any fuel-burning appliance. This requirement supersedes the locations specified in NFPA 720.

Section 915.5.4 System type carbon monoxide detectors is added as follows:

915.5.4 System type carbon monoxide detectors. Carbon monoxide detectors shall transmit to the central station and be relayed to DFD Dispatch as a separate/distinct signal.

SECTION 916
GAS DETECTION SYSTEMS

Section 916.2.1 Construction documents is replaced as follows:

916.2.1 Construction documents. Documentation of the gas detection system design and equipment to be used that demonstrates compliance with the requirements of this code shall be provided with the application for permit. Shop drawings for gas detection systems shall be submitted for permit application as deferred submittal in accordance with Section 133.-4 of the Administration of the Denver Building Code. Plan review and approval are required prior to issuance of a permit for system installation. Submittals shall comply with Appendix O.

Section 916.3 Equipment is replaced as follows:

916.3 Equipment. Gas detection system equipment shall be designed for use with the gases being detected and shall be installed in accordance with manufacturer's instructions. Separate gas detection system control panels monitored by the building fire or sprinkler alarm control panel, or gas detection system control panels installed in buildings without a fire or sprinkler alarm system are permitted. Where permitted, separate gas detection system control panels shall be installed in *approved* location outside of the potentially contaminated areas. Multiple separate gas detection system alarm control panels are permitted; however,

areas protected by a single gas detection system alarm control panel shall be contiguous. The gas detection control unit shall provide a readout displaying the concentration of gas detected.

Section 916.4 Power connections is replaced as follows:

916.4 Power Connections. Gas detection systems shall be permanently connected to the building electrical power supply on a locked dedicated circuit or shall be permitted to be cord connected to an unswitched receptacle using an *approved* restraining means that secures the plug to the receptacle.

Section 916.8 System Activation is replaced as follows:

916.8 System Activation. A gas detection alarm shall be initiated where any sensor detects a concentration of gas exceeding the following thresholds:

1. For flammable gases, as gas concentration exceeding 25 percent of the lower flammability limit (LFL).
2. For nonflammable gases, a gas concentration exceeding one-half of the IDLH, unless a different threshold is specified by the section of this code requiring a gas detection system.

Upon activation of a gas detection alarm, alarm signals or other required responses shall be as specified by the section of the code requiring a gas detection system.

Section 916.8.1 Audible and visible alarm signals is added as follows:

916.8.1 Audible and visible alarm signals. Audible and visible gas detection system notification appliances shall be installed on the interior and exterior of the areas required by this code to have a gas detection system per the notification requirements of the NFPA 72 with the exception of CO2 and inert gases in section 5307, and supervision of circuits.

Audible and visible notification appliances along with clearly legible signage shall be installed inside and outside of these occupancies in *approved* locations to alert all occupants possibly inside or entering the potentially contaminated area.

Audible gas detection system notification shall have tone and pattern distinctly different from fire alarm and carbon monoxide alarm signals. Visible notification appliances shall be amber strobes or beacons. Subject to the approval of the *fire code official*, complete notification in accordance with NFPA 72 throughout a building or facility beyond the potentially contaminated areas is not required provided the potential for migration of the hazard to other occupied areas is small.

Section 916.9 Signage is replaced as follows:

916.9 Signage. Signs shall be provided adjacent to gas detection system alarm notification appliances to advise occupants of the nature of the signals and actions to take in response to the signal. Signage shall be placed adjacent to all such notification appliances. The sign shall have a minimum 2-inch (50-mm)block lettering with a minimum one-half-inch (13-mm) stroke unless otherwise *approved* by the *fire code official*. The sign shall be on a contrasting surface of black on yellow and shall be of durable construction. Language shall be as *approved* by the *fire code official*.

Section 916.10 Fire alarm system connections is replaced as follows:

916.10 Fire alarm system connections. Gas detection systems shall be monitored by the building fire or sprinkler alarm control panel, where provided. A gas detection system shall be annunciated as a separate zone on the building annunciator, shall be transmitted to the central station as a separate and distinct signal, and shall be relayed to DFD dispatch as such. Where multiple gas detection systems are installed, each shall

be monitored and annunciated separately. Where the fire or sprinkler alarm control panel is not monitored by a supervising station, annunciation shall be provided in an *approved* location. Floor plans of the area protected by a gas detection system shall be provided in accordance with the requirements of Section 907.6.4.1.1.1. If two or more zones are provided on a gas detection system, directory-style LED annunciation shall be provided at the gas detection system control panel and at the fire alarm control panel, if provided. Supervisory and trouble signals shall be annunciated separately with yellow LEDs and alarm signals shall be annunciated with red LEDs.

Section 918 Central Alarm Stations is added as follows:

SECTION 918
CENTRAL ALARM STATIONS

918.1 General. Where required by Section 907.1.6 as amended, monitored protected premises systems shall be connected to an *approved* central alarm station. A Class I central alarm station shall comply with this section. Signals shall be transmitted, received and managed in accordance with NFPA 72. *Approved* central alarm stations shall be listed to UL 827 and as *approved* by the *fire code official*. All central alarm stations shall obtain an annual operating license from the Fire Department and meet the facility construction and operational requirements of NFPA 72. Central alarm stations shall be subject to Fire Department inspection during normal business hours. Installations found not to maintain facility requirements and/or operating procedures in accordance with NFPA 72 or the certificated listing, shall be subject to license revocation by the Fire Department.

Exception: *Approved* protected premises connected directly to Denver Fire Department Dispatch.

918.2 Communication methods. Communication from a protected premises to a central alarm station shall be by digital alarm communicator transmitter (DACT), two-way RF multiplex system or one-way private radio alarm system in accordance with NFPA 72. Alternative performance-based communication technologies may be presented for consideration by the *fire code official* for application in the jurisdiction. Performance-based systems shall be submitted for approval under Section 104.

918.3 Transmission channels. Transmission channels between a protected premises and central alarm stations shall consist of one of the methods of Sections 918.3.1, 918.3.2, 918.3.3 or as *approved* in accordance with Section 918.2 for performance-based technologies. Transmission channels shall be monitored for integrity in accordance with NFPA 72.

918.3.1 DACT transmission. For existing buildings, DACT transmission shall consist of a minimum of one seizable public phone line and an *approved* NFPA 72 Type 4 or Type 5 two-way RF multiplex system, with a network connectivity (Net/Con) of 6 or less, a minimum one-way private radio alarm system complying with Section 918.3.3 or an *approved* alternative communication technology in accordance with Section 918.2.

918.3.2 RF multiplex systems. RF multiplex systems shall consist of sufficient UL-listed fire system transmitter/receivers to establish and maintain a minimum Net/Con of 5 or less as measured by manufacturer-approved test equipment. Primary RF multiplex systems shall meet NFPA 72 requirements for a Type 4 network. RF systems that cannot achieve this required level of reliability shall only be permitted as a secondary communication means in accordance with Section 918.3.1. RF communications of fire alarm signals shall only be permitted over a network dedicated to and listed for transmission and receipt of fire alarm signals. Upon application for a system installation permit for any subscriber unit, the central station licensee shall provide documentation verifying that their network complies with the requirements for a listed, dedicated fire alarm signal network for the protected premises.

918.3 One-way private radio alarm systems. One-way private radio alarm systems shall consist of a network of radio alarm supervising station receivers, radio alarm repeating station receivers and radio alarm transmitters. The system shall be configured for Type 6 or Type 7 operation in accordance with NFPA 72. Radio communications of fire alarm signals shall only be permitted over a network dedicated to and listed for transmission and receipt of fire alarm signals. Upon application for a system installation permit for any subscriber unit, the central station licensee shall provide documentation verifying that their network complies with the requirements for a listed, dedicated fire alarm signal network for the protected premises. Signal quality shall be supervised and maintained in accordance with NFPA 72.

Section 918.4 Runner service is added as follows:

918.4 Runner service. Central stations licensed by the Denver Fire Department shall provide runner service to all properties monitored, in accordance with Section 118.6 and NFPA 72.

Section 919 Transmission of City Microwave Signals is added as follows:

SECTION 919
TRANSMISSION OF CITY MICROWAVE SIGNALS

919.1 General. Construction permits shall not be issued and inspections will not be approved for any building or structure exceeding 60 feet (18.3m) in height which interferes or may interfere with the transmission or reception of City microwave communication signals unless the owner of the building or structure provides for installation of equipment to retransmit or redirect the signal as necessary to eliminate any interference. Such equipment shall be *approved* by and installed at the direction of the Department of Public Safety. A service agreement must also be approved by the Department of Public Safety where transmission is affected by the proposed building or structure prior to the issuance of any permit or Certificate of Occupancy. Such agreements shall include provisions for easements and access for maintenance, electricity for operation, and replacement of equipment.

Section 920 Elevators and Conveying Systems is added as follows:

SECTION 920
ELEVATORS AND CONVEYING SYSTEMS

920.1 General. Elevators and other conveyances shall comply with this code, referenced codes and standards, Colorado State Regulation 7CCR 1101-8, DFD Policy 920.1 and the applicable equipment installation and maintenance standards.

920.1.1 Modification or alteration in conveyance structural elements. Engineered installation shop drawings, specifications, analysis and calculations for structural field modification or alteration to a conveyance shall be submitted to the Denver Fire Department for review and approval. Drawings shall include all connections impacted by the modification or alteration. All submittals shall bear the stamp and signature of a structural engineer registered in the State of Colorado. Technical assistance shall be provided as required by the *fire code official* to evaluate submittals for adequacy. Special inspection of all field welds shall be required for quality control. All welding shall be performed by appropriately certified personnel. Costs for technical assistance and special inspections shall be borne by the installation contractor. Field modification or alteration of conveyance structural elements is not permitted without Denver Fire Department approval.

920.2 New installations. Installation shop drawings shall be submitted for approval prior to installation of any conveyance. Conveyances shall be registered with the State of Colorado Division of Oil and Public Safety before issuance of any installation permit. Shop drawing submittal shall comply with this section and Appendix O. Colorado State registration is not required for residential conveyances and temporary construction elevators.

920.3 Alterations to existing conveyances. Alterations to existing conveyances as defined in Colorado Code of Regulations 7CCR1101-8 shall require submittal of shop drawings for approval in accordance with Section 920.2. Conveyances shall have a valid Colorado State registration number, a current Certificate of Operation, and Operational Permit prior to approval of any alterations. Colorado State registration is not required for residential conveyances and temporary construction elevators. Operational permits are not required for dormant conveyances.

920.4 Removal from service. Permits shall be obtained from the fire department prior to any conveyance being removed from service, made dormant or otherwise rendered inoperable. If an entire building is being demolished a valid demolition permit issued by the City and County of Denver shall be accepted as verification of a conveyance being removed from service and may eliminate the need for a permit for removal to be obtained.

920.5 Annual conveyance operating permit. All buildings or facilities where an elevator, escalator, or AGTS are located shall obtain an annual conveyance Operational/Certificate of Operation permit in accordance with DFD policy 920.5. No conveyance shall be operated without a valid Operational/Certificate of Operation permit. Elevators, escalators, and the AGTS operating without a current Operational/Certificate of Operation will be subject to double Operational Permit fees. Conveyance contractors shall not perform maintenance, replace components, conduct repair work or perform testing on elevators, escalators, or AGTS that do not have a current Operational/Certificate of Operation permit

Exceptions:

1. Conveyances issued a Construction Use Certificate of Operation when operating under the terms of that Certificate.
2. Residential elevators complying with Section 920.20.

920.5.1 Change in contact information. The conveyance owner shall be responsible for notifying the Administrator of any change in ownership or management contact information within 30 days of the change.

920.6 Standardized key switches. All elevators shall be provided with standardized key switches for emergency operation in accordance with Section 606.8.1.

920.7 Venting of hydraulic tanks located in hoistways. New and existing elevators permitted to have a hydraulic tank located in the hoistway in accordance with ASME A17.1 shall be provided with tank venting in accordance with DFD Policy 9920.7.

920.8 Emergency and standby power. Where emergency or standby power is provided to elevators or other conveyances as required by this code, the *Denver Commercial Building Code*, other applicable standards or voluntarily, installation and operation shall comply with Sections 604 and 606.

Exception: Where emergency or standby power is required for platform lifts as part of an accessible means of egress in accordance with Section 1009.4 of the *Denver Commercial Building Code*, battery-powered units are acceptable where the battery capacity meets the requirements of ASME A18.1. Battery-powered units shall be provided directly by the platform lift manufacturer in accordance with the equipment listing.

920.8.1 Auxiliary power lowering operation. provided in accordance with ASME A17.1 shall be permitted and shall not be considered as an emergency or standby power source.

920.9 Fire service access elevators. Where required by the *Denver Commercial Building Code*, fire service access elevators shall be provided. Elevator system monitoring, electrical power, sprinkler protection, protection of wiring or cables and standpipe hose connection access shall comply with Section 3007 of the *Denver Commercial Building Code*. Elevator monitoring panels shall be submitted for approval prior to installation and shall monitor and display the conditions in accordance with NFPA 72, 21.5.1. Occupancy of elevator cars shall be continuously monitored by CCTV or other means *approved* by the *fire code official*. The CCTV screen shall be integrated into the elevator status panel and shall measure a minimum of 9-inch diagonally. Shunt trip operation shall not be permitted for fire service access elevators.

920.9.1 Fire Service Access Elevators. A pictorial symbol designating the fire service access elevator(s) shall be installed on the jambs at the designated landing in accordance with DFD Policy. Existing Fire Service Access Elevators shall have this symbol installed at the designated landing.

920.10 Elevators with destination dispatch. Where elevators with destination dispatch are provided, they shall be provided with a common Phase I recall key switch and indicator located in the lobby within sight of the elevator or all elevators in that group and shall be readily accessible.

920.11 "TWIN" type elevators. Installation of "TWIN" elevators shall be as approved by the State of Colorado Division of Oil and Public Safety and the *fire code official*.

920.12 Elevator firefighter indicator. The operation of the elevator firefighter indicator (firefighter hat symbol) shall comply with Section 907.3.3.5.

920.13 Elevator in-car communications. Where required by ASME A17.1, two-way in-car communications shall be provided from the car to an *approved* location. Authorized personnel at the receiving station shall notify the Denver Fire Department in accordance with Section 401.3.2 of any indication of a trapped party medical emergency or non-responsive occupant or presence of smoke or fire.

920.14 Elevator building communications for elevator rise of 60 feet (18.5m) or more. Where required by ASME A17.1, two-way communications shall be provided for emergency personnel to communicate directly with occupants of the elevator car. Communications equipment for emergency responder use shall be located in the Fire Command Center~~,~~ where provided, or adjacent to the fire alarm control unit. Where elevators within a building are required to comply with this section, these elevators shall be identified at the emergency responder communication means. Two-way communication system from the elevator to the Fire Command Center shall be incorporated on the elevator status panel.

920.15 Inspections. Conveyance annual and periodic inspections shall comply with State Conveyance Regulations 7CCR 1101-8, manufacturer's specifications, the Maintenance Control Program and this code.

920.15.1 Inspection. All conveyances shall be inspected annually.

920.15.2 Certificate of operation. A conveyance shall not operate unless the conveyance owner maintains a current certificate of operation for the conveyance. The certificate of operation shall be available for review at the property where the conveyance is located.

920.15.3 Inspection submittal. Licensed Conveyance Inspectors shall submit complete and accurate inspection reports to DFD Conveyance Program within 5 business days of the inspection

920.16 Alterations to elevator car dimensions and/or hoistway openings. Alterations to dimensions of existing elevator cars and hoistway openings is subject to approval by the *fire code official*. Alterations to dimensions of elevator cars and/or hoistway openings shall not be permitted unless such alterations meet the requirements for a new installation.

920.17 Conveying systems. Escalators, moving walks, conveyors, platform lifts, dumbwaiters, stairway chair lifts, personnel hoists, material lifts and material hoists shall comply with the provisions of this code and Chapter 30 of the *Denver Commercial Building Code*.

920.18 Automated Guideway Transportation Systems (AGTS). AGTS shall comply with Sections 920.2, 920.3, 920.5, and ASME 21 as adopted by the State of Colorado.

920.19 Conveyances used during construction. Elevators and personnel hoists used during construction shall comply with ASME A17.1 Section 5.10, ANSI A10.4 and DFD Policy920.5. Upon installation or modification, certification shall be provided to the Department that the required acceptance test was performed in accordance with the *approved* plans, ANSI A10.4 and the manufacturer's installation instructions. Such certification shall also be provided for each periodic inspection required at intervals not to exceed 90 days. Certifications shall bear the signature and license number of a Denver licensed inspector.

920.19.1 Door locking devices. Electro-mechanical hoistway door interlocks shall be provided at all landings.

920.20 Residential elevators. All elevators used in private residences shall comply with ASME A17.1 Section 5.3 and DFD policy 920.2-01. Installation or alteration of an elevator in a private residence shall be submitted for approval in accordance with Section 920.2 or Section 920.3.

920.20.1 Certificate of operation. Residential elevators are required to have a current Certificate of Operation issued by the DFD Conveyance Program . Certificates shall be valid for a period of three years and shall require submission to the Department of an inspection affidavit signed by a Denver licensed inspector prior to issuance or renewal.

920.21 Elevator Identification. Where more than one elevator exists, the alphabetical or numerical identification of the elevator shall be placed on both doorjambs of every elevator entrance at the designated level, alternate level, level where means necessary for tests is provided, and level test panel is provided; this identification shall be a minimum of two inches (50 mm) in height and shall be located immediately below the floor designation, where provided.

920.22 Elevator contractor response. Following an elevator entrapment where fire crews have responded and require the assistance of elevator personnel, the onsite incident commander (IC) or building responsible party shall notify the elevator contractor of record through the contractor's emergency dispatch center that a licensed conveyance mechanic is required onsite to give guidance to emergency personnel on extracting entrapped passengers.

In response, the elevator contractor of record shall:

1. Dispatch a licensed conveyance mechanic to the site; and,
2. The elevator mechanic shall be onsite within one hour.

Building owners or their designee are responsible for posting the name of the elevator contractor of record and its emergency dispatch center or other contact number(s). The elevator contractors contact information shall be provided in durable construction, easily readable in normal lighting, protected by a smooth, transparent, plastic surface and be located at the following locations.

1. Fire Command Center (FCC) where provided or,
2. Adhered to the inside cover of the Fire Alarm Control Panel (FACP) when no FCC is present, or,
3. In the elevator Machine Room, if no FACP is present.

Only a licensed conveyance mechanic shall restore power and place the conveyance back into service after verifying the conveyance is safe for public use in accordance with Section 920.5, following an event where power to a conveyance was removed by Denver Fire Department personnel.

920.23 Disconnect location. The Licensed Elevator Contractor shall ensure the location of each elevator electrical disconnect is detailed on a matrix and included on the graphic map in accordance with Section 907.6.4.1.1.1. The matrix shall be posted within a display of durable construction, easily readable in normal lighting, protected by a smooth, transparent plastic surface and shall include the following information.

1. The floor number(s) that the disconnect(s) are located
2. Which elevator the disconnect operates
3. Room name/number

This display shall be located in the fire command center adjacent to elevator panels where provided or next to the fire alarm control panel.

920.23.1 Existing Elevators. Existing elevators shall conform with Section 920.23 by January 1, 2024

920.24 Fire-rated suspension and controller replacements. Noncircular elastomeric-coated or polyurethane-coated steel belts used in new elevator installations and alterations shall be fire rated. Coated steel belts utilized in existing elevators shall be replaced with the fire-rated type at time of suspension means or controller replacement. The fire rating shall not be less than an FT-1 rating when tested to the vertical burn test requirements of UL 2556, Wire and Cable Test Methods, where the suspension means shall not continue to burn for more than 60 seconds, nor shall the indicator flag be burned more than 25 percent.

CHAPTER 10
MEANS OF EGRESS

Chapter 10 of the International Fire Code is amended in accordance with Chapter 10 of the Denver Commercial Building Code.

CHAPTER 11
CONSTRUCTION REQUIREMENTS FOR EXISTING BUILDINGS

SECTION 1101
GENERAL

Section 1101.1 Scope is replaced as follows:

1101.1 Scope. The provisions of this chapter shall apply to existing buildings constructed prior to the adoption of this code when the applicable requirements for such buildings cannot be ascertained by the following:

1. The building and fire codes in effect when the building was permitted for construction and no change of occupancy occurred since that time.
2. The building and fire codes in effect when the building was last certified for occupancy
3. All applicable retrofit ordinances, including retroactive regulations contained elsewhere in this Code
4. Modification under Section 106 of the Administration of the Denver Building Code.
5. Subject to approval by the *fire code official*, existing life safety features that exceed the requirements for new buildings shall be permitted to be decreased to those required for new buildings.

6. Existing life safety features that do not meet the requirements for new buildings, but that exceed the requirements for existing buildings, shall not be further diminished.

1101.1.1 Existing buildings. Existing buildings shall comply with the requirements of Sections 1103.2, 1103.3, 1103.7.5, 1103.9, 1107, and 1108.

Section 1101.2 Intent is replaced as follows:

1101.2 Intent. The intent of this chapter is to provide a minimum degree of fire and life safety to persons occupying existing buildings by providing minimum construction requirements where such existing buildings do not comply with the minimum requirements of the Denver Building Code. It is intended for existing buildings to comply under the Code which it was constructed, certified for occupancy, any alternate means of Code compliance approvals, and retrofit / retroactive Codes previously adopted.

SECTION 1103
FIRE SAFETY REQUIREMENTS FOR EXISTING BUILDINGS

Section 1103.1 Required construction is amended by adding Exception 3 as follows:

3. See Section 3211 for requirements for existing buildings constructed **prior to October 1990** and used for high-piled or rack storage.

Section 1103.2 Emergency responder radio coverage in existing buildings is replaced as follows:

1103.2 Emergency responder radio coverage in existing buildings. See Section 510.1.2.

Section 1103.3.1 Elevators, escalators and moving walks is replaced as follows:

1103.3.1 Elevators, escalators and moving walks. Existing elevators, escalators and moving walks in Group I-2 Condition 2 occupancies shall comply with *Colorado State Regulations,* as amended from time to time.

Section 1103.3.2 Elevator emergency operation is replaced as follows:

1103.3.2 Elevator emergency operation. Existing elevators with a travel distance of 25 feet (7620 mm) or more above or below the main floor or other level of a building and intended to serve the needs of emergency personnel for firefighting or rescue purposes shall be provided with emergency operation in accordance with *Colorado State Regulations.*

Exceptions 1 and 2 to remain; Exception 3 is amended as follows:

3. Freight elevators in buildings provided with automatic sprinkler systems installed in accordance with Section 903.3.1.1 or 903.3.1.2.

Section 1103.7.1 Group E is amended by adding Exception 3 as follows:

3. All *approved* installations of battery-operated smoke alarms shall be replaced with UL 217 listed battery-operated smoke alarms provided with permanent integral 10-year lithium batteries and resistance to nuisance alarms. Continued use of battery-operated smoke alarms shall be subject to approval by the *fire code official*.

Section 1103.8.3 Power source is amended by adding the following at the end of the section:

All *approved* installations of battery-operated smoke alarms shall be replaced with UL 217 listed battery-operated smoke alarms provided with permanent integral 10-year lithium batteries and

resistance to nuisance alarms. Continued use of battery-operated smoke alarms shall be subject to approval by the *fire code official*.

Section 1103.9 Carbon monoxide alarms is amended by adding the following at the end of the section:

Where *approved*, replacement and new CO alarms shall be UL 2034 listed battery-operated CO alarms provided with permanent integral 10-year lithium batteries.

Section 1103.9.1 Central fuel burning appliance rooms is added as follows:

1103.9.1 Central fuel burning appliance rooms. Carbon monoxide detectors monitored by the building fire alarm system shall be installed in central fuel burning appliance rooms in existing buildings containing a fuel burning appliance for which an installation permit was issued by the Building Department after **July 1, 2009**. Each central fuel-burning appliance room shall be annunciated on its own zone.

Exception: In existing *buildings,* battery-powered or plug-in single- or multiple-station carbon monoxide alarms may be installed in central fuel-burning appliance rooms in lieu of system detectors and need not be monitored by a fire alarm system. *Approved* battery-only alarms shall comply with Section 1103.9.

Devices shall be installed within 25 feet of every fuel-burning appliance and initiate an alarm condition when activated. A single device is permitted to fulfill multiple location criteria in a single central fuel-burning appliance room.

Section 1103.9.1.1 System type carbon monoxide detectors is added as follows:

1103.9.1.1 System type carbon monoxide detectors. Carbon monoxide detectors shall transmit to the central station as a separate/distinct signal and be relayed to DFD Dispatch as such.

SECTION 1105
CONSTRUCTION REQUIREMENTS FOR EXISTING GROUP I-2

Section 1105.1 General is amended by adding an Exception as follows:

Exception: The requirements of Section 1105 shall not apply for Group I-2 occupancies which comply with the 2012 NFPA 101 Chapter 19 provisions for existing hospitals, nursing homes, and limited care facilities. For the purposes of this exception; the term hospital, shall include general hospitals, psychiatric hospitals, and specialty hospitals, the term nursing home, shall include nursing and convalescent homes, skilled nursing facilities, intermediate care facilities, and infirmaries in homes for the aged.

Section 1107 Requirements for Compressed Gas Systems is added as follows:

SECTION 1107
REQUIREMENTS FOR COMPRESSED GAS SYSTEMS

1107.1 Compressed gas systems. Existing compressed gas systems located within existing buildings shall meet all the requirements of Sections 1107.1.1 through 1107.1.4.

1107.1.1 Carbon dioxide (CO_2) systems used in beverage dispensing applications. Existing carbon dioxide (CO_2) systems used in beverage dispensing applications shall comply with Section 5307.3.

1107.1.2 Inert gas systems used in commercial, manufacturing or industrial applications. Existing inert gas systems used in commercial, manufacturing or industrial applications shall comply with Section 5307.6.

1107.1.3 Carbon dioxide (CO_2) gas enrichment systems using on-site supply tanks and/or cylinders in plant growing (husbandry) applications. Existing carbon dioxide (CO_2) gas enrichment systems using on-site supply tanks and/or cylinders in plant growing (husbandry) applications shall comply with Section 5307.4.

1107.1.4 Carbon dioxide (CO_2) gas enrichment systems using a natural gas burner in plant growing (husbandry) applications. Existing carbon dioxide (CO_2) gas enrichment systems using a natural gas burner in plant growing (husbandry) applications shall comply with Section 5307.5.

SECTION 1108 Firefighter Fall Protection is added as follows:

SECTION 1108
FIREFIGHTER FALL PROTECTION

1108.1 Firefighter fall protection. All existing buildings are required to meet the following to ensure safe and effective rooftop access for rooftop maintenance and firefighting operations. Materials shall comply with UL 1994. Signs or decals shall be posted in English and in the predominant language of workers. Signs, decals and striping affixed to the exterior of the building shall be suitable for the environment.

1. Self-luminous or reflective signs or decals *approved* by the *fire code official* are required on building exterior walls when the locations of rooftop access landing areas are not apparent from the street.
2. Self-luminous or reflective signs or decals *approved* by the *fire code official* shall be attached to each skylight, trap door, roof hatch, and scuttle cover; the sign or decal shall be on the surface, with striping around the entire perimeter.
3. Self-luminous or reflective signs or decals *approved* by the *fire code official* shall be placed at entries (doors, stairs, ladders, or roof hatches) to areas containing skylights, trap doors, roof hatches, and scuttle covers.
4. Existing non-metallic panels with curb heights eight inches or less that are present between metal panels on roofs shall be replaced with metal panel(s) with the equivalent gauge and material properties as the existing roof panels. Perimeter guardrails or fall protection can be used in lieu of replacement of existing non-metallic panels when these systems comply with OSHA 29 CFR1926.502. Self-luminous or reflective signs or decals *approved* by the *fire code official* shall be placed on perimeter guardrails.

Exception: Existing *One- and two-family dwellings* and *townhouses* constructed in accordance with the *Denver Residential Code*.

CHAPTER 12
ENERGY SYSTEMS

SECTION 1203
EMERGENCY AND STANDBY POWER SYSTEMS

Section 1203.1.1 Stationary generators is amended by adding the following to the end of the sentence:

…and operated by a diesel-fueled prime mover.

Section 1203.1.1.1 Optional standby generators is added as follows:

1203.1.1.1 Optional standby generators. Optional standby generators shall be permitted in accordance with NFPA 70 (NEC) Article 702. Generators shall be fueled by a diesel or natural gas fuel source. Gaseous fuels shall be provided by a public utility and piped to the unit. Where diesel-fueled generators are located at other than grade level, individual fuel tank capacity shall not exceed 120 gallons, with a total capacity not to exceed 660 gallons on any building story or level.

Section 1203.1.3 Installation is amended by adding the following after the last sentence:

All generators shall be provided with a remote status panel in accordance with NFPA 110 and complying with Section 907.2.13.8. Optional standby generators shall also be provided with a remote status panel. Panel location shall be adjacent to the fire alarm control panel when provided or in an area *approved* by the *fire code official*.

Section 1203.1.5 Load duration is replaced as follows:

1203.1.5 Load duration. Emergency power systems and standby power systems shall be designed to provide the required power for a minimum duration of 2 hours without being refueled or recharged, unless specified otherwise in this code. If fuel pumping is required from a main fuel tank to a day tank, a duplex pumping system shall be provided. Fuel storage and handling shall comply with Chapter 57. Fuel supplies for emergency or required standby systems shall be located on-site.

Exception: Emergency generators supplying fire pumps shall have a fuel supply for eight hours of simultaneous operation of all connected emergency equipment.

Section 1203.1.6 Uninterruptible power source is replaced as follows:

1203.1.6 Stored energy emergency or standby power systems. Stored energy emergency and standby power systems required by this code shall be installed in accordance with Section 1207 and NFPA 111 and shall have sufficient capacity to operate under full load for 90 minutes.

Section 1203.1.10 Location is added as follows:

1203.1.10 Location. All generators required by this code shall be located at grade level, or one level below grade with the filling connection located in accordance with Chapter 57. Enclosure provisions shall comply with NFPA 110.

Exceptions:

1. Stationary emergency and legally required standby power generators in a stand-alone open parking garage less than 55 feet in height, shall be permitted to be located on the topmost atmospheric level.
2. Stationary emergency generators located in a stand-alone utility plant are permitted to be located one level above the level of exit discharge with a fuel capacity of not more than 240 gallons on that level.

3. Stationary emergency and legally required standby power generators shall be permitted to be located at one level above grade where all of the following are met:

   a. Individual fuel tank capacity shall not exceed 120 gallons at the generator day tank.

   b. Supply tank shall be provided at grade level with filling connection located in accordance with Chapter 57.

   c. Duplex pumping system shall be provided between the supply tank and generator day tank.

   d. The aggregate capacity of fuel tanks shall not exceed 660 gallons.

Section 1203.1.10.1 Outdoor locations is added as follows:

1203.1.10.1 Outdoor locations. Where generators are located outside of a building, the following provisions shall apply.

a. Generators shall be located at least 5 feet from the exterior wall of the building. A generator may be located within 5 feet of the building if the exterior wall is non-combustible and has a 2-hour fire resistance rating. The separation distance of the generator to the exterior wall shall be maintained as required by NFPA 70 and the manufacturer's recommendations. The fire resistance rated exterior wall shall extend at least 3 feet above the generator enclosure.

b. A minimum 10-foot separation shall be maintained between a generator and any transformer, or a 2-hour fire resistance rated masonry or concrete wall shall be provided between the generator and the transformer. The separation wall shall be no less than 6 feet above the highest ground elevation on either side of the wall and not less than 2 feet above the top of the generator or transformer whichever is lower. Separation distance between this equipment and the exterior wall shall comply with NFPA 70.

Section 1203.2.2 Elevators and platform lifts is amended by adding the following to the end of the paragraph:

Standby power for platform lifts shall comply with ASME A18.1.

Section 1203.2.3 Emergency responder radio coverage systems is replaced as follows:

1203.2.3 Emergency responder radio coverage systems. Emergency power shall be provided for emergency responder radio coverage systems in accordance with Section 510.3.

Section 1203.2.11 High-rise buildings is replaced as follows:

1203.2.11 High-rise buildings. Emergency power shall be provided for high-rise buildings as required in Section 403 of the *Denver Commercial Building Code* and shall be in accordance with Section 1203.

Section 1203.2.18 Smoke control systems is replaced as follows:

1203.2.18 Smoke control systems. Standby power shall be provided for smoke control systems as required in Section 909.7.

Section 1203.2.20 Covered mall buildings is added as follows:

1203.2.20 Covered mall buildings. Covered mall buildings exceeding 50,000 square feet (4,645 m2) shall be provided with emergency power systems which are capable of operating the emergency voice/alarm communication system, the smoke control system, where provided, in accordance with Section 909, the fire pump and one accessible elevator.

Section 1203.7 Emergency and standby (required or optional) power generator shop drawings is added as follows:

1203.7 Emergency and standby (required or optional) power generator shop drawings. Shop drawings for emergency and standby (required or optional) power generator systems shall be submitted for permit application as a deferred submittal in accordance with Section 133.4 of Section 1 of the *Denver Building Code*. Plan review and approval are required prior to issuance of a generator construction permit for system installation. Two sets of scaled, engineered installation shop drawings shall be submitted. Documents shall be of sufficient clarity and detail to fully describe the scope of work. Handwritten notes and comments on reproduced drawings are not acceptable. Submittals shall comply with Appendix O.

SECTION 1207
ELECTRICAL ENERGY STORAGE SYSTEMS

Section 1207.1 General is amended by adding the following to the end of the section:

ESS shall comply with IFC 1207 and NFPA 855.

Section 1207.5.4 Fire detection is amended to add an exception as follows:

Exception: A dedicated detached on-grade structure not exceeding 1,000 square feet..

Section 1207.6.2 Spill control and neutralization and both subsections are replaced as follows:

1207.6.2 Spill control and neutralization. An *approved* method and materials for the control and neutralization of a spill of electrolyte shall be provided in areas containing lead-acid, nickel-cadmium or other types of batteries with free-flowing liquid electrolyte. Each rack of batteries or groups of racks shall be provided with a liquid-tight 4-inch (101.6mm) minimum spill-control barrier which extends at least 1-inch (25.4 mm) beyond the battery rack in all directions. For the purposes of this paragraph, a "spill" is defined as any unintentional release of electrolyte.

Exception: VRLA, lithium-ion or other types of sealed batteries with immobilized electrolyte shall not require spill control.

CHAPTER 20
AVIATION FACILITIES

SECTION 2001
GENERAL

Section 2001.1 Scope is replaced as follows:

2001.1 Scope. Airports, heliports, helistops, and aircraft hangars shall be in accordance with this Chapter and applicable sections of Appendix S of the *Denver Commercial Building Code*.

Section 2001.3 Permits is replaced as follows:

2001.3 Permits. Permits to operate aircraft-refueling vehicles, application of flammable or combustible finishes, hot work, aviation fuel dispensing facilities – maintenance and inspection, and emergency fuel shut off (EFSO) impairment fire watch shall be in accordance with Section 105.5.

SECTION 2005
PORTABLE FIRE EXTINGUISHERS

Section 2005.6 At fuel-dispensing stations is replaced as follows:

2005.6 At fuel-dispensing stations. Portable fire extinguishers shall not be located in probable spill areas. To provide accessibility from adjoining gates, portable fire extinguishers shall be located approximately midway between gate positions.

Portable fire extinguishers at fuel-dispensing stations shall be located such that pumps or dispensers are not more than 50 feet from an extinguisher. The maximum distance between extinguishers shall not be over 200 feet. Where the specified portable fire extinguishers are brought into the aircraft fuel servicing areas prior to the fueling operation, they shall be located upwind not over 50 feet from the aircraft being serviced. Fire extinguishers shall be provided as follows:

1. Where the open-hose discharge capacity of the fueling system is not more than 200 gallons per minute, a minimum of two listed portable fire extinguishers complying with Section 906 and having a minimum rating of 20-B:C shall be provided.
2. Where the open-hose discharge of the fueling system is more than 200 gallons per minute but not more than 350 gallons per minute, a minimum of two listed wheeled extinguishers complying with Section 906 and having a minimum extinguishing rating of 80-B:C and a minimum agent capacity of 125 pounds shall be provided.
3. Where the open-hose discharge capacity of the fueling system is more than 350 gallons per minute, a minimum of three listed wheeled extinguishers complying with Section 906~~,~~ and having a minimum rating of 80-B:C each and a minimum capacity agent of 125 pounds each shall be provided.

SECTION 2006
AIRCRAFT FUELING

Section 2006.6 Emergency fuel shutoff is amended by adding the following at the end of the paragraph:

The emergency fuel shutoff system (EFSO) is an emergency alarm and shall comply with this section and Section 908.4. Emergency fuel shutoff switches shall be of a yellow back plate with a red, mushroom head type, listed for use, with a protective cover to prevent inadvertent contact and shall only be reset by a key accessible only to authorized personnel. Activation of the emergency alarm system shall activate a local blue strobe or beacon. Locations, performance and marking shall comply with NFPA 407 and shall be field approved prior to installation by the DFD DEN fueling inspector.

Section 2006.12.1 Auxiliary power unit (APU) is added as follows:

2006.12.1 Auxiliary power unit (APU). Fuel servicing shall not be performed on a fixed-wing aircraft while an onboard engine, APU or heater, is operating.

Exception: In an emergency resulting from the failure of an onboard auxiliary power unit on a jet aircraft, and in the absence of suitable ground support equipment, a jet engine mounted at the rear of the aircraft or on the wing on the side opposite the fueling point shall be permitted to be operated during fueling or defueling to provide power, provided that the operation follows written procedures approved by Denver International Airport and the Denver Fire Department.

SECTION 2007
HELISTOPS AND HELIPORTS

Section 2007.9 Helistops on roofs is added as follows:

2007.9 Helistops on roofs. In addition to other applicable portions of this code, helistops located on roofs shall comply with the following:

1. Smoking is prohibited on the roof operating area during landing and takeoff operations.
2. Persons, other than helistop personnel, shall be restricted to designated protected or fenced waiting areas during landing and take-off operations.
3. Loose material such as gravel is prohibited.
4. Openings in the roof shall not be permitted in the immediate landing area.
5. Major repair and maintenance operations are not permitted on the helistop except in cases of emergency, and only with prior notification to the Fire Department.
6. Communication facilities shall be provided from the helistop to the department and building personnel for emergency notification.
7. Helistop personnel shall be trained in the use of communication and fire extinguishing equipment.
8. The storage of flammable liquids or highly combustible materials on the roof is prohibited.
9. An exterior (weatherproof) manual pull station shall be provided by each exit and shall be connected to the building alarm system.
10. At least 100 feet of *approved* 1.5-inch hose equipped with an *approved* fog nozzle and a 2.5-inch male NST reduced to a 1.5-inch male Denver thread shall be provided in a weatherproof cabinet adjacent to the roof standpipe.

CHAPTER 23
MOTOR FUEL-DISPENSING FACILITIES AND REPAIR GARAGES

SECTION 2303
LOCATION OF DISPENSING DEVICES

Section 2303.2 Emergency disconnect switches is replaced as follows:

2303.2 Emergency disconnect switches. An *approved* clearly identified and readily accessible emergency disconnect switch shall be provided at an *approved* location to stop the transfer of fuel to the fuel dispensers in the event of a fuel spill or other emergency. The emergency disconnect switch for exterior fuel dispensers shall be located in an accessible location outside in accordance with this section. Emergency disconnect switches shall be of a red, mushroom head type, listed for use, with a protective cover to prevent inadvertent contact and shall only be reset by a key located on premises accessible to authorized personnel. Installation of emergency disconnect switches shall comply with NFPA 70 (NEC). Emergency disconnects shall be located within 100 feet (30 480 mm) of but not less than 20 feet (6096 mm) from, the fuel dispensers. For interior fuel-dispensing operations, the emergency disconnect switch shall be installed at an *approved* location. All emergency disconnect switches shall be distinctly labeled as: **EMERGENCY FUEL SHUTOFF**. Signs shall be provided in *approved* locations. Access to emergency disconnect switches shall be unobstructed. Removal of equipment, merchandise, vehicles, storage, etc., to reach the emergency disconnect does not meet the requirement for a "readily accessible" location.

SECTION 2304
DISPENSING OPERATIONS

Section 2304.2.5 Communications is replaced as follows:

2304.2.5 Communications. The attendant shall be able to communicate with persons in the dispensing area at all times with a two-way hard-wired communication system. An *approved* method of communicating with the fire department shall be provided for the attendant.

Section 2304.3 Unattended self-service motor fuel-dispensing facilities and all subsections are replaced as follows:

2304.3 Unattended self-service motor fuel-dispensing facilities. Unattended public self-service motor fuel-dispensing facilities are prohibited.

SECTION 2305
OPERATIONAL REQUIREMENTS

Section 2305.6.1 Lettering is added as follows:

2305.6.1 Lettering. Warning signs shall have the word "**WARNING**" in red letters of not less than 1.5 inches in height and the remainder of the signs shall have red letters of not less than one inch in height on a white background.

Exception: Existing *approved* signs consisting of contrasting lettering and background.

SECTION 2308
COMPRESSED NATURAL GAS MOTOR FUEL-DISPENSING FACILITIES

Section 2308.7 Emergency shutdown control is amended by adding the following after the last sentence.

The emergency shutdown control switch shall be of a type complying with Section 2303.2.

SECTION 2309
HYDROGEN MOTOR FUEL-DISPENSING AND GENERATION FACILITIES

Section 2309.5.3 Emergency shutdown controls is amended by adding the following after the last sentence.

The emergency shutdown control switch shall be of a type complying with Section 2303.2.

SECTION 2311
REPAIR GARAGES

Section 2311.4.3 Ventilation is replaced as follows:

2311.4.3 Ventilation. Where Class I liquids or LP-gas are stored or used within a building having a basement or pit wherein flammable vapors could accumulate, the basement or pit shall be provided with mechanical ventilation in accordance with the *Denver Mechanical Code,* at a minimum rate of 1.5 cubic feet per minute per square foot (cfm/ft^2) [0.008 m^3/(s · m^2)] to prevent the accumulation of flammable vapors. The fan shall be configured in such a way that it runs continuously, and the exhaust inlet is placed within 12 inches of the pit floor.

Sections 2311.4.4 Fire protection systems is added as follows:

2311.4.4 Fire protection systems. In buildings equipped with an automatic sprinkler system, pits and below-grade work areas shall be protected. Sprinkler systems in pits and below-grade work areas shall be separately zoned and the control valve shall be located outside the pit or below-grade work area.

2311.4.5 Flammable vapor monitoring is added as follows:

2311.4.5 Flammable vapor monitoring. Pits and below-grade work areas shall be equipped with a flammable vapor-monitoring alarm. Alarm notification shall be local only and provided in an *approved* location(s).

2311.4.6 Warning signs is added as follows:

2311.4.6 Warning sign(s). Pits and below grade work areas shall be identified as required. Doors or openings leading to a pit or below grade work area shall be plainly marked with the words "**OPEN PIT**" in red letters at least six inches high on a white background. Such warning signs shall be placed so as to be unobstructed and readily discernible.

Section 2311.8.9.1 System activation - Item 1 is replaced as follows:

1. Initiation of distinct audible and visual alarm signals in the repair garage shall be in accordance with Section 916. Signage required by Section 916.9 shall state outside of the room: "**DO NOT ENTER WHEN LIGHT IS FLASHING – NONODORIZED FLAMMABLE GAS LEAK DETECTED**" and inside of the room: "**FLASHING LIGHT MEANS NONODORIZED FLAMMABLE GAS LEAK DETECTED – EVACUATE ROOM AND BUILDING**".

Section 2312 Existing Motor Fuel-Dispensing Facilities is added as follows:

SECTION 2312
EXISTING MOTOR FUEL-DISPENSING FACILITIES

2312.1 Mounting of dispensers. Existing motor fuel dispensing facilities shall have the dispensing devices, except those installed on top of a protected above-ground tank that qualifies as vehicle-impact resistant, protected against physical damage in accordance with Section 312. Dispensing devices shall be securely fastened to their mounting surface in accordance with the dispenser manufacturer's instructions. Dispensing devices installed indoors shall be located in an *approved* position where they cannot be struck by an out-of-control vehicle.

2312.2 Emergency disconnect switches. Existing motor fuel-dispensing facilities shall have an *approved* clearly identified and readily accessible emergency disconnect switch provided at an *approved* location to stop the transfer of fuel to the fuel dispensers in the event of a fuel spill or other emergency. The emergency disconnect switch for exterior fuel dispensers shall be located in an accessible location outside in accordance with this section. Emergency disconnect switches shall be of a red, mushroom head type, listed for use, with a protective cover to prevent inadvertent contact and shall only be reset by a key located on premises accessible to authorized personnel. Installation of emergency disconnect switches shall comply with NFPA 70 (NEC). Emergency disconnects shall be located within 100 feet (30480 mm) of but not less than 20 feet (6096 mm) from, the fuel dispensers. All emergency disconnect switches shall be distinctly labeled as "**EMERGENCY FUEL SHUTOFF**." Signs shall be provided in *approved* locations.

CHAPTER 24
FLAMMABLE FINISHES

SECTION 2401
GENERAL

Section 2401.1 Scope, Item 4, is replaced as follows:

4. Floor surfacing or finishing operations using Class I or II liquids

Section 2401.3.1 Water-based finishes is added as follows:

2401.3.1 Water-based finishes. Notwithstanding the provisions of Section 2401.2, a permit is required to conduct a spraying or dipping operation utilizing water-based liquids as set forth in Section 105.

SECTION 2404
SPRAY FINISHING

Section 2404.6.1.2.1 Interlocks Item 3 is replaced as follows:

3. Have the ventilating system maintain a concentration 25 percent below the lower flammable limit (LFL) within the spray booth or spray room during the drying process and automatically shut off drying apparatus in the event of a failure of the ventilating system.

SECTION 2405
DIPPING OPERATIONS

Section 2405.7 Ventilation is replaced follows:

2405.7 Ventilation of flammable vapor areas. Mechanical ventilation shall be provided to maintain airborne concentrations below 25 percent the lower flammability limit (LFL). Required ventilation systems shall be arranged such that the failure of any ventilating fan shall automatically stop the dipping conveyor system.

SECTION 2410
FLOOR SURFACING AND FINISHING OPERATIONS

Section 2410.1 Scope is replaced as follows:

2410.1 Scope. Floor surfacing and finishing operations using Class I or Class II liquids shall comply with Sections 2410.2 through 2410.5.

CHAPTER 25
FRUIT AND CROP RIPENING

SECTION 2503
ETHYLENE GAS

Sections 2503.3 Storage and 2503.4 Piping are added as follows:

2503.3 Storage. Containers other than those connected for use shall be stored outside of ripening process buildings or in a special building.

Exception: Storage of not more than two portable containers complying with Section 5303.1 and *approved* for transportation is allowed in ripening process buildings.

2503.4 Piping. Piping containing ethylene shall be constructed of iron. Flexible connectors and hose, when used, shall be of an *approved* type. Tubing shall be of brass, copper, or stainless steel with not less than 0.049-inch (1.2 mm) wall thickness.

CHAPTER 26
FUMIGATION AND INSECTICIDAL FOGGING

SECTION 2601
GENERAL

Section 2601.2 Permits is replaced as follows:

2601.2 Permits. No person shall engage in the actual operation of fumigation or thermal insecticidal fogging without first obtaining a permit. No fumigation room, vault, or chamber using toxic or flammable fumigant shall be used or maintained without first obtaining a permit. Permits shall be required as set forth in Section 105.

Section 2601.3 License is added as follows:

2601.3 License. No person shall conduct fumigation or insecticidal operations without first obtaining a license from the City and County of Denver Department of Excise and Licenses as required by the Revised Municipal Code.

SECTION 2603
FIRE SAFETY REQUIREMENTS

Section 2603.1.1 Storage warning signs is added as follows:

2603.1.1 Storage warning signs. Where fumigants and insecticidal fogging products are stored NFPA 704 placard guidelines shall be followed.

Section 2603.3.1 Warning signs is amended by adding the following after the first sentence:

Where fumigants and insecticidal fogging products are used, *approved* warning signs bearing the "skull and crossbones" emblem with the warning "**DANGER! POISON GAS! KEEP OUT!**" shall be posted.

Section 2603.3.1.1 Storage warning signs is added as follows:

2603.3.1.1 Storage warning signs. Where fumigants and insecticidal fogging products are stored, NFPA 704 placard guidelines shall be followed.

Section 2603.8 Fumigations restricted is added as follows:

2603.8 Fumigations restricted. Heated elemental sulfur processes creating sulfur dioxide shall be prohibited.

CHAPTER 27
SEMICONDUCTOR FABRICATION FACILITIES

SECTION 2703
GENERAL SAFETY PROVISIONS

Section 2703.12.1 Where required is replaced as follows:

2703.12.1 Where required. Emergency alarm systems shall be provided in accordance with Section 908.8 in the areas indicated in 2703.12.1.1 through 2703.12.1.3.

Section 2703.12.3.1 Emergency alarm signage is added as follows:

2703.12.3.1 Emergency alarm signage. Signage required by Section 908.4 shall state,

Outside the room: "**DO NOT ENTER WHEN LIGHT IS FLASHING – HAZARDOUS PRODUCTION MATERIAL SPILL DETECTED**."

Inside the room: "**FLASHING LIGHT MEANS HAZARDOUS PRODUCTION MATERIAL SPILL DETECTED – EVACUATE ROOM AND BUILDING."**

Section 2703.13.2.1.1 Emergency alarm signage is added as follows:

2703.13.2.1.1 Emergency alarm signage. Signage required by Section 916 shall state,

Outside the room: "**DO NOT ENTER WHEN LIGHT IS FLASHING – HAZARDOUS PRODUCTION MATERIAL SPILL DETECTED**."

Inside the room: "**FLASHING LIGHT MEANS HAZARDOUS PRODUCTION MATERIAL SPILL DETECTED – EVACUATE ROOM AND BUILDING."**

CHAPTER 28
LUMBER YARDS AND AGRO-INDUSTRIAL, SOLID BIOMASS AND WOODWORKING FACILITIES

SECTION 2804
FIRE PROTECTION

Section 2804.3 Portable fire extinguishers or standpipes and hose is replaced as follows:

2804.3 Portable fire extinguishers and standpipes. Portable fire extinguishers or standpipes supplied from an *approved* water system shall be provided within 50 feet (15240 mm) of travel distance to any machine producing shavings or sawdust. Extinguishers shall be provided in accordance with Section 906 for extra-high hazards.

SECTION 2809
EXTERIOR STORAGE OF FINISHED LUMBER AND SOLID BIOFUEL PRODUCTS

Section 2809.5 Fire protection is replaced as follows:

2809.5 Fire protection. An *approved* hydrant and portable fire-extinguishing equipment suitable for the fire hazard involved shall be provided for open storage yards. Hydrant systems shall be installed in accordance with NFPA 24. Portable fire extinguishers complying with Section 906. shall be located so that the travel distance to the nearest unit does not exceed 75 feet (22,860 mm). Portable fire extinguishers located in open storage yards shall be protected from weather and shall be maintained in accordance with NFPA 10. Portable fire extinguishers complying with Section 906. and with a minimum rating of 4-A:40-B:C shall be provided on all vehicles operating in a lumber storage yard.

CHAPTER 30
INDUSTRIAL OVENS

SECTION 3003
LOCATION

Section 3003.5 Location is added as follows:

3003.5 Location. Ovens, oven heaters and related equipment shall be located at the following:

1. Ovens shall be located at or above grade.

   Exception: Ovens shall be permitted in basements where at least 50 percent of the wall area of the room in which the oven is located is above grade.

2. Ovens shall be located to be readily accessible for inspection and maintenance and with adequate clearances to permit the proper functioning of explosion vents.

Section 3003.6 Relief (explosion) vents is added as follows:

3003.6 Relief (explosion) vents. Ovens which may contain flammable air-gas mixtures shall be equipped with relief vents for freely relieving internal explosion pressures.

Section 3003.7 Ductwork is added as follows:

3003.7 Ductwork. All ductwork shall be constructed of *approved* non-combustible material. Ducts shall be made tight throughout and shall have no openings other than those required for the proper operation and maintenance of the system. Ducts passing through combustible walls, ceilings, floors or roofs shall provide adequate insulation and clearances to prevent surface temperatures from exceeding 160 degrees F. Exhaust ducts shall not discharge within 10 feet of doors, windows or other air intakes in a manner that will permit re-entry of vapors into the building.

CHAPTER 31
TENTS AND OTHER MEMBRANE STRUCTURES

SECTION 3103
TEMPORARY TENTS AND MEMBRANE STRUCTURES

Section 3103.2-Approval required is replaced as follows:

3103.2 Approval required. Tents and membrane structures having an area in excess of 200 square feet shall not be erected, operated, or maintained for any purpose without first obtaining an operational permit (greater than or equal to 400 square feet require a construction permit) and approval from the *fire code official* in accordance with Section 105.

Exceptions:

1. Tents used exclusively for recreational camping purposes.
2. Tents open on all sides that comply with all of the following:
   - 2.1 Individual tents having a maximum size of 400 square feet (65 m^2).
   - 2.2 The aggregate area of multiple tents placed side by side without a fire break clearance of 12 feet (3658 mm), not exceeding 400 square feet (37 m^2) total.
   - 2.3 A minimum clearance of 12 feet (3658 mm) to all structures and other tents.

Section 3103.9 Structural stability and anchorage required is amended by replacing the last sentence as follows:

Documentation of structural stability in accordance with Section 3102.7 of the *Denver Commercial Building Code* shall be furnished to the *fire code official* on request.

SECTION 3107
OPERATIONAL REQUIREMENTS

Section 3107.17 Standby personnel is replaced as follows but subsections remain:

3107.17 Standby personnel. When it is essential for public safety in a tent, or membrane structure used as a place of assembly or any other use where people congregate, because of the number of persons, or the nature of the performance, exhibition, display, contest, or activity, or when potentially hazardous conditions exist, or there is a reduction in a life safety feature, or there is an impairment to a fire protection feature, the *fire code official* is authorized to require the owner, agency, or lessee to employ and compensate through Department of Public Safety channels, at a rate established by the Executive Director of the Department of Public Safety, one or more firefighters of the City and County of Denver.

Section 3107.17.3 Permit required is added as follows:

3107.17.3 Permit required. A fire watch operational permit shall be acquired in accordance with Section 105 prior to any occupancy of the tent or membrane structure.

CHAPTER 32
HIGH-PILED COMBUSTIBLE STORAGE

SECTION 3201
GENERAL

Section 3201.3 Construction documents is replaced as follows:

3201.3 Construction documents. A construction permit shall be required in accordance with Section 105 for the installation or reconfiguration of all high-piled storage systems. Installation plans and specifications shall be submitted for review and approval and shall include the information specified in Appendix O. *Approved* plans shall be maintained on the premises in an *approved* location and available to Fire Department personnel upon request.

SECTION 3206
GENERAL FIRE PROTECTION AND LIFE SAFETY FEATURES

Table 3206.2 General Fire Protection and Life Safety Requirements is replaced as follows:

TABLE 3206.2
GENERAL FIRE PROTECTION AND LIFE SAFETY REQUIREMENTS

COMMODITY CLASS	SIZE OF HIGH-PILED STORAGE AREA [a] (square feet) (see Sections 3206.2 and 3206.4)	ALL STORAGE AREAS (See Sections 3206, 3207, and 3208) [b]			SOLID-PILED STORAGE, SHELF STORAGE AND PALLETIZED STORAGE (See Section 3207.3)		
		Automatic fire-extinguishing system (see Section 3206.4)	Building Access (see Section 3206.6)	Smoke and heat removal (see Section 3206.8)	Maximum pile dimension [c] (feet)	Maximum permissible storage height [d] (feet)	Maximum pile volume (cubic feet)
I-IV	0-500	Not Required [a]	Not Required [e]	Not Required	Not Required	Not Required	Not Required
	501-2,500	Yes [a,i]	Not Required [e]	Not Required	100	40	100,000
	2,501-12,000	Yes	Not Required [e]	Not Required	100	40	400,000
	12,001-20,000	Yes	Yes	Yes [j]	100	40	400,000
	20,001-500,000	Yes	Yes	Yes [j]	100	40	400,000
	Greater than 500,000 [g]	Yes	Yes	Yes [j]	100	40	400,000

High hazard	0-500	Not Required [a]	Not Required [e]	Not Required	50	Not Required	Not Required
	501-2,500	Yes	Not Required [e]	Not Required	50	30	75,000
	2,501-300,000	Yes	Yes	Yes [j]	50	30	75,000
	300,001-500,000 [g, h]	Yes	Yes	Yes [j]	50	30	75000

For SI: 1 foot = 304.8mm, 1 cubic foot = 0.02832m^3, 1 square foot = 0.0929m^2

a. When automatic sprinklers are required for reasons other than those in Chapter 32, the portion of the sprinkler system protecting the high-piled storage area shall be designed and installed in accordance with Sections 3207 and 3208.
b. For aisles, see Section 3206.10.
c. Piles shall be separated by aisled complying with Section 3206.10.
d. For storage in excess of the height indicated, special fire protection shall be provided in accordance with Note g where required by the fire code official. See Chapters 51 and 57 for special limitations for aerosols and flammable and combustible liquids, respectively.
e. Section 503 shall apply for fire apparatus access.
f. Intentionally deleted.
g. Special fire protection provisions including, but not limited to, fire protection of exposed steel columns; increased sprinkler density; additional in-rack sprinklers, without associated reductions in ceiling sprinkler density; or additional fire department hose connections shall be provided when required by the fire code official.
h. High-piled storage areas shall not exceed 500,000 square feet. A 2-hour fire wall constructed in accordance with Section 706 of the *Denver Commercial Building Code* shall be used to divide high-piled storage exceeding 500,000 square feet in area.
i. Sprinkler protection is not required for storage of Class I commodities. Sprinkler protection in accordance with NFPA 13 or automatic fire detection shall be provided in accordance with Section 3206.5 for Class II, III and IV commodities.
j. Not required where storage areas are protected by early suppression fast response (ESFR) sprinkler systems or control mode special application sprinklers with a response time index of 50 (m s) one half or less that are listed to control a fire in the stored commodities with 12 or fewer sprinklers and installed in accordance with NFPA 13.

Section 3206.7.5 Number of doors required - Exception is replaced as follows:

Exception. The linear distance between adjacent access doors is allowed to exceed 100 feet but not to exceed 200 feet in existing buildings constructed **prior to May 2011** where no change in occupancy is proposed. The number and distribution of access doors in existing buildings shall be *approved* by the *fire code official*.

Section 3206.7.5.1 Storage above doors is added as follows:

3206.7.5.1 Storage above doors. The clear height in accordance with Section 3206.10.2 shall be maintained to the access doors. No racking components shall be located in the clear height.

Exceptions:

1. Rack structure provided for lateral bracing or rack stability and not able to be utilized for storage.

2. A single 24-inch catwalk as permitted by Section 3206.10.1, Exception 1.

Section 3211 Existing Buildings is added as follows:

SECTION 3211
EXISTING BUILDINGS

3211.1 Scope - Existing buildings constructed prior to October 1990. This section is applicable to high-piled or rack storage in existing buildings as follows:

1. Any modification to the existing commodities stored in an existing tenant space where storage height is increased, or classification of the commodities is placed in a higher category in accordance with Section 3203.
2. New tenant spaces in existing buildings.
3. Existing tenant spaces with new tenants.

Exception: Buildings that were built and occupied by a tenant with high-piled combustible stock prior to the adoption of the Uniform Codes on **October 1, 1990**; as long as that tenant remains in operation.

3211.2 Storage of Class I commodity – as defined by NFPA 13.

3211.2.1 Automatic sprinklers. Where an automatic sprinkler system is required by Table 3206.2, an *approved* automatic sprinkler system shall be provided in accordance with NFPA 13.

Exception: Existing automatic sprinkler systems shall be accepted provided that the system has been certified by a qualified Colorado professional engineer to provide a minimum design density to a minimum of 70 percent of that required by NFPA 13 but not less .2 gpm over 2,000 square feet. Density reductions or adjustments permitted by NFPA 13 shall not apply for determination of the 70 percent minimum density.

3211.2.2 Building access. Building access from fire apparatus access roads in accordance with Section 503 shall be provided within 200 feet of all portions of the exterior walls of a building used for high-piled storage.

3211.2.2.1 Access doors. Fire Department access doors shall be provided in accordance with Section 3206.7.1.

3211.2.3 Aisles. Aisles shall be provided in accordance with Section 3206.10 or NFPA 13.

3211.2.4 Portable fire extinguishers. Portable fire extinguishers shall be provided in accordance with Section 3206.11.

3211.3 Storage of Class II and III commodity - as defined by NFPA 13.

3211.3.1 Automatic sprinklers. Where an automatic sprinkler system is required by Table 3206.2, an *approved* automatic sprinkler system shall be provided in accordance with NFPA 13.

Exception: Existing automatic sprinkler systems shall be accepted provided that the system has been certified by a qualified Colorado professional engineer to provide a minimum design density to a minimum of 70 percent of that required by NFPA 13, but not less .2 gpm over 2,000 square feet. Density reductions or adjustments permitted by NFPA 13 shall not apply for determination of the 70 percent minimum density.

3211.3.2 Building access. Building access from fire apparatus access roads in accordance with Section 503 shall be provided within 200 feet of all portions of the exterior walls of a building used for high-piled storage.

3211.3.2.1 Access doors. Fire Department access doors shall be provided in accordance with Section 3206.7.

3211.3.3 Smoke and heat removal. Smoke and heat vents shall be provided in accordance with Table 3206.2 with a minimum vent area of 1:200.

Exceptions: Existing roof openings such as skylights may be used as smoke vents in accordance with Section 1108 - Item 4.

3211.3.4 Aisles. Aisles shall be provided in accordance with Section 3206.10 or 903.3.1.

3211.3.5 Portable fire extinguishers. Portable fire extinguishers hall be provided in accordance with Section 3206.11.

3211.4 Storage of Class IV, high-hazards and plastics commodities - as defined by NFPA 13.

3211.4.1 Automatic sprinklers. Where an automatic sprinkler system is required by Table 3206.2, an *approved* automatic sprinkler system shall be provided in accordance with NFPA 13.

3211.4.2 Building access. Building access from fire apparatus access roads in accordance with Section 503 shall be provided within 150 feet of all portions of the exterior walls of building used for high-piled storage.

3211.4.2.1 Access doors. Fire Department access doors shall be provided in accordance with Section 3206.7.

3211.4.3 Smoke and heat removal. Smoke and heat vents shall be provided in accordance with Table 3206.2 with a minimum vent to floor area ratio of 1:200.

3211.4.4 Aisles. Aisles shall be provided in accordance with Section 3206.10.

3211.4.5 Portable fire extinguishers. Portable fire extinguishers shall be provided in accordance with Section 3206.11.

CHAPTER 33
FIRE SAFETY DURING CONSTRUCTION AND DEMOLITION

SECTION 3301
GENERAL

Section 3301.3 Permit required is added as follows:

3301.3 Permit required. Permits shall be required as set forth in Section 105 for the activities or uses regulated by Sections 3303 – Temporary Heating Equipment, 3304.3 – Burning of combustible debris, rubbish and waste, 3304.4 - Open Burning, 3304.5 – Fire Watch, 3304.6 – Cutting and Welding, 3305.1 Storage of Flammable and Combustible Liquids, 3305.2–Class I and Class II Liquids, 3306.1 – Storage and Handling (Flammable Gases), 3307.1 – Storage and Handling (Explosive Materials), 3317- Safeguarding Roofing Operations, and 3318 – Asbestos Operations.

SECTION 3303
OWNER'S RESPONSIBILITY FOR FIRE PROTECTION

Section 3303.5 Fire safety requirements for buildings of Types IV-A, IV-B and IV-C construction is amended by replacing the exception to requirement 3 as follows:

Exceptions:

1. Shafts and vertical exit enclosures shall not be considered part of the active mass timber construction.

2. Noncombustible material on the top of mass timber floor assemblies shall not be required before erecting additional floor levels.

SECTION 3307
FLAMMABLE GASES

Section 3307.2.1 Pipe cleaning and purging add exception 4 as follows:

Exceptions:

4. Cleaning and purging of refrigerant piping systems shall comply with the Denver Mechanical Code.

SECTION 3312
MEANS OF EGRESS

Section 3312.1 Stairways required is amended as follows:

3312.1 Stairways required. Where a building has been constructed to a building height of 40 feet (15 240 mm) or four stories, or where an existing building exceeding 40 feet (15 240 mm) in building height is altered, not less than one temporary lighted stairway shall be provided unless one or more of the permanent stairways are erected as the construction progresses.

SECTION 3314
STANDPIPES

Section 3314.1 Where required is replaced as follows:

3314.1 Where required. Buildings four or more stories in height shall be provided with not less than one standpipe for use during construction. Such standpipes shall be installed when the progress of construction is not more than 30 feet in height above the lowest level of fire department vehicle access or where the floor level of the lowest story is located more than 30 feet below the highest level of fire department vehicle access. Such standpipes shall be provided with fire department hose connections at accessible locations adjacent to usable stairs. Such standpipes shall be extended as construction progresses to within one floor of the highest point of construction having secured decking or flooring. One fire department connection [not less than two 2.5-inch inlets with 4-inch piping] shall be provided for buildings less than 200 feet in height. Where building exceeds 200 feet in height, two separate 6-inch manual dry standpipes shall be required. These standpipes shall be located adjacent to a usable stair with a 200 feet maximum separation between standpipes. Each standpipe shall be connected to two 2.5-inch inlet fire department connections. Each fire department connection shall be signed indicating which standpipe it serves. The fire department connection(s) shall be provided in accordance with Section 912 at a location visible from the public way, accessible to fire apparatus and approved by Denver Fire Prevention personnel.

Section 3319 Asbestos Operations is added as follows:

SECTION 3319
ASBESTOS OPERATIONS

3319.1 General. Operations involving asbestos or asbestos-containing materials in buildings and other structures regulated by this code shall be conducted in accordance with this Section.

3319.2 Notification. The *fire code official* shall be notified 24 hours prior to the commencement and closure of asbestos operations. The permit applicant shall notify the *building official* when asbestos abatement involves the removal of materials which were used as a feature of the building's fire resistance.

3319.3 Signs. *Approved* signs shall be posted at the entrance, exit, decontamination areas and waste-disposal areas for asbestos operations. The signs shall state asbestos abatement operations are in progress in the area, asbestos is a suspected carcinogen and proper respiratory protection is required. Signs shall have a reflective surface and lettering shall be a minimum of two inches (51 mm) in height.

CHAPTER 34
TIRE REBUILDING AND TIRE STORAGE

SECTION 3401
GENERAL
Section 3401.3 Waste Tire Facilities/Operations is added as follows:

3401.3 Waste tire facilities or operations shall comply with Colorado Revised Statute (CRS) 30-20-1401 as administered by the Division of Fire Prevention & Control.

SECTION 3405
OUTDOOR STORAGE

Section 3405.4 Distance from lot lines and buildings is amended by deleting the section in its entirety and replacing it as follows:

3405.4 Distance from lot lines and buildings. Tire storage piles shall be located not less than 50 feet (15 240 mm) from *lot lines* and buildings where outdoor storage is in excess of 5,000 square feet (464.5 square meters).

Exceptions:

1. Tire storage piles shall be located at least 10 feet (3048 mm) from *lot lines* and *buildings* if storage is no higher than six feet (1836 mm) and storage is equal to or less than 5,000 square feet (464.5 square meters).

2. Storage heights from six feet (1836 mm) to 10 feet (3048 mm) shall be no closer to *lot lines* and *buildings* than 20 feet (6096 mm) and storage is equal to or less than 5,000 square feet (464.5 square meters).

SECTION 3408
FIRE PROTECTION

Section 3408.3 Automatic sprinkler systems is added as follows:

3408.3 Automatic sprinkler systems. Automatic sprinkler systems shall be installed in accordance with Section 903.2.9.2.

CHAPTER 35
WELDING AND OTHER HOT WORK

SECTION 3501
GENERAL

Section 3501.3 Restricted areas is amended by adding Item 6 as follows:

6. Areas where uncleaned or improperly prepared drums, tanks, or other containers and equipment that have previously contained materials that could develop explosive atmospheres.

SECTION 3505
GAS WELDING AND CUTTING

Section 3505.2 Cylinder and container storage, handling and use is replaced as follows:

3505.2 Cylinder and container storage, handling and use. Storage, handling and use of compressed gas cylinders, containers and tanks shall be conducted in accordance with this section and Chapter 53. Ordinary rope slings or electromagnets shall not be used.

SECTION 3508
ACETYLENE GENERATORS

Section 3508.1 Use of acetylene generators is replaced as follows:

3508.1 Use of acetylene generators. The use of acetylene generators shall comply with this Section and NFPA 51 and 51A.

Chapter 39 Processing and extraction facilities is replaced in its entirety as follows:

CHAPTER 39
MARIJUANA OPERATIONS

SECTION 3901
GENERAL

3901.1 Scope. This section shall apply to all occupancies engaging in marijuana (i.e. cannabis and extract derivatives) sales, growing, processing, extraction, and/or testing. These occupancies shall comply with this chapter and other applicable provisions of this code.

3901.2 Permits. Permits shall be required as set forth in Section 105

3903.3 Existing operations. Existing buildings or facilities used for the growing or processing of marijuana shall comply with this chapter. Existing extraction processes where the medium of extraction or solvent is changed shall comply with this chapter.

SECTION 3902
DEFINITIONS

3902.1 Definitions. The following terms are defined in Chapter 2.

CHEMICAL FUME HOOD

EXTRACTION

POST OIL PROCESSING

SECTION 3903
EXTRACTION OPERATIONS

3903.1 Construction Requirements.

3903.1.1 Location. Extraction processes shall be performed in a room dedicated to the extraction process. Extraction processes utilizing *flammable liquefied gas* shall not be located in any building containing Group A, E, I, or R occupancies.

3903.1.2 Egress. Exit doors from extraction rooms utilizing hazardous materials shall swing in the direction of egress and be self-closing. Panic hardware shall be provided on doors in liquefied petroleum gas (LPG) extraction rooms. Where latching door hardware is provided on extraction rooms utilizing hazardous materials, panic hardware shall be provided.

3903.1.3 Extraction Rooms. Extraction room shall be fully enclosed. The floor, ceiling, and walls of extraction rooms shall be constructed in accordance with the Denver Building Code and be continuous, non-combustible, and smooth. Rooms designed in accordance with Section 3903.4.1.1 shall be constructed to permit the free passage of exhaust air from all parts of the room.

Exceptions:

1. Enclosed booths constructed in accordance with Section 2404.3.3.1 through 2404.3.3.3.

2. CO_2 extraction rooms and extraction rooms containing processes not utilizing hazardous materials.

3903.1.4 Openings and penetrations. Openings and penetrations into extraction rooms utilizing hazardous materials shall only be provided for egress, mechanical, electrical, or plumbing systems serving the extraction room. Penetrations into LPG extraction rooms shall be sealed vapor tight. Non-operable glazing is permitted where glazing does not interfere with required exhaust systems.

3903.1.5 Extraction room illumination. Luminaires inside the extraction room shall comply with Section 3903.2.2. Luminaires attached to the walls or ceilings of an extraction room or booth, but outside of any classified area and separated from the flammable vapor areas by vapor-tight glass panels, shall be suitable for use in ordinary hazard locations. Such luminaires shall be serviced from outside the flammable vapor areas.

3903.1.6 Fire protection. Extraction rooms, booths, or hoods, including ductwork where required for hazardous exhaust systems, shall be protected by an *approved* automatic fire extinguishing system complying with Chapter 9 where any of the following exist:

1) Extraction processes utilizing LPG or off gassing LPG from spent plant material or oil

2) Vapors are released exceeding 25 percent of the lower flammable limit from flammable liquid extraction processes or flammable liquid post oil processing.

3903.2 Sources of ignition. Extraction or post oil processing operations which use flammable liquids or liquefied petroleum gas (LPG) shall comply with Sections 3903.2.1 through 3903.2.3.

3903.2.1 Open flame and sparks. Smoking, open flames, direct fired heating devices, etc. shall be prohibited in areas where flammable vapors exist.

3903.2.2 Electrical equipment. Electrical equipment installed in rooms designed in accordance with Section 3903.4.1.1, hoods, or booths containing LPG extraction processes shall be in accordance with NFPA 70 (NEC) as a Class I Division I location. Areas adjacent to classified locations shall be in accordance with NFPA 70 (NEC). Electrical equipment installed in areas of flammable liquid extractions or post oil processing shall be in accordance with Chapter 50, and NFPA 70 (NEC).

Exception: Subject to approval of the *fire code official*, rooms or booths containing LPG extraction equipment that is not normally opened within the room or booth for oil or plant material retrieval, and frequent leakage in the closed system does not occur, may be considered a Class I Division II location.

3903.2.3 Grounding and Bonding. LPG extraction rooms must use static bonding and grounding of extraction equipment, ducts, and piping etc. installed in accordance with NFPA 70 (NEC).

3903.3 Equipment. Extraction process equipment utilizing hazardous materials shall be listed or *approved*.

3903.4 Exhaust required. Extraction and post oil processing, utilizing LPG or flammable liquids shall be provided with an exhaust system in accordance with Section 3903.4.1 or 3903.4.2. The exhaust system shall be in operation at all times when extractions or post oil processing is being performed and until LPG is off gassed from oil and/or plant material removed from LPG extraction equipment. Fans shall be of the type approved for use when flammable or explosive vapors are present in accordance with the *Denver Mechanical Code,* Section 503. Capture and containment air velocity shall be provided across booths, hoods, or exhausted enclosures to capture and convey emissions to the exhaust system and shall be no less than 75 fpm.

3903.4.1 Exhaust for LPG extraction processes. A hazardous exhaust system engineered in accordance with the *Denver Building Code* or this code shall be provided for LPG extraction processes including LPG degassing from processed plant material or oil removed from extraction equipment.

3903.4.1.1 Exhausted enclosure. Where the extraction room is used as the exhausted enclosure, the exhaust system shall be designed to provide capture and containment air velocity across all areas of the enclosure.

3903.4.1.2 Electrical Interlocks. The exhaust system shall be interlocked with the room power, such that when the exhaust system is not operating, power and lighting will be disabled.

3903.4.2 Exhaust for Flammable Liquid Extraction processes. A hazardous exhaust system in accordance with the *Denver Building Code or Denver* or this code shall be provided for flammable liquid extraction processes.

Exceptions:

1. Distillation process with less than 5 gallons of flammable liquid performed under a chemical fume hood installed in accordance with the *Denver Building Code* or this code unless a hazardous exhaust system is required by the *Denver Building Code* or this code.
2. Solvent distillation units in compliance with Section 5705.4.
3. Extractions performed in accordance with Denver Ordinance No. 629-14, § 1, 11-10-14

3903.5 Gas Detection. A continuous gas detection system complying with Section 916 shall be provided within rooms, booths or hoods, containing CO_2 or LPG extraction processes. Actuation of the gas detection system shall initiate a local alarm within the room. CO2 gas detection systems shall alarm at 5000ppm. LPG gas detection systems shall alarm at no greater than 25 percent of the LFL. Portable LPG gas detection shall be utilized by the extraction system operator to verify local hydrocarbon levels, including system leaks.

3903.6 CO_2 Extraction Equipment Process discharge. CO_2 discharges shall be piped to the exterior.

3903.7 Refrigeration and Cooling Equipment. Refrigerators, freezers, and other cooling equipment used to store, or process flammable liquids shall be in accordance with NFPA 45 and applicable provisions of the *Denver Building Code* or this code.

3903.8 Stand-by power systems. For new or modified hazardous exhaust systems, a stand-by power system complying with Chapter 12, shall be provided for the following items, when installed:

1. Extraction room lighting
2. Extraction room ventilation system
3. Solvent gas detection system

Exception: Stand-by power shall not be required where it can be shown by engineering analysis that the hazardous process conducted will not create hazardous conditions when normal power is lost.

Section 3904 Marijuana growing operations is added as follows:

SECTION 3904
MARIJUANA GROWING OPERATIONS

3904.1 CO_2 Enrichment Systems. CO_2 enrichment systems shall comply with Section 5307.4 or 5307.5 as applicable.

3904.2 Vertical growing systems. Vertical growing systems, racks, and shelves where the top of the plants or lighting is greater than 12 feet in height shall be in accordance with Chapter 32 as a commodity classification. The amount of plastic utilized in grow containers and irrigation components shall be accounted for in the commodity analysis for determining the hazard classification.

Chapter 40 Storage of distilled spirits and wines is deleted in its entirety and replaced as follows:

CHAPTER 40
ALCOHOL BEVERAGE PRODUCTION FACILITIES

SECTION 4001
GENERAL

4001.1 Scope. Buildings and portions thereof where ethanol mixtures are produced, stored, handled, or dispensed in the production of alcohol beverages shall be regulated in accordance with this Chapter and this code.

Unless otherwise noted, where provisions in this chapter conflict with provisions in other sections of the *Denver Building Code* and this code for ABPFs, the provisions of this chapter shall supersede the provisions in those sections.

4001.2 Referenced standards. The fire code official is authorized to enforce applicable provisions of the standards listed in Chapter 80 of the *Denver Fire Code* to ensure the safe operation of ABPFs. Table 4001.2 lists the standards most often utilized for ABPFs.

TABLE 4001.2

REFERENCED STANDARDS

DOCUMENT	TITLE
NFPA 13	Standard for the Installation of Sprinkler Systems
NFPA 30	Flammable and Combustible Liquids Code
NFPA 61	Standard for the Prevention of Fires and Dust Explosions in Agricultural and Food Processing Facilities
NFPA 69	Standard on Explosion Prevention Systems
NFPA 70	National Electrical Code (NEC)
NFPA 72	National Fire Alarm and Signaling Code
NFPA 505	Fire Safety Standard for Powered Industrial Trucks Including Type Designations, Areas of Use, Conversions, Maintenance, and Operations
NFPA 704	Standard System for Identification of Hazards of Materials for Emergency Response
NFPA 780	Standard for the Installation of Lightning Protection Systems

4001.3 Recommended practices. The *fire code official* and *building official* shall have the authority to utilize the recommended practices and data sheet listed in Table 4001.3 to render interpretations and develop policies and procedures in the application of the provisions of the *Denver Building Code and Denver Fire Code* and referenced standards. Such interpretations, policies, and procedures shall be in compliance with the intent and objective of this chapter.

TABLE 4001.3

RECOMMENDED PRACTICES

NFPA 77	Recommended Practice on Static Electricity
NFPA 497	Recommended Practice for the Classification of Flammable Liquids, Gases, or Vapors and of Hazardous (Classified) Locations for Electrical Installations in Chemical Process Areas
NFPA 499	Recommended Practice for the Classification of Combustible Dusts and of Hazardous Locations for Electrical Installations in Chemical Process Areas
FM Global Property Loss Prevention Data Sheet 7-29	Ignitable Liquid Storage in Portable Containers
The Distilled Spirits Council of the United States, Inc.	Recommended Fire Protection Practices for Distilled Spirits Beverage Facilities

4001.4 Construction Documents. Construction documents shall be submitted for review and permit prior to the installation, construction, or modification of ABPFs or the operational and storage equipment therein.

4001.5 Operational Permits. Operational permits shall be required as set forth in Section 105.

SECTION 4002
DEFINITIONS, ACRONYMS AND ABBREVIATIONS

4002.1 Definitions. The following terms are defined in Chapter 2.

ALCOHOL BEVERAGE

ALCOHOL BEVERAGE PRODUCTION FACILITY (*ABPF)*

ALCOHOL BY VOLUME (*ABV*)

BEVERAGE SPIRIT

BREWERY

BULK STORAGE FOR DISTILLING

CASK

CLASS 1 LIQUIDS

CONTAINER

DENVER BUILDING CODE

DISTILLATION

ETHANOL (ALSO, “ETHYL ALCOHOL” OR “GRAIN ALCOHOL”)

ETHANOL MIXTURE

FERMENTATION

HAZMAT

HAZMAT INVENTORY STATEMENT (HMIS)

HAZMAT MANAGEMENT PLAN (HMMP)

HAZMAT REPORT (HMR)

INTERMEDIATE BULK CONTAINER

LOWER FLAMMABLE LIMIT (LFL)

MASH

MINIMUM EXPLOSIVE CONCENTRATION (MEC)

NORMALLY CLOSED

NORMALLY OPEN

PILE

PORTABLE TANK

PROCESS DESCRIPTION

PRESSURE VESSEL

PROCESSING VESSEL

RACK

REMOTE AREA (c.f., NFPA 13)

SPIRIT

STATIONARY TANK

STILL

STORAGE AREA

TANK

USE AREA

VAT (ALSO FOUDRE)

VESSEL

WASH (ALSO BEER, MALT LIQUOR)

WINE

WINERY

WORT

4002.2 Acronyms and abbreviations. The following acronyms and abbreviations shall, for the purposes of this chapter, have the meanings identified below:

ABPF. Alcohol Beverage Production Facility.

ABV. Alcohol by Volume.

ASME. American Society of Mechanical Engineers.

ASTM. American Society for Testing and Materials.

DFD. Denver Fire Department.

HMIS. HazMat Inventory Statement.

HMMP. HazMat Management Plan.

HMPA. HazMat Permit Application.

HMR. HazMat Report.

LEL. Lower Explosive Limit.

LFL. Lower Flammable Limit.

MAQ. Maximum allowable quantity per control area in accordance with Section 5003.1.1.

MEC. Minimum Explosive Concentration.

MSDS. Material Safety Data Sheet

NEC. National Electrical Code

TTB. Alcohol and Tobacco Tax and Trade Bureau

SECTION 4003
GENERAL REQUIREMENTS

4003.1 Material classification. Hazard classifications and analyses of *ethanol mixtures* shall account for altitude-dependent properties based on an elevation of 5,280 feet (1,609 m) above sea level.

Ethanol mixtures that have no fire point when tested in accordance with ASTM D 92, *Standard Test Method for Flash and Fire Points,* by Cleveland Open Cup Tester and ethanol mixtures with 16 percent or less ABV with the remainder comprised of materials without hazards regulated by the *Denver Building Code* and this code shall not be regulated as flammable or combustible liquids.

Ethanol mixtures with greater than 16 percent ABV and less than or equal to 34 percent ABV, and the remainder comprised of water and other materials without hazards regulated by the *Denver Building Code* and this code, shall be classified as Flammable 1C liquids.

Ethanol mixtures with greater than 34 percent ABV, and the remainder comprised of water and other materials without hazards regulated by the *Denver Building Code* and this code, shall be classified as Flammable 1B liquids.

4003.2 Occupancy classification. The occupancy classification of *use areas* and *storage areas* including grain-handling and bottling/packaging systems and processes shall be classified in accordance with Sections 4003.2.1 through 4003.2.3. Quantities of *ethanol mixtures* exceeding the MAQs but packaged in individual, closed and unpressurized containers not exceeding 1.3 gallons (5 L) in volume shall not be counted towards the MAQs.

4003.2.1 H-2 occupancy classification. An H-2 occupancy classification shall be assigned to buildings or portions thereof in accordance with Sections 4003.2.1.1 and 4003.2.1.2.

4003.2.1.1 Combustible dust producing operations. ABPFs or portions thereof containing equipment, systems and processes where grains are stored, transferred or milled in such a manner that the confinement conditions and dust concentrations create a fire or explosion hazard shall be in accordance with Chapter 22. The *fire code official* is authorized to require technical assistance in accordance with Section 104 to establish whether the building or portion thereof is required to be assigned an H-2 occupancy classification and to determine explosion and deflagration hazard reduction criteria.

4003.2.1.2 Flammable liquids. ABPFs and portions thereof with quantities of *Class 1 Liquids* in excess of the MAQs, that are stored or processed in *normally open vessels* or systems, or *vessels* or in systems that are pressurized at more than 15 pounds per square inch gauge (psig; 103.4 kPa), or where a *Class 1 Liquid* is released to atmosphere at or above its flash point temperature as part of normal operations shall be assigned an H-2 occupancy classification.

4003.2.2 H-3 occupancy classification. ABPFs and portions thereof with quantities of *Class 1 Liquids* in excess of the MAQs, that are stored or processed in *normally closed vessels* or in systems pressurized to 15 pounds per square inch gauge (psig; 103.4 kPa) or less, shall be classified as H-3 occupancies.

4003.2.3 Non-high hazard occupancy classification. *Control areas* with *Class 1 Liquids*, *combustible dust* production, or other regulated hazards shall be assigned an occupancy classification in accordance with the *Denver Building* according to the fire safety and relative hazard involved.

4003.3 Hazardous materials permit application (HMPA). An HMPA in an *approved* format is required for all ABPFs using or storing *HazMat*. It shall contain at a minimum, an HMR, HMMP, process description, fire-safety and evacuation plans, and a storage plan.

4003.3.1 Hazardous materials report (HMR). An HMR in an *approved* format is required for all facilities using or storing *HazMat*. It shall contain at a minimum, critical personnel contact information, pertinent building construction and occupancy information, and an HMIS in accordance with Section 5001.5.2, Appendix H102 and DFD policy.

4003.3.2 Hazardous materials management plan (HMMP). An HMMP in accordance with Section 5001.5.1 and DFD policy shall be provided in an *approved* format.

4003.3.3 Process description. A process description shall be provided in an *approved* format. All relevant process and storage operations in all *control areas* and Group H Occupancies shall be identified. The quantities of all materials with regulated hazards in each area at each step of all processes shall be calculated. The maximum capacity of all *Class 1 Liquid bulk storage vessels for distilling*, *processing vessels* and *stills* shall be used in the quantity calculation. The capacities of all such *vessels* and *stills* that can be used simultaneously shall be counted as being simultaneously full.

4003.3.4 Emergency Planning. Fire safety and evacuation plans in accordance with Section 404 shall be prepared and maintained.

4003.3.5 Storage plan. Aisle and storage plans shall be submitted in accordance with Chapters 32 and 50.

4003.3.6 Material safety data sheets. MSDS shall be readily available on the premises for *HazMat* therein and made available to DFD inspectors upon request.

4003.3.7 Unauthorized Discharges Preparation. Plans and provisions shall be made for controlling and mitigating unauthorized discharges.

4003.3.8 Personnel training and written procedures. Persons responsible for the operations in *Class 1 Liquid* storage areas or use areas shall be familiar with the chemical nature of the materials and the appropriate mitigating actions necessary in the event of fire, leak, or spill.

4003.3.9 Fire department liaison. Responsible persons shall be designated and trained to be liaison personnel to the fire department. They shall aid the fire department in preplanning emergency responses and identifying the locations of *HazMat*, shall have access to MSDS and be knowledgeable in the site's emergency response procedures.

4003.4 Unauthorized discharges. When *Class 1 Liquids* are released in quantities reportable under state, federal or local regulations, the *fire code official* shall be notified, and action shall be taken in accordance with Sections 4003.4.1 and 4003.4.2.

4003.4.1 Records. Accurate records shall be kept of all unauthorized discharges of *Class 1 Liquids* by the permittee.

4003.4.2 Responsibility for cleanup. The person, firm, or corporation responsible for an unauthorized discharge shall institute and complete all actions necessary to remedy the effects of such unauthorized discharge, whether sudden or gradual, at no cost to the jurisdiction. When deemed necessary by the *fire code official*, cleanup may be initiated by the fire department or by an authorized individual or firm. Costs associated with such cleanup shall be borne by the owner, operator, or other person responsible for the unauthorized discharge.

4003.5 Construction. The construction of ABPFs shall be in accordance with Sections 4003.5.1 and 4003.5.2.

4003.5.1 General. Special detailed requirements, building heights, allowable areas, construction types, control areas, rated assemblies, finishes, means of egress, accessibility, interior environment, energy efficiency, exterior walls, roofing, structural design, fire service features, building services and systems, and fire and smoke protection shall be in accordance with the *Denver Building Code* and this code for the assigned occupancy classifications and this Chapter.

4003.5.2 Floors. Floors of *use areas* and *storage areas* for *Class 1 Liquids* shall be of noncombustible construction. Floor surfacing shall not be reactive with ethanol.

4003.6 Systems, features, and components. Systems, features, and components shall be provided in accordance with Sections 4003.6.1 through 4003.6.13.

4003.6.1 Deflagration prevention by combustible concentration reduction. Atmospheric concentration of *flammable vapors* shall be maintained at or below 25 percent of the LFL, and *combustible dusts* at or below 25 percent of the MEC, in all areas of the ABPF or portion thereof where they could collect or migrate. Accumulation of *combustible dust* on all exposed surfaces at all levels throughout the building is prohibited.

Indoor storage areas and use areas are permitted to be provided with natural ventilation where it can be shown to maintain the atmospheric concentrations at or below 25 percent of the LFL and MEC for the materials under consideration. This shall be confirmed by sampling the actual vapor concentration under normal operating conditions. The sampling shall be conducted throughout the enclosed storage area, extending to or toward the bottom and the top of the enclosed storage area. The vapor concentration used to determine the required ventilation rate shall be the highest measured concentration during the sampling

procedure. The sampling shall be conducted manually or by installation of a continuously monitoring flammable vapor detection system.

Where natural ventilation is not adequate, *Class 1 Liquid use areas*, *storage areas* and equipment, machinery, and operations which produce or emit *combustible dust*, shall be provided with an *approved* mechanical collection and exhaust system in accordance with Sections 501, 502.1, 502.8, 502.9.5 and 503 of the *Denver Mechanical Code*.

Use areas and *storage areas* in ABPFs or portions thereof where *Class 1 Liquid* vapor concentrations cannot be maintained at or below 25 percent of the LFL, or confined enclosures where the concentration of *combustible dust* cannot be maintained at or below 25 percent of the MEC, shall be provided hazardous exhaust in accordance with Sections 510 and 511 of the *Denver Mechanical Code*.

4003.6.1.1 System requirements. Exhaust ventilation systems shall comply with all of the following:

1. Installation shall be in accordance with the *Denver Mechanical Code.*

2. Mechanical ventilation over the *storage area* or *use area* shall be at a rate of not less than 1 cubic foot per minute per square foot (cfm/ft^2; 0.00508 cms/m^2) of floor area.

   Exception: Areas where *Class 1 Liquids* are stored in casks are permitted to be provided with an engineered ventilation system in accordance with Chapter 4 of the *Denver Mechanical Code*. The air flow rate shall not be less than the greater of (1) that required to maintain the flammable vapor concentration in the storage area at or below 25 percent of the LFL, or (2) 0.06 cubic feet per minute per square foot (cfm/ft^2; 0.000305 cms/m^2).

4. Systems shall operate continuously.

   Exception: An approved engineered design alternative.

4. A manual shutoff control shall be provided outside of the room in a position adjacent to the access door to the room, or in an *approved* location. The switch shall be a break-glass or other *approved* type and shall be labeled, "**VENTILATION SYSTEM EMERGENCY SHUTOFF**."

5. Exhaust ventilation shall be designed to consider the density of the material released. For *ethanol* vapor, inlet air shall be introduced, and exhaust shall be taken, from a point within 12 inches (305 mm) of the floor. For dust, inlet air shall be introduced at a point within 12 inches (305 mm) of the floor and exhaust shall be taken as close to the dust generation source as possible.

6. The location and configuration of both the inlet and exhaust air openings shall be designed to provide air movement across all portions of the floor or room to prevent the accumulation of *flammable vapors* and suspended *combustible dust*.

7. Exhaust air shall not be recirculated to occupied areas.

4003.6.2 Spill control and secondary containment. Spill control and secondary containment shall be provided in accordance with Sections 4003.6.2.1 through 4003.6.2.2.

4003.6.2.1 Indoor. Spill control and secondary containment shall be provided for H-2 and H-3 occupancies in ABPFs where:

1. The capacity of any single *vessel* or system holding *Class 1 Liquids* exceeds 55 gallons (208 L);

2. The aggregate capacity of multiple *vessels* or systems holding *Class 1 Liquids* exceeds 1,000 gallons (3,785 L); or

3. *Class 1 Liquids* are dispensed into or from a *normally open vessel* or system exceeding a 5.3-gallon (20 L) capacity.

4003.6.2.1.1 Design. The drainage system shall be in accordance with the *Denver Plumbing Code* and the following:

1. All portions of the drainage system including floors shall be liquid-tight and constructed of noncombustible materials compatible with *ethanol*.

   Exception: Where *approved* by the *fire code official* , and in compliance with federal, state, and local government agencies' regulations and permits, floors of buildings or portions thereof used for the *bulk storage* of *Class 1 Liquids* for distilling are permitted to be exposed earth. Combustible materials such as tilled organic matter are permitted to be mixed with dirt provided the mixture is noncombustible.

2. The drains and drainage system capacity shall be sized to carry the volumetric flow of water discharged from the automatic sprinkler system without backing up at the drains or pooling to a depth greater than ¼-inch (6.5mm). The sprinkler coverage area used to calculate the required volumetric flow is permitted to be based on the smaller of the following:

   1. The remote area in accordance with NFPA 13 – provided it is located in the area served by the drains

   2. The area of the building or portion thereof served by the drains.

   Exception: When released onto the ground within a fire area, the volumetric flow of water is permitted to be reduced to account for the percolation into the soil. An engineering analysis shall be provided to establish the reduction.

3. Floors shall slope to drains. Impermeable curbs and floor slope shall be designed to prevent spilled *Class 1 Liquids* and water discharged from the automatic sprinkler system from flowing to adjoining areas. Floor slope shall not be less than 2 percent.

   Exceptions:

   1. Floors in existing buildings with less than 2 percent slope are permitted to be used provided they are made liquid tight and floor sinks are installed as necessary to preclude water discharged from the automatic sprinkler system from pooling in low spots. These drains shall be installed in addition to the drains required in Section 4003.6.1.1, Item 2.

   2. Where trench drains or a combination of impermeable curbs and trench drains surround the sprinkler coverage area, the floors shall slope to the drains at a rate of not less than 1 percent. Where a combination of impermeable curbs and trench drains is used, no less than 50 percent of the perimeter shall be protected by trench drains.

   3. Drainage systems shall terminate in an *approved* secondary containment reservoir designed to contain a spill from the largest *vessel* in the area served by the drains plus the volumetric flow of water calculated in Section 4003.6.1.1, Item 2 for a period of 20 minutes. An *approved* automatic monitoring method shall be provided to detect material in the reservoir. Monitoring devices shall be connected to *approved* visual and audible alarms. Reservoir capacity to accommodate the required secondary containment volume shall be maintained at all times.

Exception: Release of *Class 1 Liquids* and fire protection water directly into a sanitary or storm-water drainage system, onto the ground, or a combination thereof is permitted when in compliance with federal, state, and local governmental agencies' regulations and permits.

4003.6.2.2 Outdoor. Secondary containment for outdoor storage areas shall be in accordance with Chapter 57.

4003.6.3 Occupant and property protection. Occupant and property protection shall be provided in accordance with Sections 4003.6.3.1 through 4003.6.3.4.

4003.6.3.1 Automatic sprinklers. An automatic sprinkler system shall be installed throughout ABPF H-2 and H-3 fire areas in accordance with Sections 4003.6.3.1.1 through 4003.6.3.1.3.

4003.6.3.1.1 Flammable liquids. Sprinkler discharge criteria in areas of ABPFs or portions thereof, with bulk storage (for distilling) of *Class 1 Liquids* in combustible containers, including casks, classified as H-2 or H-3, shall be in accordance with NFPA 30 but shall not be less than that required in accordance with NFPA 13 for Extra Hazard occupancies.

Exception: Sprinkler discharge criteria established by an *approved* engineered design.

Sprinkler discharge criteria for all *Class 1 Liquid use are*as and *storage areas* other than *Class 1 Liquid bulk storag*e (for distilling) in ABPFs or portions thereof classified as H-2 or H-3 occupancies, shall be in accordance with NFPA 30 but shall not be less than that required by NFPA 13 for Ordinary Hazard Group 2 over a minimum design area of 3,000 square feet (279 m2).

4003.6.3.1.2 Combustible dust producing operations. Automatic sprinkler protection criteria for H-2/*Combustible Dust* Producing Operations shall be determined in accordance with Section 4003.2.1.1.

4003.6.3.1.3 Non-high hazard occupancies. Sprinkler discharge criteria for ABPFs or portions thereof not classified as a division of the high-hazard occupancy classification and where *Class 1 Liquids* are not present in quantities or conditions required to be regulated by NFPA 30 or this chapter, shall be in accordance with NFPA 13.

4003.6.3.2 Sprinkler system supervision and alarms. Automatic sprinkler systems shall be electrically supervised in accordance with Section 903.4. Audible and visible occupant notification upon activation of water flow shall be provided in accordance with Section 907.5throughout all areas in ABPFs with automatic sprinkler protection.

4003.6.3.3 Emergency alarm. In addition to automatic sprinkler system flow detection and all fire safety functions required by other sections of this code, an *approved* manual fire alarm system in accordance with Sections 4003.6.3.3.1 through 4003.6.3.3.3 shall be provided in H-2 and H-3 occupancies in ABPFs.

4003.6.3.3.1 Initiation. Manual fire alarm boxes shall be installed in accordance with Section 907.4.2 outside of each interior *exit* or *exit access* door in the *fire barrier* walls separating the H-2 or H-3 occupancies, and in the exterior walls surrounding the H-2 or H-3 occupancies.

Exception: On exterior walls of H-2 or H-3 occupancies, fire alarm boxes are permitted to be installed inside of and adjacent to each interior *exit*, *exit access*, or *exit discharge* door.

Manual fire alarm boxes shall be installed at not more than 150-foot (45,720 mm) intervals along corridors, interior *exit* stairways or ramps, or *exit passageways* where *Class 1 Liquids* are transported.

4003.6.3.3.2 Notification. Emergency alarm audible and visible occupant notification shall be provided in accordance with Section 907 throughout *fire areas* containing H-2 or H-3 occupancies.

4003.6.3.3.3 Annunciation. The emergency alarm system shall be monitored and annunciated as a separate zone at the Fire Alarm Control Panel (FACP). A separate emergency alarm panel is required when prescribed by other sections of this code for regulated hazards other than, or in addition to, *Class 1 Liquids* or *combustible dust* production in the manufacture of *ethanol mixtures*. When the emergency alarm system is activated, information shall be communicated to the supervising station that the zone in alarm contains flammable liquids or *combustible dust*, or both.

4003.6.3.4 Portable fire extinguishers. A minimum of one *approved* portable fire extinguisher complying with Section 906 and having a rating of not less than 20-B shall be located not less than 10 feet (3048 mm) or more than 50 feet (15 240 mm) from any *Class 1 Liquid* storage or *use area* or *combustible dust* production area.

4003.6.4 Electrical. Electrical wiring, equipment and systems shall be installed and maintained in ABPFs in accordance with NFPA 70 (NEC), Section 605 and Sections 4003.6.4.1 through 4003.6.4.4.

4003.6.4.1 Classified electrical equipment. Classified electrical equipment per NFPA 70 (NEC) shall be installed in accordance with Section 5703.1.1. in areas of ABPFs or portions thereof, where an atmospheric concentration at or below 25 percent of the LFL or MEC can be maintained.

A classified area shall not be required to extend beyond an unpierced floor, roof or other solid partition that prevents the migration of liquids, vapors, and dust.

4003.6.4.1.1 Stills. Electrical equipment attached to or part of *stills* in H-2 or H-3 occupancies shall be Class 1, Division 1 in accordance with NFPA 70 (NEC).

4003.6.4.1.2 Electric motors. Electric motors located 8 feet (2438 mm) or less from any edge of equipment where *Class 1 Liquid* vapor/air mixtures could exist under normal operations and 3 feet (914 mm) or less above the floor or grade level within 25 feet (7620 mm) horizontally from any equipment with *Class 1 Liquids* shall be considered Class 1, Division 2 in accordance with NFPA 70 (NEC).

4003.6.4.1.3 Other applications. The *fire code official* is authorized to determine the extent of the Class 1 electrical equipment and wiring locations when a condition is not specifically covered by this chapter, Section 5703.1.1 or NFPA 70 (NEC).

4003.6.4.1.4 Industrial trucks. Powered industrial trucks used in areas designated as classified electrical locations in accordance with Section 4003.6.4.1 shall be listed and labeled for use in the intended environment in accordance with NFPA 505.

4003.6.4.2 Grounding. Equipment used for grain or *Class 1 Liquids* shall be electrically connected in accordance with NFPA 70 (NEC) and NFPA 77, and Sections 4003.6.4.2.1 and 4003.6.4.2.2 to prevent the accumulation of static electricity and sparking.

4003.6.4.2.1 Conveyance equipment. All conveyance equipment including that used for grain or *Class 1 Liquid* transfer shall be electrically connected by bond wires, ground cables, piping or similar means to a static grounding system. Conveyor belts shall be electrically conductive and equipped with static eliminators.

Nozzles and vessels used for the transfer of *Class 1 Liquids* shall be electrically interconnected by:

1. Metallic floor plates on which *vessels* stand while filling, when such floor plates are electrically connected to the fill stem and grounded; or

2. Where the fill stem is bonded to the container during filling by means of a bond wire.

Exceptions:

1. *Vats* or *casks* without internal metal or plastic components that could hold a potential difference.

2. Equipment used in post bottling operations such as packaging and box storage shall be grounded in accordance with standards applicable to that equipment and industry practice.

4003.6.4.2.2 Storage equipment. Plastic and metal grain storage bins or silos and *Class 1 Liquid* stationary tanks that are drawn down and refilled on a regular basis or are otherwise subjected to processes that could create an electric potential difference and sparking, shall be grounded.

4003.6.4.3 Lightning protection. Lightning protection in accordance with NFPA 780 and NFPA 70 shall be provided on ABPFs with an H-2 occupancy; on miscellaneous structures with a *combustible dust* production hazard due to the storage, handling, or processing of grains; and on ABPFs with an H-2 occupancy and a *still* having a 750 gallon (2839L) or larger capacity, or aggregate bulk storage of *Class 1 Liquids* of 7,800 gallons (29,526L) or greater (for distilling).

4003.6.4.4 Standby or emergency power. Where mechanical ventilation, treatment systems, limit controls, alarm, detection, or other electrically operated systems are required, such systems shall be provided with an emergency or standby power system in accordance with NFPA 70 (NEC) and Section 604.1.

Exception: Standby power for mechanical ventilation and limit control systems shall not be required where an *approved* fail-safe engineered system is installed.

4003.6.5 Location of stills and vessels. *Stills* and *vessels* in *Class 1 Liquid use areas* shall be located with respect to the lot lines of adjoining property which can be built on, in accordance with Tables 5703.4(1) and 5703.4(2).

Exceptions:

1. Where the exterior wall facing the adjoining lot line is without openings, has a fire-resistance rating of not less than 2 hours, and the ABPF is protected throughout with an automatic sprinkler system in accordance with Section 4003.6.3.1, the fire code official is authorized to reduce the minimum separation distances to not less than 1 foot (305 mm), or the minimum separation distance required by other provisions of the *Denver Building Code* or this code, whichever is greater.

2. Where the capacity of the largest still or vessel within the minimum separation distance is 250 gallons (946 L) or less, the aggregate volume of all stills and vessels within the minimum separation distance is 750 gallons (2839 L) or less, the normal operating pressure of all vessels within the minimum separation distance is 2.5 psig (17.2 kPa) or less, and the ABPF is protected throughout with an automatic sprinkler system in accordance with Section 4003.6.3.1, the minimum separation distance to lot lines is permitted to be 1 foot (305 mm), or the minimum separation distance required by other provisions of the *Denver Building Code* or this code, whichever is greater.

4003.6.6 Security. *Class 1 Liquid use areas* and *storage areas* shall be secured against unauthorized entry and safeguarded in a manner *approved* by the *fire code official*.

4003.6.7 Protection from vehicles. Bollards in accordance with Section 312 or other *approved* means shall be provided to protect all *vessels*, *stills*, and piping which handle *Class 1 Liquids* and are subject to vehicular, including industrial truck, damage.

4003.6.8 Labeling and signage. When a permit is required in accordance with Section 105, visible hazard identification markings, labels, signs and placards shall be placed on *vessels* and process piping used for *Class 1 Liquids*, and in *Class 1 Liquid storage areas*, *Class 1 Liquid use areas*, *combustible dust* production areas, and at the entrances thereto in accordance with applicable federal, state, and standards regulations, Sections 4003.6.8.1 through 4003.6.8.6, Chapters 50 and 57 and NFPA 704, or as *approved*. Content shall be in English, symbols permitted by this code and referenced standards, or both. Placards shall be in accordance with NFPA 704. The *fire code official* is authorized to require additional signs and placards at specific entrances and locations. Markings, labels, signs, and placards shall not be obscured or removed.

Exception: *Casks* are not required to be labeled.

4003.6.8.1 Warning signs. Warning signs shall be of a durable material, have a yellow background with black text, red text, or symbols, and shall convey the danger being identified. Warning sign text shall not be less than 3 inches (76 mm) in height with a 5/8-inch (15 mm) stroke.

4003.6.8.2 Information signs. Information signs shall be of a durable material, have a blue background with white text, red text, or symbols, or a white background with blue text, and shall convey the information required. Information sign text shall not be less than 3 inches (76 mm) in height with a 5/8-inch (15 mm) stroke.

Exception: Where otherwise specified by applicable regulations or standards.

4003.6.8.3 Location. Placards shall be located in accordance with NFPA 704 and shall be provided on the outside of each interior *exit* or *exit access* door in the *fire barrier* walls separating the H-2 or H-3 occupancies. Placards shall also be located on access or exit discharge doors in the exterior walls surrounding the H-2 or H-3 occupancies.

4003.6.8.4 Piping. Piping and tubing conveying Class 1, 2, or 3 flammable or combustible liquids between *vessels* including heat transfer fluids shall be identified in accordance with ASME A13.1 to indicate the material conveyed.

4003.6.8.5 Individual containers, packages, and cartons. Individual containers, *intermediate bulk containers*, packages, and cartons shall be conspicuously identified in accordance with federal regulations and applicable state laws.

4003.6.8.6 Tank marking. Every *tank* shall bear a permanent nameplate or marking indicating the standard used as the basis of design. *Stationary tanks* more than 100 gallons (379 L) in capacity used for the storage of *Class 1 Liquids* shall bear a warning sign and placard in accordance with Section 4003.6.8 corresponding to the material therein.

Exception: *Vats*.

4003.6.9 Sources of ignition. Control of sources of ignition shall be in accordance with Sections 4003.6.8.1 and 4003.6.8.2.

4003.6.9.1 Smoking. Smoking areas shall be in accordance with Section 310 and shall be prohibited in *Class 1 Liquid storage areas* or *use areas* and in *combustible dust* production areas. "No Smoking" warning signs in accordance with Sections 310.3 shall be provided in such areas and at all entrances to them.

Exception: Where designated smoking areas within ABPFs are permitted, they shall be separated from *Class 1 Liquid storage areas*, *Class 1 Liquid use areas*, and *combustible dust* production areas by a minimum of 25 feet (7620 mm) and shall be clearly identified with information signs in accordance with Section 4003.6.8.

4003.6.9.2 Open flames. Open flames including barrel charring operations, and devices operating at temperatures above 680°F are prohibited throughout *fire areas* containing *Class 1 Liquid storage areas*, *Class 1 Liquid use area*s, or *combustible dust* production areas.

Exceptions:

1. Areas permitted as designated smoking.
2. Areas where hot work permits have been issued in accordance with Section 105.
3. Listed and labeled gas fired or electric unit heaters installed in accordance with the *Denver Mechanical Code, Denver Fuel Gas Code, and NFPA 70 (NEC)*. Such equipment shall be located more than eight feet (2438 mm) from any edge of equipment where *Class 1 Liquid* vapor/air mixtures could exist under normal operations and more than three feet (914 mm) above the floor or grade level within 25 feet (7620 mm) horizontally from any equipment with *Class 1 Liquids*.
4.

4003.6.10 Separation of incompatible materials. Incompatible materials shall be separated in accordance with Section 5003.9.8.

4003.6.11 Seismic protection. All equipment in ABPFs including machinery, racks, piping, and stationary tanks shall be braced and anchored in accordance with the seismic design requirements of the *International Building Code* for the seismic zone in which the ABPF is located

4003.6.12 Protection from corrosion. Machinery, piping, tank, process vessel, and container materials exposed to *Class 1 Liquids* shall be protected in accordance with Sections 4003.6.12.1 and 4003.6.12.2.

4003.6.12.1 Protection from external corrosion and galvanic action. Where subject to external corrosion or galvanic action, machinery, piping, tank, process vessel, and container holding or conveying *Class 1 Liquids* shall be fabricated from noncorrosive materials or provided with corrosion protection. Dissimilar metallic parts subject to galvanic action shall not be joined.

4003.6.12.2 Chemical protection. Machinery, piping, tank, *process vessel*, and container materials used for *Class 1 Liquids* shall be compatible with all chemicals to which they are exposed including *ethanol*. Clean-in-place (CIPs) fittings shall be compatible with the cleaning agents used on the *vessels* and piping to which they are attached. Tank lining shall be in accordance with Section 4004.1.2.6.

4003.6.13 Limit controls. Limit controls shall be provided in accordance with Sections 4003.6.13.1 through 4003.6.13.3.

4003.6.13.1 Pressure control. Machinery, piping, *tanks*, *vessels*, and *stills* containing or conveying *Class 1 Liquids* shall be designed for the pressures they will be subjected to in accordance with applicable standards. Machinery, piping, *tanks*, *containers*, *processing vessels*, and *stills* containing or conveying *Class 1 Liquids* that can generate pressures exceeding design limits because of exposure fires or internal reaction shall have an *approved* means to relieve excessive positive and negative internal pressure. Vents provided to relieve excessive positive pressure shall discharge to an *approved* location.

4003.6.13.2 High-liquid-level control. *Stationary tanks* and *process vessels* with *Class 1 Liquids* having a capacity greater than 500 gallons (1893 L) shall be equipped with a device or other means to prevent overflow into the building including, but not limited to a float valve, preset meter on the fill line, valve actuated by the weight of the tank's contents, low-head pump incapable of producing overflow, or a liquid-tight overflow pipe at least one pipe size larger than the fill pipe and discharging by gravity to an *approved* location.

Exception: Liquid-level sight gauges or other manual means *approved* by the *fire code official* to determine fill level are permitted in ABPFs where the *use area* or *storage area* is small enough that the *stationary tank* or *process vessel* is effectively under constant observation during filling operations.

4003.6.13.3 Low-liquid-level control. *Approved* safeguards shall be provided to prevent a low-liquid level in *stationary tanks*, *processing vessels* and *stills* from creating a hazardous condition, including but not limited to overheating.

4003.6.14 Handling and transportation. *Containers*, *portable tanks*, and *casks* holding more than 5 gallons (19 L) of *Class 1 Liquids* being transported in a corridor or enclosed *exit* shall be on a cart or truck in accordance with Sections 5003.10.2 and 5003.10.3.

SECTION 4004
EQUIPMENT

4004.1 General. Equipment utilized for the production, storage, dispensing, blending, or handling of *Class 1 Liquids* shall be listed or *approved* and shall be in accordance with Sections 4004.1.1 through 4004.1.4.4.2.

4004.1.1 Piping systems. Piping systems for conveying *Class 1 Liquids* including piping, tubing, valves, pumps, and fittings shall be designed, installed, and maintained in accordance with Sections 4004.1.1.1 through 4004.1. 1.7, Section 5703.6, and ASME B31. The use of other standards is permitted when *approved*.

4004.1.1.1 Component design and construction. Piping, tubing, hoses, valves, fittings, and related components conveying *Class 1 Liquids* shall be in accordance with the following:

1. Piping, tubing, hoses, valves, pumps, fittings, and related components shall be designed and fabricated from materials of adequate strength and durability to withstand the structural and environmental conditions to which they are subjected.
2. Piping, tubing, hoses, valves, pumps, fittings, and related components used in liquid transfer operations shall be *approved* or listed for the intended use.
3. Where provided, in-line flame arresters in piping systems shall be installed and maintained in accordance with their listing or API 2028.
4. Where *Class 1 Liquids* are carried in piping pressurized above 15 pounds per square inch gauge (psig; 103 kPa), an *approved* means of leak detection shall be provided.

   Exception: Piping provided with overpressure relief devices.

4004.1.1.2 Piping supports. Piping systems shall be substantially supported and protected against physical damage and excessive stresses arising from seismic activity, settlement, vibration, expansion, and contraction. Piping supports shall be protected against exposure to fire by:

1. Draining spilled *Class 1 Liquids* away from the piping support system; or

2. Providing protection with a fire-resistance rating of not less than 2 hours; or

3. Other *approved* methods.

4004.1.1.3 Pipe joints. Pipe joints shall be in accordance with Sections 5703.6.9 and 5703.6.10.

Exception: Where located in concealed spaces within buildings, joints in piping systems used to convey *Class 1 Liquids* shall be welded.

4004.1.1.4 Valves. Piping systems with and without pumps shall contain a sufficient number of manual-control, auto-control, and check valves to protect the ABPF and properly control the flow of *Class 1 Liquids* in normal operation, in the event of physical damage, or the condition of fire exposure, and shall be in accordance with the following:

1. Readily accessible manual valves, automatic remotely-activated fail-safe emergency shutoff valves, or excess flow control shall be installed on gravity-fed supply piping and tubing and in systems pressurized above 15 pounds per square inch gauge (psig; 103 kPa) as close to the source as practical.

2. Manual emergency shutoff valves and controls for remotely activated emergency shutoff valves shall be clearly visible and readily accessible. Information signage in accordance with Section 4003.6.8 shall be provided identifying the emergency shutoff valves and controls.

3. Backflow prevention or check valves shall be provided when backflow could create a hazardous condition or cause an unauthorized discharge.

4004.1.1.5 Pumps. Solid or liquid fueled pumps are not permitted in *Class 1 Liquid use areas* or *storage areas*.

Exception: Fire pumps separated from the *Class 1 Liquid use areas* and *storage areas* by 2-hour fire-resistance rated *fire barriers* in accordance with Section 707 of the *Denver Commercial Building Code*.

Positive-displacement pumps shall be provided with pressure relief discharging back to the *vessel*, pump suction or other *approved* location, or shall be provided with interlocks to prevent over-pressure.

4004.1.1.6 Pressurized transfer systems. Gases introduced to provide for transfer of *Class 1 Liquids* shall be inert. Controls, including pressure relief devices, shall be provided to limit the pressure so the maximum working pressure of vessels cannot be exceeded. Where devices operating through pressure within a *tank*, *intermediate bulk container*, or *container* are utilized, the *tank*, *intermediate bulk container*, or *container* shall be a pressure vessel *approved* for the intended use.

4004.1.1.7 Maintenance. Piping and appurtenances shall be maintained in a safe operating condition and in accordance with their applicable listings and standards. Damage to piping or appurtenances shall be repaired using materials having equal or greater strength and fire resistance or the equipment shall be replaced, taken out of service, repaired, or disposed of in an *approved* manner. The repair, alteration, or reconstruction, including welding, cutting and hot tapping of piping that has been placed in service, shall be in accordance with NFPA 30.

4004.1.2 Vessels. The design and construction of *vessels* used in ABPFs for *Class 1 Liquids* shall comply with the applicable Sections 4004.1.2.1 through 4004.1.2.13.4 and NFPA 30 or shall be of an *approved* type. Pressure vessels shall comply with the *ASME Boiler and Pressure Vessel Code.*

4004.1.2.1 Underground storage of Class 1 Liquids. Underground storage of *Class 1 Liquids* in *tanks* shall comply with Chapters 50 and 57. Vaults shall be in accordance with Chapter 57. Underground storage of *Class 1 Liquids* in other *vessels* is prohibited.

4004.1.2.2 Outdoor storage of Class 1 Liquids. Outdoor storage shall be in accordance with Chapters 50 and 57.

4004.1.2.3 Tank vehicles and tank cars. Tank vehicles and tank cars shall not be used as storage or *processing vessels*.

4004.1.2.4 Design of supports. The supporting structure for *stationary tanks* and *portable tanks* with capacity greater than 660 gallons (2498 L) shall be designed in accordance with the *Denver Commercial Building Code* and NFPA 30.

4004.1.2.5 Locations subject to flooding. Where a *portable tank* or *intermediate bulk container* with capacity in excess of 660 gallons (2498 L), or a *stationary tank* is located in an area where it is subject to a rise in the water table, flooding or accumulation of water from fire suppression operations, uplift protection shall be provided in accordance with NFPA 30, Sections 22.14 and 23.14.

4004.1.2.6 Tank lining. Steel *stationary tanks* and steel *portable tanks* with capacity greater than 660 gallons (2498 L) are permitted to be lined only for the purpose of protecting the interior from corrosion or providing compatibility with a material to be stored. Only those liquids tested for compatibility with the lining material are permitted to be stored in lined tanks.

4004.1.2.7 Manual drainage. Manual drainage control valves shall be provided on *stationary tanks* and *portable tanks* with capacity greater than 660 gallons (2498 L). Manual drainage control valves on *stationary tanks* shall be located at *approved* locations remote from the tanks to ensure their operation in a fire condition.

4004.1.2.8 Connections. Filling and emptying connections to *vessels* shall be provided with liquid-tight caps, covers, plugs, or valves which shall be closed when not in use.

Connections located below normal *Class 1 Liquid* levels in *stationary tanks* with capacity of 500 gallons (1893 L) or more shall be provided with internal or external isolation valves located as close as practical to the shell of the tank.

4004.1.2.9 Materials used in tank construction. The materials used in tank construction shall be in accordance with NFPA 30.

4004.1.2.10 Separation between adjacent tanks. The separation between stationary tanks containing *Class 1 Liquids* shall be in accordance with NFPA 30, Table 22.4.2.1.

Exceptions:

1. Where a group of no more than 4 *stationary tanks* are aligned in a single row, the minimum separation distance between tanks is permitted to be reduced to 18 feet (457 mm) provided no single tank is over 960 gallons (3634 L) and clear access of 3 feet (914 mm) is provided around the group.

2. Where *stationary tanks* are in the drainage path of *Class 1 Liquids* and are compacted in three or more rows or in an irregular pattern, the *fire code official* is authorized to require greater separation than specified in NFPA 30, Table 22.4.2.1 or other means to make tanks in the interior of the pattern accessible for emergency response including firefighting purposes.

4004.1.2.11 Maintenance. *Vessels* and their appurtenances shall be maintained in a safe operating condition in accordance with their listings, applicable standards, and industry practice. Damage and malfunctions shall be repaired using materials having equal or greater strength and fire resistance. *Vessels* leaking *Class 1 Liquids* shall be promptly emptied, repaired, and returned to service. *Stationary tanks* not returned to service shall be abandoned in accordance with Section 5704.2.13 or removed in accordance with Section 5704.2.14.

4004.1.2.12 Vent lines. *Portable tanks* with a storage capacity of 660 gallons (2498 L) or more and *stationary tanks* shall be provided with normal and emergency vents in accordance with Sections 4004.1.2.12.1 through 4004.1.2.12.5 to relieve positive and negative pressures such as those created from filling and draining.

Vent lines shall not be used for purposes other than venting unless *approved*.

4004.1.2.12.1 Installation of vent piping. Vent pipes shall be designed, sized, constructed, and installed in accordance with Sections 5703.6, 5704.2.7.3, and 5704.2.7.4. Vent pipes shall be installed to drain toward the tank without sags or traps in which liquid can collect. Vent pipes shall be protected from physical damage and vibration.

4004.1.2.12.2 Vent-line flame arresters and pressure-vacuum vents. Normal vents shall be equipped with vent-line flame arresters and pressure-vacuum vents in accordance with Section 5704.2.7.3.2.

4004.1.2.12.3 Vent pipe outlets. To facilitate atmospheric dispersion, vent outlets shall be located so *flammable vapors* are released at a safe point outside of buildings, directed upward or horizontally away from adjacent walls so vapors will not be trapped by eaves or other obstructions. Vent outlets shall not be less than 12 feet (3658 mm) above the finished ground level and shall not be less than 5 feet (1524 mm) from building openings or lot lines of properties that can be built upon.

4004.1.2.12.4 Manifolding. Vent pipes are permitted to be manifolded only for special purposes such as vapor recovery, vapor conservation or air pollution control. Manifolded vent pipes shall be adequately sized to prevent system pressure limits from being exceeded when manifolded tanks are subject to the same fire exposure.

4004.1.2.12.5 Emergency venting. Tanks shall be equipped with additional venting that will relieve rapid overpressure due to fire. Emergency vents shall not discharge inside buildings. The venting shall be installed and maintained in accordance with NFPA 30, Section 22.7.

4004.1.2.13 Vessel openings other than vents. *Vessel* openings other than vents shall comply with Sections 4004.1.2.13.1 through 4004.1.2.13.4

4004.1.2.13.1 Filling and emptying connections. Filling and emptying connections to *stationary tanks* shall be properly identified in accordance with Section 4003.6.8.

4004.1.2.13.2 Fill pipes and discharge lines. For top-loaded *stationary tanks* and *portable tanks* with capacity greater than 660 gallons (2498 L), a metallic fill pipe shall be designed and installed to minimize the generation of static electricity by terminating the pipe within 6 inches (152 mm) of the bottom of the tank. It shall be installed in a manner which avoids excessive vibration.

4004.1.2.13.3 Manual gauging. *Vessel* openings for manual gauging, if independent of the fill pipe, shall be provided with a liquid-tight cap, cover, or plug. Covers shall be kept closed when not gauging. Such openings shall be protected against liquid overflow and possible vapor release by means of a spring-loaded check valve or other *approved* device.

4004.1.2.13.4 Protection against vapor release. *Tank* openings provided for purposes of vapor recovery shall be protected against possible vapor release by means of a spring-loaded check valve or dry-break connection, or other *approved* vapor-tight device. Openings designed for combined fill and vapor recovery shall be protected against vapor release.

Exceptions:

1. Where the opening is a pipe connected to a vapor processing system.
2. Where connection of the liquid delivery line to the fill pipe simultaneously connects the vapor recovery line.

4004.1.3 Stairs, platforms, and walkways. Stairs, platforms, and walkways installed to facilitate access to *vessels*, storage, pipes, and process equipment shall be noncombustible and designed and constructed in accordance with NFPA 30 and the *Denver Commercial Building Code*.

4004.1.4 Testing. Equipment, devices, and systems shall be tested in accordance with Sections 4004.1.4.1 through 4004.1.4.4.2.

4004.1.4.1 Piping systems. Before being covered, enclosed or placed in use, piping shall be hydrostatically tested to 150 percent of the maximum anticipated pressure of the system, or pneumatically tested to 110 percent of the maximum anticipated pressure of the system, but not less than 5 pounds per square inch gauge (psig; 34.5 kPa) at the highest point of the system. This test shall be maintained for a sufficient time period to complete visual inspection of joints and connections. For a minimum of 10 minutes, there shall be no leakage or permanent distortion. *Storage tanks* shall be tested independently from the piping.

Exception: Piping tested in accordance with the applicable section of ASME B31.9.

4004.1.4.1.1 Existing piping. Existing piping shall be tested in accordance with this section when the *fire code official* has reasonable cause to believe a leak exists. Piping used for *Class 1 Liquids* shall not be tested pneumatically.

Exception: Vapor-recovery piping is permitted to be tested using an inert gas.

4004.1.4.2 Tanks. Prior to being placed into service, *tanks* shall be tested in accordance with NFPA 30, Section 21.5.

4004.1.4.3 Safety systems. Automatic sprinkler systems, automatic sprinkler system monitoring, fire alarm systems, all limit controls, and all other fire- and life-safety systems shall pass the commissioning or acceptance tests in accordance with their respective design, installation, and testing standards prior to occupancy and use of the facility. Emergency alarms and limit-control monitoring shall be tested as for fire alarm systems in accordance with NFPA 72.

4004.1.4.4 Periodic testing. Equipment and safety systems shall be periodically tested in accordance with Sections 4004.1.4.4.1 and 4004.1.4.4.2. Written records of the tests conducted or maintenance performed shall be maintained in accordance with the provisions of Section 107.

Exceptions:

1. Periodic testing shall not be required when *approved* written documentation is provided substantiating testing will damage the equipment, device or system and the equipment, device or system is maintained as specified by the respective manufacturer.
2. Periodic testing shall not be required when the equipment and systems are utilized routinely as part of normal operations and maintained in good operating condition.

3. Periodic testing shall not be required for equipment, devices and systems that fail in a fail-safe manner.

4. Periodic testing shall not be required for equipment, devices and systems that self-diagnose and report trouble. Records of the self-diagnosis and trouble reporting shall be made available to the *fire code official*.

5. Periodic testing shall not be required if system activation occurs during the required test cycle for the components activated during the test cycle.

6. *Approved* maintenance in accordance with Section 5003.6 that is performed not less than annually or in accordance with an *approved* schedule shall be permitted to meet the testing requirements set forth in Sections 5003.2.9.1 and 5003.2.9.2.

4004.1.4.4.1 Equipment. The following equipment shall be tested periodically:

1. Piping

2. Limit controls required by Section 4003.6.13

4004.1.4.4.1.1 Testing frequency. The equipment listed in Section 4004.1.4.4.1 shall be tested at one of the frequencies listed below:

1. Not less than annually;

2. In accordance with the *approved* manufacturer's requirements;

3. In accordance with *approved* recognized industry standards; or

4. In accordance with an *approved* schedule.

4004.1.4.4.2 Safety systems. Safety systems listed in Section 4004.1.4.3 shall be periodically tested in accordance with their design, installation and testing standards.

Emergency alarms and limit-control monitoring shall be tested as for fire alarm systems in accordance with NFPA 72.

4004.2 Storage and use areas. Storage and process operations shall be in accordance with Sections 4004.2.1 through 4004.2.3.3.

4004.2.1 Storage areas. Storage of *Class 1 Liquids* and empty *containers* previously used to store *Class 1 liquids* shall be in accordance with Sections 4004.2.1.1 through 4004.2.1.4, Chapter 32, and NFPA 30.

Exception: Empty containers that are free from explosive vapors.

4004.2.1.1 General. Storage of *vessels* in closely packed *piles*, on pallets, in racks, or on shelves shall be in accordance with Sections 4004.2.1.1.1 through 4004.2.1.1.3.

4004.2.1.1.1 Basement storage. *Class 1 Liquids* shall be allowed to be stored in basements in amounts not exceeding the maximum allowable quantity per control area for "use-open" systems in Table 5003.1.1(1), provided that automatic suppression and other fire protection are provided in accordance with Chapter 9. Class II and IIIA liquids shall also be allowed to be stored in basements, provided that automatic suppression and other fire protection are provided in accordance with Chapter 9.

4004.2.1.1.2 Limited combustible storage. Limited quantities of class 1 through 4 commodities are permitted to be stored in the same non-separated area, room, or building as *Class 1 Liquids* provided the combustibles, other than those used for packaging the *Class 1 Liquids*, are separated from the *Class 1 Liquids* in storage by a minimum of 8 feet (2438 mm) horizontally either by open aisles, open racks, or racks filled with noncombustible commodities.

4004.2.1.1.3 Shelf storage. Shelving shall be of substantial construction and shall be braced and anchored in accordance with the seismic design requirements of the *Denver Commercial Building Code* for the seismic zone in which the ABPF is located. Shelving, chocks, scuffboards, floor overlay and similar installations shall be of noncombustible construction or of wood not less than a 1-inch (25 mm) nominal thickness; treatments, coatings and construction materials shall be compatible with *ethanol*. Shelves shall be provided with a lip or guard when used for the storage of individual *containers* or *casks*.

Exception: Storage in flammable liquid storage cabinets specifically designed for such use.

4004.2.1.1.4 Separation and aisles. Aisles shall be provided in *storage areas* such that all storage *vessels* are located no more than 20 feet (6096 mm) horizontally from a main aisle or access aisle. Main aisles shall be a minimum of 8 feet (2438 mm) wide in high piled combustible storage areas and a minimum of 4 feet wide in non-high piled combustible storage areas. Access aisles shall be a minimum of 4 feet (1219 mm) wide in high piled combustible storage areas and a minimum of 44 inches (1118 mm) wide in non-high piled combustible storage areas. Aisles utilized for manual stocking, separation between piles, separation between adjacent rows of racks, and separation between racks and adjacent pile storage shall be main aisles or access aisles. Aisles utilized for mechanical stocking shall be main aisles. All *piles* including palletized storage shall border a main aisle on a minimum of one side or end. Additional aisles shall be provided for access to doors, required windows, ventilation openings, standpipe connections, fire extinguishers, mechanical equipment, and switches. Such aisles shall be a minimum of 3 feet (914 mm) in width. A single aisle is permitted to serve multiple functions provided its minimum width is the largest of the widths required for the functions served.

4004.2.1.1.5 Material handling equipment. Material handling equipment shall be suitable to manipulate *vessels* at the highest tier level.

4004.2.1.1.6 Housekeeping. Storage shall be maintained in an orderly manner.

4004.2.1.1.7 Dunnage, scuffboards, floor overlay. Dunnage, scuffboards, floor overlay and similar installations shall be of noncombustible construction or of wood not less than a 1-inch (25 mm) nominal thickness.

4004.2.1.1.8 High piled combustible storage. Storage of vessels in closely packed *piles*, on pallets, in racks, or on shelves, where the top of storage is greater than 6 feet (1829 mm) in height, shall be considered high piled combustible storage. Where applicable requirements in Chapter 32 are in conflict with those in Section 4004.2.1, the more restrictive shall govern.

4004.2.1.1.9 Bulk beverage storage areas. There shall be no storage of combustible materials in the bulk beverage storage areas not related to beverage storage activities.

4004.2.1.1.10 Empty containers and tanks. Empty *containers* and *tanks* previously used for the storage of hazardous materials shall be free from residual material and vapor as defined by DOTn, the Resource Conservation and Recovery Act (RCRA) or other regulating authority or maintained as specified for the storage of hazardous material.

4004.2.1.2 Pile storage. *Pile* storage including palletized storage shall be in accordance with Sections 4004.2.1.3.1 through 4004.2.1.3.2.2.

4004.2.1.2.1 Stabilizing and supports. *Intermediate bulk containers*, *containers*, and *portable tanks* shall be stored in accordance with NFPA 30. Horizontally oriented *casks* stored in *piles* shall be supported by stackable racks or cradles of substantial construction designed for that purpose. Lateral bracing shall be provided for horizontally oriented *casks* stored in *piles* where the height of the *pile* exceeds three times the least dimension of the base rack or cradle. Storage height of horizontally oriented casks in this configuration shall not exceed the lesser of the rack manufacturer's recommendations or industry standards.

Exception: Where an *approved* engineering analysis is submitted demonstrating taller interior storage configurations are stable against overturning in accordance with the seismic design requirements of the *Denver Commercial Building Code* for the seismic zone in which the ABPF is located.

4004.2.1.2.2 Palletized storage. Palletized storage shall be in accordance with Sections 4004.2.1.3.2.1 and 4004.2.1.3.2.2.

4004.2.1.3.2.1 Stabilizing and supports. *Tiers of casks* oriented vertically for storage shall be separated by pallets or other dunnage that spreads the weight of the casks on the tier above over the casks on the tier below. A lower tier shall not have less than four casks and shall not have an empty cask when a tier above has a cask that is not empty. No more than two tiers of casks are permitted to be stacked vertically in this configuration.

Exceptions:

1. Where the collapse strength of the casks on the lowest tier is not exceeded, palletized storage of vertically oriented casks are permitted to be stacked to a height of four tiers where the casks are bound together in a square pattern groups of no less than four, by a steel band or other *approved* binding.
2. Where the collapse strength of the casks on the lowest tier is not exceeded, palletized storage of vertically oriented casks are permitted to be stacked to a height of six tiers where the casks are bound together in a square pattern in groups of no less than nine, by a steel band or other *approved* binding.
3. Where the collapse strength of the casks on the lowest tier is not exceeded, an engineered overturning analysis shall be provided demonstrating stability in accordance with the seismic design requirements of the *Denver Commercial Building Code* for the seismic zone in which the ABPF is located for storage configurations other than permitted in Exceptions 1 and 2.

4004.2.1.2.2.2 Idle combustible pallets. Storage of idle wood pallets shall be limited to a maximum pile size of 2,500 square feet (232 m^2) and a maximum storage height of 6 feet (1829 mm). Storage of idle plastic pallets shall be in accordance with Section 3206.4.1.1 and as limited by the capacity of the automatic sprinkler system in accordance with NFPA 13. Pallet storage shall be separated from all *Class 1 Liquid* storage by a minimum of 8 feet (2438 mm).

4004.2.1.3 Portable tank, intermediate bulk container, and container storage. *Portable tanks* and *intermediate bulk containers* stored over one tier in height shall be designed to nest securely without dunnage. Stacked *containers* shall be separated by pallets or dunnage to provide stability and to prevent excessive stress to container walls. The storage height and configuration shall be in accordance with NFPA 30.

4004.2.2 Grain storage. Grain storage shall be in accordance with Section 4003.2.1.1.

4004.2.3 Use areas. *Use areas* for *Class 1 Liquids* in amounts exceeding the MAQ shall be in accordance with Sections 4004.2.3.1 through 4004.2.3.3.

4004.2.3.1 General. Systems shall be suitable for the use intended and shall be designed by persons competent in such design. Controls shall be designed to prevent materials from entering or leaving the process or reaction system at other than the intended time, rate, or path. Where failure of an automatic control could result in a dangerous condition or reaction, the automatic control shall be fail-safe. *Use areas* with *Class 1 Liquids* in excess of the MAQs are prohibited in basements.

4004.2.3.2 Non-listed appliances. *Stills* where internal operating vapor pressures normally exceed 2.5 psig (103.4 kPa) or could potentially exceed 2.5 psig (103.4 kPa) due to failures in operating methods such as clogged head packing or other materials held on column plates shall be provided with a listed pressure relief valve piped to discharge to the exterior in an *approved* location.

Exception: *Stills* listed for operation above 2.5 psig (103.4 kPa) and, where *approved*, *stills* constructed in accordance with the *ASME Boiler and Pressure Vessel Code.*

4004.2.3.3 Class 1 Liquid transfer. *Class 1 Liquids* shall be transferred by one of the following methods:

1. From safety cans in accordance with NFPA 30.
2. Through an *approved* closed piping system.
3. From *vessels* by an *approved* pump taking suction through an opening in the top of the *vessel*.
4. By gravity from a *tank*, *intermediate bulk container*, or *container* through an *approved* self-closing or automatic-closing valve.
5. *Approved* engineered liquid transfer systems.

Exception: *Class 1 Liquids* transferred into and from *containers* not exceeding a 5.3-gallon (20 L) capacity.

.

CHAPTER 50
HAZARDOUS MATERIALS—GENERAL PROVISIONS

SECTION 5001
GENERAL

Section 5001.1 Scope is amended by replacing Exception 10 and 15, deleting exception 16, and adding exceptions 18 and 19 as follows:

10. The manufacture, storage, dispensing, and use of alcoholic beverages with 16 percent or less alcohol by volume and the remaining constituents having no hazardous properties regulated by the Denver Building Code or Denver Fire Code.

15. The manufacture, storage, dispensing, and handling of alcoholic beverages with greater than 16 percent alcohol by volume regulated in accordance with Chapter 40.

18. The manufacture, storage, dispensing, and use of alcoholic beverages not meeting the criteria of Exception 10, shall be in accordance with Chapter 40.

19. Battery powered industrial trucks regulated by Section 309.

Section 5001.3 Performance-based design alternative is replaced as follows:

5001.3 Performance-based design alternative. When *approved* by the *fire code official*, buildings and facilities where hazardous materials are stored, used or handled shall be permitted to comply with this section as an alternative to compliance with the other requirements set forth in this Section and Chapters 51 through 6. Written approval shall be obtained from the *fire and building code officials* prior to submitting a performance-based design.

Section 5001.5.2.1 Preparation is added as follows:

5001.5.2.1 Preparation. The *fire code official* is authorized to require HMIS submittals to be prepared by a qualified individual or firm acceptable to the *fire code official* in accordance with Section 104.

Section 5001.7 Laboratories using chemicals is added as follows:

5001.7 Laboratories using chemicals. Laboratory buildings, laboratory units, and laboratory work areas in which chemicals are handled or stored shall be in accordance with NFPA 45 and this code.

SECTION 5002
DEFINITIONS

Section 5002.1 Definitions is amended by adding the following definitions :

5002.1 Definitions. The following terms are defined in Chapter 2:

BIOHAZARD

CARCINOGEN

OTHER HEALTH HAZARD MATERIAL

RADIOACTIVE MATERIAL

RELEASE/UNAUTHORIZED DISCHARGE

SENSITIZER

SECTION 5003
GENERAL REQUIREMENTS

Table 5003.1.1(1) Maximum allowable quantity per control area of hazardous materials posing a physical hazard[a,j,m,n,p] has been amended as follows:

MATERIAL	CLASS	GROUP WHEN THE MAXIMUM ALLOWABLE QUANTITY IS EXCEEDED	STORAGE[b]			USE-CLOSED SYSTEMS[b]			USE-OPEN SYSTEMS[b]	
			Solid pounds (cubic feet)	Liquid gallons (pounds)	Gas (cubic feet at NTP)	Solid pounds (cubic feet)	Liquid gallons (pounds)	Gas (cubic feet at NTP)	Solid pounds (cubic feet)	Liquid gallons (pounds)
Flammable gas	Gaseous									
	1A and 1B	H-2	NA	NA	1,000[d,e]	NA	NA	1,000[d,e]	NA	NA

	(High BV)[r]									
	1B (Low BV)[r]				162,500[d,e]			162,500[d,e]		
	Liquified									
	1A and 1B (High BV)[r]	H-2	NA	(150)[d,e]	NA	NA	(150)[d,e]	NA	NA	NA
	1B (Low BV)[r]			(10,000)[d,e]			(10,000)[d,e]			

r. "High BV" Category 1B flammable gas has a burning velocity greater than 3.9 in/s (10 cm/s). "Low BV" Category 1B flammable gas has a burning velocity of 3.0 in/s (10 cm/s) or less.

Section 5003.4 Safety Data Sheets is replaced as follows:

5003.4 Safety Data Sheets. Hard copy Safety Data Sheets (SDS) shall be readily available on the premises for hazardous materials regulated by this chapter. Safety Data Sheets shall be located at the main entrance or a location *approved* by the Denver Fire Department. When a hazardous substance is developed in a laboratory, available information shall be documented and maintained at a Denver Fire Department *approved* location.

Section 5003.8.3.5 Hazardous materials in Group M display and storage areas and in Group S storage areas is amended as follows:

5003.8.3.5 Hazardous materials in Group M display and storage areas and in Group S storage areas. Hazardous materials located in Group M and Group S occupancies shall be in accordance with Sections 5003.8.3.5.1 through ~~5003.8.3.5.3~~5003.8.3.5.4.

Section 5003.8.5.4 Flammable gas is added as follows:

5003.8.5.4 Flammable gas. The aggregate quantity of Category 1B flammable gas having a burning velocity of 3.9 in/s (10 cm/s) or less stored and displayed within a single *control area* of a Group M occupancy, in an outdoor *control area*, or stored in a single *control area* of a Group S occupancy is allowed to exceed the *maximum allowable quantities* per *control area* specified in Table 5003.1.1(1) without classifying the building or use as a Group H occupancy, provided that the materials are stored and displayed in accordance with Section 5003.11.2.

Section 5003.11 Maximum allowable quantity for Group M storage and display and Group S storage is amended as follows:

5003.11 Group M storage and display and Group S storage. The aggregate quantity of ~~nonflammable solid and nonflammable or noncombustible liquid~~ hazardous materials stored and displayed within a single *control area* of a Group M occupancy, or an outdoor *control area*, or in a single *control area* of a Group S occupancy, is allowed to exceed the *maximum allowable quantity* per *control area* indicated in Section 5003.1 where in accordance with Sections 5003.11.1 ~~through 5003.11.3.11~~and 5003.11.2.

Section 5003.11.1 Nonflammable solid and nonflammable or noncombustible liquid hazardous materials is amended as follows:

5003.11.1 ~~Maximum allowable quantity per outdoor control area in Group M or S Occupancies~~Nonflammable solid and nonflammable or noncombustible liquid hazardous materials. The aggregate amount of nonflammable solid and nonflammable or combustible liquid hazardous materials

stored and displayed within a single *control area* of a Group M occupancy, in an outdoor *control area*, or stored in a single *control area* of a Group S occupancy, shall not exceed the amounts set forth in Table 5003.11.1.

Section 5003.11.3 Storage and display is amended as follows:

~~5003.11.3~~**5003.11.1.1** **Storage and display.** Storage and display shall be in accordance with Sections ~~5003.11.3.1~~5003.11.1.1.1 through ~~5003.11.3.11~~5003.11.1.1.11.

Section 5003.11.3.1 Density is renumbered as follows:

~~5003.11.3.1~~**5003.11.1.1.1** **Density.** Storage and display of solids shall not exceed 200 pounds per square foot (976 kg/m^2) of floor area actually occupied by solid merchandise. Storage and display of liquids shall not exceed 20 gallons per square foot (0.50 L/m^2) of floor area actually occupied by liquid merchandise.

Section 5003.11.3.2 Storage and display height is renumbered as follows:

~~5003.11.3.2~~**5003.11.1.1.2** **Storage and display height.** Display height shall not exceed 6 feet (1829 mm) above the finished floor in display areas of Group M occupancies. Storage height shall not exceed 8 feet (2438 mm) above the finished floor in storage areas of Group M and Group S occupancies.

Section 5003.11.3.3 Container location is renumbered as follows:

~~5003.11.3.3~~**5003.11.1.1.3** **Container location.** Individual containers less than 5 gallons (19L) or less than 25 pounds (11kg) shall be stored or displayed on pallets, racks, or shelves.

Section 5003.11.3.4 Racks and shelves is renumbered as follows:

~~5003.11.3.4~~**5003.11.1.1.4** **Racks and shelves.** Racks and shelves used for storage or display shall be in accordance with Section 5003.9.9.

Section 5003.11.3.5 Container type is renumbered as follows:

~~5003.11.3.5~~**5003.11.1.1.5** **Container type.** Containers shall be *approved* for the intended use and identified as to their content.

Section 5003.11.3.6 Container size is renumbered as follows:

~~5003.11.3.6~~**5003.11.1.1.6** **Container size.** Individual containers shall not exceed 100 pounds (45kg) for solids or 10 gallons (38L) for liquids in storage and display areas.

Section 5003.11.3.7 Incompatible materials is renumbered as follows:

~~5003.11.3.7~~**5003.11.1.1.7** **Incompatible materials.** *Incompatible materials* shall be separated in accordance with Section 5003.9.8.

Section 5003.11.3.8 Floors is renumbered as follows:

~~5003.11.3.8~~**5003.1.1.8** **Floors.** Floors shall be in accordance with Section 5004.12.

Section 5003.11.3.9 Aisles is renumbered as follows:

~~5003.11.3.9~~**5003.11.1.1.9** **Aisles.** Aisles 4 feet (1219 mm) in width shall be maintained on three sides of the storage or display area.

Section 5003.11.3.10 Signs is renumbered as follows:

~~5003.11.3.10~~5003.11.1.1.10 **Signs.** Hazard identification signs shall be provided in accordance with Section 5003.5.

Section 5003.11.3.11 Storage plan is renumbered as follows:

~~5003.11.3.11~~5003.11.1.1.11 **Storage plan.** A storage plan illustrating the intended storage arrangement, including the location and dimensions of aisles, and storage racks shall be provided.

Section 5003.11.2 Maximum allowable quantity per outdoor control area in Group M or S occupancies is deleted as follows.

~~**Section 5003.11.2 Maximum allowable quantity per outdoor control area in Group M or S occupancies.** The aggregate amount of nonflammable solid and nonflammable solid and nonflammable or noncombustible liquid hazardous materials stored and displayed within a single outdoor control area of a Group M occupancy shall not exceed the amounts set forth in Table 5003.11.1.~~

Section 5003.11.2 Category 1B flammable gas with low burning velocity and Table 5003.11.2 Maximum allowable quantity of low burning velocity Category 1B flammable gas in Group M and S occupancies per control area is added as follows:

5003.11.2 Category 1B flammable gas with low burning velocity. The aggregate quantity of Category 1B *flammable gas* having a burning velocity of 3.9 in/s (10 cm/s) or less stored and displayed within a single *control area* of a Group M occupancy, in an outdoor *control area*, or stored in a single *control area* of a Group S occupancy shall not exceed the amounts set forth in Table 5003.11.2.

TABLE 5003.11.2 MAXIMUM ALLOWABLE QUANTITY OF LOW BURNING VELOCITY CATEGORY 1B FLAMMABLE GAS IN GROUP MAND S OCCUPANCIES PER CONTROL AREA[a]

FLAMMABLE GAS CATEGORY	MAXIMUM ALLOWABLE QUANTITY PER CONTROL AREA	
CATEGORY 1B (Low BV)[d]	Sprinklered[b]	Nonsprinklered
Gaseous	390,000 cu ft	195,000 cu ft
Liquefied	40,000 lb[c]	20,000 lb

For SI: 1 pound = 0.454 kg, 1 square foot = 0.0929 m^2, 1cubic foot = 0.028 m^3, 1 inch per second = 2.54 cm/s.

a. Control areas shall be separated from each other by not less than a 1-hour fire barrier.
b. The building shall be equipped throughout with an approved automatic sprinkler system with a minimum sprinkler design density of Ordinary Hazard Group 2 in the area where flammable gases are stored or displayed.
c. Where storage areas exceed 50,000 square feet in area, the maximum allowable quantities area is allowed to be increased by 2 percent for each 1,000 square feet of area in excess of 50,000 square feet, up to not more than 100 percent of the table amounts. Separation of control areas is not required. The aggregate amount shall not exceed 80,000 pounds.
d. "Low BV" Category 1B flammable gases has a burning velocity of 3.9 in/s or less.

Section 5003.11.2.1 Fire protection and storage arrangements is added as follows:

5003.11.2.1 Fire protection and storage arrangements. Fire protection and container storage arrangements for quantities of Category 1B flammable gases permitted by Table 5003.11.2 shall be in accordance with all the following:

1. Storage of the Category 1B flammable gases on shelves shall not exceed 6 feet (1829) in height, and shelving shall be metal.
2. Rack storage, pallet storage or piles of the Category 1B flammable gas greater than 6 feet 6 inches (1981mm) in height shall be provided with an automatic sprinkler system with a minimum design of Extra Hazard Group 1.
3. Combustible commodities shall not be stored above the Category 1B flammable gases.
4. Flammable liquids shall be separated from the Category 1B flammable gases by a distance not less than 20 feet (6096mm). The separation is permitted to be reduced to 10 feet (3048 mm) where secondary containment or diking is provided to retain a flammable liquid spill at a distance of 10 feet (3048 mm) from the Category 1B flammable gas storage.

SECTION 5004
STORAGE

Section 5004.9 Emergency alarm is replaced as follows:

5004.9 Emergency alarm. An *approved* manual emergency alarm system shall be provided in buildings, rooms, and areas used for the storage of hazardous materials in accordance with Section 908.4. Signage required by Section 908.4 shall state outside of the room: "**DO NOT ENTER WHEN LIGHT IS FLASHING – HAZMAT SPILL EMERGENCY ALARM ACTIVATED**", and inside of the room: "FLASHING LIGHT MEANS HAZMAT SPILL EMERGENCY ALARM ACTIVATED – EVACUATE ROOM AND BUILDING."

Section 5004.10 Supervision and monitoring is replaced as follows:

5004.10 Supervision and monitoring. Emergency alarm, detection, and automatic fire-extinguishing systems required by Section 5004, shall be electrically supervised. System shall be monitored by an *approved* Class I central station service.

Section 5004.12 Noncombustible floor is replaced as follows:

5004.12 Noncombustible floor. Except for surfacing, floors, walkways, ramps, structures for walkways, and ramps of storage areas shall be of noncombustible construction.

SECTION 5005
USE, DISPENSING AND HANDLING

Section 5005.1.2 Noncombustible floor is replaced as follows:

5005.1.2 Noncombustible floor. Except for surfacing, floors, walkways, ramps, structures for walkways, and ramps of areas where liquid or solid hazardous materials are dispensed or used in open systems shall be of noncombustible, liquid-tight construction.

Section 5005.2.1.1 Ventilation is replaced as follows:

5005.2.1.1 Ventilation. Where gases, liquids or solids having a hazard ranking of 3 or 4 in accordance with NFPA 704 are dispensed or used, mechanical exhaust ventilation shall be provided to capture fumes, mists or vapors at the point of generation. Means & methods for determining exhaust capture requirements can be found in the "*Industrial Ventilation, A Manual of Recommended Practice*", 29th edition, published by the American Conference of Governmental Industrial Hygienists (ACGIH).

Exception: Gases, liquids or solids which can be demonstrated not to create harmful fumes, mists or vapors under the conditions in which they are handled.

CHAPTER 53
COMPRESSED GASES

SECTION 5307
COMPRESSED GASES NOT OTHERWISE REGULATED

Section 5307.2 Ventilation exception #3 is added as follows:

Exceptions:

3. Areas containing enrichment systems, enrichment with gas burners and inert gas systems shall comply with Sections 5307.4, 5307.5, & 5307.6, respectively.

Section 5307.2.2 Insulated liquid cryogenic fluid systems is added as follows:

5307.2.2 Insulated liquid cryogenic fluid systems. Areas containing insulated liquid cryogenic fluid systems used in commercial, manufacturing or industrial applications shall comply with Section 5307.6.

Section 5307.3 Insulated liquid carbon dioxide systems used in beverage dispensing applications and all subsections are replaced as follows:

5307.3 CO_2 Systems used in beverage dispensing applications. CO_2 systems with more than 100 pounds (45.4 kg) of CO_2 or any system using any amount of CO_2 below grade used in beverage dispensing applications shall comply with Sections 5307.3.1 through 5307.3.8.

Definitions

Asphyxiation: to lose consciousness by impairing normal breathing, to suffocate or smother.

Dewar: a vacuum flask that holds a cryogenic or liquefied gas.

CO_2 Detector: a device to measure the concentration of CO_2 in the air.

CO_2 Gas Detection Control Unit: a system component that monitors inputs and controls outputs through various types of circuits.

Indoor use of CO_2: Rooms or areas sheltered from the weather and environmental conditions.

Liquid CO_2 Systems: An assembly of equipment consisting of one or more CO_2 supply containers, interconnecting piping, pressure regulators, and pressure relief devices.

PEL: Permissible Exposure Limit for CO_2 gas is 5,000 PPM (0.5 percent) Time Weighted Average (TWA) @ 8 hours a day, 40 hours per week.

STEL: Short-Term Exposure Limit for CO_2 is 30,000 PPM (3.0 percent) for less than 15 minutes.

IDLH: Immediately Dangerous to Life & Health for CO_2 is 40,000 PPM (4.0 percent).

5307.3.1 Reserved.

5307.3.2 Equipment. The storage, use, and handling of CO_2 shall be in accordance with Chapter 53 and the applicable requirements of NFPA 55, Chapter 13. All equipment utilized in compressed gas systems shall be compatible with the intended gas and use.

5307.3.2.1 Containers, cylinders, and tanks. Gas supply containers, cylinders, and tanks shall be designed, fabricated, tested, labeled, and installed in accordance with manufactures' specifications and shall be maintained in accordance with the regulations of *DOTn 49 CFR, Parts 100-185* or the *ASME Boiler and Pressure Vessel Code*, *Section VIII*. Labels identifying the hydrostatic test date of containers, cylinders, and tanks must be always visible for inspection.

5307.3.2.1.1 Location. Location of gas supply containers, cylinders, and tanks, inside or outside the building, shall be at an *approved* location.

5307.3.2.1.2 Security. Gas supply containers, cylinders, and tanks shall be secured in an *approved* manner to prevent overturning. Containers, cylinders, and tanks located outside shall be secured and safeguarded against tampering and protected from physical damage if exposed to vehicle traffic.

5307.3.2.1.3 Design and construction. Bulk tank installations over 2,000 pounds will require an engineered foundation and construction permit in accordance with Section 105.7.31.

5307.3.3 Piping systems. Piping, tubing, fittings, valves, and pressure regulating devices shall be designed and installed in accordance with *approved* standards and manufacturers' recommendations.

5307.3.3.1 Piping, tubing, and hoses. Piping, tubing, and hose materials shall be compatible with CO_2 and rated for the temperatures and pressures encountered in the system. All hoses and tubing used in CO_2 service shall be designed for a bursting pressure of at least four times their design pressure. PVC/ABS and other types of rigid plastic piping are not *approved* materials. Acceptable piping for CO_2 shall be the following:

1. Stainless steel A269 grade, which is either seamless or welded drawn over mandrel.
2. Copper K grade, hard drawn seamless.
3. Copper ACR grade (1/2-inch outside diameter or less) annealed seamless.
4. Plastic/polymer materials rated for use with CO_2 and compliant with *Code of Federal Regulations Title 21 FDA Part 177 Indirect Food Additives Polymers.*
5. Additional *approved* piping, tubing and hoses found in the Compressed Gas Association (CGA) standards for CO_2.

5307.3.3.2 Support. Gas piping shall not be attached or supported by any electrical light supports or wiring. All gas piping shall be supported by the building structures or other *approved* means.

5307.3.3.3 Identification. Markings for CO_2 piping systems shall consist of the content's name CO_2 and direction-of-flow arrow. Markings shall be provided at each valve; at wall, floor or ceiling penetrations; at each change of direction; and at not less than every 20 feet or fraction thereof throughout the piping run.

5307.3.3.4 Fittings, joints, and connections. Fittings, joints, and connections shall be subject to the approval of the *fire code official*.

5307.3.3.4.1 Fittings and joints between gas supply containers and automatic shutoff valve. Joints and fittings on the supply piping or tubing between the CO_2 supply source and the automatic system shutoff valve shall be threaded, compression, or welded.

5307.3.3.4.2 Unused connections. Unused piping or tubing connected to the supply system shall be capped or plugged. A closed valve will not be allowed in lieu of a cap or plug.

5307.3.3.4.3 All connections. All fittings and joints shall be exposed and located adjacent to the supply source or points of use and shall be protected by a detector.

5307.3.3.5 Valves. Piping systems shall be provided with valves in accordance with Sections 5307.3.3.5.1 through 5307.3.3.5.5.

5307.3.3.5.1 Pressure relief valves. Pressure relief valves shall be provided and piped to the outdoors.

5307.3.3.5.2 System shutoff valve. An automatic system shutoff valve shall be provided as near to the supply pressure regulator as possible and shall be designed to fail in a closed condition. Loss of electrical power to the valve and gas detection shall close the system automatic shut off valve. Automatic shutoff valves shall be designed and located so that all phases (i.e., gas, liquid and solid) of CO_2 will not interfere with the operation of the devices. Automatic system shutoff valve shall have components that indicate the valve operating position, open or closed.

5307.3.3.5.3 Appliance shutoff valves. Each appliance shall be provided with a shutoff valve within 3 feet of the appliance. All shutoff valves shall be capable of being locked or tagged in the closed position for servicing.

5307.3.3.5.4 Check valves. One-way flow check valves shall be installed at the most downstream end of copper runs that are used for beverage consumption.

5307.3.3.5.5 Accessibility and identification. Valves and controls shall be readily accessible at all times. Normal and emergency system shut-off valves shall be clearly identified. All valves shall be designed or marked to indicate clearly whether it is open or closed.

5307.3.3.6 Venting. Venting of gases shall be directed to an *approved* location outside the building. Insulated liquid CO_2 systems shall have pressure relief devices vented in accordance with NFPA 55.

5307.3.3.6.1 Beverage pumps. Beverage pumps shall be vented to the outside.

5307.3.4 Protection from damage. CO_2 systems shall be installed so the supply tanks, cylinders, piping, fittings, and other appurtenances are protected from damage by occupants or equipment during normal facility operations.

5307.3.5 Required protection. Where CO_2 supply tanks, cylinders, piping, and equipment are located indoors, rooms, or areas containing CO_2 supply tanks, cylinders, piping, and fittings and other areas where a leak of a CO_2 system can collect shall be provided with either ventilation in accordance with Section 5307.3.5.1 or a gas detection system in accordance with Section 5307.3.5.2.

5307.3.5.1 Ventilation. Mechanical ventilation shall be in accordance with the *Denver Mechanical Code* and shall comply with all the following:

1. Mechanical ventilation in the room or area shall be at a rate of not less than 1 cubic foot per minute per square foot [0.00508 $m^3/(s \cdot m^2)$].
2. Exhaust shall be taken from a point within 12 inches of the floor.
3. The ventilation system shall be designed to operate at a negative pressure in relation to the surrounding area.

4. Ventilation shall run continuously or be activated by a sensor or detector to maintain an atmosphere of less than 5,000 ppm.

5. A mechanical permit is required in accordance with Section 1 of the *Denver Building Code*.

5307.3.5.2 Gas Detection System. A gas detection system shall comply with all the following:

1. Continuous gas detection shall be provided to monitor areas where CO_2 can accumulate. Detection equipment shall be provided to indicate CO_2 levels at each point of use and at each supply tank area/room.

2. Detectors shall comply with all the below:

   a. Listed or *approved* devices.

   b. Permanently mounted.

   c. Installed at a height of no more than 12 inches above the floor or as *approved* by the fire code official. Detectors shall have no storage or other equipment within 3 inches on all sides of the detector, and/or placed in an area that would prevent CO2 from reaching the detector

   d. Connected to building electrical system by either hardwiring (requiring a separate electrical permit) or to a non-spliced cord and plug connection that is secured in an approved manner to prevent accidental disconnection/damage or to a CO_2 gas detection system unit.

   e. Auto calibrating and self "zeroing" devices are not permitted unless they can be zeroed and spanned.

   f. Located within manufacturers' specified detection range or within 15 feet (whichever is less) for each point of use and supply location.

   g. Listed to operate under environmental conditions such as temperature, humidity, and velocity variations.

   h. Devices used must be able to be calibrated for altitude.

   i. Detectors shall be provided with an open cage type cover or other approved device to protect from damage resulting from normal operation in the area or adjacent equipment or storage.

3. Alarm set points shall be set at:

   a. 5,000 PPM (0.5 percent) Time Weighted Average (TWA) – Self re-setting (non-latching) alarm.

      - Audible notification for employees only in *approved* locations with instructional signage.

   b. 15,000 PPM (1.5 percent) – Latching Alarm.

      - Audible notification for employees only in *approved* locations with instructional signage.

      - Requires a service company or *approved* trained employees to investigate, repair and reset.

c. 30,000 PPM (3 percent) – Latching Alarm.

- Initiate all amber horn/strobes provided near each interior supply container, cylinder, or tank and at each point of use. Additional amber horn/strobes shall be placed at the entrances to below grade locations, confined spaces including small volume rooms, and at walk-in coolers. The notification appliances shall be rated at a minimum of 80cd for visual intensity and 75 dBA for audibility. Notification appliances shall be mounted per NFPA 72 requirements with the entire lens mounted between 80 inches and 96 inches above finished floor. Notification appliances shall be listed to operate in special environments, such as outdoors, indoors, high or low temperatures, and high humidity.
- Activation of automatic system shutoff valve.
- Evacuate room/area and call 911.
- Provide an annunciator panel/unit that annunciates the location of the CO_2 detection zone in alarm by means of a directory LED (light-emitting diode) point display or LCD (liquid crystal display) to assist the responding firefighters. Annunciator panel/unit shall be installed in an *approved* location outside of the potentially CO_2 contaminated areas.
- Provide a graphic floor plan map of the area protected by the CO_2 gas detection system that is permanently mounted adjacent to the annunciator panel/unit or CO_2 gas detection control unit. Plans shall be of durable construction, easily readable in normal lighting, protected by a smooth, transparent, plastic surface and shall indicate the location of supply tank, points of use, and CO_2 detectors. The graphic map shall state "You Are Here" and be properly oriented to assist the responding firefighters.
- Provide a labeled and secured alarm silencing switch adjacent to the annunciator panel/unit that shall only de-activate the audible notification appliances (amber strobes shall remain on and automatic system shutoff valve shall remain closed) until the system is manually reset.
- Alarm silencing can only be performed by Denver Fire Department personnel. Manual reset can only be performed by a qualified service company or Denver Fire Department personnel.
- Alarm Signal shall be defined as the following: In buildings with a monitored sprinkler or fire alarm/detection system, the CO_2 gas detection system shall be connected to the building fire alarm control panel. This shall include a monitor modules or zones for a high alarm (30,000 ppm or 3.0 percent), a LED hazmat CO_2 alarm zone on the building annunciator, a non-latching supervisory CO_2 maintenance/testing bypass switch, and modified building graphic map indicating the location of the CO_2 gas detection control unit, annunciator panel/unit, CO_2 detectors, and CO_2 supply tank. Building fire alarm notification appliances shall not activate on this CO_2 hazmat alarm. The central station monitoring shall receive and dispatch a CO_2 hazmat alarm.

4. Signage shall be required adjacent to each horn/strobe as follows:

Outside the supply tank room or point of use area/room: ***"DO NOT ENTER WHEN LIGHT IS FLASHING – CO_2 LEAK DETECTED – EVACUATE IMMEDIATELY AND CALL 911"***

Inside the supply tank room or point of use area/room: ***"FLASHING LIGHT MEANS CO2 LEAK DETECTED – EVACUATE IMMEDIATELY AND CALL 911"***

The sign shall have a minimum 1-inch block lettering with a minimum ¼-inch stroke. The sign shall be on a contrasting surface of black on yellow and shall be of durable construction.

NFPA 704 placards for simple asphyxiants shall also be provided at the main entrance to supply tank rooms, areas, or confined spaces.

5. CO_2 Gas Detection Control Unit shall be:
   a. Listed or *approved*. Control unit locations are subject to field approval in accordance with item 5.d by DFD prior to installation.
   b. Used as the required annunciator panel/unit and silencing switch.
   c. Connected to building electrical by either hardwiring (requiring a separate electrical permit from the building department) or non-spliced cord and plug connection that is visible from control unit and is labeled and protected from accidental disconnection or damage.
   d. Labeled and installed in an *approved* location outside of the potentially CO_2 contaminated areas and shall be secured from unauthorized access. Buildings with a fire department key box can secure the control unit with a lockable cover whereas all other covers shall be secured with an *approved* breakable, recordable tie or wire. Ties and wires that have been replaced shall be recorded with the record presented to Denver Fire Department Inspection personnel upon request.

6. Wiring shall be:
   a. Wiring diagrams shall be provided for all initiating devices and notification appliances
   b. Pathway wiring, cable, and equipment shall be in accordance with 2017 NFPA 70, Article 760 and 770, as applicable
   c. Gas detection circuits shall be installed in a neat and workmanlike manner. Cables and conductors installed exposed on the surface of ceilings and sidewalls shall be supported by the building structure in such a manner that the cable will not be damaged by normal building use. Such cables shall be supported by straps, staples, cable ties, hangers, or similar fittings designed and installed so as not to damage the cable. The installation shall also comply with Article 300 as well as other referenced articles.
   d. Design shall account for voltage-drops for notification appliance circuits.

5307.3.6 Transfilling. Filling and transfilling of gases between storage containers, cylinders, tanks, and delivery vehicles shall be performed by qualified personnel using equipment and operating procedures in accordance with CGA P-1. Interior storage containers, cylinders and tanks shall be filled via remote fill ports on the exterior of the building at grade level. Exterior remote fill ports shall be fitted with a vent line to the outside. Delivery personnel shall have access to interior storage areas to inspect valves and piping prior to initiating filling operations. Interior supply containers, cylinders, and tanks shall be filled via a remote fill port on the exterior of the building positioned 3 feet from any pedestrian or overhead door and 3 feet above grade and 10 feet from air intakes and stairwells that go below grade. If the interior supply tank exceeds 1,000 pounds the fill connection port shall be positioned 10 feet from exits (pedestrian and overhead doors), air intakes, and 2 feet from all other openings (windows).

5307.3.7 Inspection and testing. All piping installations shall be visually inspected, calibrated, and pressure tested to determine that the materials, design, fabrication, and installation practices comply with the requirements of this code.

5307.3.7.1 Records. A written record of all alarm activations/resets, required inspections, testing, calibration, and maintenance shall be maintained in a logbook on the premises containing the 3 most current years of records and be available for review by Denver Fire Department personnel.

5307.3.7.2 Required inspections and testing. All piping installations shall be tested and inspected in accordance with Sections 5307.3.7.2.1 through 5307.3.7.2.5.

5307.3.7.2.1 Acceptance testing. Devices, appliances, and related equipment shall not be placed in operation until after the piping system has been checked for leakage as well as detectors, notification appliances and automatic shutoff valves have been tested by a qualified service company. All piping installations shall be visually inspected and pressure tested prior to initial operation. The test pressure downstream of the pressure regulator shall be not less than 110 percent of the operating pressure. Joints shall be checked with a bubble-forming solution. Acceptance testing is required to be witnessed by the fire code officials. Provide an inspection report to the *fire code official* for the piping and joint visual inspection and pressure test.

5307.3.7.2.2 Daily inspections. All detectors and alarms shall be visually inspected daily. These inspections are permitted to be conducted by trained employees.

5307.3.7.2.3 Monthly inspections. All storage vessels, piping, and appurtenances shall be visually inspected monthly. These inspections are permitted to be conducted by trained employees.

5307.3.7.2.4 Semi-annual inspections. Systems shall be visually inspected, gas detectors calibrated in accordance with manufacturers' specifications, alarms tested, and tested for leaks semi-annually by a qualified service company.

5307.3.7.2.5 Alterations and repair. In the event alterations, repairs, or additions are made, the affected piping shall be retested in accordance with Section 5307.3.7.2.1.

5307.3.7.3 Reserved.

5307.3.7.4 Calibration. Detectors shall be checked for accuracy, calibrated to a reference gas concentration, and span reset.

5307.3.7.5 Pressure testing. Pipe joints shall be exposed for examination during the test.

5307.3.7.5.1 Test medium. The test medium shall be air, nitrogen, CO_2, or an inert gas.

5307.3.7.5.2 Section testing. Piping systems shall be permitted to be tested as a complete unit or in sections. A valve shall not be subjected to the test pressure unless it can be determined that the valve, including the valve-closing mechanism, is designed to safely withstand the test pressure.

5307.3.7.5.3 Regulators and valve assemblies. Regulator and valve assemblies fabricated independently of the piping systems in which they are to be installed shall be permitted to be tested

with inert gas or air at the time of fabrication. Test records shall be maintained in accordance with Section 5307.3.7.2.1.

5307.3.7.5.4 Test preparation. All joints and fittings shall be exposed for examination during and after the test.

5307.3.7.5.4.1 Pipe clearing. Prior to testing, the interior of the pipe shall be cleared of all foreign material.

5307.3.7.5.4.2 Appliance and equipment isolation. Devices, appliances, and equipment that are not to be included in the test shall be isolated from the piping by closing the device shutoff valve.

5307.3.7.5.4.3 Test pressure measurement. Test pressure shall be measured with a pressure-measuring device designed and calibrated to read, record, or indicate a pressure loss caused by leakage during the pressure test period. The source of pressure shall be isolated before the pressure tests are made. Mechanical gauges used to measure test pressures shall have a range such that the highest end of the scale is not greater than five times the test pressure.

5307.3.7.5.4.4 Test pressure. The test pressures shall be as specified in Section 5307.3.7.2.1. Where the test pressure exceeds 125 psig (862 kPa gauge), the test pressure shall not exceed a value that produces a hoop stress in the piping greater than 50 percent of the specified minimum yield strength of the pipe or tubing. Pressures shall be adjusted smoothly and slowly to avoid pressure spikes.

5307.3.7.5.5 Test duration. The test duration shall be not less than 10 minutes.

5307.3.7.5.6 Visual inspection and cleaning. After testing is complete and the pressure is reduced to at or below operating pressure, all joints shall be cleaned of bubble-forming solution and visually inspected

5307.3.7.5.7 Detection of leaks and defects. The piping system shall withstand the test pressure specified without showing any evidence of leakage or other defects. Any reduction of test pressures as indicated by pressure gauges shall be deemed to indicate the presence of a leak.

5307.3.7.5.8 Corrections. Where leakage or other defects are located, the affected portion of the piping system shall be repaired or replaced and retested.

5307.3.8 Training. All employees shall receive annual training in hazard identification, physical properties, inspection, and emergency procedures. Training records shall be maintained on site and be available to fire inspectors upon request.

Section 5307.4 Carbon dioxide enrichment systems and all subsections are replaced as follows:

5307.4. Carbon Dioxide (CO2) gas enrichment systems using on-site supply tanks and/or cylinders in plant growing (husbandry) application. CO_2 enrichment systems using on-site supply tanks and/or cylinders with more than 100 pounds (45.4 kg) of CO_2 or any system using any amount of CO_2 below grade used in plant growing (husbandry) applications shall comply with Sections 5307.4.1 through 5307.4.12.

5307.4.1 Permits. Permits shall be required in accordance with Sections 105.

5307.4.2 Equipment. The storage, use, and handling of CO_2 shall be in accordance with Chapter 53 and the applicable requirements of NFPA 55, Chapter 13. All equipment utilized in compressed gas systems shall be compatible with the intended gas and use.

5307.4.2.1 Containers, cylinders and tanks. Gas storage containers, cylinders and tanks shall be designed, fabricated, tested and labeled with manufactures' specifications and shall be maintained in accordance with the regulations of DOTn 49 CFR, Parts 100-185 or the ASME Boiler and Pressure Vessel Code, Section VIII. Labels identifying the hydrostatic test date of containers, cylinders, and tanks must be always visible for inspection.

5307.4.2.1.1 Location. Location of gas storage containers, cylinders and tanks, inside or outside the building, shall be at an *approved* location.

5307.4.2.1.2 Security. Gas storage containers, cylinders and tanks shall be secured in an *approved* manner to prevent overturning. Containers, cylinders and tanks located outside shall be secured and safeguarded against tampering and protected from physical damage if exposed to vehicle traffic.

5307.4.2.1.3 Design and construction. Bulk tank installations over 2,000 pounds will require an engineered foundation and construction permit in accordance with Section 1 of the *Denver Building Code*, or other *approved* engineered solutions.

5307.4.2.2 Piping systems. Piping, tubing, fittings, valves, and pressure regulating devices shall be designed and installed in accordance with *approved* standards and manufacturers' recommendations.

5307.4.2.2.1 Piping, tubing and hoses. Piping, tubing, and hose materials shall be compatible with CO_2 and rated for the temperatures and pressures encountered in the system. All hoses and tubing used in CO_2 service shall be designed for a bursting pressure of at least four times their design pressure. PVC/ABS and other types of rigid plastic piping are not *approved* materials. Acceptable piping for CO_2 shall be the following:

1. Stainless steel A269 grade, which is either seamless or welded drawn over mandrel.
2. Copper K grade, hard drawn seamless.
3. Copper ACR grade (1/2-inch outside diameter or less) annealed seamless.
4. Plastic/polymer materials rated for use with CO_2.
5. Additional *approved* piping, tubing and hoses found in the Compressed Gas Association (CGA) standards for CO_2.

5307.4.2.2.2 Support. Gas piping shall not be attached or supported by any electrical light supports or wiring. All gas piping shall be supported by the building structures or other *approved* means.

53074.2.2.3 Identification. Markings for CO_2 piping systems shall consist of the content's name CO2 and direction-of-flow arrow. Markings shall be provided at each valve; at wall, floor or ceiling penetrations; at each change of direction; and at not less than every 20 feet or fraction thereof throughout the piping run.

5307.4.2.3 Fittings, joints and connections. Fittings, joints, and connections shall be subject to the approval of the *fire code official.*

5307.4.2.3.1 Fittings and joints between gas supply containers and automatic shutoff valve. Joints and fittings on the supply piping or tubing between the CO_2 supply source and the automatic system shutoff valve shall be threaded, compression or welded.

5307.4.2.3.2 Unused connections. Unused piping or tubing connected to the supply system shall be capped or plugged. A closed valve will not be allowed in lieu of a cap or plug.

5307.4.2.3.3 Concealed connections. All fittings and joints shall be exposed and located adjacent to the supply source or points of use and shall be protected by a detector.

5307.4.2.4 Valves. Piping systems shall be provided with valves in accordance with Sections 5307.4.2.4.1 through 5307.4.2.4.4.

5307.4.2.4.1 Pressure relief valves. Pressure relief valves shall be provided and piped to the outdoors.

5307.4.2.4.2 System shutoff valve. An automatic system shutoff valve shall be provided as near to the supply pressure regulator as possible and shall be designed to fail to a closed condition closing on loss of electrical power to the valve and gas detection. Additional automatic shutoff valves may be provided at each point of use. Automatic shutoff valves shall be designed and located so that all phases (i.e., gas, liquid and solid) of CO_2 will not interfere with the operation of the device.

5307.4.2.4.3 Appliance shutoff valves. Each appliance shall be provided with a shutoff valve within 3 feet of the appliance. All shutoff valves shall be capable of being locked or tagged in the closed position for servicing.

5307.4.2.4.4 Accessibility and identification. Valves and controls shall be readily accessible at all times. Normal and emergency system shut-off valves shall be clearly identified. All valves shall be designed or marked to indicate clearly whether it is open or closed.

5307.4.2.5 Venting. Venting of gases shall be directed to an *approved* location outside the building. Insulated liquid CO_2 systems shall have pressure relief devices vented in accordance with NFPA 55.

5307.4.3 Protection from damage. systems shall be installed so the storage tanks, cylinders, piping and fittings are protected from damage by occupants or equipment during normal facility operations.

5307.4.4 Required protection. Where CO_2 storage tanks, cylinders, piping and equipment are located indoors, rooms or areas containing CO_2 storage tanks, cylinders, piping and fittings and grow room/areas where CO_2 is released and can collect shall be provided with a gas detection system in accordance with Section 5307.4.4.1.

5307.4.4.1 Gas detection system. A gas detection system shall comply with all of the following:

1. Continuous gas detection shall be provided to monitor areas where CO_2 can accumulate. Detection equipment shall be provided to indicate CO_2 levels in each grow cultivation area/room and interior CO_2 storage location.
2. Detectors shall be:
   a. Listed or *approved* devices.
   b. Permanently mounted.

c. Installed at a height of no more than 48 inches above the floor or as *approved* by the *fire code official.* Detectors shall have no storage or other equipment within 3 inches on all sides of the detector, and/or placed in an area that would prevent CO_2 from reaching the detector.

d. Directly connected to building electrical supply and secured in an approved manner to prevent accidental disconnection or damage.

e. Auto calibrating and self "zeroing" devices are not permitted unless they can be zeroed and spanned.

f. Located within manufacturers specified detection range for each point of use and storage location.

g. Listed to operate under environmental conditions such as temperature, humidity, and velocity variations.

h. Devices used must be able to be calibrated for altitude. Devices used must be able to be calibrated for altitude.

3. Activation of the gas detection system shall initiate amber horn/strobes provided in the vicinity of each interior storage container, cylinder or tank and at each point of release. Additional amber horn/strobes shall be placed at the entrances to below grade locations and confined spaces. The notification appliances shall be rated a minimum of 80cd for a visible and 75 dBA for audibility. Notification appliances shall be mounted per NFPA 72 requirements with the entire lens mounted between 80 inches and 96 inches above finished floor. Notification appliances shall be listed to operate in special environments, such as outdoors, indoors, high or low temperatures, and high humidity. Provide notification appliances at the following locations:

   a. Inside an interior storage room/area and outside the room/area at each entrance.

   b. Inside grow cultivation room/areas.

4. Local alarm set points shall be set at: 5,000 PPM – Latching Alarm

   a. Visual and audible notification in *approved* locations at room or area in alarm.

   b. Activation of automatic system shut off valve.

   c. Evacuate the room in alarm and contact a qualified service company to investigate and address the condition.

   d. Reset of the emergency alarm to be conducted by qualified personnel.

5. Signage shall be required adjacent to each horn/strobe as follows.

   Storage area/room: "DO NOT ENTER WHEN LIGHT IS FLASHING - CO_2 LEAK DETECTED"

   Grow cultivation room/area dispensing: "FLASHING LIGHT MEANS CO_2 LEAK DETECTED –EVACUATE ROOM"

   The sign shall have a minimum 1-inch block lettering with a minimum 1⁄4-inch stroke. The sign shall be on a contrasting surface of black on yellow and shall be of durable construction.

Signage on entrance doors to grow cultivation and storage rooms: Signage shall be provided at entrance doors to each grow cultivation room/area and at each entrance to storage rooms/areas:

NFPA 704 placards for simple asphyxiants shall also be provided at the exterior main entrance and at each entrance to storage rooms/areas.

6. CO_2 Gas Detection Control Unit shall be:

   a. Listed or *approved*. Control unit locations are subject to field approval by DFD prior to installation.

   b. Used as the required annunciator panel/unit and silencing switch.

   c. Connected to building electrical system by either hardwiring (requiring a separate electrical permit) or non-spliced cord and plug connection that is visible from control unit and is labeled and secured in an approved manner to prevent accidental disconnection or damage.

   d. Labeled and installed in an *approved* location outside of the potentially CO_2 contaminated areas and shall be secured from unauthorized access. Buildings with a fire department key box can secure the control unit with a lockable cover whereas all other covers shall be secured with an *approved* breakable, recordable tie or wire. Subject to field approval. Ties and wires that have been replaced shall be recorded with the record presented to Denver Fire Department Inspection personnel upon request.

7. Wiring shall be:

   a. Wiring diagrams shall be provided for all initiating devices and notification appliances

   b. Pathway wiring, cable, and equipment shall be in accordance with 2017 NFPA 70, Article 760 and 770, as applicable

   c. Gas detection circuits shall be installed in a neat and workmanlike manner. Cables and conductors installed exposed on the surface of ceilings and sidewalls shall be supported by the building structure in such a manner that the cable will not be damaged by normal building use. Such cables shall be supported by straps, staples, cable ties, hangers, or similar fittings designed and installed so as not to damage the cable. The installation shall also comply with Article 300 as well as other referenced articles.

   d. Design shall account for voltage-drops for notification appliance circuits.

6. A minimum of one portable CO_2 meter shall be in use during business hours.

5307.4.5 Transfilling. Filling and transfilling of gases between storage containers, cylinders, tanks, and delivery vehicles shall be performed by qualified personnel using equipment and operating procedures in accordance with CGA P-1. Interior storage containers, cylinders and tanks shall be filled via remote fill ports on the exterior of the building at grade level. Exterior remote fill ports shall be fitted with a vent line to the outside. Delivery personnel shall have access to interior storage areas to inspect valves and piping prior to initiating filling operations. Interior supply containers, cylinders, and tanks shall be filled via a remote fill port on the exterior of the building positioned 3 feet from any pedestrian or overhead door and 3 feet above grade and 10 feet from air intakes and stairwells that go below grade. If the interior supply tank exceeds 1,000 pounds the fill connection port shall be positioned 10 feet from exits (pedestrian and overhead doors), air intakes, and 2 feet from all other openings (windows).

5307.4.6 Inspection and testing. All piping installations shall be visually inspected, calibrated, and pressure tested to determine that the materials, design, fabrication and installation practices comply with the requirements of this code.

5307.4.7 Records. A written record of all required inspections, testing, calibration, and maintenance shall be maintained in a logbook on the premises containing the three most current years of records and be available for review by Denver Fire Department personnel.

5307.4.8 Required inspections and testing. All piping installations shall be tested and inspected in accordance with Sections 5307.4.8.1 through 5307.4.8.5.

5307.4.8.1 Acceptance testing. Appliances and equipment shall not be placed in operation until after the piping system has been checked for leakage and detectors, notification devices and automatic shutoff valves have been tested by a qualified service company. All piping installations shall be visually inspected and pressure tested prior to initial operation. The test pressure downstream of the pressure regulator shall be not less than 110 percent of the operating pressure. Joints shall be checked with a bubble-forming solution. Acceptance testing is required to be witnessed by the fire code official and/or *building official*s. Provide an inspection report to the fire code official and/or *building official* for the piping and joint visual inspection and pressure test.

5307.4.8.2 Daily inspections. All detectors and alarms shall be visibly inspected daily. These inspections are permitted to be conducted by trained employees.

5307.4.8.3 Monthly inspections. All storage vessels, piping, and appurtenances shall be visually inspected monthly. These inspections are permitted to be conducted by trained employees.

5307.4.8.4 Semi-annual inspections. Systems shall be visually inspected, gas detectors calibrated in accordance with manufacturer's specification, alarms tested, and tested for leaks semi-annually by a qualified service company.

5307.4.8.5 Alterations and repair. In the event alterations, repairs or additions are made, the affected piping shall be retested in accordance with Section 5307.4.8.1.

5307.4.9 Reserved.

5307.4.10 Calibration. Detectors shall be checked for accuracy, calibrated to a reference gas concentration, and span reset.

5307.4.11 Pressure testing. Pipe joints shall be exposed for examination during the test.

5307.4.11.1 Test medium. The test medium shall be air, nitrogen, CO_2, or an inert gas.

5307.4.11.2 Section testing. Piping systems shall be permitted to be tested as a complete unit or in sections. A valve shall not be subjected to the test pressure unless it can be determined that the valve, including the valve-closing mechanism, is designed to safely withstand the test pressure.

5307.4.11.3 Regulators and valve assemblies. Regulator and valve assemblies fabricated independently of the piping systems in which they are to be installed shall be permitted to be tested with inert gas or air at the time of fabrication. Test records shall be maintained in accordance with Section 5307.4.8.1.

5307.4.11.4 Test preparation. All joints and fittings shall be exposed for examination during and after the test.

5307.4.11.4.1 Pipe clearing. Prior to testing, the interior of the pipe shall be cleared of all foreign material.

5307.4.11.4.2 Appliance and equipment isolation. Appliances and equipment that are not to be included in the test shall be isolated from the piping by closing the appliance shutoff valve.

5307.4.11.4.3 Test pressure measurement. Test pressure shall be measured with a pressure-measuring device designed and calibrated to read, record, or indicate a pressure loss caused by leakage during the pressure test period. The source of pressure shall be isolated before the pressure tests are made. Mechanical gauges used to measure test pressures shall have a range such that the highest end of the scale is not greater than five times the test pressure.

5307.4.11.4.4 Test pressure. The test pressures shall be as specified in Section 5307.6.6.5. Where the test pressure exceeds 125 psig (862 kPa gauge), the test pressure shall not exceed a value that produces a hoop stress in the piping greater than 50 percent of the specified minimum yield strength of the pipe or tubing. Pressures shall be adjusted smoothly and slowly to avoid pressure spikes.

5307.4.11.5 Test duration. The test duration shall be not less than 10 minutes.

5307.4.11.6 Visual inspection and cleaning. After testing is complete and the pressure is reduced to at or below operating pressure, all joints shall be cleaned of bubble-forming solution and visually inspected.

5307.4.11.7 Detection of leaks and defects. The piping system shall withstand the test pressure specified without showing any evidence of leakage or other defects. Any reduction of test pressures as indicated by pressure gauges shall be deemed to indicate the presence of a leak.

5307.4.11.8 Corrections. Where leakage or other defects are located, the affected portion of the piping system shall be repaired or replaced and retested.

5307.4.12 Training. All employees shall receive annual training in hazard identification, physical properties, inspections, and emergency procedures. Training records shall be maintained on site and be available to inspectors upon request.

Section 5307.5 Carbon Dioxide (CO2) Gas Enrichment Systems Using a Natural Gas Burner in Plant Growing (Husbandry) Applications is added as follows:

5307.5 Carbon Dioxide (CO_2) Gas Enrichment Systems Using a Natural Gas Burner in Plant Growing (Husbandry) Applications. Natural gas burners that are utilized to generate CO_2 in plant growing applications shall comply with Sections 5307.5.1 through 5307.5.6.

5307.5.1 Permits. Permits shall be required in accordance with Section105.

5307.5.2 Equipment. Natural gas burners shall be listed, labeled and installed in accordance with the manufacturer's installation instructions. Piping systems, combustion and ventilation air and venting for natural gas appliances shall be designed and installed in accordance with *approved* standards, the *International Fuel Gas Code* and manufacturer's recommendations.

5307.5.3 Required protection. Where natural gas burners are located indoors for CO_2 enrichment, grow room/areas shall be provided with a gas detection system in accordance with Section 5307.5.3.1 and carbon monoxide detection in accordance with Section 5307.5.3.2.

5307.5.3.1 Gas detection system. A gas detection system shall comply with all the following:

1. Continuous gas detection shall be provided to monitor areas where CO_2 can accumulate. Detection equipment shall be provided to indicate CO_2 levels in each grow cultivation area/room.

2. Detectors shall be:

   a. Listed or *approved* devices.

   b. Permanently mounted.

   c. Installed at a height of no more than 48 inches above the floor or as *approved* by the *fire code official.* Detectors shall have no storage or other equipment within 3 inches on all sides of the detector, and/or placed in an area that would prevent CO2 from reaching the detector.

   d. Directly connected to building electrical supply and/or fire alarm systems and secured in an approved manner to prevent accidental disconnection or damage.

   e. Auto calibrating and self "zeroing" devices are not permitted unless they can be zeroed and spanned.

   f. Located within manufacturer's specified detection range for each point of release.

   g. Listed to operate under environmental conditions such as temperature, humidity, and velocity variations.

   h. Devices used must be able to be calibrated for altitude.

3. Activation of the emergency alarm system shall initiate amber strobes/horns provided in each room/area where CO_2 can accumulate. Additional amber strobes and audible horns shall be placed at the entrances to below grade locations. The notification appliance shall be rated a minimum of 80cd for a visible and 75 dBA for audibility. Notification appliances shall be mounted per NFPA 72 requirements with the entire lens mounted between 80 inches and 96 inches above finished floor. Notification appliances shall be listed to operate in special environments, such as outdoors, indoors, high or low temperatures, and high humidity. Provide notification appliances at the following locations:

   a. Inside grow cultivation room/areas.

4. Local alarm set points shall be set at: 5,000 PPM – Latching Alarm

   a. Visual and audible notification in *approved* locations at room or area in alarm.

   b. Activation of the automatic natural gas control valves to each burner to a closed position stopping the generation of CO_2.

c. Evacuate the room in alarm and contact a qualified service company to investigate and address the condition.

d. Reset of emergency alarm to be conducted by qualified personnel.

5. Signage will be required adjacent to each horn/strobe as follows:

   Entrance to below grade location: "DO NOT ENTER WHEN LIGHT IS FLASHING – CARBON DIOXIDE LEAK DETECTED".

   Grow cultivation room/area dispensing: "FLASHING LIGHT MEANS CARBON DIOXIDE LEAK DETECTED – EVACUATE ROOM".

   The sign shall have a minimum 1-inch block lettering with a minimum ¼-inch stroke. The sign shall be on a contrasting surface of black on yellow and shall be of durable construction.

   Signage at entrance doors shall be provided at entrance doors to each grow cultivation room/area:

   NFPA 704 placards for simple asphyxiants shall also be provided at the exterior main entrance.

6. All CO2 burner systems shall shut down in the event of a loss of electrical power to the CO2 detectors.

7. A minimum of one portable CO_2 meter shall be in use during business hours.

5307.5.3.2 Carbon monoxide (CO) gas detection.

1. CO gas detection shall be provided to monitor products of combustion continuously.

2. Detectors shall be:

   a. Listed or *approved* devices.

   b. Permanently mounted.

   c. Installed per manufacturer's recommendations and directions.

   d. Directly connected to building electrical supply and fire alarm systems and protected from accidental disconnection or damage.

3. CO detection shall be at set at 35 PPM and upon activation shall initiate the following:

- Close the automatic valve to each burner.
- Activate the mechanical ventilation system.

4. All CO2 burner systems shall shut down in the event of a loss of electrical power to the carbon monoxide detector.
5. A minimum of one portable CO meter shall be in use during business hours.

5307.5.4 Inspection and testing. All detectors, alarms and CO_2 burners must be visually inspected, calibrated, and tested to determine that the materials, design, fabrication and installation practices comply with the requirements of this code.

5307.5.4.1 Records. A written record of all required inspections, testing, calibration, and maintenance shall be maintained in a logbook on the premises containing the three most current years of records and be available for review by Denver Fire Department personnel.

5307.5.4.2 Required inspections and testing. All detectors, alarms and CO_2 burner equipment shall be tested and inspected in accordance with Sections 5307.5.4.2.1 through 5307.5.4.2.6.

5307.5.4.2.1 Acceptance testing. Appliances and equipment shall not be placed in operation until after the detectors, notification appliances automatic gas control valves, and mechanical ventilation system have been tested by a qualified service company. Acceptance testing is required to be witnessed by *fire code official*s.

5307.5.4.2.2 Daily inspections. All detectors and alarms shall be visually inspected daily. These inspections are permitted to be conducted by trained employees.

5307.5.4.2.3 Monthly inspections. All CO_2 burners and appurtenances shall be visually inspected monthly. These inspections are permitted to be conducted by trained employees.

5307.5.4.2.4 Semi-annual inspections. Systems shall be visually inspected, and gas detectors calibrated in accordance with manufacturer specification semi-annually by a qualified service company.

5307.5.4.2.5 Annual testing. All detectors, alarms, gas control valves and mechanical ventilation systems shall be tested annually by a qualified service company.

5307.5.4.2.6 Alterations and repair. In the event alterations, repairs or additions are made, the affected equipment shall be retested in accordance with Section 5307.5.4.2.1

5307.5.4.3 Reserved

5307.5.4.4. Calibration. Detectors shall be checked for accuracy, calibrated to a reference gas concentration, and span reset.

5307.5.5 Training. All employees shall receive annual training in hazard identification, physical properties, inspections, and emergency procedures. Training records shall be maintained on site and be available to inspectors upon request.

5307.5.6 Mechanical Ventilation. A mechanical ventilation system shall be provided in accordance with the *Denver Mechanical Code* that complies with all the following:

1. Mechanical ventilation system shall be provided in enriched spaces capable of producing a ventilation airflow rate of 0.75 cfm per square foot (0.0038 m3/s • m2) of floor area.
2. The ventilation system shall discharge to the outdoors.

3. When active, the ventilation system shall operate at a negative pressure to adjacent indoor spaces.

Section 5307.6 Inert Gas Systems Used in Commercial, Manufacturing or Industrial Applications is added as follows:

5307.6 General. Inert gas systems with more than 100 pounds (45.4 kg) of an inert gas or any system using any amount of an inert gas below grade used in a commercial, manufacturing, or industrial application, such as breweries, water treatment with pH balancing, food processing or laboratories shall comply with Sections 5307.6.1 through 5307.6.7. Inert gases include but are not limited to argon, helium, nitrogen and carbon dioxide. Provisions of Section 5307.3 are applicable where CO_2 is used.

Exceptions:

1. Medical gas systems
2. Gaseous Fire suppression systems
3. Carbon dioxide gas enrichment systems in accordance with Section 5307.4

5307.6.1 Permits. Permits shall be required in accordance with Sections 105.

5307.6.2 Equipment. The storage, use, and handling of inert gases shall be in accordance with Chapters 53 and 55, and the applicable requirements of NFPA 55. All equipment utilized in compressed gas systems shall be compatible with the intended gas and use.

5307.6.2.1 Containers, cylinders and tanks. Gas storage containers, cylinders and tanks shall be designed, fabricated, tested and labeled with manufactures' specifications and shall be maintained in accordance with the regulations of DOTn 49 CFR, Parts 100-185 or the ASME *Boiler and Pressure Vessel Code,* Section VIII. Labels identifying the hydrostatic test date of containers, cylinders, and tanks must be always visible for inspection.

5307.6.2.1.1 Location. Location of gas storage containers, cylinders and tanks, inside or outside the building, shall be at an *approved* location.

5307.6.2.1.2 Security. Gas storage containers, cylinders and tanks shall be secured in an *approved* manner to prevent overturning. Containers, cylinders and tanks located outside shall be secured and safeguarded against tampering and protected from physical damage if exposed to vehicle traffic.

5307.6.2.1.3 Design and construction. Bulk tank installations over 2,000 pounds will require an engineered foundation and construction permit in accordance with Section 130.3 of the *Administration of the Denver Building Code or other approved engineered solutions.*

5307.6.2.2 Piping systems. Piping, tubing, fittings, valves and pressure regulating devices shall be designed and installed in accordance with *approved* standards and manufacturers' recommendations. PVC/ABS and other types of rigid plastic piping are not *approved* materials. Piping systems shall be marked in accordance with Chapter 53. Valves and controls shall be readily accessible at all times. Normal and emergency shut-off valves shall be clearly identified. Pressure relief valves shall be provided and piped to the outdoors. Each appliance or piece of equipment shall be provided with a shutoff valve within 3 feet of the appliance or piece of equipment. Automatic system shutoff valves shall be provided as near to the supply pressure regulator or container as possible and designed to fail to a closed condition closing on loss of electrical power to the valve and gas detection. All valves shall be designed or marked to indicate clearly whether it is open or closed. All fittings and joints shall be exposed and located adjacent to the supply source or points of use and shall be protected by a detector.

5307.6.2.3 Venting. Venting of gases shall be directed to an *approved* location outside the building. Insulated liquid gas systems shall have pressure relief devices vented in accordance with NFPA 55.

5307.6.3 Protection from damage. Inert gas systems shall be installed so the storage tanks, cylinders, piping and fittings are protected from damage by occupants or equipment during normal facility operations.

5307.6.4 Required protection. Where inert gas storage tanks, cylinders, piping and equipment are located indoors, rooms or areas containing inert gas storage tanks, cylinders, piping and fittings and other areas where a leak of an inert gas system can collect shall be provided with ventilation in accordance with Section 5307.6.4.1 and a gas detection system in accordance with Section 5307.6.4.2.

5307.6.4.1 Ventilation. Mechanical ventilation installations shall be in accordance with the *Denver Mechanical Code* and shall comply with all of the following:

1. Mechanical ventilation in the room or area shall be at a rate of not less than 1 cubic foot per minute per square foot [0.00508 $m^3/(s \cdot m^2)$].
2. Exhaust ventilation shall be designed to consider the density of the potential vapors released. For vapors that are heavier than air, exhaust shall be taken from a point within 12 inches (305 mm) of the floor. For vapors that are lighter than air, exhaust shall be taken from a point within 12 inches (305 mm) of the highest point of the room.
3. The ventilation system shall be designed to operate at a negative pressure in relation to the surrounding area.
4. Ventilation shall run continuously or be activated by a sensor or detector to maintain an atmosphere of not less than 19.5 percent oxygen in the room.
5. A mechanical permit is required in accordance with Section 130.3 of the *Administration of the Denver Building Code.*

5307.6.4.2 Gas detection system. A gas detection system shall comply with all of the following:

1. Continuous gas detection shall be provided to monitor areas where a leak of an inert gas system can collect and create an oxygen deficient atmosphere. Detection equipment shall be provided at each point of use and in each storage area/room.
2. Detectors shall be:
   a. Listed or *approved* devices.
   b. Permanently mounted.
   c. Installed at a height consistent with the vapor density of the gas. Detectors shall have no storage or other equipment within 3 inches on all sides of the detector, and/or placed in an area that would prevent the air/gas mixture from reaching the detector.
   d. Directly connected to the building electrical supply and fire alarm system and secured in an approved manner to prevent accidental disconnection or damage.
   e. Auto calibrating and self "zeroing" devices are not permitted unless they can be zeroed and spanned.

f. Located within manufacturers' specified detection range for each point of use and storage location.

g. Listed to operate under environmental conditions such as temperature, humidity, and velocity variations.

h. Devices used must be able to be calibrated for altitude.

3. Activation of the gas detection system shall initiate amber horn/strobes provided in the vicinity of each interior storage container, cylinder or tank and at each point of release. Additional amber horn/strobes shall be placed at the entrances to below grade locations and confined spaces. The notification appliances shall be rated a minimum of 80cd for a visible and 75 dBA for audibility. Notification appliances shall be mounted per NFPA 72 requirements with the entire lens mounted between 80 inches and 96 inches above finished floor. Notification appliances shall be listed to operate in special environments, such as outdoors, indoors, high or low temperatures, and high humidity. Provide notification appliances at the following locations:

1.1 Inside an interior storage room/area and outside the room/area at each entrance.

4. Alarm set points shall be set at:

a. Oxygen levels below 19.5 percent – Self re-setting (non-latching) alarm

- Visual notification only in *approved* locations

b. Oxygen levels below 175 percent – Latching Alarm

- Visual and audible notification in *approved* locations
- Activation of automatic system shutoff valve
- Evacuate room/area and call 911
- Alarm signal*

*In buildings with a monitored sprinkler or fire alarm/detection system, the gas detection system shall be connected to the building fire alarm control panel. A fire alarm permit is required in accordance with Section 130.3 of the *Administration of the Denver Building Code.*

5. Signage shall be required adjacent to each horn/strobe as follows.

Outside the Storage Area/Room: **"DO NOT ENTER WHEN LIGHT IS FLASHING – OXYGEN DEFICIENT ATMOSPHERE DETECTED – CALL 911"**

Inside the Storage Area/Room or at point of use: **"FLASHING LIGHT MEANS OXYGEN DEFICIENT ATMOSPHERE DETECTED – EVACUATE IMMEDIATELY AND CALL 911"**

The sign shall have a minimum 1-inch block lettering with a minimum ¼-inch stroke. The sign shall be on a contrasting surface of black on yellow and shall be of durable construction.

On the door of the Storage Room*:* Signage shall be provided on each storage area entry door stating:

NFPA 704 placards for simple asphyxiants shall also be provided at the main entrance to storage rooms/areas.

5307.6.5 Transfilling. Filling and transfilling of gases between storage containers, cylinders and tanks and delivery vehicles shall be performed by qualified personnel using equipment and operating procedures in accordance with CGA P-1. Interior storage containers, cylinders and tanks shall be filled via remote fill ports on the exterior of the building at grade level. Exterior remote fill ports shall be fitted with a vent line to the outside. Delivery personnel shall have access to interior storage areas to inspect valves and piping prior to initiating filling operations.

5307.6.6 Inspection and testing. All piping installations shall be visually inspected, calibrated, and pressure tested to determine that the materials, design, fabrication and installation practices comply with the requirements of this code.

5307.6.6.1 Records. A written record of all required inspections, testing, calibration, and maintenance shall be maintained in a logbook on the premises containing the three most current years of records and be available for review by fire inspection personnel.

5307.6.6.2 Required inspections and testing. All piping installations shall be tested and inspected in accordance with Sections 5307.6.6.2.1 through 5307.6.6.2.5.

5307.6.6.2.1 Acceptance testing. Appliances and equipment shall not be placed in operation until after the piping system has been checked for leakage and detectors, notification appliances and automatic shutoff valves have been tested by a qualified service company. All piping installations shall be visually inspected and pressure tested prior to initial operation. The test pressure downstream of the pressure regulator shall be not less than 1½ times the proposed operating pressure. Joints shall be checked with a bubble-forming solution. Acceptance testing is required to be witnessed by the fire code official and/or building official. Provide an inspection report to the fire code official and/or building official for the piping and joint visual inspection and pressure test.

5307.6.6.2.2 Daily inspections. All detectors and alarms shall be visually inspected daily. These inspections are permitted to be conducted by trained employees.

5307.6.6.2.3 Monthly inspections. All storage vessels, piping, and appurtenances shall be visually inspected monthly. These inspections are permitted to be conducted by trained employees.

5307.6.6.2.4 Semi-annual inspections. Systems shall be visually inspected, gas detectors calibrated in accordance with manufacturer specification, alarms tested, and tested for leaks semi-annually by a qualified service company.

5307.6.6.2.5 Alterations and repair. In the event alterations, repairs or additions are made, the affected piping shall be retested in accordance with Section 5307.6.6.2.1.

5307.6.6.3 Reserved.

5307.6.6.4 Calibration. Detectors shall be checked for accuracy, calibrated to a reference gas concentration, and span reset.

5307.6.6.5 Pressure testing. Pipe joints shall be exposed for examination during the test.

5307.6.6.5.1 Test medium. The test medium shall be air, nitrogen, CO_2, or an inert gas.

5307.6.6.5.2 Section testing. Piping systems shall be permitted to be tested as a complete unit or in sections. A valve shall not be subjected to the test pressure unless it can be determined that the valve, including the valve-closing mechanism, is designed to safely withstand the test pressure.

5307.6.6.5.3 Regulators and valve assemblies. Regulator and valve assemblies fabricated independently of the piping systems in which they are to be installed shall be permitted to be tested with inert gas or air at the time of fabrication. Test records shall be maintained in accordance with Section 5307.6.6.2.1.

5307.6.6.5.4 Test preparation. All joints and fittings shall be exposed for examination during and after the test.

5307.6.6.5.4.1 Pipe clearing. Prior to testing, the interior of the pipe shall be cleared of all foreign material.

5307.6.6.5.4.2 Appliance and equipment isolation. Appliances and equipment that are not to be included in the test shall be disconnected from the piping by closing the isolation shutoff valve.

5307.6.6.5.4.3 Test pressure measurement. Test pressure shall be measured with a pressure-measuring device designed and calibrated to read, record or indicate a pressure loss caused by leakage during the pressure test period. The source of pressure shall be isolated before the pressure tests are made. Mechanical gauges used to measure test pressures shall have a range such that the highest end of the scale is not greater than five times the test pressure.

5307.6.6.5.4.4 Test pressure. The test pressures shall be as specified in Section 5307.6.6.2.1. Where the test pressure exceeds 125 psig (862 kPa gauge), the test pressure shall not exceed a value that produces a hoop stress in the piping greater than 50 percent of the specified minimum yield strength of the pipe or tubing. Pressures shall be adjusted smoothly and slowly to avoid pressure spikes.

5307.6.6.5.5 Test duration. The test duration shall be not less than ½-hour for each 500 cubic feet (14 m3) of pipe volume or fraction thereof. When testing a system having a volume less than 10 cubic feet (0.28 m3) the test duration shall be not less than 10 minutes. The duration of the test shall not be required to exceed 24 hours.

5307.6.6.5.6 Visual inspection and cleaning. After testing is complete and the pressure is reduced to at or below operating pressure, all joints shall be cleaned of bubble-forming solution and visually inspected

5307.6.6.5.7 Detection of leaks and defects. The piping system shall withstand the test pressure specified without showing any evidence of leakage or other defects. Any reduction of test pressures as indicated by pressure gauges shall be deemed to indicate the presence of a leak.

5307.6.6.5.8 Corrections. Where leakage or other defects are located, the affected portion of the piping system shall be repaired or replaced and retested.

5307.6.7 Training. All employees shall receive annual training in hazard identification, physical properties, inspection, and emergency procedures. Training records shall be maintained on site and be available to inspectors upon request.

CHAPTER 56
EXPLOSIVES AND FIREWORKS

SECTION 5601
GENERAL

Section 5601.1 Scope is amended by deleting all Exceptions.

Section 5601.1.3 Fireworks is amended by deleting Exceptions 1, 2, and 4.

Section 5601.2.4 Financial responsibility is replaced as follows:

5601.2.4 Financial responsibility. Before a permit is issued, as required by Section 105.5, the applicant shall file with the Fire Prevention Division a surety bond in the principal sum of $2,000,000 or a public liability insurance policy for the same amount, for the purpose of the payment of all damages to persons or property which arise from, or are caused by, the conduct of any act authorized by the permit upon which any judicial judgment results. The *fire code official* is authorized to specify a greater or lesser amount when, in his or her opinion, conditions at the location of use indicate a greater or lesser amount is required. Government entities shall be exempt from this bond requirement.

Section 5601.4 Qualifications is replaced as follows:

5601.4 Qualifications. Persons in charge of magazines, blasting, fireworks display, or pyrotechnic special effect operations shall obtain the appropriate State of Colorado and City and County of Denver Fire Department license. For pyrotechnic special effect operations, the license is that required for an outdoor display operator. Persons in charge of magazines, blasting, fireworks display, or pyrotechnic special effect operations shall not be under the influence of alcohol or drugs which impair sensory or motor skills, shall be at least 21 years of age, and shall demonstrate knowledge of all safety precautions related to the storage, handling, or use of explosive, explosive material, or fireworks.

Section 5601.5 Supervision is replaced as follows:

5601.5 Supervision. The *fire code official* is authorized to require operations permitted under the provisions of Section 105.5-to be supervised at any time by the *fire code official* in order to determine compliance with all safety and fire regulations. The Denver Fire Department Fire Prevention pyrotechnics personnel shall be retained for fire watch and to inspect all equipment and powder charges. The pyrotechnics firm to which the permit is issued/granted shall be responsible for the cost of this/these personnel.

CHAPTER 57
FLAMMABLE AND COMBUSTIBLE LIQUIDS

SECTION 5701
GENERAL

Section 5701.2 Nonapplicability is amended by replacing Item 10 and adding Item 14 as follows:

10. The manufacture, storage, dispensing, and use of alcoholic beverages with 16 percent or less alcohol by volume and the remaining constituents having no hazardous properties regulated by the Denver Building Code or Denver Fire Code.

14. The manufacture, storage, dispensing, and handling of alcohol beverages with greater than 16 percent alcohol by volume shall be in accordance with Chapter 40.

Section 5701.5.1 Altitude correction is added as follows:

5701.5.1 Altitude correction. Flash point and boiling point information for flammable and combustible liquids is referenced to sea level. In Denver, Colorado, the flash point and boiling point of flammable and combustible liquids will reduce by 8 degrees Fahrenheit and may cause reclassification of flammable and combustible liquids. Altitude reclassification shall be documented on submitted plans.

SECTION 5703
GENERAL REQUIREMENTS

Section 5703.6.2.2 Bulk transfer and process transfer piping is added as follows:

5703.6.2.2 Bulk transfer and process transfer piping. Closed double-wall steel piping and leak monitoring shall be required for bulk transfer and process transfer of flammable and combustible liquids inside buildings in the following applications:

1. Piping used for the manual transfer of fuel oil
2. Piping used for the automatic transfer of fuel oil from a stationary supply tank, located inside or outside the building, to fuel-burning equipment with or without a day tank
3. Piping used to transfer Class 1A, 1B and 1C flammable liquids

Exception: Single wall metallic piping may be used where:

1. the fuel storage tank and fuel-burning equipment are located in a parking garage
2. the fuel storage tank and fuel-burning equipment are located aboveground exterior to the building
3. fuel is automatically transferred from a tank vehicle to a stationary tank, provided the piping system is exposed and continuously supervised by trained personnel during the transfer operation
4. fuel is manually transferred inside a building from a portable tank not greater than 55 gallons provided the piping system is exposed and continuously supervised by trained personnel during the transfer operation.

Section 5703.6.2.3 Piping material is added as follows:

5703.6.2.3 Piping material. Metallic piping and installation shall be in accordance with Table 5703.6.2.3 and *ASME B31, Code for Pressure Piping.*

TABLE 5703.6.2.3
PIPING MATERIAL STANDARDS

MATERIAL	STANDARDS
Copper or copper-alloy pipe	ASTM B 42; ASTM B 302
Steel pipe	ASTM A 53; ASTM A 106

Section 5703.6.10 Pipe joints is amended by adding Exceptions 1 and 2 as follows:

Exceptions:

1. All joints in closed double wall steel piping required by Section 5703.6.2.2 shall be welded.
2. All joints in single wall pipe regulated by Section 5703.6.2.2 shall be welded or threaded. Flanged and other mechanical joints are not permitted.

SECTION 5704
STORAGE

Section 5704.2.13 Abandonment and status of tanks is replaced as follows:

5704.2.13 Abandonment and status of tanks. Tanks taken out of service shall be removed in accordance with Section 5704.2.14, or where *approved* by the *fire code official* safeguarded in accordance with Sections 5704.2.13.1 through 5704.2.13.2.3 and American Petroleum Institute *Standard API RP 1604*.

Section 5704.2.13.1.4 Tanks abandoned in place is deleted.

Section 5704.3.3 Indoor storage is amended by deleting Exception 2

Section 5704.3.8.5 Warehouse hose lines is deleted.

Section 5704.4.3 Spill control and secondary containment is by replacing the Exception as follows:

Exception: Containers stored on *approved* containment pallets in accordance with Section 5004.2.3 and containers stored in cabinets and lockers with integral spill containment. Storage of liquids classified as a Class III-B Combustible shall not be required to have secondary containment.

SECTION 5706
SPECIAL OPERATIONS

Section 5706.2.5 Type of tank is replaced as follows:

5706.2.5 Type of tank. Tanks shall be provided with top openings only. Dispensing by use of gravity is prohibited.

Section 5706.2.5.2 Tanks for gravity discharge is deleted.

CHAPTER 60
HIGHLY TOXIC AND TOXIC MATERIALS

SECTION 6004
HIGHLY TOXIC AND TOXIC COMPRESSED GASES

Section 6004.2.2.10.1 Alarms is replaced as follows:

6004.2.2.10.1 Alarms. The gas detection system shall initiate a local alarm and transmit a signal to a constantly attended control station when a short-term hazard condition is detected. The alarm shall be in accordance with Section 916. Signage required by Section 916 shall state; outside the room: **"DO NOT ENTER WHEN LIGHT IS FLASHING – [HIGHLY] TOXIC GAS LEAK DETECTED."** And inside the room: **"FLASHING LIGHT MEANS [HIGHLY] TOXIC GAS LEAK DETECTED – EVACUATE ROOM AND BUILDING."**

Exception: Signal transmission to a constantly attended control station is not required where not more than one cylinder of highly toxic or toxic gas is stored.

SECTION 6005
OZONE GAS GENERATORS

Section 6005.3.2 Ozone gas generator rooms is replaced as follows:

6005.3.2 Ozone gas generator rooms. Ozone gas generator rooms shall be mechanically ventilated in accordance with the *Denver Mechanical Code* with a minimum of six air changes per hour. Ozone gas generator rooms shall be equipped with a continuous gas detection system which will shut off the generator and sound a local alarm when concentrations above the permissible exposure limit occur. The alarm shall be in accordance with Section 916.10. Signage required by Section 916.9 shall state: **"DO NOT ENTER WHEN LIGHT IS FLASHING – OZONE CONCENTRATION ABOVE THE PERMISSIBLE EXPOSURE LIMIT DETECTED."**

Ozone gas-generator rooms shall not be normally occupied, and such rooms shall be kept free of combustible and hazardous material storage. Room access doors shall display an *approved* sign stating: **"OZONE GAS GENERATOR—HIGHLY TOXIC—OXIDIZER."**

CHAPTER 61
LIQUEFIED PETROLEUM GASES

SECTION 6101
GENERAL

Section 6101.2 Permits is replaced as follows:

6101.2 Permits. Permits shall be required as set forth in Section 105. Distributors shall not install or fill an LP-gas container for which a permit is required unless a permit for installation has been issued for that location. Installation of all tanks requires submittal of a site plan depicting proposed location on the property and all rights-of-way, structures, and proposed piping.

Section 6101.4 Prohibition is added as follows:

6101.4 Prohibition. The installation of LP-gas containers and use of LP-gas is prohibited where a source of natural gas is within 300 feet of the nearest property line.

Exception:

1. LP-gas containers used in accordance with this Section, NFPA 58, and the applicable provisions of Chapters 3, 6, 31, 33 and 61.
2. Dispensing installations and operations in accordance with this Section, NFPA 58 and the applicable provisions of Chapter 23.

SECTION 6103
INSTALLATION OF EQUIPMENT

Section 6103.2.1.7 Use for food preparation is amended by adding the following sentence to the end of the section:

Such containers shall not exceed a water capacity of 2.5 pounds. (1 kg).

SECTION 6104
LOCATION OF LP-GAS CONTAINERS

Section 6104.2 Maximum capacity within established limits is amended by adding Exceptions 2 and 3 as follows:

Exceptions:

2. For *one- and two-family dwellings* constructed under the *Denver Residential Code*, a maximum of 40 pounds of propane [or two 20-pound cylinders—one for use and one spare bottle] shall be permitted on the premises and a maximum of 5.4 pounds of propane (in maximum 2.7-pound cylinders) shall be permitted within the *dwelling*, including attached and detached garages.
3. For *townhouses*, condominiums, and apartments, one 20-pound propane cylinder is allowed to be stored in each detached garage or detached storage area.

SECTION 6107
SAFETY PRECAUTIONS AND DEVICES

Section 6107.4 Protecting containers from vehicles is amended by changing the reference from "NFPA 58" to "Section 312 of the Denver Fire Code."

SECTION 6109
STORAGE OF PORTABLE LP-GAS CONTAINERS AWAITING USE OR RESALE

Section 6109.13 Protection of containers is amended by deleting the Exception.

Section 6109.15.1 Automated cylinder exchange stations, Item 1, is replaced as follows:

1. The vending system shall only permit access to a single cylinder not to exceed 20 pounds (9.07 kg) per individual transaction.

Section 6112 Fixed, Mobile, or Temporary Concessions Protections is added as follows:

SECTION 6112
FIXED, MOBILE, OR TEMPROARY CONCESSIONS PROTECTIONS

6112.1 Required Installations. Cooking equipment used in fixed, mobile, or temporary concessions, such as trucks, buses, trailers, and structures shall be limited to two 40-pound cylinders (maximum). All Department of Transportation cylinders shall have an overfill protection device (OPD) installed. Properly installed ASME tanks do not require an OPD (Overfill Protection Device).

Exception: Where fixed structures are governed by the *Denver Mechanical Code*, *Denver Commercial Building Code* and *Denver Fuel Gas Code*.

6112.1.1 Cooking equipment. Listed and labeled for the intended application. The equipment shall be installed in accordance with NFPA 58 and this Chapter.

6112.1.2 Cylinder. Shall be mounted to prevent jarring loose, slipping, rotating, or any damage to the tank. The brackets and fastenings shall be designed and constructed to withstand any movement of the LPG tank.

6112.1.3 Piping. All piping shall be installed, tested and inspected in accordance with NFPA 58 and this Chapter.

CHAPTER 63
OXIDIZERS, OXIDIZING GASES AND OXIDIZING CRYOGENIC FLUIDS

SECTION 6301
GENERAL

Section 6301.3 Oxygen coordinator or oxygen supply and delivery personnel is added as follows:

6301.3 Oxygen coordinator or oxygen supply and delivery personnel. All home oxygen coordinators and oxygen supply and delivery personnel must successfully pass the written test administered by the Denver Fire Department and be issued a Denver Fire Department license. The home oxygen coordinator and oxygen supply and delivery personnel for residential settings where oxygen is used shall be required to ask the recipient a series of Denver Fire Department prepared questions to assess the fire risk potential of the dwelling. This questionnaire is available from the Denver Fire Department. The home oxygen coordinator or oxygen supply and delivery personnel shall demonstrate to the patient the proper use techniques, instructions in safe use of the equipment, and provide educational and/or warning information for patients and caregivers on the hazards of smoking while oxygen is in use. The home oxygen coordinator or oxygen supply and delivery personnel shall submit the completed questionnaire to the Denver Fire Department.

CHAPTER 80
REFERENCED STANDARDS

Chapter 80 REFERENCED STANDARDS is amended as follows:

ASHRAE 15-2019 is replaced as follows:

15-~~2019~~2022 Safety Standard for Refrigeration Systems including addendum a through ~~t~~ab

NFPA Standards listed in Chapter 80 are replaced as follows:

NFPA National Fire Codes Set – 2022 Edition Volumes 1 through 15
(unless specifically noted otherwise below)

NFPA 13— 2022 Edition

NFPA 13D— 2022 Edition

NFPA 13R— 2022 Edition

NFPA 14— 2019 Edition

NFPA 20— 2022 Edition

NFPA 70—as adopted by State of Colorado

NFPA 72— 2022 Edition

The following documents are NFPA recommendations and do not serve as standards for the City and County of Denver.

1000 Fire Service Professional Qualifications Accreditation and Certification System - 2022
1061 Public Safety Telecommunicator Qualifications - 2018
1201 Providing Emergency Services to the Public - 2020
1250 Emergency Service Organization Risk Management - 2020
1500 Fire Department Occupational Safety and Health Program – 2021
1561 Emergency Services Incident Management System - 2020
1581 Fire Department Infection Control Program - 2022
1582 Medical Programs for Fire Departments - 2022
1583 Health-Related Fitness for Fire Department Members - 2022
1710 Career Fire Departments, Organization and Deployment - 2020

Addition: Reference the following standards:

ANSI	American National Standards Institute 25 W 43rd Street, Fourth Floor New York, NY 13045
A10-4 – 2016	Safety Requirements for Personnel Hoists and Employee Elevators
~~ANSI/ASHRAE 15 – 2004~~	~~Safety for Refrigeration Systems~~
ASCE	American Society of Civil Engineers 101 Constitution Avenue NW Washington, D.C. 20001
ASCE 21 – as adopted by State of CO	Automated People Mover Standards (as adopted by the State of Colorado - Parts 1 through 4, as amended by ASCE)
ASME	American Society of Mechanical Engineers Three Park Avenue New York, NY 10016-5990
ASME A17.1/CSA B44	Safety Code for Elevators and Escalators (as adopted by the State of Colorado)
ASME A17.3	Safety Code for Existing Elevators and Escalators (as adopted by the State of Colorado)
ASME A18.1	Safety Standard for Platform Lifts and Stairway Chair Lifts (as adopted by the State of Colorado)
ASME A90.1 – 2009	Safety Standard for Belt Manlifts
ASME B20.1 – 2012	Safety Standard for Conveyors and Related Equipment
ASME B31 – 2016	Standard for Pressure Piping
Chlorine Manual 6th printing — 2000	National Chlorine Institute 1300 Wilson Boulevard, Suite 525 Arlington, VA 22209

Addition: Reference the following standard:

Institute of Makers of Explosives	Institute of Makers of Explosives1575 Street N.W., Suite #550 Washington, D.C. 20005

Pamphlet 1 Construction Guide for Storage Magazines - 2006

Pamphlet 3 Suggested Code Regulations - 2003

Handbook for the Transportation and Distribution of Explosive Materials - 2007

Pamphlet 17 Safety in the Transportation, Storage, Handling and Use of Explosives - 2007

Pamphlet 20 Safety Guide for the Prevention of Radio Frequency Radiation Hazards in the Use of Electric Blasting Caps – 2001

Pamphlet 21 Destruction of Commercial Explosives

Pamphlet 22(b) IME Standard for the Safe Transportation of Class C Detonators (Blasting Caps) in a Vehicle with Certain Other Explosives (1995)

Pamphlet 23 Recommendations for the Transportation of Explosives, Division 1.5, Ammonium Nitrate, Emulsion, Division 5.1, Combustible Liquids, Class 3, and Corrosives, Class 8 in Bulk Packaging - 2007

INTERNATIONAL FIRE CODE APPENDICES
STATUS OF APPENDICES ON ADOPTION

Appendices are Added, Adopted, Adopted as Amended, or Not Adopted as part of this code as Provisions in Appendices that are added, adopted, or adopted as amended carry the full weight and mandatory enforceability of the Code.

APPENDIX	TITLE	STATUS
A	Board of Appeals	Not Adopted
B	Fire-flow Requirements for Buildings	Adopted as Amended
C	Fire Hydrant Locations and Distribution	Adopted as Amended
D	Fire Apparatus Access Roads	Not Adopted
E	Hazard Categories	Not Adopted
F	Hazard Ranking	Adopted
G	Cryogenic Fluids—Weight and Volume Equivalents	Not Adopted
H	Hazardous Materials Management Plan (HMMP)	Not Adopted
I	Fire Protection Systems—Noncompliant Conditions	Not Adopted
J	Building Information Sign	Not Adopted
K	Construction Requirements for Existing Ambulatory Care Facilities	Not Adopted
L	Requirements for Fire Fighter air Replenishment systems	Not Adopted
M	High-rise Buildings – Retroactive Automatic sprinkler Requirements	Not Adopted
N	Indoor Trade Shows and Exhibitions	Not Adopted
O	Shop Drawing and System Graphic Requirements for Permit Application	Added

APPENDIX B
FIRE-FLOW REQUIREMENTS FOR BUILDINGS

SECTION B104
FIRE-FLOW CALCULATION AREA

Section B104.1 General is replaced as follows:

B104.1 General. The fire-flow calculation area shall be the total area of all floor levels within the exterior walls, and under the horizontal projections of the roof of a building, except as modified in Section B104.3 of the *International Fire Code*. In buildings with mixed construction types as defined in *the International Building Code*, the fire-flow calculations shall follow the method described in the *2021 International Fire Code Commentary* for Table B105.1(2).

Section B104.2.1 Townhouses is added as follows:

B104.2.1 Townhouses. Where buildings are constructed as *townhouses* in accordance with the *International Residential Code*, each separate *townhouse unit* shall be considered a *fire-flow calculation area*, with *fire flow* determined for the largest unit.

Exception: *Townhouses* constructed in accordance with the *International Building Code*.

Section B104.4 is added as follows:

Section B104.4 Fire Flow Data. For new building construction or addition, each set of construction drawings submitted for permit shall contain the required fire flow calculation as follows:

Fire Flow Data Block

TOTAL FIRE FLOW REQUIRED FOR THIS SITE IS _____ GPM MINIMUM @ 20 PSI RESIDUAL PRESSURE.

THIS FLOW MUST BE PROVIDED FROM A MINIMUM OF _____ FIRE HYDRANTS.
EACH FIRE HYDRANT SHALL SUPPLY A MINIMUM OF 1500 GPM @ 20 PSI RESIDUAL PRESSURE AT THE HYDRANT OUTLET TO BE ACCEPTABLE.

CODE USED FOR ANALYSIS: 2021 IFC WITH 2022 AMENDMENTS
OCCUPANCY GROUP(S):
CONSTRUCTION TYPE(S):
FIRE FLOW CALCULATION AREA (IF MIXED CONSTRUCTION, PROVIDE CALCULATIONS):
THIS BUILDING **IS/IS NOT** FULLY PROTECTED WITH AN AUTOMATIC SPRINKLER SYSTEM.

SECTION B105
FIRE-FLOW REQUIREMENTS FOR BUILDINGS

Section B105.1 One- and two-family dwellings, Group R-3 and R-4 buildings and townhouses is replaced as follows:

B105.1 One-and-two-family dwellings, Group R-3 and R-4 buildings and townhouses. The minimum fire flow and flow duration for one- and two-family dwellings, Group R-3 and R-4 buildings and townhouses shall be as specified in Table B105.1(2). All hydrants, new and/or existing shall flow no less than 1,500 gpm with a minimum residual pressure of 20 psi.

Table B105.1(1) is deleted.

Section B105.2 Buildings other than one- and two-family dwellings is replaced as follows:

B105.2 Buildings other than one- and two-family dwellings. The minimum fire flow and flow duration for buildings other than one- and two-family dwellings shall be as specified in Table B105.1(2).

Exception: A reduction in required fire flow of up to 50 percent, as *approved*, is allowed when the building is protected throughout with an automatic fire sprinkler system installed in accordance with NFPA 13 or NFPA 13R. The resulting fire flow shall not be less than 1,500 gallons per minute (5,678 L/min) for the prescribed duration as specified in Table B105.1(2). All hydrants, new and/or existing shall flow no less than 1,500 gpm with a minimum residual pressure of 20 psi.

Table B105.2 is deleted.

APPENDIX C
FIRE HYDRANT LOCATIONS AND DISTRIBUTION

International Fire Code Appendix C Table C102.1, Footnotes f and g are deleted.

Section C106 is added as follows:

SECTION C106
WATER MAINS SERVING FIRE HYDRANTS

C106.1 Water mains serving fire hydrants. Water mains supplying fire hydrants, fire protection systems, and building fire flows shall be sized to provide fire flows for required fire hydrants. Water mains supplying fire hydrants shall be installed as required by the Denver Water Department *Operating Rules and Engineering Standards* unless specifically approved by the Denver Water Department.

APPENDIX O SHOP DRAWING SUBMITTAL REQUIREMETNS FOR CONSTRUCTION PERMITS REQUIRED BY SECTION 105.6 is added as follows:

APPENDIX O
SHOP DRAWING SUBMITTAL REQUIREMENTS FOR CONSTRUCTION PERMITS

SECTION O101
GENERAL

O101.1 General. Visit the Denver Fire Department online portal for Policy Appendix O for the most current requirements.

END OF 2022 DENVER FIRE CODE