CITY AND COUNTY OF DENVER

STATE OF COLORADO

DENVER
THE MILE HIGH CITY

DEPARTMENT OF PUBLIC WORKS

Bid Form Package

Contract Number: 201845992

2018 Directional Boring

Master On-Call

September 25, 2018

DENVER
THE MILE HIGH CITY

NOTICE OF APPARENT LOW BIDDER

Global Underground Corporation
641 Winters Dr.
Colorado Springs, CO 80907

The EXECUTIVE DIRECTOR OF PUBLIC WORKS has considered the Bids submitted on **October 25, 2018,** for work to be done and materials to be furnished in and for:

Contract No. 201845992
2018 Directional Boring Master On-Call

as set forth in detail in the Contract Documents for the City and County of Denver, Colorado. It appears that your Bid is fair, equitable, and to the best interest of the City and County; therefore, said Bid is hereby accepted at the bid price contained herein, subject to the approval and execution of the Contract Documents by the City in accordance with the Charter of the City and County of Denver, and to your furnishing the items specified below. The award is based on the total bid items: **bid item numbers (202-00200 through 699-00010) which includes Fifty Six (56) total bid items,** the total estimated cost thereof being: **Three Million One Hundred Thousand Fifteen Dollars and Zero Cents ($3,100,015.00).**

It will be necessary for you to appear forthwith at the office of the Department of Public Works, Contract Administration, 201 W. Colfax Ave., Dept 614, Denver, Colorado 80202, to receive the said Contract Documents, execute the same and return them to the Department of Public Works, Contract Administration within the time limit set forth in the Bid Package Documents.

In accordance with the requirements set forth in the Contract Documents, you are required to furnish the following documents:

a. Insurance Certificates: General Liability and Automotive Liability, Workman's Compensation and Employer Liability;
b. Payment and Performance Bond along with One Original Power of Attorney relative to Performance and/or Payment Bond; and,

All construction Contracts made and entered into by the City and County of Denver are subject to Affirmative Action and Equal Opportunity Rules and Regulations, as adopted by the Manager of Public Works, and each contract requiring payment by the City of one-half million dollars ($500,000.00) or more shall first be approved by the City Council acting by ordinance and in accordance with Section 3.2.6 of the Charter of the City and County of Denver.

Prior to issuance of Notice to Proceed, all Equal Opportunity requirements must be completed. Additional information may be obtained by contacting the Director of Contract Compliance at (720-913-1700).

DENVER
THE MILE HIGH CITY

NOTICE OF APPARENT LOW BIDDER
CONTRACT NO. 201845992
Page 2

The Bid Security submitted with your Bid, will be returned upon execution of the Contract and furnishing of the Performance Bond. In the event you should fail to execute the Contract and to furnish the performance Bond within the time limit specified, said Bid Security will be retained by the City and County of Denver as liquidated damages, and not as a penalty for the delay and extra work caused thereby.

Dated at Denver, Colorado this 19th day of November 2018.

CITY AND COUNTY OF DENVER

By _____
Eulois Cleckley
Executive Director of Public Works

cc: Kristen Moore (CAO), Treasury (taxaudadmin@denvergov.org), Imogene Manuelito, (DSBO), Beth Ashby, (PM), Prevailing Wage, File.

CITY AND COUNTY OF DENVER
DEPARTMENT OF PUBLIC WORKS

TABLE OF CONTENTS
FOR
BID FORM AND SUBMITTAL PACKAGE

Table of Contents	BF-1
Bidder's Checklist	BF-2 through BF-3
Bid Form and Submittal Package Acknowledgment Form	BF-4 through BF-5
Bid Form	BF-6 through BF-8
List of Proposed Minority/Woman Business Enterprise(s)	BF-9 through BF-12
Commitment to Minority/Woman Business Enterprise Participation	BF-13
Minority/Woman Business Enterprise Letter(s) of Intent & Checklist	BF-14 through BF-15
Joint Venture Affidavit	BF-16
Joint Venture Eligibility Form	BF-17 through BF-19
Bid Bond	BF-20
Diversity and Inclusiveness in City Solicitations Form	BF-21 through BF-24

BIDDER'S CHECKLIST

This Checklist is provided solely for the assistance of the bidders, and need not be returned by Bidders with your BID FORM PACKAGE.

These forms comprise the Bid Form and Submittal Package. Designated forms must be completed and turned in at the time of Bid Opening. Bidders should refer to the Contract Documents, particularly the Instructions to Bidders, accompanying this package, in completing these forms.

FORM/ PAGE NO.	COMMENTS	COMPLETE
BF-4 – BF-5	a.) Acknowledgment signature and attestation required.	☐
BF-6+	a.) Fill in individual bid item dollars and totals in Numerical figures only b.) Complete all blanks	☐ ☐
BF-7	a.) Write out bid total or bid totals in words and figures in the blank form space(s) provided b.) Calculate Textura® Construction Payment Management System Fee from chart on pg. BF-3 and write % and fee in the space provided	☐
BF-8	a.) List all subcontractors who are performing work on this project	☐
BF-9 – BF-10	a.) Fully complete List of Proposed Minority /Woman Business Enterprise Bidders, Subcontractors, Suppliers, Manufacturers, or Brokers – check appropriate boxes.	☐
BF-11	a.) Complete all blanks b.) If Addenda have been issued, complete bottom section.	☐ ☐
BF-12	a.) Complete appropriate sections - signature(s) required. b.) If corporation, then corporate seal required.	☐ ☐
BF-13	a.) Fully complete Commitment to Participation	☐
BF-16	a.) If applicable, fully complete Joint Venture Affidavit	☐
BF-17 – BF-19	a.) If applicable, fully complete Joint Venture Eligibility Form (Submit 10 days prior to Bid Opening Date)	☐
BF-20	a.) Fill in all Bid Bond blanks b.) Signatures required c.) Corporate Seal if required d.) Dated e.) Attach Surety Agents Power of Attorney or Certified or cashier's check made out to the Manager of Revenue referencing Bidder's Company and Contract Control Number.	☐ ☐ ☐ ☐ ☐
BF-21- BF-24	a.) Each bidder, as a condition of responsiveness to this solicitation, shall complete and return the "Diversity and Inclusiveness in City Solicitations Information Request Form" with their Bid.	☐

Textura ® Construction Payment Management System ("Textura")
Bidder recognizes and agrees that it shall be required to use the Textura® Construction Payment Management System ("Textura") for this Project to request payment from the City and to pay subcontractors. All certified subcontractors or suppliers who are listed for participation towards any assigned program goal must be paid via Textura. All fees associated with Textura are to be paid by the bidder for billings for work performed. Bidders are required, when preparing a bid, to enter the price of Textura on the line provided for the service. The fee is all inclusive of all subcontractor, project and subscription fees associated with Textura. The bidder will calculate the fee based on a percentage of their total bid, and then include it on the line item provided in the bid form labeled **"Textura® Construction Payment Management System Fee"**. This expense becomes part of the contract and billable to the City. All costs including, but not limited to, costs associated with training, entering data, and/or utilizing Textura other than the Textura Construction Payment Management System Fee are overhead and shall not be reimbursed by the City. Bidder will be responsible for any tax on the Textura fee. As with other taxes, the City will not reimburse bidder for this cost and therefore this cost should be included in bidder's bid. Textura will invoice the awarded bidder directly.

Project Value	Project Fee (GC + Sub Usage)
$250,000 - $499,999.99	$1,625
$500,000 - $999,999.99	$3,250
$1,000,000 - $2,999,999.99	$5,850
$3,000,000 - $4,999,999.99	$9,100
$5,000,000 - $9,999,999.99	$12,220
$10,000,000 - $19,999,999.99	$20,345
$20,000,000 - $49,999,999.99	$32,500
$50,000,000 - $99,999,999.99	$48,750
$100,000,000 - $199,999,999.99	$69,095
$200,000,000 - $299,999,999.99	$85,345
$300,000,000 - $399,999,999.99	$109,720
$400,000,000 - $499,999,999.99	$142,220
$500,000,000 - $999,999,999.99	$162,500
$1,000,000,000 - $1,999,999,999.99	$345,345
$2,000,000,000 - $4,999,999,999.99	$650,000
$5,000,000,000 - $9,999,999,999.99	$1,015,625
$10,000,000,000 or greater	$1,503,125

For more information:
http://www.denvergov.org/constructioncontracts/ContractAdministration/BiddingProcess/TexturaPaymentSystem/tabid/443165/Default.aspx

CITY AND COUNTY OF DENVER
DEPARTMENT OF PUBLIC WORKS

BID FORM AND SUBMITTAL PACKAGE ACKNOWLEDGMENT

CONTRACT NO. 201844649

2018 Directional Boring Master On-Call

BIDDER: Global Underground Corporation
(Legal Name per Colorado Secretary of State)

ADDRESS: Global Underground Corporation
641 Winters Drive
Colorado Springs, CO 80907

The undersigned bidder states that the undersigned bidder has received and had an opportunity to fully and thoroughly examine a complete set of the Contract Documents for **Contract No. 201844649,** made available to the undersigned bidder pursuant to Notice of Invitation for Bids dated **September 25, 2018.**

The undersigned bidder acknowledges that a complete and final set of the Contract Documents for the referenced Project, the components of which are identified below, are bound and maintained as the record set of Contract Documents by the Contract Administration Division of the Department of Public Works and that this Record Set is available for examination by the undersigned bidder.

The undersigned bidder, having thoroughly examined each of the components identified below and contained in Contract Documents, HEREBY SUBMITS THIS BID FORM AND SUBMITTAL PACKAGE, fully understanding that the Contract Documents, as defined in Paragraph 1 of the contract, including this executed Bid Form and Submittal Package, constitute all of the terms, conditions and requirements upon which this submission is based and further understanding that, by submission of this Bid Form and Submittal Package, the City shall rely on the representations and commitments of the undersigned bidder contained herein.

The following completed documents comprising this Bid Form and Submittal Package will be included with and, by this reference, are expressly incorporated into the Contract Documents specified at Paragraph 1 of the Contract:

Bid Form and Submittal Package Acknowledgment Form
Bid Form
List of Proposed Minority/Woman Owned Business Enterprise(s)
Commitment to Minority/Woman Business Enterprise Participation
M/WBE Letter(s) of Intent
Joint Venture Affidavit (if applicable)
Joint Venture Eligibility Form (if applicable)
Bid Bond
Certificate of Insurance

The following designated documents constitute that portion of the Contract Documents made available by the Notice of Invitation for Bids, but not included in the Bid Form and Submittal Package:

Notice of Invitation for Bids
Instructions to Bidders
Addenda (as applicable)
Equal Employment Opportunity Provisions (Appendix A and Appendix F)
Contract Form
General Contract Conditions
Special Contract Conditions
Performance and Payment Bond
Notice to Apparent Low Bidder
Notice to Proceed
Contractor's Certification of Payment Form
Final/Partial Lien Release Form
Final Receipt
Change Orders (as applicable)
Federal Requirements (as applicable)
Prevailing Wage Rate Schedule(s)
Technical Specifications
Contract Drawings
Accepted Shop Drawings

The undersigned bidder expressly assumes responsibility for the complete contents of these designated documents as bound together with the Bid Form and Submittal Package submitted herewith and designated the Contract Documents.

IN WITNESS WHEREOF, the undersigned bidder has signed personally or by duly authorized officer or agent and duly attested.

BIDDER:

Name: Robert Powilleit

By: _____

Title: Vice President

ATTEST:

By: _____

[SEAL]

CITY AND COUNTY OF DENVER
DEPARTMENT OF PUBLIC WORKS

BID FORM

CONTRACT NO. 201844649
2018 Directional Boring Master On-Call

BIDDER Global Underground Corporation
(Legal Name per Colorado Secretary of State)

TO: The Manager of Public Works
City and County of Denver
c/o Contract Administration
201 West Colfax, Dept. 614
Denver, Colorado 80202

The Undersigned Bidder, having examined the plans, technical specifications, and remainder of the proposed Contract Documents as designated and enumerated in the General and Special Contract Conditions and any and all addenda thereto; having investigated the location of and conditions affecting the proposed Work; and being acquainted with and fully understanding the extent and character of the Work covered by this bid, and all factors and conditions affecting or which may be affected by Work, HEREBY SUBMITS THIS BID, pursuant to an advertisement of a Notice of Invitation for Bids as published on September 25, 2018, to furnish all required materials, tools, appliances, equipment and plant; to perform all necessary labor and to undertake and complete: **CONTRACT NO. 201844649,** in Denver, Colorado, in full accordance with and conformity to the Plans, Technical Specifications, and Contract Documents hereto attached or by reference made a part hereof, at and for the following price(s) set forth on this Bid Form.

The following documents, which taken as a whole constitute the Contract Documents for this Project, and which are incorporated herein, by reference, were made available to the Bidder as provided in the Advertisement of Notice of Invitation for Bids, were received by the bidder, and form the basis for this bid:

Advertisement of Notice of Invitation for Bids
Instructions to Bidders
Commitment to M/WBE Participation
Article III, Division 1 and 3 of Chapter 28, D.R.M.C.
Bid Bond
Addenda (as applicable)
Equal Employment Opportunity Provisions (Appendix A and Appendix F)
Bid Form
Contract Form
General Contract Conditions
Special Contract Conditions
Performance and Payment Bond
Notice to Apparent Low Bidder
Notice to Proceed
Contractor's Certification of Payment Form
Final/Partial Lien Release Form
Final Receipt
Change Orders (as applicable)
Federal Requirements (as applicable)
Prevailing Wage Rate Schedule(s)
Technical Specifications
Contract Drawing
Accepted Shop Drawings

Item No.	Description and Price	Estimated Quantity	Estimated Cost
202-00200	**Removal of Sidewalk** at the unit price of $ 25.00 per SQUARE FOOT.	6,000 SF	$ 150000.00
202-00220	**Removal of Asphalt Mat** at the unit price of $ 30.00 per SQUARE FOOT.	600 SF	$ 18000.00
202-00856	**Removal of Traffic signal cabinet base** at the unit price of $ 1850.00 per EACH.	10 EA	$ 18500.00
203-01597	**Potholing** at the unit price of $ 285.00 per EACH.	1,700 EA	$ 484500.00
208-00002	**Erosion Log (12 Inch)** at the unit price of $ 6.25 per LINEAR FOOT.	1,300 LF	$ 8125.00
208-00045	**Concrete Washout Structure** at the unit price of $ 625.00 per EACH.	50 EA	$ 31250.00
208-00050	**Storm Drain Inlet Protection** at the unit price of $ 310.00 per EACH.	200 EA	$ 62000.00
208-00205	**Erosion Control Supervisor** at the unit price of $ 75.00 per HOURLY RATE.	125 HR	$ 9375.00
211-03005	**Dewatering** at the unit price of $ 50.00 per EACH.	140 EA	$ 7000.00
212-01200	**Landscape Restoration** at the unit price of $ 4.50 per SQUARE FOOT.	6,000 SF	$ 27000.00
403-00721	**Hot Mix Asphalt (Patching) (Asphalt)** at the unit price of $ 74.00 per SQUARE YARD.	120 SY	$ 8880.00
604-39050	**Manhole(Type A)(6'x6')** at the unit price of $ 8000.00 per EACH.	2 EA	$ 16000.00
607-11525	**Fence (Plastic)** at the unit price of $ 4.00 per LINEAR FOOT.	6,000 LF	$ 24000.00

Item No.	Description and Price	Estimated Quantity	Estimated Cost
608-00000	**Concrete Sidewalk** at the unit price of $ 12.00 per SQUARE FOOT.	5,500 SF	$ 66000.00
608-00005	**Concrete Sidewalk (Special)** at the unit price of $ 30.00 per SQUARE FOOT.	100 SF	$ 3000.00
613 -00310	**3 Inch Electrical Conduit (Trenched)** at the unit price of $ 6.00 per LINEAR FOOT.	350 LF	$ 2100.00
613-00003	**Boring Pit - Small (3'x3'x3')** at the unit price of $ 450.00 per EACH.	20 EA	$ 9000.00
613-00005	**Boring Pit - Large (5'x5'x6')** at the unit price of $ 650.00 per EACH.	200 EA	$ 130000.00
613-00206	**2 Inch Electrical Conduit (Bored)** at the unit price of $ 15.00 per LINEAR FOOT.	900 LF	$ 13500.00
613-00209	**2 Inch Electrical Conduit (Trenched)** at the unit price of $ 6.00 per LINEAR FOOT.	350 LF	$ 2100.00
613-00306	**3 Inch Electrical Conduit (Bored)** at the unit price of $ 20.00 per LINEAR FOOT.	35,000 LF	$ 700000.00
613-00307	**Two 3 Inch Electrical Conduit (Bored)** at the unit price of $ 30.00 per LINEAR FOOT.	3,500 LF	$ 105000.00
613-00308	**Three 3 Inch Electrical Conduit (Bored)** at the unit price of $ 45.00 per LINEAR FOOT.	100 LF	$ 4500.00
613-00309	**One 2 Inch and Two 3 Inch Electrical Conduit (Bored)** at the unit price of $ 35.00 per LINEAR FOOT.	3,500 LF	$ 122500.00
613-00408	**4 Inch Electrical Conduit (Bored)** at the unit price of $ 22.00 per LINEAR FOOT.	100 LF	$ 2200.00
613-00603	**6 Inch Electrical Conduit (Bored)** at the unit price of $ 40.00 per LINEAR FOOT.	100 LF	$ 4000.00

Item No.	Description and Price	Estimated Quantity	Estimated Cost
613-04030	**Proof Conduit (3-man labor crew)** at the unit price of $ 1.50 per LINEAR FOOT.	3,000 LF	$ 4500.00
613-04031	**Conduit and Fiber Repair (3-man labor crew)** at the unit price of $ 425.00 per HOURLY RATE.	200 HR	$ 85000.00
613-07023	**Pull Box (Type C)(36"x24"x24")** at the unit price of $ 1275.00 per EACH.	300 EA	$ 382500.00
613-07199	**Pull Box (Type A and B)** at the unit price of $ 300.00 per EACH.	50 EA	$ 15000.00
613-07201	**Pull Box (Type D)(30"x48"x18")** at the unit price of $ 450.00 per EACH.	20 EA	$ 9000.00
614- 75830	**Traffic signal cabinet base (concrete)** at the unit price of $ 850.00 per EACH.	5 EA	$ 4250.00
614-75835	**Traffic Signal Cabinet base (pre-fab)** at the unit price of $ 450.00 per EACH.	10 EA	$ 4500.00
614-87401	**Fiber Optic Cable (Denver Hybrid)(12x12 Strands)** at the unit price of $ .65 per LINEAR FOOT.	5,000 LF	$ 3250.00
614-87402	**Fiber Optic Cable (Denver Hybrid)(36x12 Strands)** at the unit price of $ .75 per LINEAR FOOT.	5,000 LF	$ 3750.00
614-87403	**Fiber Optic Cable (Denver Hybrid)(60x12 Strands)** at the unit price of $ 1.15 per LINEAR FOOT.	5,000 LF	$ 5750.00
614-87404	**Fiber Optic Cable (Denver Hybrid)(120x24 Strands)** at the unit price of $ 1.75 per LINEAR FOOT.	2,500 LF	$ 4375.00

Item No.	Description and Price	Estimated Quantity	Estimated Cost
614-87424	**Fiber Optic Cable (Single Mode) (24 Strands)** at the unit price of $ .55 per LINEAR FOOT.	5,000 LF	$ 2750.00
614-87425	**Fiber Optic Cable (Multi Mode) (12 Strands)** at the unit price of $ .60 per LINEAR FOOT.	100 LF	$ 60.00
614-87426	**Fiber Optic Cable (Single Mode) (12 Strands)** at the unit price of $ .65 per LINEAR FOOT.	10,000 LF	$ 6500.00
614-87427	**Fiber Optic Cable (Single Mode) (48 Strands)** at the unit price of $ .85 per LINEAR FOOT.	5,000 LF	$ 4250.00
614-87428	**Fiber Optic Cable (Single Mode) (72 Strands)** at the unit price of $ .95 per LINEAR FOOT.	5,000 LF	$ 4750.00
614-87429	**Fiber Optic Cable (Single Mode) (96 Strands)** at the unit price of $ 1.05 per LINEAR FOOT.	10,000 LF	$ 10500.00
614-87430	**Fiber Optic Cable (Single Mode) (144 Strands)** at the unit price of $ 1.45 per LINEAR FOOT.	5,000 LF	$ 7250.00
614-87650	**Pull Fiber** at the unit price of $ .85 per LINEAR FOOT.	75,000 LF	$ 63750.00
614-87651	**Install Pull Tape in Existing Conduit** at the unit price of $ .55 per LINEAR FOOT.	3,000 LF	$ 1650.00
614-87652	**Copper Tracer Wire** at the unit price of $ .32 per LINEAR FOOT.	40,000 LF	$ 12800.00
623 -06901	**Traffic Valve Box (Install Only)** at the unit price of $ 150.00 per EACH.	10 EA	$ 1500.00

Item No.	Description and Price	Estimated Quantity	Estimated Cost
626-00000	**Mobilization** at the unit price of $ 950.00 per EACH.	50 EA	$ 47500.00
630-00003	**Uniformed Traffic Control** at the unit price of $ 125.00 per HOURLY RATE.	100 HR	$ 12500.00
630-00013	**Traffic Control Management** at the unit price of $ 85.00 per HOURLY RATE.	3,000 HR	$ 255000.00
630-80341	**Construction Traffic Sign (Panel Size A)** at the unit price of $ 55.00 per EACH.	150 EA	$ 8250.00
630-80342	**Construction Traffic Sign (Panel Size B)** at the unit price of $ 55.00 per EACH.	150 EA	$ 8250.00
630-80356	**Advance Warning Flashing or Sequencing Arrow Panel (A Type)** at the unit price of $ 1250.00 per EACH.	50 EA	$ 62500.00
630-80380	**36 Inch Traffic Cone** at the unit price of $ 7.50 per EACH.	1,500 EA	$ 11250.00
699-00010	**Railroad Permit Fee** at the unit price of $ 6500.00 per EACH.	3 EA	$ 19500.00

Bid Items Total Amount (202-00200 through 699-00010 (56 total bid items))	$ 3,090,915.00
Textura ® Fee from table on Page BF-3 (based on Bid Items Total Amount)	$ ~~650,000.00~~ 9,100.00 DA
Bid Items Total Amount plus Textura® Fee equals Total Bid Amount	$ ~~3,740,915.00~~ 3,100,015

Total Bid Amount One hundred thousand DA

Three million ~~seven hundred and forty thousand nine hundred and~~ fifteen dollars and zero cents

Dollars ($ ~~3,740,915.00~~ 3,100,015.00 **)** DA

If the Manager mails a written Notice of Apparent Low Bidder, addressed to the Bidder's business address stated on this Bid Form, the Undersigned Bidder shall, in accordance with the Contract Documents, be ready to, and shall, within five (5) days after the date of the Notice: (i) execute the attached form of Contract in conformity with this bid; (ii) furnish the required proofs of insurance; and (iii) furnish the required bond or bonds in the sum of the full amount of this bid, executed by a surety company acceptable to the Manager.

The Global Underground Corporation, a corporation of the State of Colorado, is hereby offered as Surety on said bond. If such surety is not approved by the Manager, another and satisfactory surety company shall be furnished.
Enclosed with this bid is a bid guarantee, as defined in the attached Instructions to Bidders, in the amount of 5%. The Undersigned Bidder agrees that the entire amount of this bid guarantee is to be paid to and become the property of the City as liquidated damages, and not as a penalty, if: (i) the bid is considered to be the best by the City; (ii) the City notifies the Undersigned Bidder that it is the Apparent Low Bidder; and (iii) the Undersigned Bidder fails to execute the Contract in the form prescribed or to furnish the required bond and proofs of insurance, within five (5) days after the date of such notification.

The following persons, firms or corporations are interested with the Undersigned Bidder in this bid:

Name: Employers Mutual Casualty Company (EMC) Name: _____

Address: PO Box 712, Des Moines, IA 50306 Address: _____

If there are no such persons, firms, or corporations, please so state in the following space:

The Undersigned Bidder proposes to subcontract the following Work in accordance with General Contract Conditions, Title 5, SUBCONTRACTS, and represents that, to the greatest degree practical, all subcontractors known at the time of bid submittal have been identified.

Item of Work	Percent (%) of Total; Work	Proposed Subcontractor and Address
Asphalt, Concrete Work	TBD	Chacon Paving Inc - 12005 Brighton Rd. Henderson, CO 80640
Erosion Control Management	TBD	ERA Environmental - POB 8492, Pueblo, CO 81008
Traffic Mangement	TBD	Legacy Traffic Mangement - 1390 S Cherokee St, Denver, CO 8022
Fiber Installation	TBD	Ranger Underground, LLC - 18 Jersey Ln, Colorado Springs, CO 80

(Copy this page if additional room is required.)

DENVER
OFFICE OF ECONOMIC DEVELOPMENT

List of Proposed MWBE Bidders, Subcontractors, Suppliers (Manufacturers) or Brokers

Office of Economic Development
Division of Small Business Opportunity
Compliance Unit
201 W. Colfax Ave. Dept. 907
Denver, CO 80202
Phone: 720-913-1999
DSBO@denvergov.org

City & County of Denver Contract No.: 201844649

The undersigned Bidder proposes to utilize all listed firms. The following MWBE(s) firms listed are **CURRENTLY** certified by the City and County of Denver. Only the level of MWBE participation listed at the bid opening will count toward satisfaction of the project goal. Only bona fide commisions may be counted for Brokers. MWBE prime bidders must detail their bid information below. Please copy and attach this page to list additional MWBE.

Prime Bidder

Business Name: Global Underground Corporation		
Address: 641 Winters Drive, Colorado Springs, CO 80907	Contact Person: Robert Powilleit	
Type of Service: Horizontal Directional Drilling	Dollar Amount: $:	Percent of Project: 80-95%

Certified MWBE Prime Bidder

Business Name:		
Address:	Contact Person:	
Type of Service:	Dollar Amount: $:	Percent of Project:

Subcontractors, Suppliers Manufacturers or Brokers (check one box)

X	Subcontractor (√)		Supplier (√)		Manufacturer (√)		Broker (√)

Business Name: Chacon Paving Inc		
Address: 12005 Brighton Rd. Henderson, CO 80640	Type of Service: Asphalt, Concrete	
Contact Person: Rafael Chacon	Dollar Amount: $:	Percent of Project:

X	Subcontractor (√)		Supplier (√)		Manufacturer (√)		Broker (√)

Business Name: ERA Environmental		
Address: POB 8492, Pueblo, CO 81008	Type of Service: Erosion Control Managment	
Contact Person: Emily Chamberlain	Dollar Amount: $:	Percent of Project:

X	Subcontractor (√)		Supplier (√)		Manufacturer (√)		Broker (√)

Business Name: Legacy Traffic Management, LLC		
Address: 1390 S Cherokee St. Denver, CO 80223	Type of Service: Traffic Mangement	
Contact Person: Patrick Cobbin	Dollar Amount: $:	Percent of Project:

Subcontractors, Suppliers Manufacturers or Brokers (check one box)							
X	Subcontractor (√)		Supplier (√)		Manufacturer (√)		Broker (√)
Business Name: Ranger Underground, LLC							
Address: 18 Jersey Ln. Colorado Springs, CO 80911					Type of Service: Fiber Installation		
Contact Person: Dave Bower					Dollar Amount: $:	Percent of Project:	
	Subcontractor (√)		Supplier (√)		Manufacturer (√)		Broker (√)
Business Name:							
Address:					Type of Service:		
Contact Person:					Dollar Amount: $:	Percent of Project:	
	Subcontractor (√)		Supplier (√)		Manufacturer (√)		Broker (√)
Business Name:							
Address:					Type of Service:		
Contact Person:					Dollar Amount: $:	Percent of Project:	
	Subcontractor (√)		Supplier (√)		Manufacturer (√)		Broker (√)
Business Name:							
Address:					Type of Service:		
Contact Person:					Dollar Amount: $:	Percent of Project:	
	Subcontractor (√)		Supplier (√)		Manufacturer (√)		Broker (√)
Business Name:							
Address:					Type of Service:		
Contact Person:					Dollar Amount: $:	Percent of Project:	
	Subcontractor (√)		Supplier (√)		Manufacturer (√)		Broker (√)
Business Name:							
Address:					Type of Service:		
Contact Person:					Dollar Amount: $:	Percent of Project:	
	Subcontractor (√)		Supplier (√)		Manufacturer (√)		Broker (√)
Business Name:							
Address:					Type of Service:		
Contact Person:					Dollar Amount: $:	Percent of Project:	

Bid Form & Submittal Package, Participation Page 1/07-dm

The undersigned Bidder hereby certifies that the aforementioned subcontractors and suppliers have full knowledge that their names have been offered as subcontractors and suppliers for the work, and the Bidder further certifies that the dollar amount of work to be performed by the aforementioned M/WBE(s) was furnished to the Bidder prior to the bid opening. The undersigned Bidder agrees that after the bid opening, it shall submit to the City an executed and completed W/MBE "Letter of Intent" in three working days (3) on each of its M/WBE subcontractors. The "Letter of Intent" form is contained in the Contract Documents.

The undersigned Bidder acknowledges the right of the City to reject any or all bids submitted, to waive informalities in bids and to re-advertise this Project for bids.

The undersigned certifies that it has carefully checked all works and figures and all statements made in these Bid Forms.

This bid is submitted upon the declaration that neither, I (we), nor, to the best of my (our) knowledge, none of the members of my (our) firm or company have either directly or indirectly entered into any agreement, participated in any collusion or otherwise taken any action in restraint of free competitive bidding in connection with this bid.

Business Address of Bidder: 641 Winters Drive

City, State, Zip Code: Colorado Springs, CO 80907

Telephone Number of Bidder: 719-471-7414 Fax No. 719-471-7494

Social Security or Federal Employer ID Number of Bidder: 84-1539524

Name and location of the last work of this kind herein contemplated upon which the Bidder was engaged:
Global Underground holds several Master On-call Contracts with Colorado Springs Utilities

For information relative thereto, please refer to:

Name: Glenn Machos

Title: Procurement Specialist

Address: 1825 S Hancock Expressway, MC 1825, Colorado Springs, CO 80903

The undersigned acknowledges receipt, understanding, and full consideration of the following addenda to the Contract Documents:

Addenda Number 1 Date 10.17.18

Addenda Number _____ Date _____

Addenda Number _____ Date _____

Dated this 25th day of October, 2018

CITY AND COUNTY OF DENVER
DEPARTMENT OF PUBLIC WORKS

CONTRACT NO.: 201844649
PROJECT NAME: 2018 Directional Boring Master On-call

ADDENDUM NO. 1 TO CONTRACT DOCUMENTS

Bidders are hereby instructed that the drawings, specifications, and other contract documents are modified, corrected, supplemented and/or superseded for the above-mentioned project as hereinafter described in the following attachments:

Special Conditions 19
The following language shall replace SC-19 in the contract documents:

"SC-19 PERFORMANCE AND PAYMENT BOND
Title 15 of the General Contract Conditions shall generally apply to this Contract as supplemented by the following:

A Performance and Payment Bond, in the form included in these Contract Documents, shall be furnished covering all Work performed hereunder. An initial bond in the amount of **Four hundred fifty thousand Dollars and No Cents ($450,000.00)** shall be provided at the time of Contract execution. As additional Work is authorized Contractor shall provide properly executed bond Change Riders, in the form included in these Contract Documents, in amount(s) not less than one hundred percent (100%) of all Work for which Final Settlement has not occurred."

Questions and Answers:

1. Will there be any requirements for an on-site environmental person (or a CABI) for the potholing or HDD work done under this contract (where subsurface debris or fill materials are being encountered) or will these services be provided by the City?
   A1. The City will take on the task. There will not be an environmental bid item on this contract, but if hazardous material is encountered, the Department of Public Health and Environment will be brought in to assess.

This **ADDENDUM** shall be attached to, become a part of, and be returned with the Bid Proposal.

Lesley B. Thomas
City Engineer

10.16.18
Date

The undersigned bidder acknowledges receipt of this Addendum. The Proposal submitted herewith is in accordance with the stipulations set forth herein.

Global Underground Corp
Contractor

ADDENDUM NO. 1

10.17.18
Date

Signature of Bidder:

If an Individual: N/A doing business

as _____.

If a Partnership: N/A

by: _____,General Partner.

If a Corporation: Global Underground Corporation

a Colorado, Corporation,

by: _____, its President.

Attest:

_____

Secretary (Corporate Seal)

If a Joint Venture, signature of all Joint Venture participants.

Firm: N/A

Corporation ( ), Partnership ( ) or ( ) Limited Liability Company

By:_____ (If a Corporation)
Attest:

Title:_____ _____

Secretary (Corporate Seal)

Firm: N/A

Corporation ( ), Partnership ( ) or ( ) Limited Liability Company

By:_____ (If a Corporation)
Attest:

Title:_____ _____

Secretary (Corporate Seal)

Firm: N/A

Corporation ( ), Partnership ( ) or ( ) Limited Liability Company

By:_____ (If a Corporation)
Attest:

Title:_____ _____

Secretary (Corporate Seal)

DENVER
OFFICE OF ECONOMIC DEVELOPMENT

Office of Economic Development
Division of Small Business Opportunity
Compliance Unit
201 W. Colfax Ave. Dept. 907
Denver, CO 80202
Phone: 720-913-1999
DSBO@denvergov.org

COMMITMENT TO MWBE PARTICIPATION

The undersigned has satisfied the MWBE participant requirements in the following manner (Please check the appropriate box):

☒ The Bidder/Proposer is committed to the minimum 4 % MWBE utilization on the project, and will submit Letters of Intent (LOI) for each subcontractor/subconsultant listed in the Bid Forms as follows:
Hard Bids: Three (3) business days after the bid opening.
Request for Proposals/Qualifications: With the proposal when due.
Compliance Plans: With each task/work order

☐ The Bidder/Proposer is unable to meet the project goal of _____% MWBE, but is committed to a minimum of _____% MWBE utilization on the project. The Bidder/Proposer understands that they must submit a detailed statement of their good faith effort under sealed bid procedures, as a matter of responsiveness, or with initial proposals, under contract negotiation procedures; or no later than three (3) days after bid opening as a matter of responsibility as in accordance with DRMC Section 28-62 and 28-67 of Ordinance 85 to the Division of Small Business Opportunity.

☐ The Bidder/Proposer is a certified MWBE in good standing with the City and is committed to self-perform a minimum of _____% of the work on the contract.

Bidder/Proposer (Name of Firm): Global Underground Corporation			
Firm's Representative (Please print): Robert Powilleit			
Signature (Firm's Representative):			
Title: Vice President			
Address: 641 Winters Drive			
City: Colorado Springs		State: CO	Zip: 80907
Phone: 719.471.7414	Fax: 719.471.7494	Email: rpowilleit@globalug.com	

A copy of the MWBE Certification letter must be attached to each Letter of Intent (LOI).

DENVER
OFFICE OF ECONOMIC DEVELOPMENT

Office of Economic Development
Division of Small Business Opportunity
Compliance Unit
201 West Colfax Ave., Dept. 907
Denver, CO 80202
Phone: 720-913-1999

LETTER OF INTENT (LOI)

INSTRUCTIONS FOR COMPLETION & SUBMISSION:

- *All lines must be completed or marked N/A for Not Applicable*
- *Certification Letter must be submitted with LOI*
- *Submit the attached completed checklist with this letter*
- *Email to dsbo@denvergov.org ,*
- ***FOR RFPs and RFQs: LOIs should be included with Submittal***

Contract No.: 201844649	**Project Name:** 2018 Directional Boring Master On-Call

A. The Following Section Is To Be Completed by the Bidder/Consultant
This Letter of Intent Must be Signed by the Bidder/Consultant and M/WBE, SBE, EBE or DBE

Name of Bidder/Consultant: Global Underground Corp	Self-Performing: ☒ Yes ☐ No	Phone: 719-471-7414	
Contact Person: Robert Powilleit	Email: rpowilleit@globalug.com	Fax: 719-471-7494	
Address: 641 Winters Drive	City: Colorado Springs	State: CO	Zip: 80907

B. The Following Section Is To Be Completed by the M/WBE, SBE, EBE or DBE, at any Tier
This Letter of Intent Must be Signed by the M/WBE, SBE, EBE or DBE and Bidder/Consultant

Name of Certified Firm: Legacy Traffic Management		Phone: 720.708.6334	
Contact Person: Jesse Leonard	Email: jesse@legacytraffic.net	Fax:	
Address: 1390 S Cherokee St	City: Denver	State: Co	Zip: 80223

Please check the designation which applies to the certified firm.	M/WBE (√)	X	SBE (√)	X	EBE (√)	X	DBE (√)	X

Indirect Utilization: If this M/WBE, SBE, EBE or DBE is not a direct first tier subcontractor/subconsultant, supplier or broker to the Bidder/ Consultant, please indicate the name of the subcontractor/subconsultant, supplier or broker which is utilizing the participation of this firm:

A Copy of the M/WBE, SBE, EBE or DBE Letter of Certification must be Attached

Identify the scope of the work to be performed or supply item that will be provided by the M/WBE/SBE/DBE. **On unit price bids only, identify which bid line items the M/WBE/SBE/EBE/DBEs scope of work or supply corresponds to.**

Traffic Control

	Subcontractor/Subconsultant (√)		Supplier (√)		Broker (√)

Bidder intends to utilize the aforementioned M/WBE, SBE, EBE or DBE for the Work/Supply described above. The cost of the work and percentage of the total subcontractor M/WBE, SBE, EBE or DBE bid amount is:

$ 208,000.00	6.7 %
Consultant intends to utilize the aforementioned M/WBE, SBE, EBE or DBE for the Work/Supply described above. The percentage of the work of the total sub consultant M/WBE, SBE, EBE or DBE will perform is:	N/A %
If the fee amount of the work to be performed is requested, the fee amount, is:	$ N/A

Bidder/Consultant's Signature:	Date: 10.30.18
Title: Vice President	
M/WBE, SBE, EBE or DBE or Self-Performing Firm's Signature: Jesse Leonard	Date: 10/26/2018
Title: Owner	

If the above named Bidder/Consultant is not determined to be the successful Bidder/Consultant, this Letter of Intent shall be null and void.

DENVER
OFFICE OF ECONOMIC DEVELOPMENT

Office of Economic Development
Division of Small Business Opportunity
Compliance Unit
201 West Colfax Ave. Dept. 207
Denver, CO 80202
Phone 720-913-1999

LETTER OF INTENT (LOI)

INSTRUCTIONS FOR COMPLETION & SUBMISSION.

- All lines must be completed or marked N/A for Not Applicable
- Certification Letter must be submitted with LOI
- Submit the attached completed checklist with the letter
- Email to osbo@denvergov.org
- FOR RFPs and RFQs: LOIs should be included with Submittal

Contract No.: 201844649	Project Name: 2018 Directional Boring Master On-Call

A. The Following Section Is To Be Completed by the Bidder/Consultant
This Letter of Intent Must be Signed by the Bidder/Consultant and M/WBE, SBE, EBE or DBE

Name of Bidder/Consultant: Global Underground Corp	Self-Performing: ☐ Yes ☒ No	Phone: 719-471-7414	
Contact Person: Robert Powilleit	Email: rpowilleit@globalug.com	Fax: 719-471-7494	
Address: 641 Winters Drive	City: Colorado Springs	State: CO	Zip: 80907

B. The Following Section is To Be Completed by the M/WBE, SBE, EBE or DBE, at any Tier
This Letter of Intent Must be Signed by the M/WBE, SBE, EBE or DBE and Bidder/Consultant

Name of Certified Firm: Era Environmental		Phone: 719-324-0519	
Contact Person: Emily Chamberlain	Email: [illegible]	Fax: none	
Address: PO Box 8492	City: Pueblo	State: CO	Zip: 81005

Please check the designation which applies to the certified firm.	M/WBE ( )	✓	SBE ( )	✓	EBE ( )	✓	DBE ( )	✓

Indirect Utilization: If this M/WBE, SBE, EBE or DBE is not a direct first tier subcontractor/subconsultant, supplier or broker to the Bidder/Consultant, please indicate the name of the subcontractor/subconsultant, supplier or broker which is utilizing the participation of this firm:

A Copy of the M/WBE, SBE, EBE or DBE Letter of Certification must be Attached

Identify the scope of the work to be performed or supply item that will be provided by the M/WBE/SBE/DBE. **On unit price bids only, identify which bid line items the M/WBE/SBE/EBE/DBEs scope of work or supply corresponds to.**

environmental consulting, stormwater management, erosion control, water quality monitoring testing - reporting, BMP, inspections

X	Subcontractor/Subconsultant (✓)	✓	Supplier (✓)		Broker (✓)

Bidder intends to utilize the aforementioned M/WBE, SBE, EBE or DBE for the Work/Supply described above. The cost of the work and percentage of the total subcontractor M/WBE, SBE, EBE or DBE bid amount is:

$ 9375.00	.3 %
Consultant intends to utilize the aforementioned M/WBE, SBE, EBE or DBE for the Work/Supply described above. The percentage of the work of the total sub consultant M/WBE, SBE, EBE or DBE will perform is:	N/A %
If the fee amount of the work to be performed is requested, the fee amount is:	$ N/A
Bidder/Consultant's Signature: [signature]	Date: 10/29/18
Title: Vice President	
M/WBE, SBE, EBE or DBE or Self-Performing Firm's Signature: [signature]	Date: 10/24/2018
Title: President	

If the above named Bidder/Consultant is not determined to be the successful Bidder/Consultant, this Letter of Intent shall be null and void.

Letter of Intent (LOI) Checklist

All lines must be completed or marked N/A for Not Applicable

Submit the attached completed checklist with this letter.

Completed ✓	
☐	Project Number & Project Name
☐	Section A: Name of Bidder/Consultant, Contact Person, Address, City, State, Zip, Phone, Email
☐	Section B: Name of Certified Firm, Contact Person, Address, City, State, Zip, Phone, Email
☐	Designation checked for MBE/WBE, SBE, EBE or DBE
☐	Indirect Utilization: Name of subcontractor/subconsultant, supplier or broker is indicated if using the participation of a 2nd tier subcontractor/subconsultant, supplier or broker.
☐	Scope of work performed or item supplied by M/WBE, SBE, EBE or DBE
☐	Line items performed, if line-item bid.
☐	Copy of M/WBE, SBE, EBE or DBE Letter of Certification Attached
☐	Designation checked for Subcontractor/Subconsultant, Supplier or Broker
	If project is a hard bid...
☐	Bidder has indicated dollar amount for value of work going to Subcontractor/ Subconsultant, Supplier or Broker
☐	Bidder has indicated percentage for value of work going to Subcontractor/ Subconsultant, Supplier or Broker
	If project is an RFP/RFQ...
☐	Consultant has indicated percentage for value of work going to Subcontractor/ Subconsultant, Supplier or Broker Name & contact name for MWBE.
☐	Fee amount if fee amount of work to be performed is requested.
☐	Bidder/Consultant's Signature, Title & Date
☐	M/WBE, SBE, EBE or DBE Firm's Signature, Title and Date

Select One ✓	SUBMITTED VIA... For Construction Hard Bids ONLY, Bidders are strongly urged to deliver the LOI via one of the methods below. (The preferred method is to scan/email completed forms to email address below. Delivery to any other point cannot be guaranteed timely delivery.)
☐	Email to DSBO@denvergov.org

The complete and accurate information that is required for the Letter of Intent is based on the following sections of the Ordinance 85: Section 28-63 and Section 28-68. Failure to complete this information on the Letter of Intent (LOI) may automatically deem a bid or proposal non-responsive.

DENVER
OFFICE OF ECONOMIC DEVELOPMENT

Joint Venture Affidavit

Office of Economic Development
Division of Small Business Opportunity
Compliance Unit
201 W. Colfax Ave. Dept. 907
Denver, CO 80202
Phone: 720-913-1999
DSBO@denvergov.org

The Undersigned swears that the foregoing statements are correct and include all material information necessary to identify and explain the terms and operation of our joint venture and the intended participation by each joint venturer in the undertaking. Further, the Undersigned covenant and agree to provide the City current, complete, and accurate information regarding actual joint venture work and the payment thereof and any proposed changes in any of the joint venture arrangements, and to permit the audit and examination of the books, records, and files of the joint venture, by authorized representatives of the City or Federal funding agency, if applicable. Any material misrepresentation will be grounds for terminating any contract which may be awarded and for initiating action under Federal or State laws concerning false statements.

NOT USED

Name of Firm:

Print Name: | Title

Signature: | Date:

Notary Public

County of | State of | My Commission Expires:

Subscribed and sworn before me this

_____ day of _____, 20_____

Notary Seal

Notary Signature: _____

Notary Commission #: _____

Address: _____

Name of Firm:

Print Name: | Title

Signature: | Date:

Notary Public

County of | State of | My Commission Expires:

Subscribed and sworn before me this

_____ day of _____, 20_____

Notary Seal

Notary Signature: _____

Notary Commission #: _____

Address: _____

N/A

DENVER
OFFICE OF ECONOMIC DEVELOPMENT

JOINT VENTURE ELIGIBILITY FORM

Office of Economic Development
Division of Small Business Opportunity
Compliance Unit
201 W. Colfax Ave. Dept. 907
Denver, CO 80202
Phone: 720-913-1999
DSBO@denvergov.org

Joint Venture means an association of two (2) or more business enterprises to constitute a single business enterprise to perform a City construction or professional design and construction services contract for which purpose they combine their property, capital, efforts, skills and knowledge, and in which each joint venturer is responsible for a distinct, clearly defined portion of the work of the contract, performs a commercially useful function, and whose share in the capital contribution, control, management responsibilities, risks and profits of the joint venture are equal to its ownership interest. Joint ventures must have an agreement in writing specifying the terms and conditions of the relationships between the joint venturers and their relationship and responsibility to the contract.

The Division of Small Business Opportunity (DSBO) requires the following information be provided from participants of a prospective joint venture, to assist DSBO in evaluating the proposed joint venture. This Joint Venture Eligibility form and the Joint Venture Affidavit apply if SBEs, EBEs, MBEs, WBEs or DBEs participate in this joint venture.

Please return this form, the Joint Venture Affidavit, and a copy of your Joint Venture Agreement to: Division of Small Business Opportunity, 201 West Colfax Avenue, Denver, CO 80202, at least ten (10) working days prior to bid opening or proposal.

If you have questions regarding this process, please contact DSBO at 720-913-1999.

Joint Venture Information

Name: | Contact Person:

Address:

City: | State: | Phone:

Joint Venture Participants

Name: | Contact Person:

Address:

City: | State: | Phone:

% Ownership: | Certifying Entity: | Type Certification & Date: (S/E/M/W or DBE)

Type of Work for which Certification was granted:

Name: | Contact Person:

Address:

City: | State: | Phone:

% Ownership: | Certifying Entity: | Type Certification & Date: (S/E/M/W or DBE)

Type of Work for which Certification was granted:

General Information

SBE/EBE/MBE/WBE/DBE Initial Capital Contributions: $ %

Future capital contributions (explain requirements) (attach additional sheets if necessary):

Source of Funds for the SBE/EBE/MBE/WBE/DBE Capital Contributions:

Describe the portion of the work or elements of the business controlled by the SBE/EBE/MBE/WBE or DBE: (attach additional sheets if necessary)

NOT USED

N/A

Describe the portion of the work or elements of the business controlled by non-SBE/EBE/MBE/WBE or DBE: (attach additional sheets if necessary)

JOINT VENTURE ELIGIBILITY FORM

General information

Describe the SBE/EBE/MBE/WBE or DBE's involvement in the overall management of the joint venture (e.g., participation on a management committee or managing board voting rights, etc.) (attach additional sheets if necessary)

Describe the SBE/EBE/MBE/WBE or DBE's share in the profits of the joint venture:

Describe the SBE/EBE/MBE/WBE or DBE's share in the risks of the joint venture:

Describe there roles and responsibilities of each joint venture participant with respect to managing the joint venture (use additional sheets if necessary):

a. SBE/EBE/MBE/WBE or DBE joint venture participant:

b. Non- SBE/EBE/MBE/WBE or DBE joint venture participant:

Describe the roles and responsibilities of each joint venture participant with respect to operation of the joint venture (use additional sheets if necessary):

a. SBE/EBE/MBE/WBE or DBE joint venture participant:

b. Non- SBE/EBE/MBE/WBE or DBE joint venture participant:

NOT USED

N/A

Which firm will be responsible for accounting functions relative to the joint venture's business?

Explain what authority each party will have to commit or obligate the other to insurance and bonding companies, financing institutions, suppliers, subcontractors, and/or other parties?

Please provide information relating to the approximate number of management, administrative, support and non-management employees that will be required to operate the business and indicate whether they will be employees of the S/E/MWBE/DBE, non- S/E/MWBE/DBE or joint venture:

	Non- SBE/EBE/M/WBE/DBE	S/E/EBE/M/WBE/DBE	Joint Venture
Management			
Administrative			
Support			
Hourly Employees			

NOT USED

JOINT VENTURE ELIGIBILITY FORM

General Information

Please provide the name of the person who will be responsible for hiring employees for the joint venture.

Who will they be employed by?

Are any of the proposed joint venture employees currently employees of any of the joint venture partners?		Yes (√)		No (√)

If yes, please list the number and positions and indicate which firm currently employs the individual(s), (use additional sheets if necessary)

Number of employees		Position	Employed By

Attach a copy of the proposed joint venture agreement, promissory note or loan agreement (if applicable), and any and all written agreements between the joint venture partners.

List all other business relationships between the joint venture participants, including other joint venture agreements in which the parties are jointly involved.

If there are any significant changes in or pertaining to this submittal, the joint venture members must immediately notify the Division of Small Business Opportunity.

COMP-FRM-015

CITY AND COUNTY OF DENVER
DEPARTMENT OF PUBLIC WORKS

BID BOND

KNOW ALL MEN BY THESE PRESENTS:

THAT Global Underground Corporation, as Principal, and Employers Mutual Casualty Company, a corporation organized and existing under and by virtue of the laws of the State of Iowa, and authorized to do business within the State of Colorado, as Surety, are held and firmly bound unto the City and County of Denver, Colorado, as Obligee, in full and just sum of Five Percent (5%) of Total Amount Bid ($ 5%), lawful money of the United States, for the payment of which sum, well and truly *to* be made, we bind ourselves, our heirs, executors, administrators, successors and assigns, jointly and severally, firmly by these presents:

WHEREAS, the said Principal is herewith submitting its bid, dated 25th day of October, 2018 for the construction of: **Contract No.** 201844649, **2018 Directional Boring Master On-Call**, as set forth in detail in the Contract Documents for the City and County of Denver, Colorado, and said Obligee has required as a condition for receiving said bid that the Principal deposit specified bid security in the amount of not less than five percent (5%) of the amount of said bid, as it relates to work to be performed for the City, conditioned that in event of failure of the Principal to execute the Contract, for such construction and furnish required Performance and Payment Bond if the contract is offered him that said sum be paid immediately to the Obligee as liquidated damages, and not as a penalty, for the Principal's failure to perform.

The condition of this obligation is such that if the aforesaid Principal shall, within the period specified therefore, on the prescribed form presented to him for signature, enter into a written contract with the Obligee in accordance with his bid as accepted and give Performance and Payment Bond with good and sufficient surety or sureties, upon the form prescribed by the Obligee, for the faithful performance and the proper fulfillment of said Contract, or in the event of withdrawal of said bid within the time specified, or upon the payment to the Obligee of the sum determined upon herein, as liquidated damages and not as penalty, in the event the Principal fails to enter into said contract and give such Perfom1ance and Payment Bond within the time specified, then this Obligation shall be null and void, otherwise to remain in full force and effect.

Signed, sealed and delivered this 25th day of October, 2018.

ATTEST

Secretary

Global Underground Corporation (Seal)
Principal

By

Title VICE PRESIDENT

ATTEST

Witness to Surety

Employers Mutual Casualty Company (Seal)
Surety

By

Title Christina L. Townsend, Attorney-in-Fact

Seal if Bidder is Corporation
(Attach Power-of-Attorney)

Contract No. 201844649
2018 Directional Boring Master On-Call

P.O. Box 712 • Des Moines, Iowa 50306-0712

EMC INSURANCE

POWER OF ATTORNEY APPOINTING INDIVIDUAL ATTORNEY-IN-FACT

KNOW ALL MEN BY THESE PRESENTS, that:

1. Employers Mutual Casualty Company, an Iowa Corporation
2. EMCASCO Insurance Company, an Iowa Corporation
3. Union Insurance Company of Providence, an Iowa Corporation
4. Illinois EMCASCO Insurance Company, an Iowa Corporation
5. Dakota Fire Insurance Company, a North Dakota Corporation
6. EMC Property & Casualty Company, an Iowa Corporation
7. Hamilton Mutual Insurance Company, an Iowa Corporation

hereinafter referred to severally as "Company" and collectively as "Companies", each does, by these presents, make, constitute and appoint:

TIMOTHY J. BLANCHARD, JONATHAN B. LAND, ROBERT CHARLES TORREZ, VICKIE GOLOBIC, TERRI L. REESE, CHRISTINA L. TOWNSEND, JENNIFER J. WALKER, JOHNA KATHRYN MOORS, BARBARA J. ARNOLD, ASHLEY K. ANDERSON, MARY ANN EURICH, DONNA L. ADAMS, RUTH ANNE LINDSAY

ts true and lawful attorney-in-fact, with full power and authority conferred to sign, seal, and execute the Surety Bond:

ANY AND ALL BONDS

and to bind each Company thereby as fully and to the same extent as if such instruments were signed by the duly authorized officers of each such Company, and all of the acts of said attorney pursuant to the authority hereby given are hereby ratified and confirmed.

The authority hereby granted shall expire April 1, 2021, unless sooner revoked.

AUTHORITY FOR POWER OF ATTORNEY

This Power-of-Attorney is made and executed pursuant to and by the authority of the following resolution of the Boards of Directors of each of the Companies at the first regularly scheduled meeting of each company duly called and held in 1999:

RESOLVED: The President and Chief Executive Officer, any Vice President, the Treasurer and the Secretary of Employers Mutual Casualty Company shall have power and authority to (1) appoint attorneys-in-fact and authorize them to execute on behalf of each Company and attach the seal of the Company thereto, bonds and undertakings, recognizances, contracts of indemnity and other writings obligatory in the nature thereof; and (2) to remove any such attorney-in-fact at any time and revoke the power and authority given to him or her. Attorneys-in-fact shall have power and authority, subject to the terms and limitations of the power-of-attorney issued to them, to execute and deliver on behalf of the Company, and to attach the seal of the Company thereto, bonds and undertakings, recognizances, contracts of indemnity and other writings obligatory in the nature thereof, and any such instrument executed by any such attorney-in-fact shall be fully and in all respects binding upon the Company. Certification as to the validity of any power-of-attorney authorized herein made by an officer of Employers Mutual Casualty Company shall be fully and in all respects binding upon this Company. The facsimile or mechanically reproduced signature of such officer, whether made heretofore or hereafter, wherever appearing upon a certified copy of any power-of-attorney of the Company, shall be valid and binding upon the Company with the same force and effect as though manually affixed.

IN WITNESS THEREOF, the Companies have caused these presents to be signed for each by their officers as shown, and the Corporate seals to be hereto affixed this 28th day of March, 2018.

Seals

Bruce G. Kelley, Chairman of Companies 2, 3, 4, 5 & 6; President of Company 1; Vice Chairman and CEO of Company 7

Todd Strother
Vice President

On this 28th day of March, 2018 before me a Notary Public in and for the State of Iowa, personally appeared Bruce G. Kelley and Todd Strother, who, being by me duly sworn, did say that they are, and are known to me to be the Chairman, President, Vice Chairman and CEO, and/or Vice President, respectively, of each of the Companies above; that the seals affixed to this instrument are the seals of said corporations; that said instrument was signed and sealed on behalf of each of the Companies by authority of their respective Boards of Directors; and that the said Bruce G. Kelley and Todd Strother, as such officers, acknowledged the execution of said instrument to be their voluntary act and deed, and the voluntary act and deed of each of the Companies.

My Commission Expires October 10, 2019.

Kathy Loveridge
Notary Public in and for the State of Iowa

KATHY LOVERIDGE
Commission Number 780769
My Commission Expires
October 10, 2019

CERTIFICATE

I, James D. Clough, Vice President of the Companies, do hereby certify that the foregoing resolution of the Boards of Directors by each of the Companies, and this Power of Attorney issued pursuant thereto on 28th day of March, 2018, are true and correct and are still in full force and effect.

In Testimony Whereof I have subscribed my name and affixed the facsimile seal of each Company this 25th day of October, 2018.

Vice President

"For verification of the authenticity of the Power of Attorney you may call (515) 345-2689."

DENVER
OFFICE OF ECONOMIC DEVELOPMENT

Office of Economic Development
Division of Small Business Opportunity
201 W. Colfax Ave, Dept. 907
Denver, CO 80202
p: 720.913.1999
f: 720.913.1809
www.denvergov.org/dsbo

Diversity and Inclusiveness * in City Solicitations
Information Request Form

Type in your response, print out, sign and date; or print out and complete manually. Please print legibly.

Denver Executive Order No. 101 establishes strategies between the City and private industry to use diversity and inclusiveness to promote economic development in the City and County of Denver and to encourage more businesses to compete for City contracts and procurements. The Executive Order requires, among other things, the collection of certain information regarding the practices of the City's contractors and consultants toward diversity and inclusiveness and encourages/requires City agencies to include diversity and inclusiveness policies in selection criteria where legally permitted in solicitations for City services or goods.

Answer each question below. Missing or incomplete responses will be recorded as "no", "not applicable", or "none". **A proposal or response to a solicitation by a contractor/consultant that does not include this completed form shall be deemed non-responsive and rejected.**

Business Email Address: ataylor@globalug.com

Please include the Email address of the contact person facilitating this solicitation for the City and County of Denver: Dani Abbott - danielle.abbott@denvergov.org

Agency Name:

__Arts and Venue
__Auditor Office
__Community Planning
__Denver International Airport
__Environmental Health
__Fire Department
__Purchasing Division
__Human Services
__Economic Development
__Parks and Recreation
__Police Department
X Public Works
__Sheriff Department
__Technology Services
__Other

Project Name: 2018 Directional Boring Master On-Call
BID / RFP No.: 201844649
Name of Contractor/Consultant: Global Underground Corporation
What industry is your business? Underground Utility Construction
Address:
641 Winters Drive
Colorado Springs, CO 80907

Business Phone No.: 719.471.7414
Business Facsimile No.: 719.471.7494

OED – Executive Order No. 101
Diversity and Inclusiveness in City Solicitations Information Request Form
Rev. 12/29/2015

1. How many employees does your company employ?

☐ 1-10 ☒ 51-100
☐ 11-50 ☐ over 100

1.1. How many of your company's employees are:

Full-time 63 Part-Time 1

2. Do you have a Diversity and Inclusiveness Program? ☐ Yes ☒ No

If **No**, and your company size is less than 10 employees continue to question 11. Complete and sign the form.

If **Yes**, does it address:

2.1 Employment and retention? ☐ Yes ☐ No
2.2 Procurement and supply chain activities? ☐ Yes ☐ No
2.3 Customer service? ☐ Yes ☐ No

3. Provide a detailed narrative of your company's diversity and inclusiveness principles and programs. This may include, for example, (i) diversity and inclusiveness employee training programs, equal opportunity policies, and the budget amount spent on an annual basis for workplace diversity; or (ii) diversity and inclusiveness training and information to improve customer service.

N/A

4. Does your company regularly communicate its diversity and inclusiveness policies to employees?

If **Yes**, how does your company regularly communicate its diversity and inclusiveness policies to employees? (select all that apply)

☐ Employee Training
☐ Pamphlets
☐ Public EEO postings
☐ Other
☒ Not Applicable

5. If you responded that you do not have a diversity and inclusiveness program, describe any plans your company may have to adopt such a program.

N/A

6. How often do you provide training in diversity and inclusiveness principles?

- ☐ Monthly
- ☐ Quarterly
- ☐ Annually
- ☒ Not Applicable
- ☐ Other_____

6.1 What percentage of the total number of employees generally participate?

- ☐ 0 – 25%
- ☐ 26 – 50%
- ☐ 51 – 75%
- ☐ 76 – 100%
- ☒ Not Applicable

7. State how you achieve diversity and inclusiveness in supply and procurement activities. This may include, for example, narratives of training programs, equal opportunity policies, diversity or inclusiveness partnership programs, mentoring and outreach programs, and the amount and description of budget spent on an annual basis for procurement and supplier diversity and inclusiveness.

N/A

8. Do you have a diversity and inclusiveness committee? ☐ Yes ☒ No

8.1 If Yes, how often does it meet?

- ☐ Monthly
- ☐ Quarterly
- ☐ Annually
- ☐ Other _____
- ☒ No Committee

8.2 If you responded that you do not have a diversity and inclusiveness committee, describe any plans your company may have to establish such a committee.

N/A

9. Do you have a budget for diversity and inclusiveness efforts? ☐ Yes ☒ No

10. Does your company integrate diversity and inclusion competencies into executive/manager performance evaluation plans? ☐ Yes ☒ No

11. Would you like information detailing how to implement a Diversity and Inclusiveness program?

☐ Yes ☒ No

If yes, please email XO101@denvergov.org.

I attest that the information represented herein is true, correct and complete, to the best of my knowledge.

Signature of Person Completing Form

10.23.18
Date

Alyssa Taylor
Printed Name of Person Completing Form

NOTE: Attach additional sheets or documentation as necessary for a complete response.

*"Diversity and inclusiveness program" means a program that invites values, perspectives and contributions of people from diverse backgrounds, and integrates diversity into its hiring and retention policies, training opportunities, and business development methods to provide an equal opportunity for each person to participate, contribute, and succeed within the organization's workplace. "Diversity" encompasses a wide variety of human differences, including differences such as race, age, gender, gender identity, sexual orientation, ethnicity, physical disabilities, appearance, historically underutilized and disadvantaged persons, as well as social identities such as religion, marital status, socio-economic status, lifestyle, education, parental status, geographic background, language ability, and veteran status."

CITY AND COUNTY OF DENVER

STATE OF COLORADO

DENVER
THE MILE HIGH CITY

DEPARTMENT OF PUBLIC WORKS

Bid Documents Package

Contract Number: 201845992

2018 Directional Boring

Master On-Call

September 25, 2018

CITY AND COUNTY OF DENVER
DEPARTMENT OF PUBLIC WORKS

TABLE OF CONTENTS FOR CONTRACT DOCUMENTS

BID FORM AND SUBMITTAL PACKAGE	PAGE
Bid Form and Submittal Package (bound separately and attached as part of these Bid Documents)	
Table of Contents	BF-1
Bidder's Checklist	BF-2 through BF-3
Bid Form and Submittal Package Acknowledgment Form	BF-4 through BF-5
Bid Form	BF-6 through BF-8
List of Proposed Minority and Woman Business Enterprise(s)	BF-9 through BF-12
Commitment to Minority and Woman Business Enterprise Participation	BF-13
Minority and Woman Business Enterprise Letter(s) of Intent	BF-14
Joint Venture Affidavit	BF-16
Joint Venture Eligibility Form	BF-17 through BF-19
Bid Bond	BF-20
Diversity and Inclusiveness in City Solicitations Form	BF-21 through BF-24

BID DOCUMENTS	
Table of Contents	BDP-1
Statement of Quantities	SQ-1 through SQ-3
Notice of Invitation for Bids	BDP-2 through BDP-3
Instructions to Bidders	BDP-4 through BDP-14
Equal Employment Opportunity Provisions	BDP-15 through BDP-25
Appendix A	
Appendix F	
Contract Form	BDP-26 through BDP-31
Index of the General Contract Conditions	BDP-32 through BDP-36
Special Contract Conditions	BDP-37 through BDP-51
Final/Partial Release and Certificate of Payment Forms (Samples)	BDP- 40 through BDP-41
Performance and Payment Bond Form	BDP-52 through BDP-53
Performance and Payment Bond Surety Authorization letter (Sample)	BDP-54
Notice to Apparent Low Bidder (Sample)	BDP-55 through BDP-56
Notice To Proceed (Sample)	BDP-57
Final Receipt (Sample)	BDP-58
On-Call Specific Contract Forms	
1. Change Rider	1 page
2. Proposal Request	1 page
3. Proposal Request Pricing Worksheet	1 page
4. Unit Price Sheets for Proposal Request	1 page
5. Contractor Worksheet for Proposal Requests	1 page
6. Work Order	1 page
7. Work Order Change	1 page
Prevailing Wage Rate Schedule	6 pages
Technical Specifications	55 pages

CITY AND COUNTY OF DENVER
DEPARTMENT OF PUBLIC WORKS

STATEMENT OF QUANTITIES

Item No.	Description	Estimated	Quantity
202-00200	Removal of Sidewalk	6,000	SF
202-00220	Removal of Asphalt Mat	600	SF
202-00856	Removal of Traffic signal cabinet base	10	EA
203-01597	Potholing	1,700	EA
208-00002	Erosion Log (12 Inch)	1,300	LF
208-00045	Concrete Washout Structure	50	EA
208-00050	Storm Drain Inlet Protection	200	EA
208-00205	Erosion Control Supervisor	125	HR
211-03005	Dewatering	140	EA
212-01200	Landscape Restoration	6,000	SF
403-00721	Hot Mix Asphalt (Patching) (Asphalt)	120	SY
604-39050	Manhole(Type A)(6'x6')	2	EA
607-11525	Fence (Plastic)	6,000	LF
608-00000	Concrete Sidewalk	5,500	SF
608-00005	Concrete Sidewalk (Special)	100	SF
613 -00310	3 Inch Electrical Conduit (Trenched)	350	LF
613-00003	Boring Pit - Small (3'x3'x3')	20	EA
613-00005	Boring Pit - Large (5'x5'x6')	200	EA
613-00206	2 Inch Electrical Conduit (Bored)	900	LF

CITY AND COUNTY OF DENVER
DEPARTMENT OF PUBLIC WORKS

STATEMENT OF QUANTITIES

Item No.	Description	Estimated	Quantity
613-00209	2 Inch Electrical Conduit (Trenched)	350	LF
613-00306	3 Inch Electrical Conduit (Bored)	35,000	LF
613-00307	Two 3 Inch Electrical Conduit (Bored)	3,500	LF
613-00308	Three 3 Inch Electrical Conduit (Bored)	100	LF
613-00309	One 2 Inch and Two 3 Inch Electrical Conduit (Bored)	3,500	LF
613-00408	4 Inch Electrical Conduit (Bored)	100	LF
613-00603	6 Inch Electrical Conduit (Bored)	100	LF
613-04030	Proof Conduit (3-man labor crew)	3,000	LF
613-04031	Conduit and Fiber Repair (3-man labor crew)	200	HR
613-07023	Pull Box (Type C)(36"x24"x24")	300	EA
613-07199	Pull Box (Type A and B)	50	EA
613-07201	Pull Box (Type D)(30"x48"x18")	20	EA
614- 75830	Traffic signal cabinet base (concrete)	5	EA
614-75835	Traffic Signal Cabinet base (pre-fab)	10	EA
614-87401	Fiber Optic Cable (Denver Hybrid)(12x12 Strands)	5,000	LF
614-87402	Fiber Optic Cable (Denver Hybrid)(36x12 Strands)	5,000	LF
614-87403	Fiber Optic Cable (Denver Hybrid)(60x12 Strands)	5,000	LF
614-87404	Fiber Optic Cable (Denver Hybrid)(120x24 Strands)	2,500	LF
614-87424	Fiber Optic Cable (Single Mode) (24 Strands)	5,000	LF

CITY AND COUNTY OF DENVER
DEPARTMENT OF PUBLIC WORKS

STATEMENT OF QUANTITIES

Item No.	Description	Estimated	Quantity
614-87425	Fiber Optic Cable (Multi Mode) (12 Strands)	100	LF
614-87426	Fiber Optic Cable (Single Mode) (12 Strands)	10,000	LF
614-87427	Fiber Optic Cable (Single Mode) (48 Strands)	5,000	LF
614-87428	Fiber Optic Cable (Single Mode) (72 Strands)	5,000	LF
614-87429	Fiber Optic Cable (Single Mode) (96 Strands)	10,000	LF
614-87430	Fiber Optic Cable (Single Mode) (144 Strands)	5,000	LF
614-87650	Pull Fiber	75,000	LF
614-87651	Install Pull Tape in Existing Conduit	3,000	LF
614-87652	Copper Tracer Wire	40,000	LF
623 -06901	Traffic Valve Box (Install Only)	10	EA
626-00000	Mobilization	50	EA
630-00003	Uniformed Traffic Control	100	HR
630-00013	Traffic Control Management	3,000	HR
630-80341	Construction Traffic Sign (Panel Size A)	150	EA
630-80342	Construction Traffic Sign (Panel Size B)	150	EA
630-80356	Advance Warning Flashing or Sequencing Arrow Panel (A Type)	50	EA
630-80380	36 Inch Traffic Cone	1,500	EA
699-00010	Railroad Permit Fee	3	EA

CITY AND COUNTY OF DENVER
DEPARTMENT OF PUBLIC WORKS

NOTICE FOR INVITATION FOR BIDS
FOR CONTRACT NO. 201845992

2018 DIRECTIONAL BORING MASTER ON-CALL

BID SCHEDULE:
11:00 a.m., Local Time
October 25, 2018

Sealed bids will be received in Room 6.G.7, 201 W. Colfax Ave., Denver, CO 80202, beginning at 10:30 a.m., no later than 11:00 a.m., on bid day. All properly delivered bids will then be publicly opened and read aloud.

Bids submitted prior to 10:30 a.m. on the specified bid opening date/time shall be presented at the Office of Contract Administration, Attention: Dani Abbott, Public Works Contract Administration, 201 W. Colfax Ave., Department 614, Denver, CO 80202.

Prior to submitting a bid, the bidder shall consult the Contractor's Bulletin Board located at 201 W. Colfax Ave., 2nd Floor, Denver, CO 80202 and/or www.work4denver.com.

GENERAL STATEMENT OF WORK:
2018 Directional Boring Master On-Call will be used to install electrical conduits throughout the City; including, but not limited to: supporting DAFNE, traffic signal rebuild programs, Interconnects system, and (ITS) Intelligent Traffic System infrastructures construction and/or rebuilds. Multiple contracts may be awarded.

ESTIMATED CONSTRUCTION COST:
The estimated cost of construction for this project is between $2,894,000 and $3,198,000.

TEXTURA CONSTRUCTION PAYMENT MANAGEMENT:
Bidders are required, when preparing a bid, to agree it shall use the Textura® Construction Payment Management System ("Textura") to request payment from the City and to pay subcontractors. All certified subcontractors or suppliers who are listed for participation towards any assigned program goal must be paid via Textura. All fees associated with Textura are to be paid by the awarded Contractor. Bidders shall use the pricing scale provided in Instructions to Bidders to price the Textura service appropriately. For details on the company and service, contact the Textura® Corporation at 866-TEXTURA or www.texturacorp.com.

DOCUMENTS AND BID INFORMATION AVAILABLE:
Contract Documents complete with Technical Specifications and construction drawings, if applicable will be available on the first day of publication at: www.work4denver.com to download digital Contract Documents at a cost of $15.00 per download (eBid Document Number **#5955928**. Contact QuestCDN at 952-233-1632 or info@questcdn.com for assistance.

PRE-BID CONFERENCE:
A pre-bid conference will be held for this Project at 1:00 p.m., local time, on October 4, 2018. This meeting will take place in Conference Room 4.I.4, 201 W. Colfax Ave. Denver, CO 80202.

DEADLINE TO SUBMIT QUESTIONS: October 11, 2018, 11:00 a.m. local time.

PREQUALIFICATION REQUIREMENTS:
None.

MINORITY AND WOMAN BUSINESS ENTERPRISE PARTICIPATION:
Construction, reconstruction and remodeling contracts made and entered into by the City and County of Denver are subject to Article III, Divisions 1 and 3 of Chapter 28 of the Denver Revised Municipal Code, (Sections 28-31 to 28-36 and 28-52 to 28-90 D.R.M.C) and all Minority and Woman Business Enterprise and Equal Employment Opportunity Rules and Regulations adopted by the Director of the Division of Small Business Opportunity.

Article III, Division 3 of Chapter 28 of the D.R.M.C. directs the Director of the Division of Small Business Opportunity to establish a project goal for expenditures on construction, reconstruction, and remodeling work contracted by the City and County of Denver. The specific goal for this project is:

4% Minority and Woman Business Enterprise (M/WBE) Participation

Project goals must be met with certified participants as set forth in Section 28-60, D.R.M.C. or through the demonstration of a sufficient good faith effort under Section 28-62 D.R.M.C. For compliance with good faith requirements under Section 28-62(b), **the M/WBE percentage solicitation level required for this project is 100%.**

The Director of the Division of Small Business Opportunity urges all participants in City construction, reconstruction and remodeling projects to assist in achieving these goals.

MISCELLANEOUS:
Contracts for construction, reconstruction, and remodeling are subject to the City prevailing wage rate requirements established pursuant to Section 20-76, D.R.M.C.

As its best interest may appear, the Manager of Public Works reserves the right to reject any or all bids and to waive informalities in bids.

Publication Dates: September 25, 26, 27, 2018
Published In: The Daily Journal

A modified version of this Notice of Invitation for Bids and the project's Statement of Quantities is available on the City and County of Denver's website at: www.work4denver.com.

CITY AND COUNTY OF DENVER
DEPARTMENT OF PUBLIC WORKS

INSTRUCTIONS TO BIDDERS

IB-1 INSTRUCTION TO BIDDERS

These Instructions to Bidders are a part of the Contract Documents and are intended to serve as a guide to bidders. They are general in nature and may be amended or supplemented as needed to support any one specific invitation to bid. Each bidder shall prepare its bid in strict compliance with all requirements of the Contract Documents and by careful application of these instructions.

IB-2 BIDDING

The copy of the Contract Documents contains the Bid Form and Submittal Package for this Project which must be used to submit a bid hereunder. The bidder must fully complete, execute and submit this Bid Form and Submittal Package, along with any other specified components of the Contract Documents, as its bid for the referenced Project.

A bidder is not required to submit as part of its bid the entire set of Contract Documents distributed by the City pursuant to the Notice of Invitation for Bids, if the bidder executes and submits the Bidder Acknowledgment Form included with the Bid Form and Submittal Package as part of its bid. However, each bidder, by submitting its bid, shall be conclusively presumed to have received and reviewed all of the information contained in the Contract Documents as this term is further defined herein.

Each bid must be enclosed in a sealed envelope, must be addressed to the Manager and must show on the face of the envelope the full name of the bidder, the City Project Number, and descriptive title of the Project for which the bid is made.

The advertisement for Notice of Invitation for Bids will identify where and when the bid must be delivered.

IB-3 CONTRACT DOCUMENTS AS PUBLISHED BY CITY

Each bidder shall be responsible for, and shall be deemed to have received, all the information contained in the Contract Documents as distributed by the City pursuant to the Notice of Invitation for Bids, including addenda, whether or not such bidder has reviewed all or part of the Contract Documents in either its hard copy form or in any other format. If organizations or companies other than the City or its design professional distribute the City's Contract Documents for review by prospective bidders, whether in hard copy or via electronic or other media, neither the City nor its design professional shall be responsible for the content, completeness or accuracy of any information distributed or transmitted by any such organization or company.

IB-4 COMPLETING AND SIGNING THE BID FORMS

The bidder must complete the Bid Form by legibly writing or printing in ink, in words and figures as required, all the bidder's prices offered for the Work to be performed. All blank spaces, which require a response of the bidder, must be properly completed in full. If in the process of evaluating a bid, words and figures, as written on the Bid Form by the bidder, do not agree, the written words will govern.

This Bid Form requires unit price bids for representative work items listed. The bidder shall write in the Bid Form spaces provided a unit price for each work item for which a quantity is given and shall also write the product of each unit price and the quantity specified in the "Amount" or "Total" space provided. Upon completion of all spaces provided for the listed work items, the bidder shall total all of the work item "Amounts" provided by the bidder and write that total, in words and figures, in each space provided on the Bid Form.

Each bidder must sign the Bid Form and give the bidder's current business address. If an individual, the signature must be of the individual offering the bid; if a partnership, the signature must be that of a general partner; and if a corporation, both the president and the secretary must sign and the seal of the corporation must be affixed. Signatures of other persons may be acceptable if the bid contains sufficient evidence, satisfactory to the City in its sole discretion, to indicate that the other persons are authorized to bind the bidder.

IB-5 UNACCEPTABLE BIDS

The City will not accept bids from Bidders not prequalified with the Department of Public Works (if prequalification is required for this project), in arrears to the City upon debt or contract, or which are defaulters (as surety or otherwise) upon any obligation to the City.

IB-6 INFORMAL AND UNBALANCED BIDS

Any alteration, interlineation, erasure, omission, deletion or addition by the bidder to the Bid Form and Submittal Package or other parts of the Contract Documents submitted with the Bid Form and Submittal Package, as originally issued to the bidder, shall render the accompanying bid informal and may constitute cause for rejection.

Any unauthorized addition, conditional or alternate bids, failure to provide a unit price, lump sum amount or authorized alternate item specified or other irregularities of any kind which tend to render the bid incomplete, indefinite or ambiguous shall render the bid informal and may constitute cause for rejection.

Bids for any work item that are deemed unbalanced or unreasonable so as to disproportionate to reasonable approximations or estimates of the work item or items that do not reasonably carry its own proportion of cost or that contain inadequate or unreasonable prices for any item may be rejected. Bids which have not acknowledged all addenda to the Contract Documents issued for this bid may also be rejected.

The right is reserved by the City to reject any or all bids and to waive any informalities where it is deemed by the City to be in the best interests of the City to do so.

IB-7 ONLY ONE BID ACCEPTED

The City will accept only one bid for the same work from any one bidder. This includes bids that may be submitted under different names by one business enterprise.

IB-8 BID GUARANTEE

As a guarantee of good faith on the part of the bidder, each bid must be accompanied by a bid guarantee, consisting of either a certified or cashier's check made payable without condition to the order of the City and County of Denver or a bid bond written by an approved corporate surety in favor of the City and County of Denver. If the bid of a bidder is acceptable and the bidder is notified by the Manager that it is considered to be the Apparent Low Bidder and said bidder fails to execute a contract in the form prescribed or to furnish a performance and payment bond with a legally responsible and approved surety or to furnish the required evidence of insurance or satisfy all conditions precedent to contract execution within five (5) days after such notice is made by the City, said bid guarantee shall be forfeited to the City as liquidated damages and not as a penalty.

The bid guarantee shall be in the amount of **five percent (5%)** of the total bid unless otherwise specified in the Notice of Invitation for Bids and on the form appearing in the Contract Documents in the Bid Form and Submittal Package. Failure to submit a properly executed bid guarantee, on the form provided herein may, in the City's sole discretion, constitute cause for rejection.

Following award and execution of the Contract by the Apparent Low Bidder, or earlier in the sole discretion of the City, bid guarantees of all but the Apparent Low Bidder will be returned. When the Apparent Low Bidder executes the Contract and delivers to the City satisfactory performance and payment bonds, required insurance documentation, and has satisfied all conditions precedent to contract execution by the City, and after approval, if any, by the Council of the City of the proposed Contract with the Apparent Low Bidder, the bid guarantee of the Apparent Low Bidder shall be returned. Such return shall be made within one hundred twenty (120) days from date bids are opened unless otherwise specified in the Special Contract Conditions.

IB-9 NOT USED

IB-10 INCONSISTENCIES

Any seeming inconsistencies or ambiguities between different provisions of the Contract Documents or any point which the bidder believes requires a decision or interpretation by the City must be inquired into by the bidder by addressing a formal written communication to the Manager of Public Works and sending or delivering it to the offices of the Division of Public Works advertising this Project for bid at least forty-eight (48) hours, excluding Saturdays, Sundays, and holidays, before the time set for the opening of bids

Information about the decision or interpretation made in response to any inquiry will be posted on the Contractor's Bulletin Board (refer to IB-12 CONTRACTOR'S BULLETIN BOARD, for the location of the Contractor's Bulletin Board). If the matter raised requires, in the sole discretion of the Manager, that an addendum to the bid documents be issued, such addendum will be published and each bidder shall be required to acknowledge the addendum by signing and identifying it in the Bid Form when submitting the bid.

After bids are opened, all bidders must abide by the formal response of the Manager, as to any interpretation. The City shall not be bound and the bidder shall not rely on any oral communication, interpretation clarification or determination of the Contract Documents prior to bid opening.

IB-11 WITHDRAWAL OF BID

A bidder may withdraw its bid at any time prior to the time for receipt of bids set forth in the Notice of Invitation for Bids by making written request upon the Manager of Public Works. After such time, no bid may be withdrawn or modified.

Such request must be signed by the persons authorized to bind the bidder as defined in IB-3, COMPLETING AND SIGNING BID FORMS.

IB-12 CONTRACTOR'S BULLETIN BOARD

It shall be conclusively presumed that the bidder has, before submitting any bid, read and shall take full responsibility for all addenda, posted decisions, and other information relevant to the bid posted by the City on the Contractor's Bulletin Board. The Contractor's Bulletin Board is located on the 2nd floor at 201 W. Colfax Avenue, Denver, CO 80202.

IB-13 PRE-BID MEETING

Bidders are urged to attend the pre-bid meeting(s) scheduled for this Project. Attendance is not mandatory; however, bidders will be held responsible for all information presented at such meeting(s).

IB-14 ADDENDA

As its best interests may require, the City may issue addenda to the Contract Documents. Such addenda shall be posted on the Contractor's Bulletin Board and made available to all persons having purchased a set of Contract Documents as set forth in the Notice of Invitation for Bids contained herein. All bidders must acknowledge receipt of all addenda on the Bid Form at the time of submission of the bid.

IB-15 BID OPENING

Bidders are invited to be present at the bid opening. Unless otherwise suspended, delayed or canceled by posted notice from the Manager, bid opening will occur at the time and place designated in the Notice of Invitation for Bid.

IB-16 EVALUATION OF BIDS AND BASIS OF BID SELECTION

Bids will be evaluated after being read in open meeting at the place designated for such bid opening. The low bidders' bids will be reviewed for responsiveness to the requirements of Bid Documents and whether or not the bids contain irregularities which could give any bidder an unfair advantage.

Contract award will be made on the basis of the lowest, total, responsive, qualified bid, which bid shall include the total of all work items listed on the Bid Form. Bid selection will be subject to all requirements and special bidder qualifications contained herein and subject to approval of such resulting Contract in accordance with the Charter and Revised Municipal Code of the City and County of Denver. In addition to all other specified requirements, the City will correct arithmetical errors in all bids and corrected totals only will be considered as the basis of selection.

Upon concluding that the bid is, in fact, the lowest, total, responsive bid to the bidding conditions and that of a responsible, qualified bidder, the City will notify the Apparent Low Bidder.

As its best interests may appear, the City and County of Denver reserves the right to waive informalities in bids, to reject any and all bids and to rebid the Project.

IB-17 NOTICE TO APPARENT LOW BIDDER

The Notice to Apparent Low Bidder, a form of which is included in the Contract Special Conditions Section of the Contract Documents, is issued by the City directly to the selected bidder and informs the bidder that the Manager intends to seek approval of the execution of the Contract by the City in accordance with the Charter and Revised Municipal Code of the City and County of Denver. Specifically, it informs the bidder of its obligations with respect to execution of the Contract and instructs the bidder on how to proceed toward execution of the Contract. The City reserves the right to notify the Apparent Low Bidder, at any time within one hundred twenty (120) days from the date of the opening of the bids, that approval to contract with the Apparent Low Bidder shall be sought in accordance with the Charter and Revised Municipal Code of the City and County of Denver.

In accordance with the terms and conditions contained in the Bid Form and Submittal Package and any additional requirements set forth in the Notice to Apparent Low Bidder or elsewhere in the Contract Documents, the Apparent Low Bidder shall execute the Contract Form contained in the Contract Documents made available by the City for execution in the appropriate number of counterparts. The Apparent Low Bidder shall return the fully executed Contract Document sets, along with any supplemental documents required herein, to the City and shall comply with all other conditions precedent to Contract execution within five (5) days of the date of issuance of the Notice to Apparent Low Bidder by the City. Failure to comply with each of these requirements within five (5) days of the date of issuance of the Notice to Apparent Low Bidder by the City shall render the bid nonresponsive and may constitute cause for rejection.

Issuance of such Notice shall not, however, constitute a commitment on the part of the City or create any rights in the Apparent Low Bidder to any contract with the City.

IB-18 EXECUTION OF CONTRACT

The process of executing a contract requires action by both the apparent low bidder and the City. After it notifies the Apparent Low Bidder, the City will prepare the Contract Documents by incorporating all of the documents submitted by the Apparent Low Bidder into one or more executable copies. Upon notification that the contract documents are ready for execution the Apparent Low Bidder shall execute the contract documents. At this time, the successful bidder shall also provide certain supplemental documents for incorporation into the Contract Documents. These supplemental documents shall include: the properly executed Certificate of Insurance Forms evidencing the apparent low bidder's satisfactory compliance with the insurance requirements set forth in the Contract Documents; a properly executed Payment and Performance Bond Form and appropriate Power of Attorney evidencing the Apparent Low Bidder's satisfactory compliance with the bonding requirements set forth in the Contract Documents; and documentation of compliance with any other conditions precedent to execution of the Contract by the City set forth in the Contract Documents. The insurance and bond forms contained in the Contract Special Conditions Section of the Contract Documents must be used in satisfying these supplemental document requirements.

These documents are then delivered to the City within the prescribed time period for examination of the documents to determine whether or not the Contractor has correctly executed the Contract and has correctly provided the required supplemental documents and that these documents are satisfactorily and properly completed. From here, all of the documents are forwarded to the City Attorney who will, if the insurance and bonding offered is acceptable and if all other elements of the Contract Documents are in order, recommend that the Manager and the Mayor approve the documents and, when required by the City Charter, prepare an ordinance for submittal to City Council authorizing the execution of the Contract. The City Attorney shall in all applicable instances submit the proposed contract and ordinance to City Council. After City Council approval, the Contract shall be reviewed by the City Attorney and routed for execution by the Mayor, the Clerk for attestation and the Auditor for countersignature and registration. When the total process of contract execution is complete, a Notice to Proceed will be issued and a single executed copy of the Contract will be delivered to the Contractor. Any work performed or materials purchased prior to the issuance of Notice to Proceed is at the Contractor's risk.

IB-19 BONDING REQUIREMENTS

In accordance with the provisions of General Contract Conditions, Title 15, PERFORMANCE AND PAYMENT BONDS, the minimum bonding requirements for this Contract are set forth in the form **CITY AND COUNTY OF DENVER PERFORMANCE AND PAYMENT BOND** contained in the Special Conditions Section of the Contract Documents. Upon receipt of Notice to Apparent Low Bidder, the apparent low bidder must cause this

form bond to be purchased, executed and furnished, along with appropriate Powers of Attorney and a surety authorization letter (in form similar to the one attached), to the City.

IB-20 INSURANCE REQUIREMENTS

The minimum insurance requirements for this Contract are set forth in the Special Conditions Section of the Contract Documents. Bidders are urged to consider, in preparing a bid hereunder, that each condition, requirement or specification set forth in the form certificate must be complied with by the Contractor and all subcontractors performing Work on the Project, unless such requirements are specifically accepted in writing by the City's Risk Management Office. The Contractor must either include all subcontractors performing work hereunder as insureds under each required policy or furnish a separate certificate for each subcontractor. In either case, the Contractor shall insure that each subcontractor complies with all of the coverage requirements.

IB-21 PERMITS AND LICENSES

All permits, licenses and approvals required in the prosecution of the work shall be obtained and paid for by the Contractor.

IB-22 WAGE RATE REQUIREMENTS

Contractor shall comply with, and agrees to be bound by, all requirements, conditions and City determinations regarding the Payment of Prevailing Wages Ordinance, Sections 20-76 through 20-79, D.R.M.C. including, but not limited to, the requirement that every covered worker working on a City owned or leased building or on City-owned land shall be paid no less than the prevailing wages and fringe benefits in effect on the date the bid or request for proposal was advertised. In the event a request for bids, or a request for proposal, was not advertised, Contractor shall pay every covered worker no less than the prevailing wages and fringe benefits in effect on the date funds for the contract were encumbered.

Date bid or request for qualifications/proposals was advertised: September 25, 2018.

Prevailing wage and fringe rates will adjust on, and only on, the anniversary of the date the Contract was fully executed. Unless expressly provided for in this Agreement, Contractor will receive no additional compensation for increases in prevailing wages or fringe benefits.

Contractor shall provide the Auditor with a list of all subcontractors providing any services under the contract.

Contractor shall provide the Auditor with electronically-certified payroll records for all covered workers employed under the contract.

Contractor shall prominently post at the work site the current prevailing wage and fringe benefit rates. The posting must inform workers that any complaints regarding the payment of prevailing wages or fringe benefits may be submitted to the Denver Auditor by calling 720-913-5000 or emailing auditor@denvergov.org.

If Contractor fails to pay workers as required by the Prevailing Wage Ordinance, Contractor will not be paid until documentation of payment satisfactory to the Auditor has been provided. The City may, by written notice, suspend or terminate work if Contractor fails to pay required wages and fringe benefits.

IB-23 TAX REQUIREMENTS

General. Bidders are referred to the General Contract Condition 323, TAXES, as to taxes to which they may be subject in performing the Work under this Contract, including but not limited to sales and use taxes and the Denver Occupational Privilege Tax. The following instructions are to be considered along with the General Contract Conditions and not in lieu of them.

Sales and Use Tax. Construction and building materials sold to contractors and subcontractors for use on structures, roads, streets, highways, and other public works owned by the City and County of Denver are exempt from state, RTD, and Cultural Facilities District sales and use taxes. However, such materials will be subject to sales and use taxes imposed by the City and County of Denver.

It is the responsibility of the Contractor and its subcontractors to apply to the Colorado Department of Revenue ("CDOR") for a certificate, or certificates, of exemption indicating that their purchase of construction or building materials is for a public project, and to deliver to the City copies of such applications as soon as possible after

approval by the CDOR. Bidders shall not include in their bid amounts the exempt state, RTD, and Cultural Facilities District Sales and Use Taxes.

Denver Occupational Privilege Tax. Any employee working for a contractor, or a subcontractor, who earns over $500 working in Denver during a calendar month, is subject to the payment of the Employee Occupational Privilege Tax. The Contractor and any subcontractor must pay the Business Occupational Privilege Tax for each of its employees who is subject to such tax.

IB-24 DIVERSITY AND INCLUSIVENESS IN CITY SOLICITATIONS

Each bidder shall, as a condition of responsiveness to this solicitation, complete and return the "Diversity and Inclusiveness in City Solicitations Information Request Form" with their Bid.

Using the "Diversity and Inclusiveness in City Solicitations Information Request Form" provided please state whether you have a diversity and inclusiveness program for employment and retention, procurement and supply chain activities, or customer service and provide the additional information requested on the form. The information provided on the "Diversity and Inclusiveness in City Solicitations Information Request Form" will provide an opportunity for City contractors to describe their own diversity and inclusiveness practices. Contractors are not expected to conduct intrusive examinations of its employees, managers, or business partners in order to describe diversity and inclusiveness measures. Rather, the City simply seeks a description of the contractor's current practices, if any.

Diversity and Inclusiveness information provided by City contractors in response to City solicitations for services or goods will be collated, analyzed, and made available in reports consistent with City Executive Order No. 101. However, no personally identifiable provided by or obtained from contractor's will be in such reports.

IB-25 MINORITY AND WOMAN BUSINESS ENTERPRISE (M/WBE) REQUIREMENTS

Article III, Divisions 1 and 3 of Chapter 28, Denver Revised Municipal Code (D.R.M.C.), designated as Sections 28-31 – 28-36 and 28-52 – 28-90 D.R.M.C. and referred to in these Bid Documents as the "M/WBE Ordinance" and any Rules or Regulations promulgated pursuant thereto apply to this Project and are incorporated into these Bid Documents by reference. Generally, the M/WBE Ordinance provides for the adoption of a good faith goals program, to be administered by the Division of Small Business Opportunity (DSBO), devised to provide increased bidding opportunities for Minority and Woman Business Enterprises (M/WBEs). As such, each bidder must comply with the terms and conditions of the M/WBE Ordinance in making its bid and, if awarded the Contract, in performing all Work thereunder. A bidder's failure to comply with the M/WBE Ordinance, any Rules or Regulations promulgated pursuant thereto, or any additional requirement contained herein shall render the bid non-responsive and shall constitute cause for rejection. Failure by the contractor awarded the contract to comply with M/WBE Ordinance requirements during the performance of the contract is a material breach of the contract, which may result in the in the imposition of sanctions on the Contractor, as deemed appropriate by DSBO. Copies of the M/WBE Ordinance and its accompanying Rules and Regulations are available for the use and review of bidders from DSBO. In order to comply with the bid requirements of the M/WBE Ordinance, a bidder shall either meet the established project goal or, in the alternative, demonstrate that the bidder has made sufficient good faith efforts to meet the goal in accordance with the M/WBE Ordinance.

Meeting Established Goal

In preparing a bid to meet the established Project goal, bidders should consider the following instructions relating to compliance with the M/WBE Ordinance:

1. Under the M/WBE Ordinance, the Director of DSBO ("Director") is directed to establish project goals for expenditures on construction, reconstruction, and remodeling work performed for the City and County of Denver. The specific goal for this project is stated in the Notice of Invitation for Bids bound herein.

2. In preparing its bid, each bidder shall list on the Bid Form pages entitled "List of Proposed MWBE Bidders, Subcontractors, Suppliers, Manufacturers, Manufacturers' Representatives or Brokers" the name, address, work description/supply, committed level of participation and other required information for each M/WBE of any tier which the bidder intends to use in performing the work on this Project. **Only the M/WBEs identified and the precise levels of participation listed for each on the Bid Form page, at the time of bid opening, will be considered in determining whether the bidder has met the designated participation goal. Additional, revised or corrected participation submitted after bid**

opening will not be considered. M/WBE bidders may count self-performance or joint venture activity in meeting the M/WBE project goal, but only for the scope of work performed as a commercially useful function and at a percentage level the M/WBE will be performing itself.

3. Any agreement between a bidder or proposer and an MBE or WBE in which the bidder or proposer requires that the MBE or WBE not provide subcontracting quotations to other bidders or proposers is prohibited and shall render a bidder's bid or proposer's proposal nonresponsive. D.R.M.C. 28-63(f)

4. If a bidder/proposer is participating in a joint venture with a certified M/WBE firm, complete the Joint Venture Eligibility Form and Joint Venture Affidavit contained in this bid document/RFP. Submit the aforementioned forms with the firm's Joint Venture Agreement, to the DSBO Director, **at least 10 working days prior to the proposal submittal.** The Joint Venture must be approved prior to the bid opening or proposal submittal by the DSBO Director. Approval by the DSBO Director includes determining the amount the Joint Venture will count towards meeting the project goal.

5. All M/WBEs listed on the Bid Form must be properly certified by the City on or before the date bids are opened in order to count towards meeting the designated goal. DSBO maintains an M/WBE Directory ("Directory"), which is a current listing of M/WBEs that have been certified by the City. A copy of the DSBO Directory is located at DSBO web site at https://www.denvergov.org/dsbo. Bidders are encouraged to use the Directory to assist in locating M/WBEs for the work and supplies required on the Project. Bidders are reminded that changes may be made to the Directory at any time in accordance with the City's M/WBE Ordinance and procedures established to administer this program and a current copy of the Directory must always be used in preparing a bid. M/WBE certification or listing in the Directory is not a representation or warranty by the City as to the qualifications of any listed M/WBE.

6. In accordance with the provisions of the M/WBE Ordinance, DSBO will evaluate each bid to determine the responsiveness of the bid to the requirements of the M/WBE Ordinance. In determining whether a bidder's committed level of participation meets or exceeds the stated M/WBE goal, DSBO shall base its calculation of applicable amounts and percentages on the total base bid amount, not including any listed alternates, of each bid as follows:

   a. The bid information provided by the agency will be used to determine the total base bid amount of each bid. Each bidder's total base bid amount will be multiplied by the M/WBE percentage established for the project to determine the exact dollar amount of required M/WBE participation for the Project. This amount will then be compared against the exact dollar amounts for the M/WBE committed for participation by the bidder. If the total dollar amount of participation listed meets or exceeds the established M/WBE dollar amount goal listed, then DSBO will determine that the goal has been met.

   b. In addition, DSBO will determine the exact commitment percentage for each listed M/WBE by dividing the dollar amount listed for each M/WBE by the total base bid dollar amount submitted by the bidder. These individual percentages, when totaled for all listed M/WBE, will establish the total committed percentage level of M/WBE participation that the bidder must comply with during the life of the contract. In all cases, the committed percentage level of M/WBE participation must equal or exceed the assigned M/WBE goal for the Project.

   c. In providing the exact dollar amount of participation for each listed M/WBE, a bidder should take care never to round up in determining whether or not the total of these amounts meets or exceeds the established percentage goal. The goal must be met or exceeded by dollar amounts and percentages in order for DSBO to determine that the bidder has met or exceeded the applicable M/WBE goal.

   d. As previously mentioned, compliance with the M/WBE goal will be determined on the base bid alone. If a bid contains alternates, participation contained in any alternate will not count towards satisfaction of the Project goal. However, should any designated alternate be selected by the City for inclusion in the contract ultimately awarded, the M/WBE goal percentage level submitted at bid time, on the base bid, will also apply to the selected alternates and must be maintained for the life of the contract on the total contract amount, including any alternate work.

Thus, even though such participation will not be considered in evaluating bids, bidders are urged to consider participation in preparing bids for designated alternates.

d. On projects where force account or allowance bid items have been included, bidders must meet the M/WBE goal percentage based upon the total base bid, including all such items that are submitted to the City. However, when a force account or allowance is designated by the City to be either performed or purchased from a specific company, the bidder may back out the dollar amount of the force account or allowance from the total base bid and meet the M/WBE goal on the remaining reduced amount.

e. On bids which, at the time of bid opening, are equal to or exceed Five Million Dollars ($5,000,000.00), including any alternates which may be selected, only sixty percent (60%) of the value of the commercially useful function performed by M/WBE suppliers shall count toward satisfaction of the Project goal. On Projects under Five Million ($5,000,000.00) the value of the commercially useful function of M/WBE supplier(s) will count at a one hundred percent (100%) level. Manufacturer's representatives and packagers shall be counted in the same manner as brokers.

f. In utilizing the M/WBE participation of a Broker only the bona fide commissions earned by such Broker for its performance of a commercially useful function will count toward meeting the Project goals. The bidder must separate the bona fide brokerage commissions from the actual cost of the supplies or materials provided to determine the actual dollar amount of participation that can be counted towards meeting the goal.

7. On or before the third (3rd) working day after bid opening, all of the Bidders are required to submit an executed "Letter of Intent" for each M/WBE listed on the Bid Form as a joint venture member, subcontractor, supplier, manufacturer, manufacturers' representative or broker of any tier. **An MBE or WBE Prime Bidder needs to submit a Letter of Intent for itself for self performed work**, and must identify their level of participation on the designated M/WBE participation page bound herein. A Letter of Intent shall be submitted <u>only</u> for the M/WBEs listed at the time of bid opening, since this is the only participation that will be counted toward satisfaction of the project goal. A form for the M/WBE Letter of Intent is included with the Bid Form. The M/WBE Letter of Intent is a written communication from the Bidder to the City evidencing an understanding that the Bidder has or will enter into a contractual relationship with the M/WBE or that its subcontractor(s) and supplier(s), manufacturer(s), manufacturers' representative(s) and broker(s) will do so. Each M/WBE Letter of Intent shall be accompanied by a copy of the City and County of Denver's M/WBE certification letter for each proposed M/WBE identified at bid time. Bidders are urged to carefully review these Letters before submission to the City to ensure that they are properly completed and executed by the appropriate parties.

Good Faith Effort.
In preparing a bid to demonstrate a good faith effort, bidders should consider the following instructions relating to compliance with the M/WBE Ordinance:

1. If the bidder or proposer has not fully met the project goal as provided in section 28-60, then it shall demonstrate that it has made good faith efforts to meet such goal. The bidder or proposer shall furnish to the director, within three (3) working days after bid opening by the City or on or before the time of the final project-specific proposal submitted to and authorized by the City pursuant to a competitive selection process, or bid selection by a private owner, a detailed statement of its good faith efforts to meet the project goal set by the director. This statement shall address each of the items in subsection (b) and any additional criteria that the director may establish by rule or regulation consistent with the purposes of this division 3. Good faith efforts must be demonstrated to be meaningful and not merely for formalistic compliance with this Division 3. The scope and intensity of the efforts will be considered in determining whether the bidder or proposer has achieved a good faith effort.

2. The statement of good faith efforts shall include a specific response and verification with respect to each of the following good faith effort categories, which may be further defined by rule or regulation. A bidder or proposer may include any additional information it believes may be relevant. Failure of a bidder or proposer to show good faith efforts as to any one (1) of the following categories shall render its overall good faith effort showing insufficient and its bid or proposal non-responsive:

a. If prebid or preselection meetings are scheduled by the City at which MBEs and WBEs may be informed of subcontracting or joint venture opportunities under a proposed contract to be bid, or procured pursuant to the competitive selection process, attendance at such prebid or preselection meetings is not mandatory; however, bidders and proposers are responsible for the information provided at these meetings.

b. The bidder or proposer must solicit through all reasonable and available means, the interest of all MBEs and WBEs certified in the scopes of work of the contract. The bidder or proposer must solicit the interest of such MBEs and WBEs within sufficient time, prior to the bid opening or date of final project-specific proposal in the case of a competitive selection process, to allow such MBEs and WBEs to respond to the solicitation. The bidder or proposer must determine with certainty if the MBEs and WBEs are interested by demonstrating appropriate steps to follow up initial solicitations.

c. The bidder or proposer must select portions of the work of the contract to be performed by MBEs and WBEs in order to increase the likelihood that the project goal will be achieved. This includes, where appropriate, breaking out contract work items into economically feasible units to facilitate MBE and WBE participation as subcontractors or joint venturers, and for bidder or proposer self-performed work, as suppliers, manufacturers, manufacturer's representatives and brokers, all reasonably consistent with industry practice, even when the bidder or proposer would otherwise prefer to perform these work items with its own forces. The bidder or proposer must identify what portions of the contract will be self-performed and what portions of the contract will be opened to solicitation of bids, proposals and quotes from MBE and WBEs. All portions of the contract not self-performed must be solicited for MBE and WBE participation. The ability or desire of a bidder or proposer to perform the work of a contract with its own forces does not relieve the bidder or proposer of the responsibility to meet the project goal or demonstrate good faith efforts to do so.

d. The bidder or proposer, consistent with industry practice, must provide MBEs and WBEs at a clearly stated location with timely, adequate access to and information about the plans, specifications, and requirements of the contract, including bonding and insurance requirements, if any, to assist them in responding to a solicitation.

e. The bidder or proposer must negotiate in good faith with interested MBEs and WBEs and provide written documentation of such negotiation with each such MBE or WBE.

f. For each MBE or WBE which contacted the bidder or proposer or which the bidder or proposer contacted or attempted to subcontract or joint venture with, consistent with industry practice, the bidder or proposer must supply a statement giving the reasons why the bidder or proposer and the MBE or WBE did not succeed in negotiating a subcontracting, supplier, manufacturer, manufacturer's representative, broker or joint venture agreement, as applicable.

3. The bidder or proposer must provide verification that it rejected each non-utilized MBE and WBE because the MBE or WBE did not submit the lowest bid or it was not qualified. Such verification shall include a verified statement of the amounts of all bids received from potential or utilized subcontractors, suppliers, manufacturers, manufacturer's representatives, brokers or joint venturers on the contract, whether or not they are MBEs or WBEs. In making such a determination of not being qualified, the bidder or proposer shall be guided by the definition of qualified in section 28-54(42), but evidence of lack of qualification must be based on factors other than solely the amount of the MBE's or WBE's bid. For each MBE or WBE found not to be qualified by the bidder or proposer, the verification shall include a statement giving the bidder's or proposer's reasons for its conclusion. A bidder's or proposer's industry standing or group memberships may not be the cause of rejection of an MBE or WBE. A bidder or proposer may not reject an MBE or WBE as being unqualified without sound reasons based on a reasonably thorough investigation and assessment of the MBE's or WBE's capabilities and expertise.

4. If requested by a solicited MBE or WBE, the bidder or proposer must make reasonable efforts to assist interested MBEs and WBEs in obtaining bonding, lines of credit, or insurance as required by the City or by the bidder or proposer, provided that the bidder or proposer need not provide financial assistance toward this effort.

5. If requested by a solicited MBE or WBE, the bidder or proposer must make reasonable efforts to assist interested MBEs and WBEs in obtaining necessary and competitively priced equipment, supplies, materials, or related assistance or services for performance under the contract, provided that the bidder or proposer need not provide financial assistance toward this effort.

6. The bidder or proposer must use the DSBO MBE/WBE directories to identify, recruit, and place MBEs and WBEs.

7. In determining whether a bidder or proposer has satisfied good faith efforts as to a project goal, the success or failure of other bidders or proposers on the contract in meeting such project goal may be considered.

Continuing Commitments.
In accordance with the provisions of the M/WBE Ordinance, the bidder agrees that it is committed to meeting either the M/WBE participation goal or the M/WBE participation set forth in its statement of good faith. This commitment must be expressly indicated on the "Commitment to MWBE SBE Participation" form included with the Bid Form. This commitment includes the following understandings:

1. The bidder understands it must maintain M/WBE goals throughout the performance of the Contract pursuant to the requirements set out in D.R.M.C. 28-72.

2. The bidder understands that it must establish and maintain records and submit regular reports, as required, which will allow the City to assess progress in achieving the M/WBE participation goal.

3. The bidder understands that if change orders or any other contract modifications are issued under the contract, the bidder shall have a continuing obligation to immediately inform DSBO in writing of any agreed upon increase or decrease in the scope of work of such contract, upon any of the bases discussed in Section 28-73 of the M/WBE Ordinance, regardless of whether such increase or decrease in scope of work has been reduced to writing at the time of notification.

4. The bidder understands that if change orders or other contract modifications are issued under the contract, that include an increase in scope of work of a contract for construction, reconstruction, or remodeling, whether by amendment, change order, force account or otherwise which increases the dollar value of the contract, whether or not such change is within the scope of work designated for performance by an M/WBE at the time of contract award, such change orders or contract modification shall be immediately submitted to DSBO for notification purposes. Those amendments, change orders, force accounts or other contract modifications that involve a changed scope of work that cannot be performed by existing project subcontractors or by the contractor shall be subject to a goal for M/WBEs equal to the original goal on the contract which was included in the bid. The contractor shall satisfy such goal with respect to such changed scope of work by soliciting new M/WBEs in accordance with Section 28-73 of the M/WBE Ordinance as applicable, or the contractor must show each element of modified good faith set out in Section 28-75(c) of the M/WBE Ordinance. The contractor shall supply to the director the documentation described in Section 28-75(c) of the M/WBE Ordinance with respect to the increased dollar value of the contract.

All bidders are charged with knowledge of and are solely responsible for complying with each and every provision of the M/WBE Ordinance in making a bid and, if awarded, in performing the work described in the Contract Documents. Failure to comply with these provisions could constitute cause for rejection of a bid or subject the selected contractor to sanctions set forth in the M/WBE Ordinance. These instructions are intended only to generally assist the bidder in preparing and submitting a compliant bid. Should any questions arise regarding specific circumstances, bidders must consult the M/WBE Ordinance or contact the Project's designated DSBO representative at (720) 913-1999.

IB- 26 DISCLOSURE OF INFORMATION

All submissions and other materials provided or produced pursuant to this Invitation for Bids may be subject to the Colorado Open Records Law, C.R.S. 24-72-201, et seq. As such, bidders are urged to review these disclosure requirements and any exceptions to disclosure of information furnished by another party and, prior to submission of a bid to the City, appropriately identify materials that are not subject to disclosure. In the event of a request to the City for disclosure of such information, the City shall advise the bidder of such request to give the bidder an opportunity to object to the disclosure of designated confidential materials furnished to the City. In the event of

the filing of a lawsuit to compel such disclosure, the City will tender all such material to the court for judicial determination of the issue of disclosure and each bidder agrees to intervene in such lawsuit to protect and assert its claims of privilege against disclosure of such material. Each bidder further agrees to defend, indemnify and save and hold harmless the City, its officers, agents and employees, from any claim, damages, expense, loss or costs arising out of the bidder's intervention to protect and assert its claims of privilege against disclosure under the Open Records Law including, but not limited to, prompt reimbursement to the City of all reasonable attorney fees, costs and damages that the City may incur directly or may be ordered to pay by such court.

IB-27 GENERAL BIDDING INFORMATION

Bidders are instructed to contact the Contract Administrator designated below for this Project for pre-bid, post-bid and general City bidding information. Bidders can also visit www.work4denver.com for information, both general and project specific. The Contract Administrator assigned to this project is Dani Abbott who can be reached via email at pw.procurement@denvergov.org.

IB-28 PAYMENT PROCEDURE REQUIREMENTS

Bidder recognizes and agrees that it shall be required to use the Textura® Construction Payment Management System ("Textura") for this Project to request payment from the City and to pay subcontractors. All certified subcontractors or suppliers who are listed for participation towards any assigned program goal must be paid via Textura. All fees associated with Textura are to be paid by the bidder for billings for work performed. Bidders are required, when preparing a bid, to enter the price of Textura on the line provided for the service. The fee is all inclusive of all subcontractor, project and subscription fees associated with Textura. The bidder will calculate the fee based on a percentage of their total bid, and then include it on the line item provided in the bid form labeled **"Textura® Construction Payment Management System Fee"**. This expense becomes part of the contract and billable to the City. All costs including, but not limited to, costs associated with training, entering data, and/or utilizing Textura other than the Textura Construction Payment Management System Fee are overhead and shall not be reimbursed by the City. Bidder will be responsible for any tax on the Textura fee. As with other taxes, the City will not reimburse bidder for this cost and therefore this cost should be included in bidder's bid. Textura will invoice the awarded bidder directly.

Project Value	Project Fee (GC + Sub Usage)
$250,000 - $499,999.99	$1,625
$500,000 - $999,999.99	$3,250
$1,000,000 - $2,999,999.99	$5,850
$3,000,000 - $4,999,999.99	$9,100
$5,000,000 - $9,999,999.99	$12,220
$10,000,000 - $19,999,999.99	$20,345
$20,000,000 - $49,999,999.99	$32,500
$50,000,000 - $99,999,999.99	$48,750
$100,000,000 - $199,999,999.99	$69,095
$200,000,000 - $299,999,999.99	$85,345
$300,000,000 - $399,999,999.99	$109,720
$400,000,000 - $499,999,999.99	$142,220
$500,000,000 - $999,999,999.99	$162,500
$1,000,000,000 - $1,999,999,999.99	$345,345
$2,000,000,000 - $4,999,999,999.99	$650,000
$5,000,000,000 - $9,999,999,999.99	$1,015,625
$10,000,000,000 or greater	$1,503,125

For more information:
http://www.denvergov.org/content/denvergov/en/contract-administration/bidding-process.html

RULES AND REGULATIONS
REGARDING
EQUAL EMPLOYMENT OPPORTUNITY

Promulgated and adopted by the Manager of Public Works pursuant to and by authority of Article III, Division 2, Chapter 28 of the Revised Municipal Code of the City and County of Denver, and for the purpose of insuring that contractors, subcontractors and suppliers soliciting and receiving compensation for contract work from or through the City and County of Denver provide equal opportunity in employment without regard to race, color, creed, sex, national origin, age, religion, marital status, political opinion or affiliation or mental or physical handicap and meet certain requirements for the hiring, training, promotion, and treatment during employment of members of ethnic groups subject to differential treatment, including persons of African descent (Black), Spanish-surnamed (Hispanic), Asian-American and American Indian Groups.

RULE I - *DEFINITIONS*

A. "City" means the City and County of Denver.

B. "Manager" shall mean the Manager of Public Works for the City and County of Denver.

C. "Contract" means a contract entered into with the City and County of Denver, financed in whole or in part by local resources or funds of the City and County of Denver, for the construction of any public building or prosecution or completion of any public work.

D. "Contractor" means the original party to a contract with the City and County of Denver, also referred to as the "general" or "prime" contractor.

E. "Director" means the Director of the Division of Small Business Opportunity.

F. "Subcontractor" means any person, company, association, partnership, corporation, or other entity which assumes by subordinate agreement some or all of the obligations of the general or prime contractor.

G. The phrase "Bidding Specifications" as used in Article III, Division 2 of Chapter 28 of the Revised Municipal Code shall include BID CONDITION, INVITATION TO BID, and NOTICE OF PROPOSAL.

H. "Affirmative Action Program" means a set of specific and result-oriented procedures or steps to which a contractor commits himself to apply every good faith effort to employ members of ethnic minority groups, to include persons of African descent (Black), Spanish surnamed (Hispanic), Asian-American, American Indians, and persons with mental or physical handicap.

I. "Division of Small Business Opportunity" means the City agency established pursuant to Article III, Division 1 of Chapter 28 of the Denver Revised Municipal Code.

RULE II - *NOTICE OF HEARING*

When results of conciliation efforts are unsatisfactory to the Manager and he is informed in accordance with Article III, Division 2 of Chapter 28 of the Revised Municipal code that a contractor or subcontractor has apparently failed to meet affirmative action and equal employment opportunity requirements after a reasonable period of notice to correct deficiencies, the Manager will , prior to imposition of any sanctions, afford the general contractor a hearing in order to determine whether the contractor or his subcontractors have failed to comply with the affirmative action and equal employment opportunity requirements of Article III, Division 2 of Chapter 28 of the Revised Municipal Code or of the contract. Written notice of such hearing shall be delivered personally or sent by certified mail, return receipt requested, to the contractor and to any subcontractor involved, at least ten (10) days prior to the date scheduled for the hearing.

RULE III - *HEARING*

A. Contractors will appear at hearings and may be represented by counsel, and may present testimony orally and other evidence.

B. Hearings shall be conducted by one or more hearing examiners designated as such by the Manager.

C. The Director of the Division of Small Business Opportunity may participate in hearings as a witness.

D. Hearings shall be held at the place specified in the notice of hearing.

E. All oral testimony shall be given under oath or affirmation and a record of such proceedings shall be made.

F. All hearings shall be open to the public.

G. The hearing officer shall make recommendations to the Manager who shall make a final decision.

REGULATIONS

REGULATION NO. 1 - ORDINANCE:

The Rules and Regulations of the Manager shall be inserted in the bidding specifications for every contract for which bidding is required.

REGULATION NO. 2 - EXEMPTIONS:

Each contract and subcontract, regardless of the dollar amount, shall be subject to affirmative action requirements unless specifically exempted in writing individually by the Manager. Exemptions apply only to "affirmative action" in equal employment opportunity, and are not to be construed as condonation in any manner of "discrimination" or "discriminatory practices" in employment because of race, color, creed, sex, age, national origin, religion, marital status, political opinion or mental or physical handicap.

REGULATION NO. 3 - DIRECTOR OF CONTRACT COMPLIANCE:

The Director of the Division of Small Business Opportunity shall perform the duties assigned to such official by Article III, Division 2 Chapter 28 of the Revised Municipal Code and by the Manager. (1) The Director of the Division of Small Business Opportunity or designated representatives shall inform bidders and contractors of affirmative action procedures, programs, and goals in accordance with the Ordinance at pre-bid and pre-construction conference; (2) make regular on-site inspections; (3) supply contractors and subcontractors with report forms to be completed by them when requested, and furnished to the Director of the Division of Small Business Opportunity; and (4) review payroll records, employment records and practices of general contractors and their subcontractors and suppliers during the performance of any contract. The Director of the Division of Small Business Opportunity shall promptly report apparent affirmative action deficiencies to the Manager.

REGULATION NO. 4 - GOALS AND TIMETABLES:

In general, goals and timetables should take into account anticipated vacancies and the availability of skills in the market place from which employees should be drawn. In addition, where discrimination in employment by a general contractor or any of his subcontractors is indicated, a corrective action program will take into account the need by the general contractor and his subcontractors to correct past discriminatory practices and reach goals of minority manpower utilization on a timely basis through such recruiting and advertising efforts as are necessary and appropriate.

REGULATION NO. 5 - AWARD OF CONTRACTS:

It shall be the responsibility of the Director of the Division of Small Business Opportunity to determine the affirmative action capability of bidders, contractors and subcontractors and to recommend to the Manager the award of contracts to those bidders, contractors and subcontractors and suppliers who demonstrate the ability and willingness to comply with the terms of their contract.

REGULATION NO. 6 - PUBLICATION AND DUPLICATION:

Copies of these Rules and Regulations as amended by the Manager from time to time, shall as soon as practicable and after Notice being published will be made a part of all City Contracts.

REGULATION NO. 7 - NOTICE TO PROCEED:

Prior to issuance of the Notice to Proceed a sign-off will be required of the Director of the Division of Small Business Opportunity or his designee.

REGULATION NO. 8 - CONTRACTS WITH SUBCONTRACTORS:

To the greatest extent possible, the contractor shall make a good faith effort to contract with minority contractors, subcontractors and suppliers for services and supplies by taking affirmative actions which include but are not limited to the following:

1. Advertise invitations for subcontractor bids in minority community news media.

2. Contact minority contractor organizations for referral of prospective subcontractors.

3. Purchase materials and supplies from minority material suppliers.

REGULATION NO. 9 - AGENCY REFERRALS:

It shall be no excuse that the union with which the contractor or subcontractor has an agreement providing for referral, exclusive or otherwise, failed to refer minority employees.

REGULATION NO. 10 - CLAUSES:

The Manager shall include the appropriate clauses in every contract and the contractor shall cause to be inserted in every subcontract the appropriate clauses:

1. APPENDIX A: City and County of Denver Equal Opportunity Clause - ALL CONTRACTS funded only with City and County of Denver monies.

2. APPENDIX B: Equal Opportunity Clause (11246) - ALL FEDERAL ASSISTED.

3. APPENDIX C: Section 3 - Assurance of Compliance - HUD ASSISTED PROJECTS.

4. APPENDIX D: Section 3 - Clause - HUD ASSISTED PROJECTS.

All amendments to the appendices shall be included by reference.

REGULATION NO. 11 - SHOW CAUSE NOTICES:

When the Manager has reasonable cause to believe that a contractor has violated Article III, Division 2 of Chapter 28 of the Denver Revised Municipal Code, he may issue a notice requiring the contractor to show cause, within fifteen (15) days why enforcement procedures, or other appropriate action to insure compliance, should not be instituted.

REGULATION NO. 12 - BID CONDITIONS - AFFIRMATIVE ACTION REQUIREMENTS - EQUAL EMPLOYMENT OPPORTUNITY:

1. APPENDIX E: The Bid Conditions - Affirmative Action Requirements - Equal Employment Opportunity as amended and published by the U.S. Department of Labor Employment Standards Administration, Office of Federal Contract Compliance, shall be inserted verbatim for bidding specification for every non-exempt contract involving the use of Federal funds.

2. APPENDIX F: The Bid Conditions - Affirmative Action Requirements - Equal Employment Opportunity as published by the Department of Public Works, City and County of Denver, shall be inserted verbatim as bidding specifications for every non-exempt contract using City funds.

CITY AND COUNTY OF DENVER
DEPARTMENT OF PUBLIC WORKS
ENGINEERING DIVISION

APPENDIX A

CITY AND COUNTY OF DENVER EQUAL OPPORTUNITY CLAUSE - ALL CONTRACTS

1. The Contractor will not discriminate against any employee or applicant for employment because of race, creed, color, sex, age, national origin, religion, marital status, political opinion or affiliation, or mental or physical handicap. The Contractor will take affirmative action to ensure that applicants are employed, and that employees are treated during employment without regard to their race, creed, color, sex, age, national origin, religion, marital status, political opinion or affiliation, or mental or physical handicap. Such action shall include, but not be limited to the following: employment, upgrading, demotion, or transfer; recruitment or recruitment advertising; layoff or termination; rates of pay or other forms of compensation; and selection for training, including apprenticeship. The Contractor agrees to post in conspicuous places, available to employees and applicants for employment, notices to be provided setting forth the provisions of this nondiscrimination clause.

2. The Contractor will, in all solicitations or advertisements for employees placed by or on behalf of the contractor, state that all qualified applicants will receive consideration for employment without regard to race, creed, color, sex, age, national origin, religion, marital status, political opinion or affiliation, or mental or physical handicap.

3. The Contractor will send to each labor union or representative of workers with which he has a collective bargaining agreement or other contract or understanding, a notice to be provided, advising the said labor union or workers' representatives of the contractor's commitments under this section, and shall post copies of the notice in conspicuous places available to employees and applicants for employment.

4. Each Contractor will comply with all provisions of Article III, Division 2 of Chapter 28 of the Revised Municipal Code, and the rules, regulations, and relevant orders of the Manager and the Director.

5. The Contractor will furnish all information and reports required by Article III, Division 2 of Chapter 28 of the Revised Municipal Code, and by rules, regulations and orders of the Manager and Director or pursuant thereto, and will permit access to his books, records, and accounts by the Manager, Director, or their designee for purposes of investigation to ascertain compliance with such rules, regulations, and orders.

6. In the event of the Contractor's noncompliance with the nondiscrimination clauses of this contract or with any of the said rules, regulations or orders, this contract may be canceled, terminated, or suspended in whole or in part and the Contractor may be declared ineligible for further City contracts in accordance with procedures authorized in Article III, Division 2, Chapter 28 of the Revised Municipal Code, or by rules, regulations, or order of the Manager.

7. The Contractor will include Regulation 12, Paragraph 2 and the provisions of paragraphs (1) through (6) in every subcontract of purchase order unless exempted by rules, regulations, or orders of the Manager issued pursuant to Article III, Division 2, Chapter 28 of the Revised Municipal Code, so that such provisions will be binding on each subcontractor or supplier. The Contractor will take such action with respect to any subcontract or purchase order as the administering agency may direct as a means of enforcing such provisions, including sanctions for noncompliance.

   The applicant further agrees to be bound by the above equal opportunity clauses with respect to its own employment practices when it participates in City contracts. The Contractor agrees to assist and cooperate actively with the Manager and the Director in obtaining compliance of subcontractors and suppliers with the equal opportunity clause and the rules, regulations and relevant orders of the Manager, and will furnish the Manager and the Director such information as they may require for the supervision of compliance, and will otherwise assist the Manager and Director in the discharge of the City's primary responsibility for securing compliance. The Contractor further agrees to refrain from entering into any contract or contract modification subject to Article III, Division 2

of Chapter 28 of the Revised Municipal Code with a contractor debarred from, or who has not demonstrated eligibility for, City contracts.

The Contractor will carry out such sanctions and penalties for violation of the equal opportunity clause as may be imposed upon contractors and subcontractors by the Manager and Director. In addition, the Contractor agrees that failure or refusal to comply with these undertakings the Manager may take any or all of the following actions:

A. Cancellation, termination, or suspension in whole or in part of this contract.

B. Refrain from extending any further assistance to the applicant under the program with respect to which the failure occurred until satisfactory assurance of future compliance has been received from such applicant.

C. Refer the case to the City Attorney for appropriate legal proceedings.

SUBCONTRACTS: Each prime Contractor or Subcontractor shall include the equal opportunity clause in each of its subcontracts.

CITY AND COUNTY OF DENVER
DEPARTMENT OF PUBLIC WORKS
ENGINEERING DIVISION

APPENDIX F

AFFIRMATIVE ACTION REQUIREMENTS

EQUAL EMPLOYMENT OPPORTUNITY

For All Non-Exempt Construction Contracts to Be Awarded by the
City and County of Denver, Department of Public Works.

NOTICE

EACH BIDDER, CONTRACTOR OR SUBCONTRACTOR (HEREINAFTER THE CONTRACTOR) MUST FULLY COMPLY WITH THE REQUIREMENTS OF THESE BID CONDITIONS AS TO EACH CONSTRUCTION TRADE IT INTENDS TO USE ON THIS CONSTRUCTION CONTRACT, AND ALL OTHER CONSTRUCTION WORK (BOTH CITY AND NON-CITY) IN THE DENVER AREA DURING THE PERFORMANCE OF THIS CONTRACT OR SUBCONTRACT. THE CONTRACTOR COMMITS ITSELF TO THE GOALS FOR MINORITY MANPOWER UTILIZATION, AS APPLICABLE, AND ALL OTHER REQUIREMENTS, TERMS AND CONDITION OF THESE BID CONDITIONS BY SUBMITTING A PROPERLY SIGNED BID.

THE CONTRACTOR SHALL APPOINT A COMPANY EXECUTIVE TO ASSUME THE RESPONSIBILITY FOR THE IMPLEMENTATION OF THE REQUIREMENTS, TERMS AND
CONDITIONS OF THESE BID CONDITIONS.

/s/

Manager of Public Works
City and County of Denver

A. REQUIREMENTS - AN AFFIRMATIVE ACTION PLAN:

Contractors shall be subject to the provisions and requirements of these bid conditions including the goals and timetables for minority* and female utilization, and specific affirmative action steps set forth by the Office of Contract Compliance. The contractor's commitment to the goals for minority, and female utilization as required constitutes a commitment that it will make every good faith effort to meet such goals.

1. GOALS AND TIMETABLES:

The goals and timetables for minority and female participation, expressed in percentage terms for the contractor's aggregate workforce in each trade are as follows:

GOALS FOR MINORITY PARTICIPATION FOR EACH TRADE	FEMALE PARTICIPATION FOR EACH TRADE
From January 1, 1982 to Until Further Notice	From January 1, 1982 to Until Further Notice
21.7% - 23.5% GOALS FOR	6.9%

The goals for minority and female utilization above are expressed in terms of hours of training and employment as a proportion of the total number of hours to be worked by the contractor's aggregate workforce, which includes all supervisory personnel, in each trade, on all projects for the City and County of Denver during the performance of its contract (i.e., The period beginning with the first day of work on the City and County of Denver funded construction contract and ending with the last day of work).

The hours of minority and female employment and training must be substantially uniform throughout the length of the contract in each trade and minorities and females must be employed evenly on each of a contractor's projects. Therefore, the transfer of minority or female employees from contractor to contractor or from project to project for the purpose of meeting the contractor's goals shall be a violation of these Bid Conditions.

If the Contractor counts the nonworking hours of apprentices they must be employed by the Contractor during the training period; the Contractor must have made a commitment to employ apprentices at the completion of their training subject to the availability of employment opportunities; and the apprentices must be trained pursuant to training programs approved by the Bureau of Apprenticeship and Training.

* "Minority" is defined as including, Blacks, Spanish Surname Americans, Asian-Americans, and American Indians, and includes both men and minority women.

2. SPECIFIC AFFIRMATIVE ACTION STEPS:

No contractor shall be found to be in noncompliance solely on account of its failure to meet its goals, but will be given an opportunity to demonstrate that the contractor has instituted all the specific affirmative action steps specified and has made every good faith effort to make these steps work toward the attainment of its goals within the timetables, all to the purpose of expanding minority and female utilization in its aggregate workforce. A contractor, who fails to comply with its obligation under the Equal Opportunity Clause of its contract and fails to achieve its commitments to the goals for minority and female utilization has the burden of proving that it has engaged in an Affirmative Action Program directed at increasing minority and female utilization and that such efforts were at least as extensive and as specific as the following:

a. The Contractor should have notified minority and female organizations when employment opportunities were available and should have maintained records of the organization's response.

b. The Contractor should have maintained a file of the names and addresses of each minority and female referred to it by any individual or organization and what action was taken with respect to each such referred individual, and if the individual was not employed by the Contractor, the reasons. If such individual was sent to the union hiring hall for referral and

not referred back by the union or if referred, not employed by the Contractor, the file should have documented this and their reasons.

c. The Contractor should have promptly notified the Department of Public Works, and the Division of Small Business Opportunity when the union or unions with which the Contractor has collective bargaining agreements did not refer to the contractor a minority or female sent by the contractor, or when the Contractor has other information that the union referral process has impeded efforts to meet its goals.

d. The Contractor should have disseminated its EEO policy within its organization by including it in any employee handbook or policy manual; by publicizing it in company newspapers and annual reports and by advertising such policy at reasonable intervals in union publications. The EEO policy should be further disseminated by conducting staff meetings to explain and discuss the policy; by posting of the policy; and by review of the policy with minority and female employees.

e. The Contractor should have disseminated its EEO policy externally by informing and discussing it with all recruitment sources; by advertising in news media, specifically including minority and female news media; and by notifying and discussing it with all subcontractors.

f. The Contractor should have made both specific and reasonably recurrent written and oral recruitment efforts. Such efforts should have been directed at minority and female organizations, schools with substantial minority and female enrollment, and minority and female recruitment and training organizations within the Contractor's recruitment area.

g. The Contractor should have evidence available for inspection that all tests and other selection techniques used to select from among candidates for hire, transfer, promotion, training, or retention are being used in a manner that does not violate the OFCCP Testing Guidelines in 41 CFR Part 60-3.

h. The Contractor should have made sure that seniority practices and job classifications do not have a discriminatory effect.

i. The Contractor should have made certain that all facilities are not segregated by race.

j. The Contractor should have continually monitored all personnel activities to ensure that its EEO policy was being carried out including the evaluation of minority and female employees for promotional opportunities on a quarterly basis and the encouragement of such employees to seek those opportunities.

k. The Contractor should have solicited bids for subcontracts from available minority and female subcontractors engaged in the trades covered by these Bid Conditions, including circulation of minority and female contractor associations.

NOTE: The Director and the Division of Small Business Opportunity will provide technical assistance on questions pertaining to minority and female recruitment sources, minority and female community organizations, and minority and female news media upon receipt of a request for assistance from a contractor.

3. NON - DISCRIMINATION:

In no event may a contractor utilize the goals and affirmative action steps required in such a manner as to cause or result in discrimination against any person on account of race, color, religion, sex, marital status, national origin, age, mental or physical handicap, political opinion or affiliation.

4. **COMPLIANCE AND ENFORCEMENT:**
In all cases, the compliance of a contractor will be determined in accordance with its obligations under the terms of these Bid Conditions. All contractors performing or to perform work on projects subject to these Bid Conditions hereby agree to inform their subcontractors in writing of their respective obligations under the terms and requirements of these Bid Conditions, including the provisions relating to goals of minority and female employment and training.

B. CONTRACTORS SUBJECT TO THESE BID CONDITIONS:
In regard to these Bid Conditions, if the Contractor meets the goals set forth therein or can demonstrate that it has made every good faith effort to meet these goals, the Contractor shall be presumed to be in compliance with Article III, Division 2 of Chapter 28 of the Revised Municipal Code, the implementing regulations and its obligations under these Bid Conditions. In the event, no formal sanctions or proceedings leading toward sanctions shall be instituted unless the contracting or administering agency otherwise determines that the contractor is violating the Equal Opportunity Clause.

1. Where the Office of Contract Compliance finds that a contractor failed to comply with the requirements of Article III, Division 2 of Chapter 28 of the Revised Municipal Code or the implementing regulations and the obligations under these Bid Conditions, and so informs the Manager, the Manager shall take such action and impose such sanctions, which include suspension, termination, cancellation, and debarment, as may be appropriate under the Ordinance and its regulations. When the Manager proceeds with such formal action it has the burden of proving that the Contractor has not met the goals contained in these Bid Conditions. The Contractor's failure to meet its goals shall shift to it the requirement to come forward with evidence to show that it has met the good faith requirements of these Bid Conditions.

2. The pendency of such proceedings shall be taken into consideration by the Department of Public Works in determining whether such contractor can comply with the requirements of Article III, Division 2 of Chapter 28 of the Revised Municipal Code, and is therefore a "responsible prospective contractor".

3. The Division of Small Business Opportunity shall review the Contractor's employment practices during the performance of the contract. If the Division of Small Business Opportunity determines that the Contractor's Affirmative Action Plan is no longer an acceptable program, the Director shall notify the Manager.

C. OBLIGATIONS APPLICABLE TO CONTRACTORS:
It shall be no excuse that the union with which the Contractor has a collective bargaining agreement providing for exclusive referral failed to refer minority or female employees. Discrimination in referral for employment, even if pursuant to provisions of a collective bargaining agreement, is prohibited by the National Labor Relations Act, as amended, Title VI of the Civil Rights Act of 1964, as amended, and Article III, Division 2 of Chapter 28 of the Revised Municipal Code. It is the policy of the Department of Public Works that contractors have a responsibility to provide equal employment opportunity, if they wish to participate in City and County of Denver contracts. To the extent they have delegated the responsibility for some of their employment practices to a labor organization and, as a result, are prevented from meeting their obligations pursuant to Article III, Division 2, Chapter 28 of the Revised Municipal Code, such Contractors cannot be considered to be in compliance with Article III, Division 2, Chapter 28 of the Revised Municipal Code, or its implementing rules and regulations.

D. GENERAL REQUIREMENTS:
Contractors are responsible for informing their subcontractors in writing regardless of tier, as to their respective obligations. Whenever a Contractor subcontracts a portion of work in any trade covered by these Bid Conditions, **it shall include these Bid Conditions in such subcontracts and each subcontractor shall be bound by these Bid Conditions to the full extent as if it were the prime contractor.** The Contractor shall not, however, be held accountable for the failure of its subcontractors to fulfill their obligations under these Bid Conditions. However, the prime contractor shall give notice to the Director of any refusal or failure of any subcontractor to fulfill the obligations under these Bid Conditions. A subcontractor's failure to comply will be treated in the same manner as such failure by a prime contractor.

1. Contractors hereby agree to refrain from entering into any contract or contract modification subject to Article III, Division 2, Chapter 28 of the Revised Municipal Code with a contractor debarred from, or who is determined not to be a "responsive" bidder for the City and County of Denver contracts pursuant to the Ordinance.

2. The Contractor shall carry out such sanctions and penalties for violation of these Bid Conditions and the Equal Opportunity Clause including suspension, termination and cancellation of existing subcontracts and debarment from future contracts as may be ordered by the Manager pursuant to Article III, Division 2, Chapter 28 of the Revised Municipal Code and its implementing regulations.

3. Nothing herein is intended to relieve any contractor during the term of its contract from compliance with Article III, Division 2, Chapter 28 of the Revised Municipal Code, and the Equal Opportunity Clause of its contract with respect to matters not covered in these Bid Conditions.

4. Contractors must keep such records and file such reports relating to the provisions of these Bid Conditions as shall be required by the Office of Contract Compliance.

5. Requests for exemptions from these Bid Conditions must be made in writing, with justification, to the Manager of Public Works, City and County Building, Room 379, Denver, Colorado 80202, and shall be forwarded through and with the endorsement of the Director.

CITY AND COUNTY OF DENVER
DEPARTMENT OF PUBLIC WORKS

CONTRACT NO. 201845992

2018 Directional Boring Master On-Call

CONTRACT

THIS CONTRACT AND AGREEMENT, made and entered into by and between the City and County of Denver, a municipal corporation of the State of Colorado, hereinafter referred to as the "City," party of the first part, and hereinafter referred to as the "Contractor," party of the second part,

GLOBAL UNDERGROUND CORPORATION
641 Winters Dr.
Colorado Springs, CO 80907

WITNESSETH, commencing on **September 25, 2018,** and for at least three (3) days the City advertised that sealed bids would be received for furnishing all labor, tools, supplies, equipment, materials, and everything necessary and required for the following:

CONTRACT NO. 201845992
2018 Directional Boring Master On-Call

WHEREAS, bids pursuant to said advertisement have been received by the Manager of Public Works, who has recommended that a Contract for said work be made and entered into with the above named Contractor who was the lowest, responsive, qualified bidder therefore, and

WHEREAS, said Contractor is now willing and able to perform all of said work in accordance with said advertisement and its bid.

NOW THEREFORE, in consideration of the compensation to be paid the Contractor, the mutual agreements hereinafter contained, and subject to the terms hereinafter stated, it is mutually agreed as follows:

1. CONTRACT DOCUMENTS

It is agreed by the parties hereto that the following list of documents, instruments, technical specifications, plans, drawings and other materials which are attached hereto and bound herewith, incorporated herein by reference or otherwise referenced in these documents constitute and shall be referred to either as the "Contract Documents" or the "Contract," and all of said documents, instruments, technical specifications, Plans, Drawings and other materials taken together as a whole constitute the Contract between the parties hereto, and they are as fully a part of this agreement as if they were set out verbatim and in full herein:

Advertisement of Notice of Invitation for Bids
Instructions to Bidders
Commitment to M/WBE Participation
Article III, Division 1and 3 of Chapter 28, D.R.M.C.
Bid Bond
Addenda (as applicable)
Equal Employment Opportunity Provisions (Appendix A and Appendix F)
Bid Form
Contract Form
General Contract Conditions
Special Contract Conditions
Performance and Payment Bond
Notice to Apparent Low Bidder

Notice to Proceed
Contractor's Certification of Payment Form
Final/Partial Lien Release Form
Final Receipt
Change Orders (as applicable)
Federal Requirements (as applicable)
Prevailing Wage Rate Schedule(s)
Technical Specifications
Contract Drawings
Authorized Work Orders (including proposal pricing requests and attachments, pricing proposals and any clarifications or modifications)

2. SCOPE OF WORK

The Contractor agrees to and shall furnish all labor, tools, supplies, equipment, materials and everything necessary for and required to do, perform and complete all of the Work described, drawn, set forth, shown and included in said Contract Documents.

Each of these Projects shall be separately scoped, designed (as necessary), priced, authorized and completed under the direct oversight of the Department of Public Works. The contractor shall have all necessary resources available, on an as needed basis, to complete each such Project when directed by the City during the three (3) year term of the contract, in accordance with the terms and conditions of the On Call Contract Documents.

In order to establish a competitive bidding environment for bidders seeking to perform this Work, the City devised a representative scope of services comprised of work items and units which the City anticipated the successful bidder may be required to perform on the various projects to which the contractor is assigned during the term of this Contract. Each bidder provided a unit price for each representative work item, at the units provided.

The manner in which the projects will be identified and assigned will be as follows:

1. Individual projects will be identified and their specific scope of Work will be explained in detail on drawings and supplemental specifications issued to the contractor in the form of a Proposal Pricing Request.

2. The Contractor will thoroughly review the scope of Work and provide a price (in the format provided by the City) and a project schedule responsive to each Proposal Request. The bid unit prices must be used for all work that corresponds with the unit price descriptions. Work elements that are not covered by any unit prices shall be priced with using the format and cost categories for labor, material and equipment specified herein. For additional information relating to preparation of Proposal Request pricing refer to Special Contract Conditions.

3. Prior to submitting a price, the contractor shall inspect the work site and its surroundings. Although the contractor is not required to make such an inspection before bidding, for purposes of the Contract it shall be conclusively presumed that by failing to make such an inspection, the contractor has waived the right to later claim additional compensation or time extensions for conditions which would have been evident had the site been inspected.

   Drawings and Technical Specifications, defining the scope of Work to be done, were prepared on the basis of interpretation by the design professionals of information derived from investigations of the work site. Such information and data are subject to sampling errors, and the interpretation of the information and data depends to a degree on the judgment of the design professional. In view of this, the bidder is invited to make such additional investigations as the bidder's judgment dictates the need for such investigations. Information about the degree of difficulty of the scope of Work to be done cannot totally be derived from either the Drawings and Technical Specifications or from the Manager or his representatives.

   Since the proposal pricing information cannot be guaranteed, the Contractor shall have assumed the risks attendant to successful performance of the scope of Work and shall never make claim for

additional compensation or time extensions on the grounds that the nature or amount of work to be done was not understood by the contractor at the time of pricing.

4. Upon receipt of the Proposal Request pricing worksheet from the Contractor, negotiation of non-unit price items and agreement on the total price, schedule and any other specific requirements for the requested scope of Work, a Work Order for the specific project will be issued by the City authorizing the Work under the terms and conditions set forth therein and encumbering funds for such Work.

5. Upon receipt of a Work Order Notice to Proceed, the Contractor shall have ten (10) consecutive calendar days to commence the work.

6. During the course of the Work on each Work Order, the Contractor shall submit regular pay applications. The City shall issue payment for Work completed in accordance with the terms and conditions of the Contract Documents.

7. If additions, deletions or other modifications to the scope of Work is required or desired by the City on a particular project authorized by Work Order, a Work Order Change will be issued based on pricing prepared in the same manner as a Proposal Request and under the terms and conditions for issuance of a Change Order under the General Contract Conditions. The Work Order Change will identify any increase or decrease in the cost, change in the period of performance and any other modifications to the performance requirements for that particular Work Order.

8. Upon satisfactory completion and final acceptance of each Work Order, a Final Receipt will be issued and final payment for the Work Order will be made.

9. It is possible that more than one Work Order may be issued and under construction at the same time.

The Contractor agrees to price all Work described in any Proposal Pricing Request issued hereunder, in accordance with the unit price bids for covered items and the terms and conditions contained herein and further agrees to and shall furnish all labor, tools, supplies, equipment, materials and everything necessary for and required to do, perform and complete all of the Work described in any Work Order issued by the City in accordance with the terms and conditions set forth herein.

3. TERMS OF PERFORMANCE

For any Proposal Pricing Request submitted to the Contractor by the City for pricing, the Contractor agrees to review and, in good faith, submit comprehensive prices for each such Request within fourteen (14) consecutive calendar days of the date of issuance of such Request. In the event the City elects, at its sole discretion, to issue a Work Order pursuant to such a Request, the Contractor agrees to undertake the performance of the specified Work within ten (10) consecutive calendar days of the issuance of a Notice to Proceed for the referenced Work Order. The Contractor agrees to satisfactorily perform and complete all Work or effort required to complete the Work described in each issued Work Order within the period of performance specified in the Work Order and Notice to Proceed, plus such extensions of time as may be granted by the Manager in accordance with the provisions of the General Contract Conditions and Special Contract Conditions incorporated herein.

4. TERMS OF PAYMENT

The City agrees to pay the Contractor for the performance of all of the Work required under each authorized Work Order in accordance with the General Contract Conditions and Special Contract Conditions. In no event, however, shall the total amount of compensation paid to the Contractor by the City exceed the maximum contract amount specified herein.

5. NO DISCRIMINATION IN EMPLOYMENT

In connection with the performance of work under this contract, the Contractor may not refuse to hire, discharge, promote or demote, or discriminate in matters of compensation against any person otherwise qualified, solely because of race, color, religion, national origin, gender, age, military status, sexual orientation, gender identity or gender expression, marital status, or physical or mental disability. The Contractor shall insert the foregoing provision in all subcontracts.

6. **COMPLIANCE WITH M/WBE REQUIREMENT**

This Contract is subject to all applicable provisions of Article III, Divisions 1and 3 of Chapter 28, Denver Revised Municipal Code (D.R.M.C.), designated as Sections 28-31 – 28-36 and 28-52 – 28-90 D.R.M.C. and referred to in this Contract as the "M/WBE Ordinance". Without limiting the general applicability of the foregoing, the Contractor acknowledges its continuing duty, pursuant to Sections 28-72, 28-73 and 28-75 of the D.R.M.C., to maintain throughout the duration of this Contract, compliance with the level of minority and Woman business enterprise participation, upon which the City approved the award of this Contract to the Contractor and the Contractor further acknowledges that failure to maintain such participation commitments or otherwise comply with the requirements of the M/WBE Ordinance shall subject the Contractor to sanctions in accordance with Section 28-77 of the D.R.M.C. Nothing contained in this provision or in the M/WBE Ordinance shall negate the City's right to prior approval of subcontractors, or substitutes therefore, under this Contract

7. **WAGE RATE REQUIREMENTS**

In performance of all Work hereunder, the Contractor agrees to comply with and be bound by all requirements and conditions of the City's Payment of Prevailing Wages Ordinance, Sections 20-76 through 20-79, D.R.M.C. and any determinations made by the City pursuant thereto.

8. **APPLICABILITY OF LAWS**

The Agreement between the Contractor and the City shall be deemed to have been made in the City and County of Denver, State of Colorado and shall be subject to, governed by, and interpreted and construed by or in accordance with the laws of the State of Colorado and the Charter, Revised Municipal Code, Rules, Regulations, Executive Orders and fiscal rules of the City. As such, the Contractor shall at all times comply with the provisions of the Charter, Revised Municipal Code, Rules, Regulations, Executive Orders and fiscal rules of the City, and those State of Colorado and Federal Laws, Rules and Regulations, which in any manner limit, control or apply to the actions or operations of the Contractor, any subcontractors, employees, agents or servants of the Contractor engaged in the Work or affecting the materials and equipment used in the performance of the Work, as the same may be, from time to time, promulgated, revised or amended. The Charter and Revised Municipal Code of the City and County of Denver, as the same may be amended from time to time, are hereby expressly incorporated into this Agreement as if fully set out herein by this reference.

9. **APPROPRIATION**

The amount of money that has been appropriated and encumbered for the purpose of this contract, to date, is equal to or in excess of the Contract Amount. The Manager, upon reasonable written request, will advise the Contractor in writing of the total amount of appropriated and encumbered funds that remain available for payment for all Work under the Contract.

The issuance of any change order or other form or order or directive by the City which would cause the aggregate payable under the contract to exceed the amount appropriated for the contract is expressly prohibited. In no event shall the issuance of any change order or other form of order or directive by the City be considered valid or binding if it requires additional compensable work to be performed, which work will cause the aggregate amount available under the Contract to exceed the amount appropriated and encumbered for this Contract, unless and until such time as the Contractor has been advised in writing by the Manager that a lawful appropriation, sufficient to cover the entire cost of such additional work, has been made.

It shall be the responsibility of the Contractor to verify that the amounts already appropriated for this Contract are sufficient to cover the entire cost of such work, and any work undertaken or performed in excess of the amount appropriated is undertaken or performed in violation of the terms of this contract, without the proper authorization for such work, and at the Contractor's own risk.

10. **APPROVALS**

In the event this Contract calls for the payment by the City of five hundred thousand dollars ($500,000.00) or more, approval by the Board of Councilmen of the City and County of Denver, acting by ordinance, in accordance with Section 3.2.6 of the Charter of the City and County of Denver, is and shall be an express condition precedent to the lawful and binding execution and effect and performance of this contract.

11. ASSIGNMENT

The Contractor shall not assign any of its rights, benefits, obligations or duties under this Contract except upon the prior written consent and approval of the Manager to such assignment.

12. DISPUTE RESOLUTION PROCESS

It is the express intention of the parties to this Contract that all disputes of any nature whatsoever regarding the Contract including, but not limited to, any claims for compensation or damages arising out of breach or default under this Contract, shall be resolved by administrative hearing pursuant to the provisions of Section 56-106, D.R.M.C., or, as applicable, Section 28-33 D.R.M.C. for Minority/Woman Business Enterprise disputes. The Contractor expressly agrees that this dispute resolution process is the only dispute resolution mechanism that will be recognized by the parties for any claims put forward by the Contractor, notwithstanding any other claimed theory of entitlement on the part of the Contractor or its subcontractors or suppliers.

13. CONTRACT BINDING

It is agreed that this Contract shall be binding on and inure to the benefit of the parties hereto, their heirs, executors, administrators, assigns and successors.

14. PARAGRAPH HEADINGS

The captions and headings set forth herein are for convenience of reference only and shall not be construed so as to define or limit the terms and provisions hereof.

15. SEVERABILITY

It is understood and agreed by the parties hereto that, if any part, term, or provision of this Contract, except for the provisions of this Contract requiring prior appropriation and limiting the total amount to be paid by the City, is by the courts held to be illegal or in conflict with any law of the State of Colorado, the validity of the remaining portions or provisions shall not be affected, and the rights and obligations of the parties shall be construed and enforced as if the Contract did not contain the particular part, term or provision held to be invalid.

16. MAXIMUM CONTRACT AMOUNT AND TERM

The maximum Contract Amount to be paid by the City to the Contractor for all Work performed under this Contract shall in no event exceed the sum of **Three Million Dollars and Zero Cents ($3,000,000)** unless this Contract is modified to increase said amount by a duly authorized, written contract amendment mutually agreeable to and executed by the parties hereto. The term of this agreement shall be three (3) years from the date of execution of this Contract. Any work order issued prior to the expiration of the term shall be performed to completion, even if such performance extends beyond the expiration date and the term of the contract shall be extended to accommodate completion of all outstanding work orders. Additionally, the contract may be extended by a mutually agreeable contract amendment initiated at the sole discretion of the City. Each project will be assigned and authorized separately and no authorized Project cost will exceed **Four Hundred Fifty Thousand Dollars and No Cents ($450,000.00).**

17. ELECTRONIC SIGNATURES AND ELECTRONIC RECORDS:

Contractor consents to the use of electronic signatures by the City. The Agreement, and any other documents requiring a signature hereunder, may be signed electronically by the City in the manner specified by the City. The Parties agree not to deny the legal effect or enforceability of the Agreement solely because it is in electronic form or because an electronic record was used in its formation. The Parties agree not to object to the admissibility of the Agreement in the form of an electronic record, or a paper copy of an electronic document, or a paper copy of a document bearing an electronic signature, on the ground that it is an electronic record or electronic signature or that it is not in its original form or is not an original.

CITY AND COUNTY OF DENVER
DEPARTMENT OF PUBLIC WORKS

General Contract Conditions

INDEX

TITLE 1
DEFINITIONS **1**
101 CITY 1
102 CONTRACT 1
103 CONTRACT AMOUNT 1
104 CONTRACT DOCUMENTS 1
105 CONTRACT TIME 1
106 CONTRACTOR 2
107 CONTRACTOR PERSONNEL 2
108 DAYS 2
109 DEPUTY MANAGER 2
110 DESIGNER 2
111 FINAL COMPLETION 2
112 MANAGER 3
113 PRODUCT DATA 3
114 PROJECT 3
115 PROJECT MANAGER 3
116 SAMPLES 3
117 SHOP DRAWINGS 3
118 SUBCONTRACTOR 3
119 SUBSTANTIAL COMPLETION 3
120 SUPPLIER 4
121 WORK 4

TITLE 2
CITY ADMINISTRATIVE ORGANIZATIONS; LINE OF AUTHORITY **5**
201 DEPARTMENT OF AVIATION 5
202 MANAGER OF AVIATION 5
203 DEPARTMENT OF PUBLIC WORKS 5
204 MANAGER OF PUBLIC WORKS 5
205 BUILDING INSPECTION 5
206 ZONING 5
207 DIVISION OF SMALL BUSINESS OPPORTUNITY 6
208 CITY AUDITOR 6
209 MANAGER OF FINANCE 6
210 CITY ATTORNEY 6
211 OFFICE OF RISK MANAGEMENT 6
212 CITY'S CONTRACT ADMINISTRATION LINE OF AUTHORITY 6
213 CITY'S COMMUNICATION WITH THE CONTRACTOR 7

TITLE 3
CONTRACTOR PERFORMANCE AND SERVICES 8
301 CONSIDERATION (CONTRACTOR'S PROMISE OF PERFORMANCE) 8
302 NOTICE TO PROCEED AND COMPLETION OF THE WORK 8
303 EXACT CONTRACTOR PERFORMANCE 8
304 SUBSTITUTED PERFORMANCE 8
305 WORK PERFORMED UNDER ADVERSE WEATHER CONDITIONS 9
306 WORKING HOURS AND SCHEDULE 9
307 CONTRACTOR'S SUPERINTENDENT 10
308 COMMUNICATIONS 10
309 CONTRACTOR SUBMITTALS AND OTHER WRITTEN COMMUNICATIONS TO THE CITY 10
310 COMPETENCE OF CONTRACTOR'S WORK FORCE 11
311 NO EMPLOYMENT OF ILLEGAL ALIENS TO PERFORM WORK UNDER THE CONTRACT 11
312 CONDUCT OF CONTRACTOR'S PERSONNEL 12
313 SUGGESTIONS TO CONTRACTOR 12
314 WORK FORCE 12
315 CONSTRUCTION MACHINES AND STANDBY EQUIPMENT 13
316 CUTTING AND PATCHING THE WORK 13
317 PERMITS AND LICENSES 13
318 CONSTRUCTION SURVEYS 14
319 PRESERVATION OF PERMANENT LAND SURVEY CONTROL MARKERS 14
320 TRADEMARKS, COPYRIGHTS AND PATENTED DEVICES, MATERIALS, AND PROCESSES 15
321 PROJECT SIGNS 15
322 PUBLICITY AND ADVERTISING 16
323 TAXES 16
324 DOCUMENTS AND SAMPLES AT THE SITE 17
325 CLEANUP DURING CONSTRUCTION 17
326 SANITARY FACILITIES 18
327 POWER, LIGHTING, HEATING, VENTILATING, AIR CONDITIONING AND WATER SERVICES 18

TITLE 4
CONTRACT DOCUMENTS (DRAWINGS AND TECHNICAL SPECIFICATIONS) 19
401 CONTRACT DOCUMENTS - REVIEW AND INTERPRETATION 19
402 OWNERSHIP OF CONTRACT DRAWINGS AND TECHNICAL SPECIFICATIONS 20
403 CONTRACT DRAWINGS AND TECHNICAL SPECIFICATIONS ISSUED TO THE CONTRACTOR 20
404 REQUESTS FOR INFORMATION OR CLARIFICATION 21
405 SHOP DRAWINGS, PRODUCT DATA AND SAMPLES 21
406 SUBSTITUTION OF MATERIALS AND EQUIPMENT 22

TITLE 5
SUBCONTRACTS 24
501 SUBCONTRACTS 24
502 SUBCONTRACTOR ACCEPTANCE 24

TITLE 6
TIME OF COMMENCEMENT AND COMPLETION 27
601 BEGINNING, PROGRESS AND TIME OF COMPLETION 27
602 LIQUIDATED DAMAGES; ADMINISTRATIVE COSTS; ACTUAL DAMAGES 27

603 DELAY DAMAGES 28

TITLE 7
COOPERATION, COORDINATION AND RATE OF PROGRESS 29
701 COOPERATION WITH OTHER WORK FORCES 29
702 COORDINATION OF THE WORK 30
703 COORDINATION OF PUBLIC CONTACT 30
704 RATE OF PROGRESS 30

TITLE 8
PROTECTION OF PERSONS AND PROPERTY 32
801 SAFETY OF PERSONS 32
802 PROTECTIVE DEVICES AND SAFETY PRECAUTIONS 33
803 PROTECTION OF PROPERTY AND WORK IN PROGRESS 33
804 PROTECTION OF MUNICIPAL, PUBLIC SERVICE OR PUBLIC UTILITY SYSTEMS 34
805 PROTECTION OF STREET AND ROAD SYSTEM 35
806 PROTECTION OF DRAINAGE WAYS 36
807 PROTECTION OF THE ENVIRONMENT 36
808 HAZARDOUS AND EXPLOSIVE MATERIALS OR SUBSTANCES 37
809 ARCHAEOLOGICAL AND HISTORICAL DISCOVERIES 37

TITLE 9
COMPENSATION 38
901 CONSIDERATION (CITY'S PROMISE TO PAY) 38
902 PAYMENT PROCEDURE 38
903 SCHEDULE OF VALUES IN LUMP SUM CONTRACTS 39
904 UNIT PRICE CONTRACTS 39
905 PROGRESS PERIOD 39
906 APPLICATIONS FOR PAYMENT 40
907 RELEASES AND CONTRACTORS CERTIFICATIONS OF PAYMENT 41
908 RETAINAGE 41
909 ADDITIONAL WITHHOLDING OF PROGRESS PAYMENTS 42
910 FINAL ESTIMATE AND PAYMENT 43
911 ACCOUNTING OF COSTS AND AUDIT 43

TITLE 10
WAGE 45
1001 PREVAILING WAGE ORDINANCE 45
1002 POSTING OF THE APPLICABLE WAGE RATES 45
1003 RATE AND FREQUENCY OF WAGES PAID 45
1004 REPORTING WAGES PAID 45
1005 FAILURE TO PAY PREVAILING WAGES 46

TITLE 11
CHANGES IN THE WORK, CONTRACT PRICE OR CONTRACT TIME 47
1101 CHANGE ORDER 47
1102 CITY INITIATED CHANGES 47
1103 CONTRACTOR CHANGE REQUEST 48
1104 ADJUSTMENT TO CONTRACT AMOUNT 51
1105 TIME EXTENSIONS 54

TITLE 12
CONTRACTOR CLAIMS FOR ADJUSTMENT AND DISPUTES 56
1201 NOTICE OF INTENT TO CLAIM 56
1202 SUBMITTAL OF CLAIMS 56
1203 WAIVER OF CLAIMS 58

TITLE 13
DISPUTES **59**
1301 DISPUTES 59

TITLE 14
SITE CONDITIONS **60**
1401 DIFFERING SITE CONDITIONS 60
1402 SITE INSPECTIONS AND INVESTIGATIONS 60

TITLE 15
PERFORMANCE AND PAYMENT BONDS **62**
1501 SURETY BONDS 62
1502 PERFORMANCE BOND 62
1503 PAYMENT BOND 62

TITLE 16
INSURANCE AND INDEMNIFICATION **63**
1601 INSURANCE 63
1602 DEFENSE AND INDEMNIFICATION 63

TITLE 17
INSPECTION AND DEFECTS **64**
1701 CONSTRUCTION INSPECTION BY THE CITY 64
1702 AUTHORITY OF INSPECTORS 64
1703 OBSERVABLE DEFECTS 64
1704 DEFECTS - UNCOVERING WORK 64
1705 LATENT DEFECTS 65
1706 REMOVAL OF DEFECTIVE MATERIALS AND WORK 65

TITLE 18
WARRANTIES, GUARANTEES AND CORRECTIVE WORK **66**
1801 CONTRACTOR'S WARRANTIES, GUARANTEES AND CORRECTION OF WORK 66
1802 PERFORMANCE DURING WARRANTY PERIOD 67

TITLE 19
SUBSTANTIAL COMPLETION OF THE WORK **69**
1901 CONTRACTOR'S NOTICE OF SUBSTANTIAL COMPLETION 69
1902 INSPECTION AND PUNCH LIST 69
1903 CERTIFICATE OF SUBSTANTIAL COMPLETION 69
1904 RIGHT OF EARLY OCCUPANCY OR USE 69

TITLE 20
FINAL COMPLETION AND ACCEPTANCE OF THE WORK **71**
2001 CLEAN-UP UPON COMPLETION 71
2002 FINAL COMPLETION AND ACCEPTANCE OF THE WORK 71
2003 FINAL SETTLEMENT 71

TITLE 21
SUSPENSION OF WORK **74**
2101 SUSPENSION OF WORK 74
2102 SUSPENSION OF THE WORK FOR THE CITY'S CONVENIENCE 74
2103 SUSPENSION BECAUSE OF ORDER OF CITY, STATE OR FEDERAL COURT OR AGENCY 75
2104 SUSPENSION RESULTING FROM CONTRACTOR'S FAILURE TO PERFORM 75

TITLE 22
CITY'S RIGHT TO TERMINATE THE CONTRACT 76
2201 TERMINATION OF CONTRACT FOR CAUSE 76
2202 TERMINATION OF CONTRACT
FOR CONVENIENCE OF THE CITY 77

TITLE 23
MISCELLANEOUS PROVISIONS 80
2301 PARTIES TO THE CONTRACT 80
2302 FEDERAL AID PROVISIONS 80
2303 NO WAIVER OF RIGHTS 80
2304 NO THIRD PARTY BENEFICIARY 80
2305 GOVERNING LAW; VENUE 81
2306 ABBREVIATIONS 81
2307 STATUTE OF LIMITATIONS IN C.R.S. § 13-80-102(1)(h) 81

CITY AND COUNTY OF DENVER
DEPARTMENT OF PUBLIC WORKS
ENGINEERING DIVISION

SPECIAL CONTRACT CONDITIONS

SC-1 CONSTRUCTION SPECIFICATIONS

Except as amended herein or in the attached Technical Specifications, all Work performed under the terms of this Contract shall be governed by the applicable provisions of the following latest editions:

City and County of Denver:

Standard Specifications for Construction, GENERAL CONTRACT CONDITIONS, 2011 Edition.

Transportation Standards and Details for the Engineering Division

City and County of Denver Traffic Standard Drawings

Wastewater Management Division
– *Standard Detail Drawings*
– *Public Works Wastewater Capital Projects Management Standard Construction Specifications*

Colorado Department of Transportation:

Standard Specifications for Road and Bridge Construction
(Sections 200 through 700 of the 2011 Edition)

Federal Highway Administration:

Manual on Uniform Traffic Control Devices for Streets & Highways (MUTCD)

Building & Fire Codes:

Building Code of the City and County of Denver
(International Building Code 2015 Series, City and County of Denver Amendments 2016)

National Fire Protection Association Standards
(As referenced in the Building Code of the City and County of Denver)

The aforementioned City and County of Denver documents are available for review at the Capital Projects Management Office, 201 W. Colfax Ave., Dept. 506, (5th floor), Denver, CO 80202. The *Standard Specifications for Construction, GENERAL CONTRACT CONDITIONS* is available at: https://www.denvergov.org/content/denvergov/en/contract-administration/contractor-resources.html

Transportation Standards and Details for the Engineering Division and the Wastewater Management Division – *Standard Detail Drawings*, are available at http://www.denvergov.org.

The "*Colorado Department* of *Transportation Standard Specifications for Road and Bridge Construction*" is available for review on CDOT's website at http://www.coloradodot.info/ and can be purchased from the Colorado Department of Transportation.

The *Manual on Uniform Traffic Control Devices for Streets & Highways* is available for review at the Federal Highway Administration Website at: www.fhwa.dot.gov, The FHWA website also contains purchasing information.

SC-2 DEPUTY MANAGER / CITY ENGINEER

General condition 109 DEPUTY MANAGER is hereby deleted in its entirety and replaced with the following: The "Deputy Manager" means the official who reports directly to the Manager and exercises supervisory responsibility in the City agency defined in Title 2 herein that is responsible for the Project. The Manager hereby designates the City Engineer as the Deputy Manager for purposes of this Contract. The City Engineer shall have responsibility for this Project and shall undertake all duties, responsibilities, rights and authority, including specific actions and decisions, delegated to the Deputy Manager under the various terms and conditions of this Contract.

SC-3 ENGINEERING DIVISION / CITY ENGINEER

The Engineering Division is a unit of the Department of Public Works and is supervised by the City Engineer, who is subordinate to the Manager of Public Works. This Division is responsible for the planning, design, construction, operation and maintenance of all of the City's transportation facilities and the planning, design and construction of all of the City's wastewater facilities, except for the City's Municipal Airport System. All other references to the Transportation Division or the Deputy Manager of Public Works for Transportation are deleted and replaced with references to the Engineering Division and City Engineer, respectively.

SC-4 WASTEWATER MANAGEMENT DIVISION

The Wastewater Management Division is a unit of the Department of Public Works and is supervised by the Deputy Manager of Public Works for Wastewater Management, who is subordinate to the Manager of Public Works. This Division is responsible for the operation and maintenance of the City's wastewater facilities.

SC-5 CITY DELEGATION OF AUTHORITY

With reference to General Contract Condition 109, DEPUTY MANAGER, and General Contract Condition 212, CITY'S CONTRACT ADMINISTRATION LINE OF AUTHORITY, the Manager hereby designates the City Engineer (the "Director") as the City official responsible for those certain actions and decisions designated as the responsibility of the Deputy Manager under the General Conditions and delegates to the Director the authority necessary to undertake those responsibilities under this Contract. The Director shall have supervisory responsibility over the Project Manager. Additionally, Contractor questions concerning the Plans and Technical Specifications shall be directed to:

Denver Department of Public Works

Project Manager	Telephone
Beth Ashby	720-913-1729

SC-6 LIQUIDATED DAMAGES

The Contract Time, as that term is defined under the General Conditions, shall be separately set out in each Work Order. Should the Contractor fail to complete all Work within the Contract Time allocated under that Work Order, the Contractor shall become liable to the City and County of Denver for liquidated damages on that Project, and not as a penalty, at the rate of $500.00 for each Day that the Contractor exceeds the completion date in the executed work order, all in accordance with provisions of General Contract Condition 602, LIQUIDATED DAMAGES; ADMINISTRATIVE COSTS; ACTUAL DAMAGES, unless a greater or lesser amount in provided for in the authorized Work Order.

If the Contractor fails to commence work within ten (10) consecutive calendar days of the date of issuance of a Notice to Proceed for a referenced Work Order, the Contractor shall become liable to the City and County of Denver for liquidated damages, and not as a penalty, at the liquidated damages rate specified in the fully executed Work Order, for each consecutive calendar day after the expiration of the initial ten (10) day period after issuance of a Notice to Proceed that the Contractor fails to commence work on a fully executed Work Order issued by the City, all in accordance with provisions of General Contract Condition 602.

Representative hourly rates for the City administrative costs described in General Contract Condition 602.2 shall be as follows for this Project:

Project Manager	$69 per hour
Project Engineer	$63 per hour
Inspector	$49 per hour
Surveying, if necessary	$100 per hour

SC-7 SUBCONTRACTS

In accordance with General Contract Condition 501, SUBCONTRACTS, no limit shall apply to that percentage of the Work which may be sublet providing that the subcontractors receive prior approval in accordance with General Contract Condition 502, SUBCONTRACTOR ACCEPTANCE.

SC-8 RESERVED

SC-9 PAYMENTS TO CONTRACTORS

The application for payment shall be submitted through Textura® Corporations Construction Management Website. Contractor recognizes and agrees that it shall be required to use the Textura Construction Payment Management System for this Project to request payment from the City and to pay subcontractors. All certified subcontractors or suppliers who are listed for participation towards any assigned program goal must be paid via Textura®. Contractor further agrees that, to the fullest extent possible within Textura, the City shall be entitled to all non-Confidential records, reports, data and other information related to the project that are available to Contractor through Textura, including, but not limited to, information related to Contractor and subcontractor billings. To that end, Contractor agrees it will activate any available settings within Textura necessary to grant the City access to such non-Confidential information related to the contract and the project. Applications for payment shall be based on the Contract Unit Prices or the approved Schedule of Values described in GC 903.1

In accordance with General Contract Condition 902, PAYMENT PROCEDURE, the party(ies) responsible for review of all Pay Applications shall be:

Agency/Firm	Name	Telephone
Public Works	Beth Ashby	720-913-1729

In accordance with General Contract Condition 906, APPLICATIONS FOR PAYMENT, each Application submitted shall include the following:

1. The estimate of Work completed shall be based on the approved schedule of values or unit prices, as applicable, and the percent of the Work complete.
2. Each Application for Payment shall include each and every independent subcontractor's payroll information including pay dates and pay amounts.
3. The Contractor shall also submit to the Auditor and other appropriate officials of the City in a timely fashion, information required by General Contract Condition 1004, REPORTING WAGES PAID.
4. Applications for Payment must be accompanied by completed Partial or Final Claim Release Form, as appropriate, from EACH subcontractor and supplier, **AND** the Contractors' Certification of Payment Form (CCP), unless an exception is approved pursuant to General contract condition 907.

The forms, Final/Partial Release and Certificate of Payment (Subcontractor/Supplier) and the Contractor's Certification of Payment (CCP), both of which must be used are attached below. If subcontractor or supplier payments are disbursed via Textura® CPM, those systems generated Release and CCP forms are acceptable.

DEPARTMENT OF PUBLIC WORKS
Engineering Division

FINAL/PARTIAL RELEASE AND CERTIFICATE OF PAYMENT
(SUBCONTRACTOR/SUPPLIER)

_____
(PROJECT NO. and NAME)

_____
(NAME OF CONTRACTOR)

_____
(NAME OF SUBCONTRACTOR/SUPPLIER)

Check Applicable Box:
[ ] MBE [ ] WBE

Date: _____, 20___.

Subcontract #:_____.

Subcontract Value: $_____.
Last Progress Payment: $_____.
Date: _____.
Total Paid to Date: $_____.
Date of Last Work: _____.

The Undersigned hereby certifies that all costs, charges or expenses incurred by the undersigned or on behalf of the undersigned for any work, labor or services performed and for any materials, supplies or equipment provided on the above referenced Project or used in connection with the above referenced Subcontract (the "Work Effort") have been duly paid in full.

The Undersigned further certifies that each of the undersigned's subcontractors and suppliers that incurred or caused to be incurred, on their behalf, costs, charges or expenses in connection with the undersigned's Work Effort on the above referenced Project have been duly paid in full.

In consideration of $_____ representing the Last Progress Payment referenced above and in further consideration of the Total Paid to Date, also referenced above, and other good and valuable consideration received and accepted by the undersigned this _____ day of _____, 20__, the Undersigned hereby releases and discharges the City and County of Denver (the "City"), the above referenced City Project, the City's premises and property and the above referenced Contractor from all claims, liens, rights, liabilities, demands and obligations, whether known or unknown, of every nature arising out of or in connection with the performance of the work effort.

As additional consideration for the payments referenced above, the undersigned agrees to defend, indemnify and save and hold harmless the City, its officers, employees, agents and assigns and the above-referenced Contractor from and against all costs, losses, damages, causes of action, judgments under the subcontract and expenses arising out of or in connection with any claim or claims against the City or the Contractor which arise out of the Undersigned's performance of the Work Effort and which may be asserted by the Undersigned or any of its suppliers or subcontractors of any tier or any of their representatives, officers, agents, or employees.

It is acknowledged that this release is for the benefit of and may be relied upon by the City and the referenced Contractor.

The foregoing shall not relieve the undersigned of any obligation under the provisions of the Undersigned's subcontract, as the subcontract may have been amended, which by their nature survive completion of the Undersigned's work effort including, without limitation, warranties, guarantees, insurance requirements and indemnities.

STATE OF COLORADO)ss.
CITY OF _____)

Signed and sworn before me this
day of _____, 20___.

_____.
Notary Public/Commissioner of Oaths
My Commission Expires

_____
(Name of Subcontractor)

By:_____

Title: _____

DENVER	City and County of Denver	Office of Economic Development Compliance Unit 201 W. Colfax Ave., Dept. 907 Denver, CO 80202 Phone: 720.913.1999 Fax: 720.913.1803
	Division of Small Business Opportunity	
	Contractor's/Consultant's Certification of Payment (CCP)	

Prime Contractor or Consultant:	Phone:	Project Manager:
Pay Application #:	Pay Period:	Amount Requested: $
Project #:	Project Name:	
Current Completion Date:	Percent Complete:	Prepared By:
(I) - Original Contract Amount: $		(II) - Current Contract Amount: $

		A	B	C	D	E	F	G	H
Prime/Subcontractor/Supplier Name	MWBE/ DBE/ NON	Original Contract Amount	% Bid (A/I)	Current Contract Amount Including Amendments	% Revised (C/I)	Requested Amount of this Pay Application	Amount Paid on the Previous Pay Application # ____	Net Paid To Date	Paid % Achieved (G/I)
Totals									

The undersigned certifies that the information contained in this document is true, accurate and that the payments shown have been made to all subcontractors and suppliers used on this project and listed herein. Please use an additional form, if more space is necessary.

Prepared By (Signature):	Date:

Page of

COMP-FRM-027 rev 022311

DENVER
OFFICE OF ECONOMIC DEVELOPMENT

Instructions for Completing the Contractor/Consultant Certification of Payment Form

Office of Economic Development
Division of Small Business Opportunity
Compliance Unit
201 W. Colfax Ave., Dept. 907
Denver, CO 80202
Phone: 720-913-1999
Fax: 720-913-1603
dsbo@denvergov.org

Note: The attached Contractor/Consultant Certification of Payment form must be completed by the Contractor/ Subconsultant and all subcontractors/subconsultant or suppliers used on the project at any tier and submitted with each pay application. The Contractor/Consultant is responsible for the accuracy of all information provided and is required to have each subcontractor/subconsultant or supplier fill out the appropriate forms. Please be sure to complete all information requested at the top of the form, including the name of the person who prepared this form.

If you reproduce this form, you must continue to list each of the originally listed firms, as well as any additional firms used during the performance period of the contract work or task order.

If you have any questions, please call the Compliance Unit of DSBO at 720.913.1999.

Instructions for Completing the Contractor/Consultant Certification of Payment Form, per Column

Contractor/Subcontractor or Subconsultant/Supplier Name: In the space provided, list all subcontractors/ subconsultants and suppliers used on the project. For all M/W/S/E/DBEs use the exact name listed in the DSBO Directory.

M/W/S/E/DBE/NON: For each name listed, indicate whether the entity is a certified M/W/S/E/DBE.

Column A: Provide the contract amount, as listed at bid time, for the Contractor/Consultant and each subcontractor/subconsultant or supplier.

Column B: Provide the percentage portion of each listed subcontractor/subconsultant or supplier contract amount (Column A) compared to the total original contract amount in (I).

Column C: Provide the original contract amount (Column A) for each subcontractor/subconsultant or supplier plus any awarded alternate and/or change order amounts applicable. If an alternate/change order does not apply to the listed firm, re-enter the original contract amount (Column A).

Column D: Provide the percent portion of each listed subcontractor/subconsultant or supplier contract amount (Column C) compare to the current total contract amount in (II).

Column E: Provide the amount requested for work performed or materials supplied by each listed subcontractor/subconsultant or supplier for this pay application. The sum of the items in this column should equal the estimated amount requested for this pay application.

Column F: Provide the amount paid to each subcontractor/subconsultant or supplier on the previous pay application. Enter the previous pay application number in the column heading. The sum of the items listed in this column should equal the warrant amount paid to the Contractor/Consultant on the previous pay application. The amounts paid to the subcontractor/subcontractor or suppliers should be the actual amount of each check issued.

Column G: Provide the net paid to date for the Contractor/Subconsultant and each listed subcontractor/subconsultant or supplier.

Column H: Provide the percent portion of the net paid to date (Column G) for the Contractor/Subconsultant and each listed subcontractor/subconsultant or supplier of the current total contract amount in (II).

COMP-REF-031

Rev 03.18.15

SC-10 CONTRACT FORMS

In accordance with the terms and conditions of the Contract Documents, the City requires the use of certain form documents in complying with or satisfying various obligations, notifications and conditions in contracting with the City or performing Work hereunder. These form documents are referenced by title throughout the Contract Documents for mandatory use as directed. The following are the forms that shall be detached and utilized in accordance with the Contract Documents:

1. Performance and Payment Bond
2. Performance and Payment Bond Surety Authorization Letter

The following are forms that will be issued by the City during construction:

1. Notice to Apparent Low Bidder (Sample)
2. Notice To Proceed (Sample)
3. Certificate of Contract Release (Sample)

SC-11 CONSTRUCTION INSPECTION BY THE CITY

General Condition 1701, CONSTRUCTION INSPECTION BY THE CITY, is modified as follows:

1701 Persons who are employees of the City or who are under contract to the City or the City as lessee will be assigned to inspect and test the Work. These persons may perform any tests and observe the Work to determine whether or not designs, materials used, manufacturing and construction processes and methods applied, and equipment installed satisfy the requirements of the drawings and specifications, accepted Shop Drawings, Product Data and Samples, and the General Contractor's warranties and guarantees. The General Contractor shall permit these inspectors unlimited access to the Work and provide means of safe access to the Work, which cost shall be included as a Cost of the Work without any increase to the Guaranteed Maximum Price. In addition, General Contractor shall provide whatever access and means of access are needed to off-site facilities used to store or manufacture materials and equipment to be incorporated into the Work and shall respond to any other reasonable request to further the inspector's ability to observe or complete any tests. Such inspections shall not relieve the General Contractor of any of its quality control responsibilities or any other obligations under the Contract. All inspections and all tests conducted by the City are for the convenience and benefit of the City. These inspections and tests do not constitute acceptance of the materials or Work tested or inspected, and the City may reject or accept any Work or materials at any time prior to the inspections pursuant to G.C. 2002, whether or not previous inspections or tests were conducted by the inspector or a City representative.

.2 Building Inspection will perform building code compliance inspections for structures designed for human occupancy. It is the General Contractor's responsibility to schedule and obtain these inspections. If a code compliance inspection results in identification of a condition which will be at variance to the Contract Documents, the General Contractor shall immediately notify the Project Manager and confirm such notification with formal correspondence no later than forty-eight (48) hours after the occurrence.

.3 When any unit of government or political subdivision, utility or Railroad Corporation is to pay a portion of the cost of the Work, its respective representatives shall have the right to inspect the Work. This inspection shall not make any unit of government or political subdivision, utility or Railroad Corporation a party to the Contract, and shall not interfere with the rights of either party.

SC-12 DISPOSAL OF NON-HAZARDOUS WASTE AT DADS

In accordance with the Landfill Agreement made between the City and Waste Management of Colorado, Inc., bidders will be required to haul dedicated loads (non-hazardous entire loads of waste) to the Denver-Arapahoe Disposal Site ("DADS") for disposal. DADS is located at Highway 30 and Hampden Avenue in Arapahoe County, Colorado. The City will pay all fees associated with such disposal but the bidder shall be responsible for the costs of transporting the loads. Non-hazardous waste is defined as those substances and materials not defined or classified as hazardous by the Colorado Hazardous Waste Commission pursuant to C.R.S. §25-15-101(6), as amended from time to time, and includes construction debris, soil and asbestos. Bidders shall not use Gun Club Road between I-70 and Mississippi Avenue as a means of access to DADS.

SC-13 PROHIBITION ON USE OF CCA-TREATED WOOD PRODUCTS

The use of any wood products pressure-treated with chromated copper arsenate (CCA) is prohibited. Examples of CCA-treated wood products include wood used in play structures, decks, picnic tables, landscaping timbers, fencing, patios, walkways and boardwalks.

SC-14 WAIVER OF: PART 8 OF ARTICLE 20 OF TITLE 13, COLORADO REVISED STATUTES

The Contractor specifically waives all provisions of Part 8 of Article 20 of Title 13, Colorado Revised Statutes regarding defects in the Work under this Construction Contract.

SC-15 ATTORNEY'S FEES

Colorado Revised Statute 38-26-107 requires that in the event any person or company files a verified statement of amounts due and unpaid in connection with a claim for labor and materials supplied on this project, the City shall withhold from payments to the Contractor sufficient funds to insure the payment of any such claims. Should the City and County of Denver be made a party to any lawsuit to enforce such unpaid claims or any lawsuit arising out of or relating to such withheld funds, the Contractor agrees to pay to the City its costs and a reasonable attorney's fee which cost shall be included as a Cost of the Work.

Because the City Attorney does not bill City staff for legal services on an hourly basis, the Contractor agrees a reasonable fee shall be computed at the rate of one hundred dollars per hour of City Attorney time.

SC-16 INSURANCE

General Condition 1601 is hereby deleted in its entirety and replaced with the following:

(1) **General Conditions:** Contractor agrees to secure, at or before the time of execution of this Agreement, the following insurance covering all operations, goods or services provided pursuant to this Agreement. Contractor shall keep the required insurance coverage in force at all times during the term of the Agreement, or any extension thereof, during any warranty period, and for eight (8) years after termination of the Agreement. The required insurance shall be underwritten by an insurer licensed or authorized to do business in Colorado and rated by A.M. Best Company as "A-"VIII or better. Each policy shall contain a valid provision or endorsement requiring notification to the City in the event any of the required policies be canceled or non-renewed before the expiration date thereof. Such written notice shall be sent to the parties identified in the Notices section of this Agreement. Such notice shall reference the City contract number listed on the signature page of this Agreement. Said notice shall be sent thirty (30) days prior to such cancellation or non-renewal unless due to non-payment of premiums for which notice shall be sent ten (10) days prior. If such written notice is unavailable from the insurer, contractor shall provide written notice of cancellation, non-renewal and any reduction in coverage to the parties identified in the Notices section by certified mail, return receipt requested within three (3) business days of such notice by its insurer(s) and referencing the City's contract number. If any policy is in excess of a deductible or self-insured retention, the City must be notified by the Contractor. Contractor shall be responsible for the payment of any deductible or self-insured retention. The insurance coverages specified in this Agreement are the minimum requirements, and these requirements do not lessen or limit the liability of the Contractor. The Contractor shall maintain, at its own expense, any additional kinds or amounts of insurance that it may deem necessary to cover its obligations and liabilities under this Agreement.

(2) **Proof of Insurance:** Contractor shall provide a copy of this Agreement to its insurance agent or broker. Contractor may not commence services or work relating to the Agreement prior to placement of coverage. Contractor certifies that the certificate of insurance attached as part of the Contract Documents, preferably an ACORD certificate, complies with all insurance requirements of this Agreement. The City requests that the City's contract number be referenced on the Certificate. The City's acceptance of a certificate of insurance or other proof of insurance that does not comply with all insurance requirements set forth in this Agreement shall not act as a waiver of Contractor's breach of this Agreement or of any of the City's rights or remedies under this Agreement. The City's Risk Management Office may require additional proof of insurance, including but not limited to policies and endorsements.

(3) **Additional Insureds:** For Commercial General Liability and Auto Liability, Contractor and subcontractor's insurer(s) shall name the City and County of Denver, its elected and appointed officials, employees and volunteers as additional insured.

(4) **Waiver of Subrogation:** For all coverages, Contractor's insurer shall waive subrogation rights against the City.

(5) **Subcontractors and Subconsultants:** All subcontractors and subconsultants (including independent contractors, suppliers or other entities providing goods or services required by this Agreement) shall be subject to all of the requirements herein and shall procure and maintain the same coverages required of the Contractor. Contractor shall include all such subcontractors as additional insured under its policies (with the exception of Workers' Compensation) or shall ensure that all such subcontractors and subconsultants maintain the required coverages. Contractor agrees to provide proof of insurance for all such subcontractors and subconsultants upon request by the City.

(6) **Workers' Compensation/Employer's Liability Insurance:** Contractor shall maintain the coverage as required by statute for each work location and shall maintain Employer's Liability insurance with limits of $100,000 per occurrence for each bodily injury claim, $100,000 per occurrence for each bodily injury caused by disease claim, and $500,000 aggregate for all bodily injuries caused by disease claims. Contractor expressly represents to the City, as a material representation upon which the City is relying in entering into this Agreement,

that none of the Contractor's officers or employees who may be eligible under any statute or law to reject Workers' Compensation Insurance shall effect such rejection during any part of the term of this Agreement, and that any such rejections previously effected, have been revoked as of the date Contractor executes this Agreement.

(7) **Commercial General Liability:** Contractor shall maintain a Commercial General Liability insurance policy with limits of $1,000,000 for each occurrence, $1,000,000 for each personal and advertising injury claim, $2,000,000 products and completed operations aggregate, and $2,000,000 policy aggregate.

(8) **Business Automobile Liability:** Contractor shall maintain Business Automobile Liability with limits of $1,000,000 combined single limit applicable to all owned, hired and non-owned vehicles used in performing services under this Agreement

(9) **Additional Provisions:**

(a) For Commercial General Liability, the policies must provide the following:

(i) That this Agreement is an Insured Contract under the policy;
(ii) Defense costs in excess of policy limits;
(iii) A severability of interests or separation of insureds provision (no insured vs. insured exclusion); and
(iv) A provision that coverage is primary and non-contributory with other coverage or self-insurance maintained by the City.

(b) For claims-made coverage:
(i) The retroactive date must be on or before the contract date or the first date when any goods or services were provided to the City, whichever is earlier

(c) Contractor shall advise the City in the event any general aggregate or other aggregate limits are reduced below the required per occurrence limits. At their own expense, and where such general aggregate or other aggregate limits have been reduced below the required per occurrence limit, the Contractor will procure such per occurrence limits and furnish a new certificate of insurance showing such coverage is in force.

SC-17 GREENPRINT DENVER

In accordance with the City and County of Denver Executive Order 123: Greenprint Denver Office and Sustainability Policy, as amended, Contractor shall adhere to sections of Executive Order 123 pertinent to the construction of the built environment. This includes but is not limited to: all construction and renovation of buildings shall follow instructions and memorandum for high performance buildings; horizontal projects shall include the use of fly ash concrete and recycled aggregate where possible; and, all projects shall recycle construction and demolition waste, and install materials that contain recycled content whenever possible using the U.S. Green Building Council Leadership in Energy and Environmental Design (LEED) as guidance. Non-hazardous solid waste that is eligible for reuse or recycling is not subject to the DADS disposal requirement defined in SC-12.

A completed "Greenprint Denver Closeout Form for Construction Projects" shall be delivered to the Project Manager as a submittal requirement of Final Acceptance.

This form can be found at:
http://www.denvergov.org/constructioncontracts/Home/ContractorResources/tabid/443154/Default.aspx

ON-CALL SPECIFIC SPECIAL CONDITIONS:

SC-18 PERFORMANCE OF WORK, AS DIRECTED BY THE CITY

Titles 1 and 3 of the General Contract Conditions shall generally apply to this Contract as supplemented by the following:

As described elsewhere in the Contract documents, this Contract contemplates performance of services Work by the Contractor on a variety of, as yet to be identified, City construction and demolition Projects on an "as needed" or "on call" bases. Under the terms of this Contract, the City, in its sole discretion, will determine the extent and nature and also specific terms and conditions of each Work scope it requires the Contractor to. Nothing contained herein, however, shall be construed by the Contractor as promise or guarantee of any minimum amount of Work or compensation hereunder.

In the event the City elects to direct the Contractor to perform hereunder, the process by which both a specific Work scope and specific performance terms or conditions will be established prior to commencement of such work shall be as follows:

1. The City will identify a Work scope for the Contractor to perform and will issue to the Contractor a Proposal Pricing Request (in the format provided herein) containing, at a minimum, a detailed Work description, drawings, plans, specifications, the specific terms and conditions under which such Work must be performed and other pertinent materials.

2. In accordance with the terms and conditions of this Contract, the Contractor will review each Request and provide a price (in the Proposal Request Pricing Worksheet format provided herein) and a project schedule responsive to each Proposal Pricing Request. In preparing its price, the Contractor shall include all bid unit prices for any Work that corresponds with any unit price description. Work elements that are not covered by any unit prices shall be priced using the format and cost categories for labor, material and equipment specified herein.

3. Upon receipt of the completed and fully executed Proposal Request Pricing Worksheet from the Contractor, negotiation of non-unit price items and agreement on the total price, schedule and any other specific requirements for the requested scope of Work, a Work Order (in the format provided for herein) for the Work will be issued by the City authorizing the Work under the terms and conditions set forth Work Order and attachments and encumbering funds for the performance of such Work.

4. Upon receipt of the fully executed Work Order and a Work Order Notice to Proceed (in the format provided for herein), the Contractor shall have ten (10) consecutive calendar days to commence the Work.

5. During the course of performance of the Work authorized by each Work Order, the Contractor shall submit regular pay applications, in accordance with provisions of these Special Contract Conditions. The City shall issue payment for all satisfactorily completed Work authorized by Work Order, in accordance with the terms and conditions of the Contract Documents.

6. If additions, deletions or other modifications to the authorized Work scope or other terms or conditions are required or desired in the sole discretion of the City under a particular Work Order, a Work Order Change will be issued based on pricing prepared in the same manner as a Proposal Pricing Request and under the terms and conditions for issuance of a Change Order under the General Contract Conditions. The Work Order Change will identify any increase or decrease in the cost, change in the period of performance and any other modifications to the performance requirements for that particular Work Order.

7. Upon satisfactory completion, notice of Substantial Completion and Final Completion of the Work authorized and performed under each Work Order, Work Order Close-Out will occur, a Final Receipt for that Work Order will be issued, and final payment for the Work Order will be made.

8. Under this Contract, more than one Work Order may be issued and performed by the Contractor at the same time.

Given that under this Contract, the Contractor is committed to make available to the City and, as from time to time directed by the City under the process described, furnish all labor, tools, supplies, equipment, materials and everything necessary for and required to do, perform and complete all of the Work described in any Work Order issued in accordance with the terms and conditions set forth herein, certain provisions, terms and conditions included in the General Contract Conditions either will not apply or will apply on a Work Order by Work Order basis rather than an overall Contract basis.

As such, the term Work, as used in the Contract Documents shall mean the Contractor's equipment and physical plant, labor, management, administration, supervision, materials and supplies, and all other things needed to assemble, manufacture, complete or perform the various components into finished improvements pursuant to any Work Order issued pursuant to the Contract Documents. Unless otherwise specified or clearly inapplicable from the context of a given provision, each and every General Contract Condition contained or referenced in the Contract Documents shall apply to and control all Work performed hereunder.

SC-19 PERFORMANCE AND PAYMENT BOND

Title 15 of the General Contract Conditions shall generally apply to this Contract as supplemented by the following:

A Performance and Payment Bond, in the form included in these Contract Documents, shall be furnished covering all Work performed hereunder. An initial bond in the amount of **Four Hundred Fifty Thousand Dollars and No Cents ($450,000.00)** shall be provided at the time of Contract execution. In the event the dollar amount of Work authorized under all work orders exceeds this amount the Contractor shall provide properly executed bond Change Riders, also in the form included in these Contract Documents immediately after this provision, totaling the amount of all authorized work orders.

SC-20 PROPOSAL REQUEST PRICING

Title 9 of the General Contract Conditions shall generally apply to this Contract as supplemented by the following:

A. In order to initiate Work hereunder, the City must prepare and issue a Proposal Pricing Request, in the form included in these Contract Documents. For each Proposal Pricing Request submitted to the Contractor for pricing, the Contractor shall price the request and submit a completed Proposal Request Pricing Worksheet, in the form included in these Contract Documents immediately after this provision and complying with the terms and conditions set forth on the form, to the Project Manager, with all supporting materials, within fourteen (14) consecutive calendar days of the date of issuance of such Proposal Pricing Request. The Contractor shall price each request and prepare the appropriate documentation in accordance with the requirements stated herein.

B. **Unit Prices** – In pricing a Request, the bid unit prices shall be fully compensation for the Work identified in the unit price description and corresponding specification section, as well as, all costs associated with field and office supervision required, and general and home office markups, overhead and any other direct or indirect costs of the Work not specifically excluded. The only costs that may be excluded form a bid unit prices must be applied to all Work that corresponds to the unit price description in the Bid Form;

C. **Work Not Covered by Bid Unit Prices** – In pricing the remaining Work in a Request, the Contractor shall provide itemized and sufficient supporting data, including calculations, measurements, cost records, production rates, equipment types and capacity, labor costs by craft and other information which the City may reasonably require in order for the City to evaluate the Contractor's pricing for Work not covered by unit prices for any Proposal Request and Work Order Change pricing.

Direct labor costs shall include only the cost associated with the workers who actually perform the Work (including fringe benefits and the Contractor's actual cost for Worker's Compensation, Social Security and Payroll taxes). The costs of supervision, management and field or office overhead costs shall not be included or calculated as direct labor cost. For shop or plant components of the Work, the direct labor cost shall include only those workers who work directly on the item being manufactured or the actual operators of the equipment being used to handle the items being manufactured.

Material costs shall include the direct costs of materials, supplies and equipment incorporated in or consumed by the Work. The costs shall be based on buying the material, supplies and equipment other than small tools, or equipment rental rates without markup or operator, as listed in the appropriate rental rate book currently in use by the Colorado Department of Transportation.

Equipment costs shall be the actual cost to the Contractor of owned and/or rented equipment other than small tools, or equipment rental rates without markup or operator, as listed in the appropriate rental rate book currently in use by the Colorado Department of Transportation.

D. **Markup for Overhead and Profit** – The Contractor, subcontractor or sub-subcontractor who actually performs the Work shall be entitled to a markup of 15% on the actual costs identified in item B, only, above. Bonds, insurance and sales tax shall be added **after** markup.

A supervising subcontractor, if any, shall not be entitled to a markup on the actual price charged to the subcontractor by the sub-subcontractor.

The Contractor shall be entitled to a 7% markup on the actual price for the subcontractor's work.

These percentage markups shall be considered to include field and office supervisors and assistants including all clerical and general office help; review and coordination; estimating; expediting; watchmen; small tools; incidental job burdens including office equipment and supplies, temporary toilets, telephone, fax and conformance to OSHA requirements; and general home office expenses. These percentage mark ups shall be applied one time only for each Proposal Request and shall not pyramid in any way.

E. Bonds, Insurance, Permits and Taxes shall be reimbursed at the actual cost associated with all required bond riders, insurance, permits, licenses, and sales, use or other taxes related to the Work.

F. If it is later determined that the pricing was not correct due to inaccurate or incomplete pricing data by the Contractor or any subcontractor or supplier, the price shall be reduced accordingly and the Work Order cost modified by a Work Order Change.

SC-21 WORK ORDERS

With respect to Each Work Order Issued hereunder, the General Contract Conditions shall generally apply to this Contract as supplemented by the following:

Upon review of any Proposal Request Pricing Worksheet completed by the Contractor pursuant to a City Proposal Request, the City may, at its sole discretion, reject the pricing submittal or may direct that the Work described in the Proposal Request and priced by the Contractor be completed by issuance of a Work Order, in the form included in these Contract Documents to the Contractor. The City reserves the right to issue such a Work Order, at the price and under the terms of the Contractor's pricing submittal, at any time before the expiration of 120 consecutive calendar days from the date the pricing submittal was received by the City. If no Work Order is issued and the pricing submittal is not rejected within this period, the Contractor's pricing submittal shall be deemed rejected by the City.

SC-22 WORK ORDER NOTICE TO PROCEED

GC-302 of the General Contract Conditions shall generally apply to this Contract as supplemented by the following:

A Work Order Notice to Proceed, in the form included in these Contract Documents for that particular Work Order, will be issued by the Director at such time as the Work Order is executed by the Contractor and all designated City officials, and the Contractor has submitted a Payment and Performance bond or Bond Change Rider for the Work described in the Proposal Request, in accordance with SC-20, PERFORMANCE AND PAYMENT BOND, and which are satisfactory to the City Attorney. Until a Work Order Notice to Proceed is issued, the City shall have no obligation to compensate the Contractor for Work performed.

The Contractor shall commence the Work in accordance with that particular Work Order within ten (10) consecutive calendar days of the date of the Work Order Notice to Proceed, and the Contractor shall prosecute the Work to be accomplished under the Work Order at such time and place as the Work Order directs and shall fully complete in every detail all specified Work in accordance with the terms and conditions of the Work Order and the provisions of these General Contract Conditions and Special Contract Conditions, within the period of performance specified in the Work Order, plus such extensions of time as may be granted by the Manager in accordance with the provisions of this Contract.

SC-23 PROGRESS PAYMENTS FOR WORK ORDERS

Title 9 of the General Contract Conditions shall apply to this Contract as supplemented by the following:

With respect to any Work Order issued hereunder, the terms and conditions of Title 9 shall apply to each Work Order as if such Work Order were a separate Contract. In addition, progress payments for the performance of any Work shall be based on completed Work estimates supported wither by lien releases or properly completed Contractor's Certifications of Payment, in the format included in these Contract Documents, and subject to the following requirements:

1. Each estimate of Work completed for each Work Order shall contain a list of subcontractor and material invoices for all subcontractors and suppliers and shall be based on the approved schedule of values certified by the Project Engineer/Manager or the Consulting Architect or Engineer, as appropriate. Each submittal estimate must specify the percent of the Work complete.

2. Each estimate of Work completed for each Work Order shall specifically identify those M/WBE Subcontractors or Suppliers that the Contractor is utilizing on the Project pursuant to the requirements of Article III, Division 1 of Chapter 28, of the D.R.M.C.

3. Each estimate of Work for each Work Order completed shall be accompanied by either duplicate sets of verified Contractor's Certifications of Payment, in the form included in these Contract Documents, or by verified Partial Release of Contractor forms from each subcontractor and supplier, also in the form included in these Contract Documents. Each estimate of Work for each Work Order completed shall also be accompanied by:

    a. A written schedule of values, which set out the quantities and costs for the Project; and

    b. The Project Engineer/Manager's, or as applicable, Consulting Architect/ Engineer's estimated statement of the percentage of Work completed for each line item of cost for which the Contractor seeks payment. The Contractor shall also submit to the Auditor and other appropriate officials of the City, in a timely fashion, all information required by the General Contract Conditions.

4. Each estimate of the percentage of Work completed shall constitute a representation by the Contractor to the City that the Work has progressed to the point indicated; that the quality of the Work covered by the estimate is in accordance with the Contract Documents; that each obligation covered by the estimate (except as otherwise noted) and the payments required will be used to discharge such obligation unless previously discharged; and that the Contractor is entitled to payment in the amount requested. The Project Engineer/Manager or the Consulting Architect/Engineer, as appropriate, with the assistance of input from the Project Manager, in the event that such has been retained, will also verify and certify the estimate prior to acceptance by the City.

5. By submitting an application for payment, the Contractor further warrants that:

a. Title to Work covered by each submitted estimate of Work completed will pass to the City by incorporation into the completed Work;

b. Work covered by previous estimates of Work completed is free and clear of liens, claims, security interests or encumbrances, hereinafter referred to as "liens, " except for any interest created by retainage; and

c. No Work covered by any estimate of Work completed will have been acquired by the Contractor, or any other person or entity performing Work at the Work site or furnishing materials or equipment for the Project and that no Work covered by any estimate is subject to an agreement under which an interest therein or an encumbrance thereon is retained by the seller or otherwise imposed by the contractor or such other person or entity.

6. Approval of an estimate of Work completed or actual payment by the City shall not foreclose the right of the City to examine the books and records of the Contractor to determine the correctness and accuracy of any estimate item.

7. The terms and conditions regarding retainage contained in General Contract Condition 908 shall apply separately to payments made under each and every Work Order issued hereunder. Moreover, applications for a reduction in retainage must be accompanied by Partial Release of Liens form from each subcontractor or suppler, in the form included in these Contract Documents immediately after this provision via the Textura® system.

8. Pursuant to General Contract Condition 907, the final estimate for payment shall also be accompanied by Final Release of Liens form from each subcontractor and supplier, in the form included in these Contract Documents.

9. Receipt of Contractor's Certification of Payment or Partial Release of Liens form by the City hereunder shall not act to impair the City's obligations imposed by C.R.S. 38-26-107 or successor statue.

10. If the Contractor disputes a subcontractor or suppler entitled to a portion of the previous month's payment, the Contractor need not submit a Contractor's Certificate of Payment or Partial Release of Liens form from such subcontractor and/or suppler. However, in lieu of such submittal, the Contractor shall submit to the City a copy of a written communication form the Contractor to such subcontractor and/or supplier explaining the Contractor's determination not to render payment to such subcontractor or supplier, together with proof of service of such written communication upon such subcontractor or supplier.

SC-24 WORK ORDER CHANGES

Title 11 of the General Contract Conditions shall apply to this Contract, on a Work Order by Work Order basis, as supplemented by the following:

In accordance with all terms and conditions provided for standard change orders under Title 11 of the General Contract Conditions, the City may issue Work Order Changes providing for deletions, additions and modifications to the Work under a duly issued Work Order. Work Order Changes must be issued on the Work Order Change Form, in the form included in these Contract Documents.

SC-25 WORK ORDER CLOSE-OUT

Titles 19 and 20 of the General Contract Conditions shall apply to this Contract, on a Work Order by Work Order basis, as supplemented by the following:

Upon Substantial Completion of all Work performed under each Work Order in accordance with the Contract Documents, final close-out for that Work Order shall be made in accordance with the terms and conditions of Title 20 of the General Contract Conditions.

SC-26 CONTRACT CLOSE-OUT

Upon written notification from the City to the Contractor that no further Work Orders will be issued hereunder and the completion of final close-out for any previously issued Work Orders in accordance with SC-19 WORK ORDER CLOSE-OUT, the Contract shall proceed to final close-out. The Contractor agrees to comply with all applicable Contract close-out procedures and requirements set forth in Section 01010 of the Contract Specifications. In addition, the Contractor agrees to execute and deliver to the City a Final Receipt in the forms previously referenced and to provide to the City a consent of surety covering all Work performed hereunder. Until such time as all Contract close-out procedures are completed and each contract close-out requirement is satisfied, the City shall retain from amounts due the Contractor, in addition to any other withholdings provided for hereunder, a sum not greater than one percent (1%) of the maximum contract amount specified herein.

SC-27 OTHER ON-CALL CONSTRUCTION SERVICES CONTRACTS

In the event the City elects to bid other Construction Services Contracts during the performance period specified herein, the parties specifically agree that the Contractor will not submit a bid or enter into a contract for such Contracts until such time as the City issues to the Contractor written notification that not further Work Orders will be issued hereunder, as provided for in SC-19 CONTRACT CLOSE-OUT.

SC-28 ON-CALL SPECIFIC CONTRACT FORMS

The following listed and attached "Contract Forms" shall be detached and utilized in accordance with the Contract Documents. *(forms located at the end of this section, behind title sheet labeled "SC-28 On-Call Specific Contract Forms")*

1. Change Rider ..... 1 Page
2. Proposal Request ..... 1 Page
3. Proposal Request Pricing Worksheet ..... 1 Page
4. Unit Price Sheets for Proposal Request ..... 1 Page
5. Contractor Worksheet for Proposal Requests ..... 1 Page
6. Work Order ..... 1 Pages
7. Work Order Change ..... 1 Pages

CITY AND COUNTY OF DENVER
DEPARTMENT OF PUBLIC WORKS

Bond No. S464211

PERFORMANCE AND PAYMENT BOND

KNOW ALL MEN BY THESE PRESENTS, that we, the undersigned **GLOBAL UNDERGROUND CORPORATION, 641 Winters Dr., Colorado Springs, CO 80907**, a corporation organized and existing under and by virtue of the laws of the State of **Colorado**, hereafter referred to as the "Contractor", and **Employers Mutual Casualty Company**, a corporation organized and existing under and by virtue of the laws of the State of **Iowa** and authorized to transact business in the State of Colorado, as Surety, are held and firmly bound unto the CITY AND COUNTY OF DENVER, a municipal corporation of the State of Colorado, hereinafter referred to as the "City", in the penal sum of **Four Hundred Fifty Thousand Dollars and Zero Cents**
($450,00.00), lawful money of the United States of America, for the payment of which sum, well and truly to be made, we bind ourselves and our heirs, executors, administrators, successors and assigns, jointly and severally, firmly by these presents;

THE CONDITION OF THE FOREGOING OBLIGATION IS SUCH THAT:

WHEREAS, the above bounden Contractor has entered into a written contract with the aforesaid City for furnishing all labor and tools, supplies, equipment, superintendence, materials and everything necessary for and required to do, perform and complete the construction of **CONTRACT NO. 201845992; 2018 DIRECTIONAL BORING MASTER ON-CALL,** Denver, Colorado, and has bound itself to complete the project within the time or times specified or pay liquidated damages, all as designated, defined and described in the said Contract and Conditions thereof, and in accordance with the Plans and Technical Specifications therefore, a copy of said Contract being made a part hereof;

NOW, THEREFORE, if the said Contractor shall and will, in all particulars well and truly and faithfully observe, perform and abide by each and every Covenant, Condition and part of said Contract, and the Conditions, Technical Specifications, Plans, and other Contract Documents thereto attached, or by reference made a part thereof and any alterations in and additions thereto, according to the true intent and meaning in such case, then this obligation shall be and become null and void; otherwise, it shall remain in full force and effect;

PROVIDED FURTHER, that if the said Contractor shall satisfy all claims and demands incurred by the Contractor in the performance of said Contract, and shall fully indemnify and save harmless the City from all damages, claims, demands, expense and charge of every kind (including claims of patent infringement) arising from any act, omission, or neglect of said Contractor, its agents, or employees with relation to said work; and shall fully reimburse and repay to the City all costs, damages, and expenses which it may incur in making good any default based upon the failure of the Contractor to fulfill its obligation to furnish maintenance, repairs or replacements for the full guarantee period provided in the Contract Documents, then this obligation shall be null and void; otherwise it shall remain in full force and effect;

PROVIDED FURTHER, that if said Contractor shall at all times promptly make payments of all amounts lawfully due to all persons supplying or furnishing it or its subcontractors with labor and materials, rental machinery, tools or equipment used or performed in the prosecution of work provided for in the above Contract and that if the Contractor will indemnify and save harmless the City for the extent of any and all payments in connection with the carrying out of such Contract, then this obligation shall be null and void; otherwise it shall remain in full force and effect;

PROVIDED FURTHER, that if the said Contractor fails to duly pay for any labor, materials, team hire, sustenance, provisions, provender, gasoline, lubricating oils, fuel oils, grease, coal, or any other supplies or materials used or consumed by said Contractor or its subcontractors in performance of the work contracted to be done, or fails to pay any person who supplies rental machinery, tools or equipment, all amounts due as the result of the use of such machinery, tools or equipment in the prosecution of the work, the Surety will pay the same in any amount not exceeding the amount of this obligation, together with interest as provided by law;

PROVIDED FURTHER, that the said Surety, for value received, hereby stipulates and agrees that no change, extension of time, alteration or addition to the terms of the Contract, or to contracts with others in connection with this project, or the work to be performed thereunder, or the Technical Specifications and Plans accompanying the same, shall in any way affect its obligation on this bond and it does hereby waive notice of any change, extension of time, alteration or addition to the terms of the Contract, or contracts, or to the work, or to the Technical Specifications and Plans.

IN WITNESS WHEREOF, said Contractor and said Surety have executed these presents as of this 21st day of November, 2018

Attest:

Secretary

Global Underground Corp.

Contractor

By:

President

Employers Mutual Casualty Company

Surety

By: Ruth Anne Lindsay

Attorney-In-Fact Ruth Anne Lindsay

(Accompany this bond with Attorney-in-Fact's authority from the Surety to execute bond, certified to include the date of the bond).

APPROVED AS TO FORM:
Attorney for the City and County of Denver

By:

Assistant City Attorney

APPROVED FOR THE CITY AND COUNTY OF DENVER

By:

MAYOR

By:

MANAGER OF PUBLIC WORKS

P.O. Box 712 • Des Moines, Iowa 50306-0712

EMC INSURANCE

POWER OF ATTORNEY APPOINTING INDIVIDUAL ATTORNEY-IN-FACT

KNOW ALL MEN BY THESE PRESENTS, that:

1. **Employers Mutual Casualty Company, an Iowa Corporation**
2. **EMCASCO Insurance Company, an Iowa Corporation**
3. **Union Insurance Company of Providence, an Iowa Corporation**
4. **Illinois EMCASCO Insurance Company, an Iowa Corporation**
5. **Dakota Fire Insurance Company, a North Dakota Corporation**
6. **EMC Property & Casualty Company, an Iowa Corporation**
7. **Hamilton Mutual Insurance Company, an Iowa Corporation**

hereinafter referred to severally as "Company" and collectively as "Companies", each does, by these presents, make, constitute and appoint:

TIMOTHY J. BLANCHARD, JONATHAN B. LAND, ROBERT CHARLES TORREZ, VICKIE GOLOBIC, TERRI L. REESE, CHRISTINA L. TOWNSEND, JENNIFER J. WALKER, JOHNA KATHRYN MOORS, BARBARA J. ARNOLD, ASHLEY K. ANDERSON, MARY ANN EURICH, DONNA L. ADAMS, RUTH ANNE LINDSAY

ts true and lawful attorney-in-fact, with full power and authority conferred to sign, seal, and execute the Surety Bond:

ANY AND ALL BONDS

and to bind each Company thereby as fully and to the same extent as if such instruments were signed by the duly authorized officers of each such Company, and all of the acts of said attorney pursuant to the authority hereby given are hereby ratified and confirmed.

The authority hereby granted shall expire April 1, 2021, unless sooner revoked.

AUTHORITY FOR POWER OF ATTORNEY

This Power-of-Attorney is made and executed pursuant to and by the authority of the following resolution of the Boards of Directors of each of the Companies at the first regularly scheduled meeting of each company duly called and held in 1999:

RESOLVED: The President and Chief Executive Officer, any Vice President, the Treasurer and the Secretary of Employers Mutual Casualty Company shall have power and authority to (1) appoint attorneys-in-fact and authorize them to execute on behalf of each Company and attach the seal of the Company thereto, bonds and undertakings, recognizances, contracts of indemnity and other writings obligatory in the nature thereof; and (2) to remove any such attorney-in-fact at any time and revoke the power and authority given to him or her. Attorneys-in-fact shall have power and authority, subject to the terms and limitations of the power-of-attorney issued to them, to execute and deliver on behalf of the Company, and to attach the seal of the Company thereto, bonds and undertakings, recognizances, contracts of indemnity and other writings obligatory in the nature thereof, and any such instrument executed by any such attorney-in-fact shall be fully and in all respects binding upon the Company. Certification as to the validity of any power-of-attorney authorized herein made by an officer of Employers Mutual Casualty Company shall be fully and in all respects binding upon this Company. The facsimile or mechanically reproduced signature of such officer, whether made heretofore or hereafter, wherever appearing upon a certified copy of any power-of-attorney of the Company, shall be valid and binding upon the Company with the same force and effect as though manually affixed.

IN WITNESS THEREOF, the Companies have caused these presents to be signed for each by their officers as shown, and the Corporate seals to be hereto affixed this 28th day of March, 2018.

Bruce G. Kelley, Chairman of Companies 2, 3, 4, 5 & 6; President of Company 1; Vice Chairman and CEO of Company 7

Todd Strother
Vice President

Seals

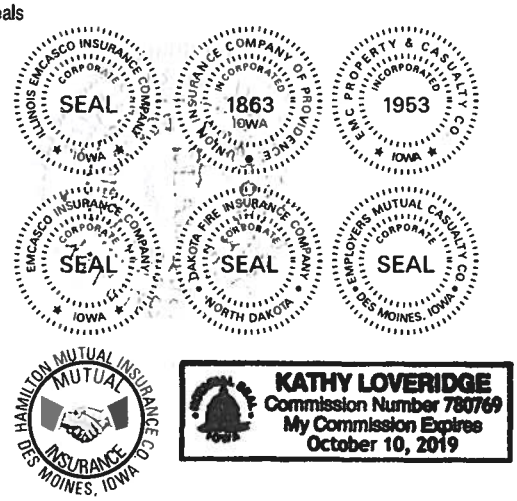

KATHY LOVERIDGE
Commission Number 780769
My Commission Expires
October 10, 2019

On this 28th day of March, 2018 before me a Notary Public in and for the State of Iowa, personally appeared Bruce G. Kelley and Todd Strother, who, being by me duly sworn, did say that they are, and are known to me to be the Chairman, President, Vice Chairman and CEO, and/or Vice President, respectively, of each of the Companies above; that the seals affixed to this instrument are the seals of said corporations; that said instrument was signed and sealed on behalf of each of the Companies by authority of their respective Boards of Directors; and that the said Bruce G. Kelley and Todd Strother, as such officers, acknowledged the execution of said instrument to be their voluntary act and deed, and the voluntary act and deed of each of the Companies.

My Commission Expires October 10, 2019.

Kathy Loveridge
Notary Public in and for the State of Iowa

CERTIFICATE

I, James D. Clough, Vice President of the Companies, do hereby certify that the foregoing resolution of the Boards of Directors by each of the Companies, and this Power of Attorney issued pursuant thereto on 28th day of March, 2018, are true and correct and are still in full force and effect.

In Testimony Whereof I have subscribed my name and affixed the facsimile seal of each Company this 21st day of November, 2018.

Vice President

"For verification of the authenticity of the Power of Attorney you may call (515) 345-2689."

HUB International Insurance Services

111 S. Tejon Street, Suite 113
Colorado Springs, CO 80903
Toll-free: 1-800-748-2400

hubinternational.com

Advocacy. Tailored Insurance Solutions. Peace of Mind.

November 21, 2018

Assistant City Attorney
201 W. Colfax Ave. Dept 1207
Denver, Colorado 80202

RE: Global Underground Corporation
Contract No.: 201845992
Project Name: 2018 Directional Boring Master On-Call
Performance & Payment Bond No.: S464211

Dear Assistant City Attorney,

The Performance and Payment Bond covering the above captioned project were executed by this agency, through Employers Mutual Casualty Company, on November 21, 2018.

We hereby authorize the City and County of Denver, Department of Public Works, to date all bonds and powers of attorney to coincide with the date of the contract.

If you should have any additional questions or concerns, please don't hesitate to give me a call at 719-884-0709.

Sincerely,

Anne Lindsay

Anne Lindsay
Surety Account Representative

HUB International Colorado
Office: 719-884-0709
Toll-free: 800-748-2400
anne.lindsay@hubinternational.com

GLOBUND-01 TCORNEJO

ACORD

CERTIFICATE OF LIABILITY INSURANCE

DATE (MM/DD/YYYY) 11/21/2018

THIS CERTIFICATE IS ISSUED AS A MATTER OF INFORMATION ONLY AND CONFERS NO RIGHTS UPON THE CERTIFICATE HOLDER. THIS CERTIFICATE DOES NOT AFFIRMATIVELY OR NEGATIVELY AMEND, EXTEND OR ALTER THE COVERAGE AFFORDED BY THE POLICIES BELOW. THIS CERTIFICATE OF INSURANCE DOES NOT CONSTITUTE A CONTRACT BETWEEN THE ISSUING INSURER(S), AUTHORIZED REPRESENTATIVE OR PRODUCER, AND THE CERTIFICATE HOLDER.

IMPORTANT: If the certificate holder is an ADDITIONAL INSURED, the policy(ies) must have ADDITIONAL INSURED provisions or be endorsed. If SUBROGATION IS WAIVED, subject to the terms and conditions of the policy, certain policies may require an endorsement. A statement on this certificate does not confer rights to the certificate holder in lieu of such endorsement(s).

PRODUCER License # 0757776
HUB International Insurance Services (COL)
1125 17th Street, Suite 900
Denver, CO 80202

CONTACT NAME: Deanna Baldridge
PHONE (A/C, No, Ext): (720) 207-2415 FAX (A/C, No): (866) 243-0727
E-MAIL ADDRESS: Deanna.Baldridge@hubinternational.com

INSURER(S) AFFORDING COVERAGE	NAIC #
INSURER A : The Phoenix Insurance Company	25623
INSURER B : The Travelers Indemnity Company of America	25666
INSURER C : Travelers Property Casualty Company of America	25674
INSURER D :	
INSURER E :	
INSURER F :	

INSURED
Global Underground Corporation
641 Winters Drive
Colorado Springs, CO 80907

COVERAGES CERTIFICATE NUMBER: REVISION NUMBER:

THIS IS TO CERTIFY THAT THE POLICIES OF INSURANCE LISTED BELOW HAVE BEEN ISSUED TO THE INSURED NAMED ABOVE FOR THE POLICY PERIOD INDICATED. NOTWITHSTANDING ANY REQUIREMENT, TERM OR CONDITION OF ANY CONTRACT OR OTHER DOCUMENT WITH RESPECT TO WHICH THIS CERTIFICATE MAY BE ISSUED OR MAY PERTAIN, THE INSURANCE AFFORDED BY THE POLICIES DESCRIBED HEREIN IS SUBJECT TO ALL THE TERMS, EXCLUSIONS AND CONDITIONS OF SUCH POLICIES. LIMITS SHOWN MAY HAVE BEEN REDUCED BY PAID CLAIMS.

INSR LTR	TYPE OF INSURANCE	ADDL INSD	SUBR WVD	POLICY NUMBER	POLICY EFF (MM/DD/YYYY)	POLICY EXP (MM/DD/YYYY)	LIMITS	
A	X COMMERCIAL GENERAL LIABILITY CLAIMS-MADE X OCCUR X PD Deductible 5,000 GEN'L AGGREGATE LIMIT APPLIES PER: POLICY X PRO-JECT LOC OTHER:	X	X	DTCO3C885207PHXF18	10/13/2018	10/13/2019	EACH OCCURRENCE DAMAGE TO RENTED PREMISES (Ea occurrence) MED EXP (Any one person) PERSONAL & ADV INJURY GENERAL AGGREGATE PRODUCTS - COMP/OP AGG	$ 1,000,000 $ 300,000 $ 10,000 $ 1,000,000 $ 2,000,000 $ 2,000,000 $
B	AUTOMOBILE LIABILITY X ANY AUTO OWNED AUTOS ONLY SCHEDULED AUTOS HIRED AUTOS ONLY NON-OWNED AUTOS ONLY	X	X	DT8103C885207IND18	10/13/2018	10/13/2019	COMBINED SINGLE LIMIT (Ea accident) BODILY INJURY (Per person) BODILY INJURY (Per accident) PROPERTY DAMAGE (Per accident)	$ 1,000,000 $ $ $ $
C	X UMBRELLA LIAB X OCCUR EXCESS LIAB CLAIMS-MADE DED X RETENTION $ 10,000			DTSMCUP3C885207TIL18	10/13/2018	10/13/2019	EACH OCCURRENCE AGGREGATE	$ 9,000,000 $ 9,000,000 $
	WORKERS COMPENSATION AND EMPLOYERS' LIABILITY ANY PROPRIETOR/PARTNER/EXECUTIVE OFFICER/MEMBER EXCLUDED? Y / N (Mandatory in NH) If yes, describe under DESCRIPTION OF OPERATIONS below	N / A					PER STATUTE OTH-ER E.L. EACH ACCIDENT E.L. DISEASE - EA EMPLOYEE E.L. DISEASE - POLICY LIMIT	$ $ $

DESCRIPTION OF OPERATIONS / LOCATIONS / VEHICLES (ACORD 101, Additional Remarks Schedule, may be attached if more space is required)
Project: Contract Control #201845992 - 2018 Directional Boring Master On-Call
City and County of Denver is included as additional insured under General Liability. A waiver of subrogation applies to General Liability. A 30 day notice of cancellation applies.

CERTIFICATE HOLDER

City and County of Denver
201 W. Colfax Ave
Denver, CO 80202

CANCELLATION

SHOULD ANY OF THE ABOVE DESCRIBED POLICIES BE CANCELLED BEFORE THE EXPIRATION DATE THEREOF, NOTICE WILL BE DELIVERED IN ACCORDANCE WITH THE POLICY PROVISIONS.

AUTHORIZED REPRESENTATIVE

© 1988-2015 ACORD CORPORATION. All rights reserved.
The ACORD name and logo are registered marks of ACORD

CERTIFICATE OF LIABILITY INSURANCE

DATE (MM/DD/YYYY): 02/01/2018

THIS CERTIFICATE IS ISSUED AS A MATTER OF INFORMATION ONLY AND CONFERS NO RIGHTS UPON THE CERTIFICATE HOLDER. THIS CERTIFICATE DOES NOT AFFIRMATIVELY OR NEGATIVELY AMEND, EXTEND OR ALTER THE COVERAGE AFFORDED BY THE POLICIES BELOW. THIS CERTIFICATE OF INSURANCE DOES NOT CONSTITUTE A CONTRACT BETWEEN THE ISSUING INSURER(S), AUTHORIZED REPRESENTATIVE OR PRODUCER, AND THE CERTIFICATE HOLDER.

IMPORTANT: If the certificate holder is an ADDITIONAL INSURED, the policy(ies) must have ADDITIONAL INSURED provisions or be endorsed. If SUBROGATION IS WAIVED, subject to the terms and conditions of the policy, certain policies may require an endorsement. A statement on this certificate does not confer rights to the certificate holder in lieu of such endorsement(s).

PRODUCER
Willis of Greater Kansas, Inc.
c/o 26 Century Blvd
P.O. Box 305191
Nashville, TN 372305191 USA

CONTACT NAME:
PHONE (A/C, No, Ext): 1-877-945-7378 FAX (A/C, No): 1-888-467-2378
E-MAIL ADDRESS: certificates@willis.com

INSURER(S) AFFORDING COVERAGE	NAIC #
INSURER A: ACE American Insurance Company	22667
INSURER B:	
INSURER C:	
INSURER D:	
INSURER E:	
INSURER F:	

INSURED
Barrett Business Services, Inc.
8100 NE Parkway Drive
Suite 200
Vancouver, WA 98662

COVERAGES **CERTIFICATE NUMBER:** W1949506 **REVISION NUMBER:**

THIS IS TO CERTIFY THAT THE POLICIES OF INSURANCE LISTED BELOW HAVE BEEN ISSUED TO THE INSURED NAMED ABOVE FOR THE POLICY PERIOD INDICATED. NOTWITHSTANDING ANY REQUIREMENT, TERM OR CONDITION OF ANY CONTRACT OR OTHER DOCUMENT WITH RESPECT TO WHICH THIS CERTIFICATE MAY BE ISSUED OR MAY PERTAIN, THE INSURANCE AFFORDED BY THE POLICIES DESCRIBED HEREIN IS SUBJECT TO ALL THE TERMS, EXCLUSIONS AND CONDITIONS OF SUCH POLICIES. LIMITS SHOWN MAY HAVE BEEN REDUCED BY PAID CLAIMS.

INSR LTR	TYPE OF INSURANCE	ADDL INSD	SUBR WVD	POLICY NUMBER	POLICY EFF (MM/DD/YYYY)	POLICY EXP (MM/DD/YYYY)	LIMITS	
	COMMERCIAL GENERAL LIABILITY CLAIMS-MADE / OCCUR						EACH OCCURRENCE	$
							DAMAGE TO RENTED PREMISES (Ea occurrence)	$
							MED EXP (Any one person)	$
							PERSONAL & ADV INJURY	$
	GEN'L AGGREGATE LIMIT APPLIES PER: POLICY / PRO-JECT / LOC						GENERAL AGGREGATE	$
							PRODUCTS - COMP/OP AGG	$
	OTHER:							$
	AUTOMOBILE LIABILITY ANY AUTO						COMBINED SINGLE LIMIT (Ea accident)	$
	OWNED AUTOS ONLY / SCHEDULED AUTOS						BODILY INJURY (Per person)	$
	HIRED AUTOS ONLY / NON-OWNED AUTOS ONLY						BODILY INJURY (Per accident)	$
							PROPERTY DAMAGE (Per accident)	$
								$
	UMBRELLA LIAB / OCCUR						EACH OCCURRENCE	$
	EXCESS LIAB / CLAIMS-MADE						AGGREGATE	$
	DED / RETENTION $							$
A	WORKERS COMPENSATION AND EMPLOYERS' LIABILITY ANYPROPRIETOR/PARTNER/EXECUTIVE OFFICER/MEMBER EXCLUDED? Y/N (Mandatory in NH) If yes, describe under DESCRIPTION OF OPERATIONS below	N/A	X	WCU C49111915	02/01/2018	02/01/2019	X PER STATUTE / OTH-ER	
							E.L. EACH ACCIDENT	$ 2,000,000
							E.L. DISEASE - EA EMPLOYEE	$ 2,000,000
							E.L. DISEASE - POLICY LIMIT	$ 2,000,000

DESCRIPTION OF OPERATIONS / LOCATIONS / VEHICLES (ACORD 101, Additional Remarks Schedule, may be attached if more space is required)

State Covered: Colorado.

Limits shown are above a $2,000,000 Self Insured Retention.

CERTIFICATE HOLDER

Proof of Coverage

CANCELLATION

SHOULD ANY OF THE ABOVE DESCRIBED POLICIES BE CANCELLED BEFORE THE EXPIRATION DATE THEREOF, NOTICE WILL BE DELIVERED IN ACCORDANCE WITH THE POLICY PROVISIONS.

AUTHORIZED REPRESENTATIVE

Brian Hate

© 1988-2015 ACORD CORPORATION. All rights reserved.

The ACORD name and logo are registered marks of ACORD

DENVER
THE MILE HIGH CITY

PERFORMANCE AND PAYMENT BOND
SURETY AUTHORIZATION
(SAMPLE)

FAX NUMBER: 720-913-3183
TELEPHONE NUMBER: 720-913-3267

Assistant City Attorney
201 W. Colfax Ave. Dept 1207
Denver, Colorado 80202

RE: (Company name)

Contract No: 201845992
Project Name: 2018 Directional Boring Master On-Call
Contract Amount:
Performance and Payment Bond No.:

Dear Assistant City Attorney,

The Performance and Payment Bonds covering the above captioned project were executed by this agency, through _____ insurance company, on _____, 20__.

We hereby authorize the City and County of Denver, Department of Public Works, to date all bonds and powers of attorney to coincide with the date of the contract.

If you should have any additional questions or concerns, please don't hesitate to give me a call at _____.

Thank you.

Sincerely,

Denver Public Works/Office of the Executive Director
201 West Colfax Avenue, Dept 608 | Denver, CO 80202
www.denvergov.org/dpw
p. 720.865.8630 | f. 720.865.8795

311 | POCKETGOV.COM | DENVERGOV.ORG | DENVER 8 TV

DENVER
THE MILE HIGH CITY

NOTICE OF APPARENT LOW BIDDER
(SAMPLE)

Current Date

To:

Gentlemen:

The MANAGER OF PUBLIC WORKS has considered the Bids submitted on October 25, 2018 for work to be done and materials to be furnished in and for:

PROJECT No. 201845992; 2018 DIRECTIONAL BORING MASTER ON-CALL

as set forth in detail in the Contract Documents for the City and County of Denver, Colorado. It appears that your Bid is fair, equitable, and to the best interest of the City and County; therefore, said Bid is hereby accepted at the bid price contained herein, subject to execution of the Contract Documents and your furnishing the items specified below, the total cost thereof (Contract Amount Written), (Contract Amount Numeric).

It will be necessary for you to appear forthwith at the office of the Department of Public Works, Finance and Administration, 201 W. Colfax Ave. Dept 614, Denver, Colorado 80202, to receive the said Contract Documents, execute the same and return them to the Department of Public Works, Finance and Administration, within the time limit set forth in the Bid Proposal.

In accordance with the requirements set forth in the Contract Documents, you are required to furnish the following documents:

a. Insurance Certificates: General Liability and Automotive Liability, Workman's Compensation and Employer Liability; or any other coverage required by the contract; and
b. One original plus four copies of the Power of Attorney relative to Performance and/or Payment Bond;

All construction Contracts made and entered into by the City and County of Denver are subject to Affirmative Action and Equal Opportunity Rules and Regulations, as adopted by the Manager of Public Works, and each contract requiring payment by the City of one-half million dollars ($500,000.00) or more shall first be approved by the City Council acting by ordinance and in accordance with Section 3.2.6 of the Charter of the City and County of Denver.

Prior to issuance of Notice to Proceed, all Equal Opportunity requirements must be completed. Additional information may be obtained by contacting the Director of Contract Compliance at (720-913-1700).

NOTICE OF APPARENT LOW BIDDER
(SAMPLE)

PROJECT NO. 201845992
Page 2

The Bid Security submitted with your Bid, will be returned upon execution of the Contract and furnishing of the Performance Bond. In the event you should fail to execute the Contract and to furnish the performance Bond within the time limit specified, said Bid Security will be retained by the City and County of Denver as liquidated damages, and not as a penalty for the delay and extra work caused thereby.

Dated at Denver, Colorado this _____ day of _____20___.

CITY AND COUNTY OF DENVER

By _____
Manager of Public Works

Denver Public Works/Office of the Executive Director
201 West Colfax Avenue, Dept 608 | Denver, CO 80202
www.denvergov.org/dpw
p. 720.865.8630 | f. 720.865.8795

311 | POCKETGOV.COM | DENVERGOV.ORG | DENVER 8 TV

DENVER
THE MILE HIGH CITY

Current Date

NOTICE TO PROCEED
(SAMPLE)

Name
Company
Street
City/State/Zip

CONTRACT NO. 201845992; 2018 DIRECTIONAL BORING MASTER ON-CALL

In accordance with General Contract Condition 302 of the Standard Specifications for Construction, General Contract Conditions, 2011 Edition, you are hereby authorized and directed to proceed on _____ with the work of constructing contract number ____201845992, as set forth in detail in the contract documents for the City and County of Denver.

With a contract time of _____ calendar days, the project must be complete on or before _____.

If you have not already done so, you must submit your construction schedule, in accordance with General Contract Condition 306.2.B, to the Project Manager within 10 days. Additionally, you must submit your tax exempt certificate, and copies of your subcontractors' certificates, in accordance with General Contract Condition 323.5, to the Project Manager as soon as possible. Failure to submit these certificates will delay processing of payment applications.

Sincerely,

Lesley B. Thomas
City Engineer

cc:

Denver Public Works/Office of the Executive Director
201 West Colfax Avenue, Dept 608 | Denver, CO 80202
www.denvergov.org/dpw
p. 720.865.8630 | f. 720.865.8795

311 | POCKETGOV.COM | DENVERGOV.ORG | DENVER 8 TV

DENVER
THE MILE HIGH CITY

Certificate of Contract Release
(SAMPLE)

Date

Name
Company
Street
City/State/Zip

RE: Certificate of Contract Release for
201845992, 2018 DIRECTIONAL BORING MASTER ON-CALL

Received this date of the City and County of Denver, as full and final payment of the cost of the improvements provided for in the foregoing contract, _____ dollars and _____ cents ($), in cash, being the remainder of the full amount accruing to the undersigned by virtue of said contract; said cash also covering and including full payment for the cost of all extra work and material furnished by the undersigned in the construction of said improvements, and all incidentals thereto, and the undersigned hereby releases said City and County of Denver from any and all claims or demands whatsoever, regardless of how denominated, growing out of said contract.

And these presents are to certify that all persons performing work upon or furnishing materials for said improvements under the foregoing contract have been paid in full and this payment to be made is the last or final payment.

_____

Contractor's Signature Date Signed

If there are any questions, please contact me by telephone at (720) 913-XXXX. Please return this document via facsimile at (720) 913-1805 and mail to original to the above address.

Denver Public Works/Office of the Executive Director
201 West Colfax Avenue, Dept 608 | Denver, CO 80202
www.denvergov.org/dpw
p. 720.865.8630 | f. 720.865.8795

311 | POCKETGOV.COM | DENVERGOV.ORG | DENVER 8 TV

SC-28

On Call Specific Contract Forms

DENVER
THE MILE HIGH CITY

EXAMPLE

CHANGE RIDER
#_____

For Bond No. _____ on behalf of _____
_____ dated _____, _____, and in favor of the City and County of Denver.

The surety hereby gives its consent to the incorporation of the obligations and requirements set forth in Work Order No. 201845992, Proposal Request No. __, Contract Control No. _____, **2018 DIRECTIONAL BORING MASTER ON-CALL**, and under Bond No. _____, a copy of the penal sum of this bond shall be increased by _____
_____ dollars and _____ cents ($_____), lawful money of the United States of America.

Provided, however, that the aggregate liability of the surety for any losses occurring prior to the effective date of this change shall not exceed $_____, unless modified by subsequent Change Riders. In no event shall the suretys' liability be cumulative.

Except as modified herein, Bond No. _____, dated _____, _____, is affirmed and ratified in each and every particular.

Executed this _____ day of _____, 20__.

(Contractor) (Surety)

_____ _____

Approved for the City and County of Denver

By:_____

Proposal Request

CONTRACT NO. 201845992 – **2018 DIRECTIONAL BORING MASTER ON-CALL**

CITY & COUNTY OF DENVER, PROJECT MANAGMENT OFFICE
DEPARTMENT OF PUBLIC WORKS, 201 W. COLFAX AVE., DEPT. 509 •DENVER, CO, 80202•(720) 913-XXXX, FAX (720) 913-XXXX

CONTRACTOR:_____ PROPOSAL REQUEST NO._____:
PROJECT ID #: _____ DATE:_____
WORK ORDER NAME: _____
CONTRACT NO._____PROJECT NAME_____

Submit an itemized quotation for the work described below. Include all costs, time necessary to perform the described work, and the MBE & WBE participation (percentage of work) on the Proposal Request Pricing Worksheet.

This is not a change order, field order or a notice to proceed with the work described.

Description: EXAMPLE

Note: All work shall be performed under Annual Contract No. 201845992 dated_____, 20__.
Liquidated Damages for this Project will be $____ per day.)

Proposal Request Pricing Worksheet to be returned by_____, 20__.

Attachments:

ISSUED BY: _____
PUBLIC WORKS/TRANSPORTATION/PROJECT MANAGEMENT OFFICE
cc:

PROPOSAL REQUEST PRICING WORKSHEET
CONTRACT NO.
PROJECT NAME
CITY & COUNTY OF DENVER
CITY ENGINEERING, PROJECT MANAGEMENT OFFICE
DEPARTMENT OF PUBLIC WORKS 201 W. COLFAX AVE., DEPT. 509-DENVER, CO 80202-(720)913-4511, FAX (720)913-4544

CONTRACTOR: _____ PROPOSAL REQUEST NO.:

CONTRACT NO. _____ ___WORK ORDER NO.:

PROJECT NAME: _____ ___DATE:

UNIT PRICES:
Provide Unit Price Sheets for Proposal Requests, identifying applicable unit prices

ITEM NO	ITEM DESCRIPTION	TOTALS

PROPOSAL REQUEST PRICING WORKSHEET
CONTRACT NO.
PROJECT

CITY & COUNTY OF DENVER
CITY ENGINEERING, PROJECT MANAGEMENT OFFICE
DEPARTMENT OF PUBLIC WORKS-201 W. COLFAX AVE., DEPT. 509-DENVER, CO 80202-(720) 913-4511, FAX (720) 913-4543

CONTRACTOR: PROPOSAL REQUEST NO.: _____

CONTRACT NO. 201207366 WORK ORDER NO.:

PROJECT NAME: Date:

UNIT PRICES:
Provide Unit Price Sheets for Proposal Requests, identifying applicable unit prices

ITEM NO	ITEM DESCRIPITION	UNIT PRICE, BID	QUANTITY	TOTALS QUANTITY
	BID UNIT PRICE SUBTOTAL			$ -

SUBCONTRACTORS - Provide Subcontractor Worksheets for each subcontractor.

		TOTALS
13		
14		
15		
16		
17		
18		
19		
20		
21		
22		
23	SUBTOTAL FOR SUBCONTRACTORS	$ -

	GENERAL CONTRACTOR		UNIT COST	QUANTITY	TOTALS
24					
25					
26					
27					
28					
29					
30					
31					
32					
33	SUBTOTAL				$ -
34		-			
35					
36					
37					
38	Unit Price Total				$ -
39	Subcontractor Total				$ -
40	Subtotal				$ -
41					
42	Total Proposal				$ -

EXAMPLE

PROPOSAL REQUEST PRICE $ -

TIME TO COMPLETE THE WORK IN THIS PROPOSAL REQUEST _____ CALENDAR DAYS

TOTAL MBE COST OF WORK _____ PERCENTAGE _____

TOTAL WBE COST OF WORK _____ PERCENTAGE _____

CONTRACTOR'S SIGNATURE _____ DATE: _____

SUBCONTRACTOR WORKSHEET FOR PROPOSAL REQUESTS

MASTER CONTRACT NO.

Project Name
CITY & COUNTY OF DENVER
CITY ENGINEERING, PROJECT MANAGEMENT OFFICE
DEPARTMENT OF PUBLIC WORKS-201 W. COLFAX AVE., DEPT. 509-DENVER, CO 80202- (720) 913-4511, FAX (720) 913-

CONTRACTOR: DATE: _____

MASTER CONTRACT NO. PROPOSAL REQUEST NO.: _____

PROJECT NAME:

SUBCONTRACTOR NAME:

	WORK ITEMS		UNIT PRICE	QUANTITY	TOTALS
1					
2					
3					
4					
5					
6					$ -
7					$ -
8					$ -
9					$ -
10					$ -
12					$ -
13					$ -
14					$ -
15	SUBTOTAL	-			$ -
16					
17					
18	SUBTOTAL				$ -
19					
20	TOTAL				$ -
					$ -

EXAMPLE

On-Call Construction Work Order

Department of Public Works
Engineering – Capital Project Management
201 W. Colfax Avenue, Dept 506, Denver, CO 80202
p: 720-913-4501 f: 720-913-4544
www.denvergov.org/Capital_Projects_Center

Contractor: _____ Business Unit: _____
Vendor ID: _____ Project No.: _____
Master Contract/Contract: _____ Project Name: _____
Work Order No.: _____ Project Manager: _____
Fund/Org/Acct: _____ Alfresco Number: _____

It is hereby mutually agreed that when this WORK ORDER has been signed by the contracting parties, the following described work order shall be executed by the contractor without changing the terms of the Contract except as herein stipulated and agreed:

The sum, as indicated above, constitutes full and complete consideration, payment and satisfaction to the Contractor for the above described scope of work, and the Contractor hereby agrees to make no further claims, demands, or requests of any kind whatsoever for further moneys, extensions of time or other consideration for the above described scope of work to the Contract.

THE CONTRACTOR AGREES to furnish all material and labor and perform all work required to complete the above described work in accordance with requirements for similar work covered by the Work Order, except as otherwise stipulated herein, for the following considerations:

The Sum of $_____

Work Order Duration time _____Calendar Days

Completion Date:_____

Accepted for Contractor by_____Title_____Date_____

WORK ORDER NO.	**COST SUMMARY**
(By Project Manager)	
Original Work Order Amount	$
Previous Work Order Additions	$
SUB-TOTAL	$
Previous Work Order Change Deductions	$
Net prior to this Work Order Change	$
This Work Order Change – Add <Deduct>	$
REVISED TOTAL WORK ORDER AMOUNT	$

COST SUMMARY FOR CONTRACT NO.	
Total of all Work Orders Issued	$0.00
Previous Additions/ Deductions	$0
Net Prior to this Change	$0.00
This Change – ☐ Add or ☒ Delete	$0.00
Revised Contract Amount	$0.00
Maximum Contract Amount	$500,000.00
Amount Available	$500,000.00

Approved – City Attorney (if applicable) **Date**

Approved – Manager **Date**

Approved – Director **Date**

Approved – Using Agency (If non PW) **Date**

Approved – Project Supervisor **Date**

EXAMPLE

NOTE: No person shall authorize or perform any of the above work until the work order has all signatures and has been distributed. Distribution: Prevailing Wage: AUDPWPayRequest@denvergov.org:: DSBO@ci.denver.co.us, Project Manager e-mail, Using Agency and pw.contracts@denvergov.org (for pre-encumbrance).

On-Call Construction Work Order Change

Department of Public Works
Engineering
201 W. Colfax Avenue, Dept 506, Denver, CO 80202
p: 720-913-4501 f: 720-913-4544
www.denvergov.org/publicworks

Contractor: _____ Business Unit: _____
Vendor ID No. _____ Project No. _____
Master Contract/Contract # _____ Project Name: _____
Work Order No: _____ Project Manager _____
Change Order No.: _____ Fund/Org _____
Subclass/Program _____

It is hereby mutually agreed that when this CHANGE ORDER has been signed by the contracting parties, the following described changes shall be executed by the contractor without changing the terms of the Contract except as herein stipulated and agreed:

The additional sum, as indicated above, constitutes full and complete consideration, payment and satisfaction to the Contractor for the above described changes to the Contract, and the Contractor hereby agrees to make no further claims demands, or requests of any kind whatsoever for further moneys, extensions of time or other consideration for the above described changes to the Contract.

THE CONTRACTOR AGREES to furnish all material and labor and perform all work required to complete the above described changes in accordance with requirements for similar work covered by the Contract, except as otherwise stipulated herein, for the following considerations:

☐ **Add or** ☐ **Subtract to the Contract the Sum of** _____

Adjust the Contract completion by ____ **Calendar Days**

New Completion Date: _____

Accepted for Contractor by _____ **Title** _____ **Date** _____

WORK ORDER NO. (By Project Manager)	COST SUMMARY
Original Work Order Amount	$
Previous Work Order Additions	$
SUB-TOTAL	$
Previous Work Order Change Deductions	$
Net prior to this Work Order Change	$
This Work Order Change – Add <Deduct>	$
REVISED TOTAL WORK ORDER AMOUNT	$

COST SUMMARY FOR CONTRACT NO.	
Total of all Work Orders Issued	$
Previous Additions/ Deductions	$
Net Prior to this Change	$
This Change – ☐ Add or ☒ Delete	$
Revised Contract Amount	$
Maximum Contract Amount	$500,000.00
Amount Available	$500,000.00

Approved – City Attorney (If Bond rider) Date

Acknowledged by Director – DSBO Date

Approved [illegible] Date

Approved [illegible] Date

Approved [illegible] Date

Approved – Project Manager Date

EXAMPLE

NOTE: No person shall authorize or perform any of the above work until the change order has all signatures and has been distributed. Distribution: Prevailing Wage AUDPWPayRequest@denvergov.org; Auditor: Aud_Import@denvergov.org; DSBO@ci.denver.co.us, Project Manager e-mail, Using Agency.

CITY AND COUNTY OF DENVER

STATE OF COLORADO

DEPARTMENT OF PUBLIC WORKS

Addenda

Contract Number: 201845992

2018 Directional Boring

Master On-Call

September 25, 2018

CITY AND COUNTY OF DENVER
DEPARTMENT OF PUBLIC WORKS

CONTRACT NO.: 201844649
PROJECT NAME: 2018 Directional Boring Master On-call

ADDENDUM NO. 1 TO CONTRACT DOCUMENTS

Bidders are hereby instructed that the drawings, specifications, and other contract documents are modified, corrected, supplemented and/or superseded for the above-mentioned project as hereinafter described in the following attachments:

Special Conditions 19
The following language shall replace SC-19 in the contract documents:

"SC-19 PERFORMANCE AND PAYMENT BOND
Title 15 of the General Contract Conditions shall generally apply to this Contract as supplemented by the following:

A Performance and Payment Bond, in the form included in these Contract Documents, shall be furnished covering all Work performed hereunder. An initial bond in the amount of **Four hundred fifty thousand Dollars and No Cents ($450,000.00)** shall be provided at the time of Contract execution. As additional Work is authorized Contractor shall provide properly executed bond Change Riders, in the form included in these Contract Documents, in amount(s) not less than one hundred percent (100%) of all Work for which Final Settlement has not occurred."

Questions and Answers:

1. Will there be any requirements for an on-site environmental person (or a CABI) for the potholing or HDD work done under this contract (where subsurface debris or fill materials are being encountered) or will these services be provided by the City?
   A1. The City will take on the task. There will not be an environmental bid item on this contract, but if hazardous material is encountered, the Department of Public Health and Environment will be brought in to assess.

This **ADDENDUM** shall be attached to, become a part of, and be returned with the Bid Proposal.

Lesley B. Thomas
City Engineer

10.16.18
Date

The undersigned bidder acknowledges receipt of this Addendum. The Proposal submitted herewith is in accordance with the stipulations set forth herein.

Contractor

ADDENDUM NO. 1

Date

CITY AND COUNTY OF DENVER

STATE OF COLORADO

DENVER
THE MILE HIGH CITY

DEPARTMENT OF PUBLIC WORKS

Prevailing Wage Rates

Contract Number: 201845992

2018 Directional Boring

Master On-Call

September 25, 2018

DENVER
THE MILE HIGH CITY

Office of Human Resources

201 W. Colfax, Department 412
Denver, CO 80202
p: 720.913.5751
f: 720.913.5720
www.denvergov.org/csa

TO: All Users of the City of Denver Prevailing Wage Schedules

FROM: Susan Keller, Human Resources Technician, Classification & Compensation

DATE: Monday, July 16, 2018

SUBJECT: Latest Change to Prevailing Wage Schedules

Please be advised, prevailing wage rates for some building, heavy, highway, and residential construction trades have not been updated by the United States Department of Labor (DOL) since March 1, 2002. The Career Service Board, in their meeting held on April 21, 2011, approved the use of the attached supplemental wage rates until prevailing wage rates for these classifications of work are again published by the United States Department of Labor in accordance with the Davis-Bacon Act.

The effective date for this publication is **Friday, July 13, 2018** and applies to the City and County of Denver for **HIGHWAY CONSTRUCTION PROJECTS** in accordance with the Denver Revised Municipal Code, Section 20-76(c).

General Wage Decision No. CO180019
Superseded General Decision No. CO20170019
Modification No. 1
Publication Date: 07/13/2018
(5 pages)

Unless otherwise specified in this document, apprentices shall be permitted only if they are employed pursuant to, and individually registered in, a bona fide apprenticeship program registered with the U.S. Department. Of Labor (DOL). The employer and the individual apprentice must be registered in a program, which has received prior approval, by the DOL. Any employer, who employs an apprentice and is found to be in violation of this provision, shall be required to pay said apprentice the full journeyman scale.

Attachments as listed above.

311
for City Services
Denver gets it done!

General Decision Number: CO180019 07/13/2018 CO19

Superseded General Decision Number: CO20170019

State: Colorado

Construction Type: Highway

Counties: Denver and Douglas Counties in Colorado.

HIGHWAY CONSTRUCTION PROJECTS

Note: Under Executive Order (EO) 13658, an hourly minimum wage of $10.35 for calendar year 2018 applies to all contracts subject to the Davis-Bacon Act for which the contract is awarded (and any solicitation was issued) on or after January 1, 2015. If this contract is covered by the EO, the contractor must pay all workers in any classification listed on this wage determination at least $10.35 per hour (or the applicable wage rate listed on this wage determination, if it is higher) for all hours spent performing on the contract in calendar year 2018. The EO minimum wage rate will be adjusted annually. Please note that this EO applies to the above-mentioned types of contracts entered into by the federal government that are subject to the Davis-Bacon Act itself, but it does not apply to contracts subject only to the Davis-Bacon Related Acts, including those set forth at 29 CFR 5.1(a)(2)-(60). Additional information on contractor requirements and worker protections under the EO is available at www.dol.gov/whd/govcontracts.

Modification Number	Publication Date
0	01/05/2018
1	07/13/2018

* CARP9901-008 05/01/2018

	Rates	Fringes
CARPENTER (Form Work Only).....	$ 25.50	9.47

ELEC0068-016 03/01/2011

	Rates	Fringes
TRAFFIC SIGNALIZATION:		
Traffic Signal Installation		
Zone 1.....	$ 26.42	4.75%+8.68
Zone 2.....	$ 29.42	4.75%+8.68

TRAFFIC SIGNAL INSTALLER ZONE DEFINITIONS

Zone 1 shall be a 35 mile radius, measured from the following addresses in each of the following cities:
Colorado Springs - Nevada & Bijou
Denver - Ellsworth Avenue & Broadway
Ft. Collins - Prospect & College
Grand Junction - 12th & North Avenue
Pueblo - I-25 & Highway 50
All work outside of these areas shall be paid Zone 2 rates.

ENGI0009-008 05/01/2017

	Rates	Fringes
POWER EQUIPMENT OPERATOR:		
(3)-Hydraulic Backhoe (Wheel Mounted, under 3/4 yds), Hydraulic Backhoe (Backhoe/Loader combination), Drill Rig Caisson (smaller than Watson 2500 and similar), Loader (up to and including 6 cu. yd.)	$ 27.60	10.10
(3)-Loader (under 6 cu. yd.)		
Denver County	$ 27.60	10.10
(3)-Motor Grader (blade-rough)		
Douglas County	$ 27.60	10.10
(4)-Crane (50 tons and under), Scraper (single bowl, under 40 cu. yd)	$ 27.75	10.10
(4)-Loader (over 6 cu. yd)		
Denver County	$ 27.75	10.10
(5)-Drill Rig Caisson (Watson 2500 similar or larger), Crane (51-90 tons), Scraper (40 cu.yd and over),	$ 27.92	10.10
(5)-Motor Grader (blade-finish)		
Douglas County	$ 27.92	10.10
(6)-Crane (91-140 tons)	$ 28.55	10.10

SUCO2011-004 09/15/2011

	Rates	Fringes
CARPENTER (Excludes Form Work)	$ 19.27	5.08
CEMENT MASON/CONCRETE FINISHER		
Denver	$ 20.18	5.75
Douglas	$ 18.75	3.00
ELECTRICIAN (Excludes Traffic Signal Installation)	$ 35.13	6.83
FENCE ERECTOR (Excludes Link/Cyclone Fence Erection)	$ 13.02	3.20
GUARDRAIL INSTALLER	$ 12.89	3.20
HIGHWAY/PARKING LOT STRIPING:Painter		
Denver	$ 12.62	3.21
Douglas	$ 13.89	3.21
IRONWORKER, REINFORCING (Excludes Guardrail		

Installation)	$ 16.69	5.45
IRONWORKER, STRUCTURAL (Includes Link/Cyclone Fence Erection, Excludes Guardrail Installation)	$ 18.22	6.01
LABORER		
Asphalt Raker	$ 16.29	4.25
Asphalt Shoveler	$ 21.21	4.25
Asphalt Spreader	$ 18.58	4.65
Common or General		
Denver	$ 16.76	6.77
Douglas	$ 16.29	4.25
Concrete Saw (Hand Held)	$ 16.29	6.14
Landscape and Irrigation	$ 12.26	3.16
Mason Tender-Cement/Concrete		
Denver	$ 16.96	4.04
Douglas	$ 16.29	4.25
Pipelayer		
Denver	$ 13.55	2.41
Douglas	$ 16.30	2.18
Traffic Control (Flagger)	$ 9.55	3.05
Traffic Control (Sets Up/Moves Barrels, Cones, Install Signs, Arrow Boards and Place Stationary Flags)(Excludes Flaggers)	$ 12.43	3.22
PAINTER (Spray Only)	$ 16.99	2.87
POWER EQUIPMENT OPERATOR:		
Asphalt Laydown		
Denver	$ 22.67	8.72
Douglas	$ 23.67	8.47
Asphalt Paver		
Denver	$ 24.97	6.13
Douglas	$ 25.44	3.50
Asphalt Roller		
Denver	$ 23.13	7.55
Douglas	$ 23.63	6.43
Asphalt Spreader	$ 22.67	8.72
Backhoe/Trackhoe		
Douglas	$ 23.82	6.00
Bobcat/Skid Loader	$ 15.37	4.28
Boom	$ 22.67	8.72
Broom/Sweeper		
Denver	$ 22.47	8.72
Douglas	$ 22.96	8.22
Bulldozer	$ 26.90	5.59
Concrete Pump	$ 21.60	5.21
Drill		
Denver	$ 20.48	4.71
Douglas	$ 20.71	2.66
Forklift	$ 15.91	4.68
Grader/Blade		
Denver	$ 22.67	8.72
Guardrail/Post Driver	$ 16.07	4.41
Loader (Front End)		

Douglas	$ 21.67	8.22
Mechanic		
Denver	$ 22.89	8.72
Douglas	$ 23.88	8.22
Oiler		
Denver	$ 23.73	8.41
Douglas	$ 24.90	7.67
Roller/Compactor (Dirt and Grade Compaction)		
Denver	$ 20.30	5.51
Douglas	$ 22.78	4.86
Rotomill	$ 16.22	4.41
Screed		
Denver	$ 22.67	8.38
Douglas	$ 29.99	1.40
Tractor	$ 13.13	2.95
TRAFFIC SIGNALIZATION:		
Groundsman		
Denver	$ 17.90	3.41
Douglas	$ 18.67	7.17
TRUCK DRIVER		
Distributor		
Denver	$ 17.81	5.82
Douglas	$ 16.98	5.27
Dump Truck		
Denver	$ 15.27	5.27
Douglas	$ 16.39	5.27
Lowboy Truck	$ 17.25	5.27
Mechanic	$ 26.48	3.50
Multi-Purpose Specialty & Hoisting Truck		
Denver	$ 17.49	3.17
Douglas	$ 20.05	2.88
Pickup and Pilot Car		
Denver	$ 14.24	3.77
Douglas	$ 16.43	3.68
Semi/Trailer Truck	$ 18.39	4.13
Truck Mounted Attenuator	$ 12.43	3.22
Water Truck		
Denver	$ 26.27	5.27
Douglas	$ 19.46	2.58

WELDERS - Receive rate prescribed for craft performing operation to which welding is incidental.

Office of Human Resources
Supplemental rates
(Specific to the Denver Projects)
Revised 4/11/2017)

Classification		Base	Fringe
Ironworker (Ornamental)		$26.05	$12.00
Laborer	Removal of Asbestos	$21.03	$8.55
Line Construction	Lineman, Gas Fitter/Welder	$36.88	$9.55
	Line Eq Operator/Line Truck Crew	$25.74	$8.09
Millwright		$28.00	$10.00
Pipefitter		$30.45	$12.85
Plumber		$30.19	$13.55
Power Equipment Operator (Tunnels Above and Below Ground, shafts and raises):	Group 1	$25.12	$10.81
	Group 2	$25.47	$10.85
	Group 3	$25.57	$10.86
	Group 4	$25.82	$10.88
	Group 5	$25.97	$10.90
	Group 6	$26.12	$10.91
	Group 7	$26.37	$10.94
Power Equipment Operator	Group 1	$22.97	$10.60
	Group 2	$23.32	$10.63
	Group 3	$23.67	$10.67
	Group 4	$23.82	$10.68
	Group 5	$23.97	$10.70
	Group 6	$24.12	$10.71
	Group 7	$24.88	$10.79
Truck Driver	Group 1	$18.42	$10.00
	Group 2	$19.14	$10.07
	Group 3	$19.48	$10.11
	Group 4	$20.01	$10.16
	Group 5	$20.66	$10.23
	Group 6	$21.46	$10.31

Go to http://www.denvergov.org/Auditor to view the Prevailing Wage Clarification Document for a list of complete classifications used.

CITY AND COUNTY OF DENVER

STATE OF COLORADO

DENVER
THE MILE HIGH CITY

DEPARTMENT OF PUBLIC WORKS

Addenda

Contract Number: 201845992

● ●

2018 Directional Boring

Master On-Call

September 25, 2018

CITY AND COUNTY OF DENVER
DEPARTMENT OF PUBLIC WORKS

CONTRACT NO.: 201844649
PROJECT NAME: 2018 Directional Boring Master On-call

ADDENDUM NO. 1 TO CONTRACT DOCUMENTS

Bidders are hereby instructed that the drawings, specifications, and other contract documents are modified, corrected, supplemented and/or superseded for the above-mentioned project as hereinafter described in the following attachments:

Special Conditions 19
The following language shall replace SC-19 in the contract documents:

"SC-19 PERFORMANCE AND PAYMENT BOND
Title 15 of the General Contract Conditions shall generally apply to this Contract as supplemented by the following:

A Performance and Payment Bond, in the form included in these Contract Documents, shall be furnished covering all Work performed hereunder. An initial bond in the amount of **Four hundred fifty thousand Dollars and No Cents ($450,000.00)** shall be provided at the time of Contract execution. As additional Work is authorized Contractor shall provide properly executed bond Change Riders, in the form included in these Contract Documents, in amount(s) not less than one hundred percent (100%) of all Work for which Final Settlement has not occurred."

Questions and Answers:

1. Will there be any requirements for an on-site environmental person (or a CABI) for the potholing or HDD work done under this contract (where subsurface debris or fill materials are being encountered) or will these services be provided by the City?
   A1. The City will take on the task. There will not be an environmental bid item on this contract, but if hazardous material is encountered, the Department of Public Health and Environment will be brought in to assess.

This **ADDENDUM** shall be attached to, become a part of, and be returned with the Bid Proposal.

Lesley B. Thomas
City Engineer

10.16.18
Date

The undersigned bidder acknowledges receipt of this Addendum. The Proposal submitted herewith is in accordance with the stipulations set forth herein.

Contractor

ADDENDUM NO. 1

Date

CITY AND COUNTY OF DENVER

STATE OF COLORADO

DENVER
THE MILE HIGH CITY

DEPARTMENT OF PUBLIC WORKS

Technical Specifications

Contract Number: 201845992

2018 Directional Boring

Master On-Call

September 25, 2018

CITY AND COUNTY OF DENVER
PUBLIC WORKS - TRANSPORTATION
2018 DIRECTIONAL BORING MASTER ON-CALL
CCD PRO TRACKING NO. PWTES2015-005
PILAR NO. TBD

General Contract Conditions shall be the City and County of Denver, Department of Public Works, "Standard Specifications for Construction General Contract Conditions", 2011 edition and hereinafter modified shall be used for this project.

STANDARD CONSTRUCTION SPECIFICATIONS

The Standard Specifications for Construction for this Project shall consist of the applicable sections and subsections, numbered Section 200 through Section 700, of the 2017 "Colorado Department of Transportation Standard Specifications for Road and Bridge Construction."

The Colorado Department of Transportation General Provisions consists of Sections 100 through 109 of the above mentioned specifications. With the exception of General Provision Sections 101, all other General Provisions are not applicable to this Project and are hereby deleted. In place of the deleted sections, the City and County of Denver "Standard Specifications for Construction, General Contract Conditions," 2011 Edition, shall apply to this contract. Supplements or amendments to the Standard Specifications for Construction, General Contract Conditions are listed in the Special Contract Conditions.

The following Project Special Provisions take precedence over Specifications or Plans and supplement or amend the referenced "
Standard Specifications for Road and Bridge Construction" adopted in 2017 by the Colorado Department of Transportation, which is to be used to control construction of this Project.

DETAILED CONSTRUCTION SPECIFICATIONS

The Detailed Specifications for this project are defined in the City of Denver Contract Requirements and Contract Documents.

STANDARD CONSTRUCTION DETAILS

It is the intent of the City to use applicable details from the Colorado Department of Transportation M&S Standards, the City of Denver's Wastewater Management Division Standard Details, and the Denver Water Department's Standard Drawings, most recent editions. Drainage related appurtenances shall follow the City and County of Denver (CCD), Department of Public Works document titled "Storm Drainage and Sanitary Sewer Construction Detail and Technical Specifications". This document can be found at the following web address:
https://www.denvergov.org/Portals/711/documents/Standard%20Detail%20Drawings%20Full%20Set.pdf

The Colorado Department of Transportation (CDOT) Special Provisions, Standard Special Provisions are to be used for the project. Use CDOT Project Special Provisions that revise the above described documents, and prevail over above described documents.

CITY AND COUNTY OF DENVER
PUBLIC WORKS - TRANSPORTATION
2018 DIRECTIONAL BORING MASTER ON-CALL
CCD PRO TRACKING NO. PWTES2015-005
PILAR NO. TBD

The Colorado Department of Transportation's Standard Specifications for Road and Bridge Construction, dated 2017, controls construction of this project. The following Special Provisions supplement or modify the Standard Specifications and take precedence over the Standard Specifications and Plans.

PROJECT SPECIAL PROVISIONS

		Page No.
Index	(May 07, 2015)	i
Commencement and Completion of Work	(May 07, 2015)	1
Revision of Section 101 – Definitions and Terms	(May 07, 2015)	2
Revision of Section 107 – Legal Relations and Responsibility to Public	(May 07, 2015)	3
Revision of Section 107 – Legal Relations and Responsibility to Public	(May 07, 2015)	4
Revision of Section 202 – Removal of Structures and Obstructions	(May 07, 2015)	6
Revision of Section 203 – Excavation and Embankment	(May 07, 2015)	7
Revision of Section 208 – Erosion Control	(May 07, 2015)	8
Revision of Section 208 – Erosion Control	(May 07, 2015)	20
Revision of Section 212 – Seeding, Fertilizer, Soil Conditioner, and Sodding	(May 07, 2015)	21
Revision of Section 608 – Sidewalks and Bikeways	(May 07, 2015)	22
Revision of Section 613 – Lighting - Electrical Conductor Identification	(May 07, 2015)	25
Revision of Section 613 – Lighting - Electrical Conduit Pull Tape (Mule Tape)	(May 07, 2015)	26
Revision of Section 613 – Lighting - Electrical Conduit - General	(May 07, 2015)	27
Revision of Section 613 – Lighting - Pull Boxes/Manholes (General)	(May 07, 2015)	29
Revision of Section 613 – Lighting – Electrical Conduit Proofing & Repair	(May 07,2015)	31
Revision of Section 614 – Traffic Control Devices – Fiber Optic Cable – Repair	(May 07, 2015)	32
Revision of Section 614 – Traffic Control Devices - Traffic Signal Controller Base	(May 07, 2015)	33
Revision of Section 614 – Traffic Control Devices - Fiber Optic Cable (General)	(May 07, 2015)	34
Revision of Section 614 – Traffic Control Devices - Loose Tube Fiber Optic Cable	(May 07, 2015)	37
Revision of Section 614 - Traffic Control Devices – Traffic Valve Box	(May 07, 2015)	45
Revision of Section 626 – Mobilization	(May 07, 2015)	46
Revision of Section 630 – Construction Zone Traffic Control - UTC	(May 07, 2015)	47
Revision of Section 630 – Construction Zone Traffic Control	(May 07, 2015)	48

COMMENCEMENT AND COMPLETION OF WORK

Section 108 of the Standard Specifications is hereby revised for this project as follows:

Subsection 108.03 shall include the following:

The Contractor's progress schedule may be a Bar Chart Schedule.

Salient features to be shown on the Contractor's Progress Schedule are:

1. Notice to Proceed
2. Mobilization(s)
3. Erosion Control
4. Removals
5. Utilities
6. Boring Operation
7. Construction Traffic Control
8. Landscape Restoration

REVISION OF SECTION 101
DEFINITION AND TERMS

Section 101 of the Standard Specifications is hereby revised for this project as follows:

Technical Specifications related to construction materials and methods for the Work under this Contract shall consist of the *Colorado Department of Transportation Standard Specifications for Road and Bridge Construction* dated 2017.

Certain terms utilized in the Specifications referred to in the paragraph above shall be interpreted to have different meaning within the scope of this Contract. A summary of redefinitions follows:

Subsection 101.28	**"Department"** shall mean the City and County of Denver, Colorado.
Subsection 101.29	**"Engineer"** shall mean the Director of Public Works, Denver, Colorado, or designated representative.
Subsection 101.39	**"Laboratory"** shall mean City and County of Denver, Colorado or their designated representative.
Subsection 101.51	**"Project Engineer"** shall mean the Director of Public Works, Denver, Colorado, or designated representative.
Subsection 101.76	**"State"** shall mean City and County of Denver, Colorado (where applicable).

REVISION OF SECTION 107
LEGAL RELATIONS AND RESPOSIBILITY TO PUBLIC

Section 107 of the Standard Specifications is hereby revised for this project as follows:

Subsection 107.06 shall include the following:

(j) Contractors shall comply with the CCD Noise Control Ordinance for all construction activities scheduled to occur between the hours of 9:00 p.m. to 7:00 a.m. Monday – Friday and 5:00 p.m. and 8:00 a.m. Saturday through Sunday if noise levels are expected to exceed 50 dBA in residential areas or 60 dBA in commercial areas. Nighttime construction activities exceeding noise levels during these restricted hours may not be initiated without first obtaining this permit variance from CCD.

Under any circumstances where nighttime construction activities will take place between the restrictive hours listed above where noise levels will exceed the noise impact thresholds, the contractor is required to apply for a construction noise variance no less than one month before the startup date for construction. Note: the CCD board only meets the 2nd Thursday of every month.

Applications shall be submitted through the Denver Department of Environmental Health (DEH) at a cost of $25.00 for application processing.

The contractor is responsible for fulfilling the requirements set forth by the CCD and is responsible for obtaining the permit variance prior to the construction startup date. All exemption requests and permitting requirements will not be paid for separately, but will be included in the work. Copies of the final application approval shall be provided to the CDOT R1 Noise Specialist for recording and documentation purposes demonstrating compliance with the local agencies regulations.

If the Contractor is ordered to cease operations due to violations of a noise ordinance as a result of equipment back up alarms, the Contractor shall take whatever actions are necessary to comply with the ordinance and continue work on the project. This includes the option of using an observer in lieu of using the equipment's back up alarms as allowed by 29 CFR 1926.601(b) (4) (II) of the OSHA Safety and Health Standards. Should the Contractor fail to mitigate the noise ordinance violation, the Contractor shall be deemed to have waived any right to a claim as a result of work suspension or being required to perform the work at times not specified in the Contract.

If the Contractor uses an observer in lieu of back up alarms, the Contractor shall follow all of the OSHA requirements regarding the use of observers.

All costs incidental to the foregoing requirements shall be included in the original contract prices for the project.

REVISION OF SECTION 107
LEGAL RELATIONS AND RESPONSIBILITY TO PUBLIC

Section 107 of the Standard Specifications is hereby revised for this project as follows:

Subsection 107.12 shall include the following:

The Contractor shall save all existing vegetation (including trees, shrubs, ground covers, grasses, wetlands & riparian) in this area, except for that vegetation, which must be removed to accommodate construction of the project, per the plans. Specific areas of vegetation to be protected shall be as directed by the Engineer and shall be protected by using orange construction fencing, wire fencing with metal posts or silt fence. Fencing for trees shall be installed at the drip line of the tree or as approved by the Engineer. Equipment shall not be installed or stockpile material within 15 feet of existing trees to remain.

The Contractor shall perform all the work in such a manner that the least environmental damage will result. All questionable areas or items shall be brought to the attention of the Engineer for approval prior to removal or any damaging activity.

The Contractor shall promptly report any vegetation damaged or scarred during construction to the Engineer for assessment of damages. Damaged or destroyed fenced vegetation, shall be replaced at the expense of the Contractor. Vegetation of replaceable size shall be replaced at the Contractor's expense. When trees, shrubs beyond replaceable size or wetlands have been damaged or destroyed, the Contractor shall be liable for the appraised value based upon the official current publications. For trees and shrubs use the International Society of Arboriculture, Guide for Plant Appraisals. The Contractor shall pay any fines or jail time should a wetland be damaged, at no cost to the project. The value of disturbed vegetation shall be calculated according to the following formula:

(Vegetation size) x (Species) x (Location) x (Condition) x (Arborist or Wetland Specialist) = Vegetation value

A consulting Arborist retained by the Department will determine the value of the trees and shrubs. A consulting Wetland Specialist shall determine the value of the wetland or wetland species. This value will be deducted from any money due to the Contractor.

The determination as to whether a plant is of replacement size or beyond will be made by the City's Landscape Architect or Wetland Specialist. Contact Jim Myers at CCD Forestry Department.

If the fence is knocked down or destroyed by the Contractor, the Engineer will suspend the work, wholly or in part, until the fence is repaired to the Engineer's satisfaction at the Contractor's expense. Time lost due to such suspension will not be considered a basis for adjustment of time charges, but will be charged as contract time.

The City of Denver Parks & Recreation requires compliance with the following when work is required around trees in the public right of way. Trenching techniques shall comply with:

1. Trenching shall be no closer to the tree than the drip line (the area under the tree branches);
2. Adjust the route to avoid roots as much as possible;
3. Store soil opposite the tree side of the trench;
4. Backfill quickly and cleanly, and water roots deeply;
5. Tunneling/boring shall be at least 4 feet below ground;
6. No excavation or equipment storage shall occur in the critical root zone (see Standard Tree Detail for Tree Protection Area to calculate critical root zone area);

REVISION OF SECTION 107
LEGAL RELATIONS AND RESPONSIBILITY TO PUBLIC

1. All pit locations shall be staked and approved prior to an excavation;
2. No root 2 inches or larger shall be cut;
3. Minimize the work pit to no wider than the trench;
4. Where equipment is working near trees, protective fencing shall be erected at or just outside the drip line (see Standard Tree Detail for Tree Protection Area);
5. Prevent soil compaction by adding six to twelve inches of wood chips;
6. A licensed tree company shall be retained to prune broken branches as well as compensatory pruning if necessary to help the tree recover from root loss;
7. The City & County of Denver *Tree Retention and Protection Specifications* must be followed. For a copy of the Tree Protection Specifications, please contact the Forestry Office of Denver Parks and Recreation at 720-913-0651.

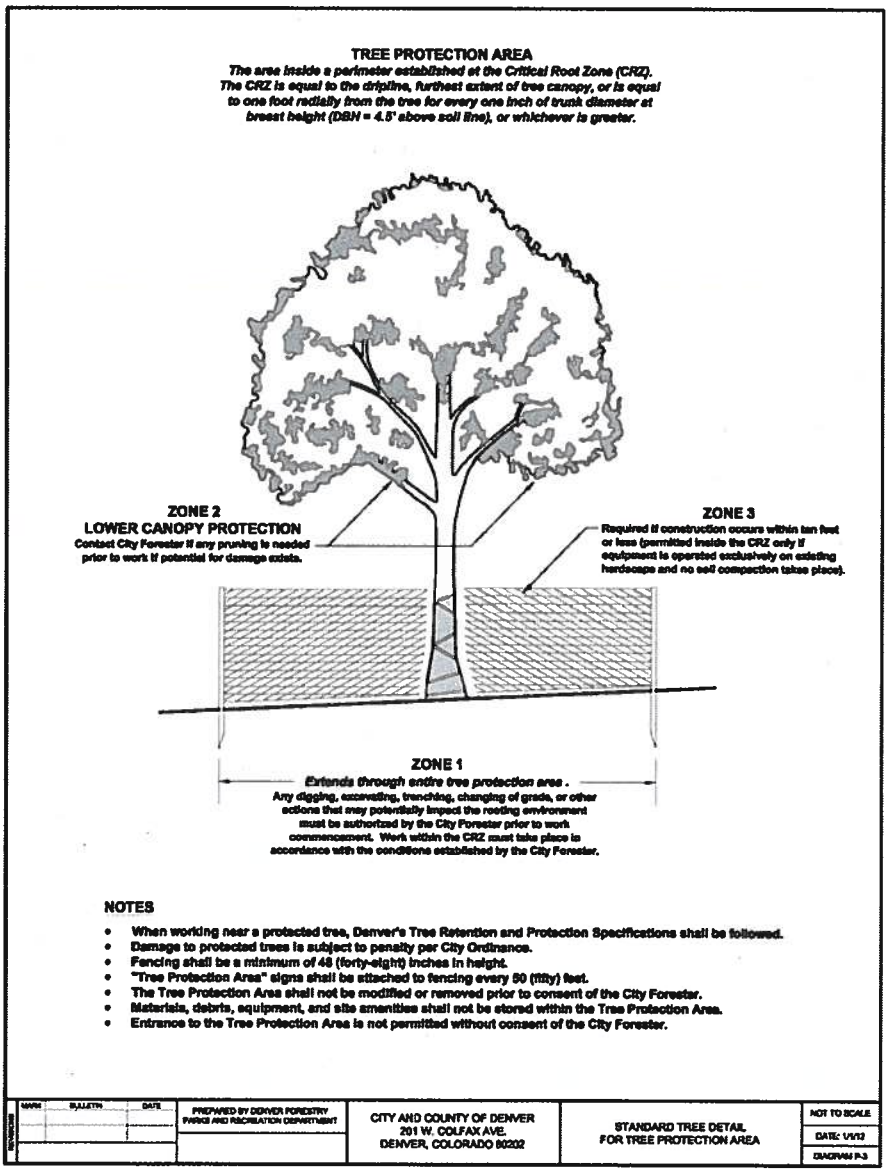

REVISION OF SECTION 202
REMOVAL OF STRUCTURES AND OBSTRUCTIONS

Section 202 of the Standard Specifications is hereby revised for this project as follows:

Subsection 202.01 shall include the following:

This work consists of the removal of the existing traffic signal controller cabinet base (concrete foundation or fiberglass) at locations as shown on the plans.

Subsection 202.02 shall include the following:

Work shall include the removal of concrete or fiberglass foundations, surrounding surface material, and modification/adjustment or replacement of the existing conduit sweeps. All debris is to be disposed of in accordance with applicable laws and regulations. Care shall be taken to not damage existing signal conductors, fiber cable or other wiring to ensure that they can be reused for installation of the new cabinet foundation.

At any locations where the existing cabinet bases are to be removed and a new cabinet will be installed, the old foundation shall be replaced with a new traffic pull box and the existing conduit adjusted as necessary. All conduit modifications required to set a new traffic pull box over the existing cabinet conduits are considered to be included in the work for this item and will not be paid separately. All surface materials such as concrete sidewalks shall be repaired in accordance with Denver Public Works Rules and Regulations.

Subsection 202.03 shall include the following:

The Contractor shall safeguard any salvageable materials designated by Denver Public Works – Transportation (Denver Traffic), and shall be responsible for the expense of repairing or replacing damaged or missing material until it is delivered to the City and County of Denver Traffic Maintenance Yard at 5440 Roslyn Street.

Designation of salvageable equipment and times for delivery of such items shall be coordinated with Denver Traffic (contact Chris Lillie at 720-865-4066).

Signal operations shall be maintained at each of the project intersections throughout construction.

Subsection 202.11 shall include the following:

Removal of Traffic Signal Cabinet Base shall be measured by the number of locations that require the physical removal of a concrete or fiberglass foundation.

Work shall include physical removal and disposal of existing foundation and surface material, back-filling or repair of excavated foundation location, including any associated conduit or sidewalk modifications, adjustments or replacement required at the location.

Subsection 202.12 shall include the following:

Payment will be made under:

Pay Item	Pay Unit
Removal of Traffic Signal Cabinet Base	Each

REVISION OF SECTION 203
EXCAVATION AND EMBANKMENT

Section 203 of the Standard Specification is hereby revised for this project as follows:

Subsection 203.05(g) Excavation shall include the following:

The work shall include One Pothole per utility per conduit crossing or as approved by the Engineer.

All surface material disturbed by potholing shall be restored in kind in accordance with the provisions of the most recent release of the *Standards and Details for the City and County of Denver*.

- All potholes must be core drilled.
- All potholes must be backfilled using only one of the following methods:
  - Wet Sand
  - Flowfill
  - Flashfill
  - The Contractor may submit a written request to use a material not specified above (squeegee, pea gravel, and native material will not be allowed)
- Potholes in an asphalt street must be patched back using hot bituminous asphalt, minimum 9-inch in depth.
- Potholes in a concrete street must be patched back with fast curing high strength concrete no less than 8000 psi in 28 days and a 3000 psi in 60 minutes.
- Full concrete panel replacement is required when a third pothole is core drilled in the same panel. The contractor that cut the last pothole (i.e. 3rd) will be required to replace the panel.
- Any pothole in a sidewalk will require a full panel replacement.
- Any pothole in the curb and gutter or any drainage way will require at a minimum, a half panel replacement.

Delete Subsection 203.11(e) and replace with the following:

(e) Potholing. Potholing will be measured by each. All other related work, including removal of existing pavement, backfilling, shoring and labor will not be measured and paid for separately, but shall be included in the work.

Subsection 203.12 of the Standard Specifications shall be modified as follows:

Payment will be made under:

Pay Item	Pay Unit
Potholing	Each

REVISION OF SECTION 208
EROSION CONTROL

Section 208 of the Standard Construction Specifications is hereby removed in its entirety and replaced with the following:

PART I: DEFINITIONS

Definitions used for this Section shall consist of those listed in Title 1 of the City and County of Denver "Standard Specifications for Construction, General Contract Conditions", 2011 edition.

Definitions used for this Section hereby incorporate those identified within the City and County of Denver Construction Activities Stormwater Manual (CASM).

Additional Definitions applicable to this Section are listed heretofore:

Basis of Payment: The terms under which "Work" is paid, as a designated "Pay Item" in accordance with the quantity measured and the "Pay Unit."

Best Management Practices (BMPs): Schedules of activities, prohibitions of practices, installation of devices, maintenance procedures, and other management practices deployed to stabilize the construction site to prevent or reduce the pollution of State Waters (see definition below). Stormwater BMPs can be classified as "structural" (i.e., devices installed or constructed on a site) or "non-structural" (procedures, such as modified landscaping practices).

Colorado Department of Health and Environment (CDPHE): State of Colorado, Water Quality Control Division responsible for issuance of State Construction Stormwater Permit.

Construction Activities Stormwater Discharge Permit (CASDP): Permit issued by the City for compliance with City & County of Denver Revised Municipal Code and Department of Public Works Rules & Regulations concerning the discharge of pollutants in storm generated runoff from construction sites to Municipal Separate Storm Sewer System (MS4, see definition below) or State Waters, via the Municipal Separate Storm Sewer System (MS4).

Construction Activities Stormwater Manual (CASM): City and County of Denver Construction Activities Stormwater Manual (CASM), 2010 edition.

Colorado Department of Transportation (CDOT): State agency that has published standards for Erosion Control with accompanying Erosion Control Supervisor certification courses.

Erosion Control Supervisor (ECS): The Erosion Control Supervisor is assigned by the Contractor to perform duties as described in this Section. The ECS shall be properly trained in BMPs per requirements of Part V below, and shall be under the direction of a Professional Engineer licensed in the State of Colorado when performing any modifications to the Project Stormwater Management Plan (SWMP), as required by CDPHE.

Final Stabilization: Point of construction when all ground surface disturbing activities at the site have been completed and uniform vegetative cover has reached 70% of pre-disturbance vegetative cover, or equivalent permanent features have been employed. At this point, all temporary BMPs can be removed, all construction and equipment maintenance wastes have been disposed of properly; and all elements of the Stormwater Management Plan have been completed.

Major SWMP Modification: Changes to the original SWMP that removes or adds additional area to the Project, or modifies the final hydrology or drainage of the Project. A Major SWMP Modification requires the submission of revised Stormwater Management Plan (SWMP) elements to the Permit Authority for review and approval. Any adjustments to a SWMP must be performed either by or under the direction of a Professional Engineer licensed in the State of Colorado.

Minor SWMP Modification: Modification to the SWMP that does NOT increase the scope or change hydrology of the Project but: modifies/improves specific BMPs in use at site, indicates progression in phasing of the Project, or specifies relocation of previously approved BMPs within the Project. Any adjustments to a SWMP must be performed either by or under the direction of a Professional Engineer licensed in the State of Colorado.

Municipal Separate Storm Sewer System (MS4): A conveyance or system of conveyances (including roads with drainage systems, municipal streets, catch basins, curbs, gutters, ditches, man-made channels, or storm drains):

a) Owned or operated by a State, city, town, county, district, association, or other public body (created by or pursuant to State law) having jurisdiction over disposal of stormwater or other wastes, including special districts under State law such as a sewer district, flood control district or drainage district, or similar entity, or a designated and approved management agency under Section 208 of the Federal Clean Water Act that discharges to State Waters;
b) Designed or used for collecting or conveying stormwater;
c) Which is not a combined sewer; and
d) Which is not part of a Publicly Owned Treatment Works (POTW).

Permit Authority: The Department authorized by the City to review and process CASDP Applications for Capital and/ or governmental sponsored Projects. The responsible City department serving as the Permit Authority is the Public Works Project Controls Office. As a clarification, the Development Services Department of the City serves as the point of intake and permit processing center.

Permit Enforcement Authority: The Department authorized by the City to inspect and enforce CASDP Rules and Conditions for all construction Projects within the City's MS4 Boundary. The responsible City department serving as the Permit Enforcement Authority is the Wastewater Management Division of the Department of Public Works.

State Construction Stormwater Permit: Colorado Revised Statues require that all construction sites/development Projects, which, by definition, disturb one or more acres in area, shall be covered by a State issued general permit for construction activities. Information on the application requirements for the State permit can be obtained by phone at 303-692-3500; or by visiting their offices located at 4300 Cherry Creek Drive South, Denver, CO 80246 – 1530, or on the Web at: https://www.colorado.gov/pacific/cdphe/news/water-quality-permits

State Waters: Any and all surface waters which are contained in or flow in or through this State, not to include waters in sewage systems, waters in treatment works of disposal systems, waters in potable water distribution systems, and all water withdrawn for use until use and treatment have been completed.

Examples of State Waters include, but are not limited to, perennial streams, intermittent or ephemeral gulches and arroyos, ponds, lakes, reservoirs, irrigation canals or ditches, wetlands, stormwater conveyances (when they discharge to a surface water), and groundwater.

Stormwater Management Plan (SWMP): The Stormwater Management Plan contains the requirements necessary to accomplish all the following:

The SWMP establishes a minimum standard to construct, install, maintain, and remove required BMPs during the life of the Contract to prevent or minimize pollution of stormwater due to erosion, sediment transport, and construction related pollutant generated during all phases of the Project. A SWMP consists of the following elements:

(i) CASDP Narrative Worksheet with Narrative Report. The Narrative Report and supporting documents should fully address the methods to be used to prevent sediment, debris, and other pollutants from entering the MS4 and/ or State Waters in and around the Project area. Proposed structural and non-structural BMPs should be described with sufficient implementation detail to insure that the logical phases of the proposed construction Project meet the performance standards listed in the CASM.

(ii) Proposed site drawings and Best Management Practice (BMP) installation details as they apply to the site conforming to the Urban Storm Drainage Criteria Manual, Vol. 3, "Best Management Practices", most current version as issued by the Urban Drainage and Flood Control District (UDFCD), or those established by the City's Department of Public Works. If erosion control drawings were included within the bid documents for the Project, they shall be used for bid purposes and initial planning/ deployment of BMPs on the Project. If provided drawings are signed/ sealed by a Professional Engineer, they have been pre- approved by the Permit Authority and may be used without revision for purposes of submitting for CASDP. If provided drawings do not have signature/ seal of Professional Engineer licensed by the State of Colorado, they will require revision by the Contractor with Professional Engineer signature/ seal prior to submission to the City and County of Denver for CASDP.

(iii) Supporting documentation related to proposed BMPs that are not currently identified in UDFCD Vol. 3 or as otherwise published by the City.

Any preparation of or adjustments to a SWMP must be performed either by or under the supervision of a Professional Engineer or Landscape Architect, licensed in the State of Colorado. SWMP elements submitted to the City shall also meet currently established criteria of the CDPHE as the SWMP must meet all local, State and Federal requirements.

Substantial Completion of Erosion Control: Point of construction when permanent BMPs have been installed, initial growth is in place, and the site is waiting for vegetative cover to reach 70% of pre-disturbance vegetative cover.

REVISION OF SECTION 208
EROSION CONTROL

PART II: DESCRIPTION

This Work shall consist of constructing, installing, maintaining, and removing when required, BMPs during the life of the Contract until Final Stabilization to prevent or minimize erosion, sedimentation, and pollution of any waters including storm, drainage ways, MS4, State Waters, and/ or wetlands. Work under this Section includes the Contractor obtaining required Permits, utilizing SWMP elements provided in the Contract, and/ or SWMP elements specifically prepared by the Contractor as defined herein. The work shall also consist of providing on-going maintenance and monitoring of the SWMP as may be necessary due to the specific and/or dynamic needs of the Project as well as meet all requirements set forth within the CASM.

The Contractor shall coordinate the construction of temporary BMPs with the construction of permanent BMPs to assure economical, effective, and continuous erosion and sediment control and water pollution prevention throughout the construction period until Final Stabilization is achieved.

When a provision of this Section or an order by the Permit Enforcement Authority requires that an action be immediate or taken immediately, it shall be understood that the Contractor shall at once begin effecting completion of the action and pursue it to completion in a manner acceptable to the Permit Enforcement Authority, and in accordance with applicable Permitting requirements.

PART III: MATERIALS

Materials to be used for BMPs shall conform to each specific detail as set forth within the Project SWMP or as noted on the Contract Drawings.

PART IV: EROSION CONTROL PERMIT STATUS

The current SWMP status for the Project is as follows:

A SWMP is currently not required for this project as the proposed disturbed area and/ or proximity to stream does not meet the minimum criteria for requiring a CASDP. All provisions of the following Parts V-VIII of this Section are hereby deleted and shall not be made part of the Project. However, the responsibilities for minimizing sediment pollution from the Project have not been waived, and as such, the City hereby requires the Contractor to perform as specified in the following notes. Because a SWMP and CASDP are not necessary for the Project, all cost for performance of the following notes shall not be paid for separately, but shall be included in the work unless otherwise specified in the section.

"A CASDP Permit will not be required for this project, however, the Contractor and/or their authorized agents shall ensure that all potential pollutants generated during demolition, excavation, trenching, boring, grading, or other construction Work associated with this permit, be prevented from discharge to stormwater conveyance systems in the vicinity of the Project.

The Contractor and/or their authorized agents shall remove all sediment, mud, construction debris, or other potential pollutants that may have been discharged to or, accumulate in the flow lines of storm drainage appurtenances and public rights of ways of the City and County of Denver and CDOT as a result of construction activities associated with this Project. All removals shall be conducted in a timely manner.

REVISION OF SECTION 208
EROSION CONTROL

The Contractor shall be held responsible for remediation of any adverse impacts to the CCD or CDOT MS4, State Waters, waterways, wetlands, and or other public or private properties, resulting from work done as part of this Project.

The Contractor and/or their authorized agents shall insure that all loads of cut and fill material imported to or exported from the Project shall be properly covered to prevent loss of the material during transport on public rights of way." (Sec.49-552; Revised Municipal Code)

Approved erosion and sediment control 'Best Management Practices' shall be maintained and kept in good repair for the duration of the Project. All necessary maintenance and repair shall be completed immediately upon discovery of any deficiency or defect.

The Contractor and/or their authorized agents shall implement the following Best Management Practices (BMPs) on site during construction. Best Management Practice (BMP) installation details and maintenance shall conform to the Urban Storm Drainage Criteria Manual, Vol. 3, "Best Management Practices", most current version as issued by the Urban Drainage and Flood Control District (UDFCD), or those established by the City's Department of Public Works.

1. VEHICLE TRACKING CONTROL: This BMP is required at all access points for ingress/egress from off-site impervious surfaces to construction site pervious areas that are used by vehicular traffic or construction equipment.

2. INLET PROTECTION: This BMP is required on all existing or proposed storm sewer inlets in the vicinity of the construction site that may receive site runoff. The BMP must be appropriate to the type of storm inlet and appropriate for the ground surface at the inlet.

3. INTERIM SITE STABILIZATION: This BMP is required to provide a measure for preventing the discharge of sediment from construction sites where overlot grading or other site disturbance has occurred. This BMP is particularly necessary on sites where construction activities/disturbance will be limited to small areas of the Project site. Acceptable BMPs include:
   a) Preserving existing vegetation
   b) Seeding and planting
   c) Mulching
   d) Mulching and seeding
   e) Temporary/Permanent re-vegetation operations
   f) Chemical soil stabilizer application (requires WMD approval)

4. WASTE MANAGEMENT/CONTAINMENT: This BMP requires that all construction wastes, fuels, lubricants, chemical wastes, trash, sanitary wastes, contaminated soils or debris shall be contained on site, protected from contact with precipitation or surface runoff, periodically removed from the construction site, and properly disposed of.

5. SPILL PREVENTION /CONTAINMENT: This BMP defines the measures proposed for preventing, controlling, or containing spills of fuel, lubricants, or other pollutants; and protecting potential pollutants from contact with precipitation or runoff.

6. CHUTE WASHOUT CONTAINMENT: Water used in the cleaning of cement truck delivery chutes shall be discharged into a predefined, bermed containment area on the job site. The required containment area is to be bermed so that wash water is totally contained. Wash water discharged into the containment area shall be allowed to infiltrate or evaporate. Dried concrete waste shall be removed from the containment area and properly disposed of. The direct or indirect discharge of water containing waste concrete to the storm sewer system is prohibited (Sec.56-102a, c; Revised Municipal Code, City and County of Denver).

7. SWEEPING: This BMP requires that impervious surfaces which are adjacent to or contained within construction sites be swept on a daily basis or as needed during the day when sediment and other materials are tracked or discharged on to them. Either sweeping by hand or use of Street Sweepers is acceptable. Street sweepers using water while sweeping is preferred in order to minimize dust. Flushing off paved surfaces with water is prohibited.

8. PERIMETER CONTROL: This BMP requires that a construction site install a perimeter control measure along the edge of the construction Site, to prevent, or filter the discharge of surface runoff from the construction site. The type of perimeter control used shall be determined based on site conditions and location. Maintenance and repair of the control measure shall occur as needed, in a timely manner.

9. STOCK PILES: Soils that will be stockpiled for more than thirty (30) days shall be protected from wind and water erosion within fourteen (14) days of stockpile construction. Stabilization of stockpiles located within 100 feet of receiving waters, or with slopes 3 to 1 or greater shall be completed within seven (7) days following stockpile construction. Stabilization and protection of the stockpile may be accomplished by any of the following: Mulching, Temporary/Permanent Revegetation Operations, Chemical Soil Stabilizer Application (requires Denver Public Works approval), or erosion control matting/Geotextiles. If stockpiles are located within 100 feet of receiving waters, a drainage way or the site perimeter, additional sediment controls shall be required.

10. SAW CUTTING OPERATIONS: The Contractor shall protect all storm sewer facilities adjacent to any location where pavement cutting operations involving wheel cutting, saw cutting, or abrasive water jet cutting are to take place. The Contractor shall remove and properly dispose of all waste products generated by said cutting operations on a daily basis or as needed throughout the work day. The discharge of any water contaminated by waste products from cutting operations to the storm sewer system is prohibited. (Sec.56-102a, c; Revised Municipal Code, City and County of Denver)

REVISION OF SECTION 208
EROSION CONTROL

PART V: CONSTRUCTION REQUIREMENTS

A) SCHEDULES:
At least 10 working days prior to the beginning of any construction work, the Contractor shall submit for approval a schedule for accomplishment of temporary and permanent BMPs shown in the SWMP. This schedule shall specifically indicate the sequence of clearing and grubbing, earthwork operations, and construction of temporary and permanent BMPs. The schedule shall include BMPs for all areas within the Project boundaries, including but not limited to, haul roads, borrow pits, and storage and other staging sites. Work shall not be started until the BMP schedule has been approved in writing by the Project Manager, and on site pre-construction inspection is performed and approved by CCD's NPDES inspector. Once the work has started, and during the active construction period, the Contractor shall update the schedule for all BMPs on a regular basis, and as required to keep the SWMP in compliance.

B) CONSTRUCTION IMPLEMENTATION:
The Contractor shall incorporate into the Project all BMPs that are appropriate for the current phase of work, as outlined in the accepted schedule.

C) UNFORSEEN CONDITIONS: The Contractor shall direct the ECS (under the supervision of a Professional Engineer licensed in the State of Colorado) to design and implement BMPs for correcting conditions unforeseen during design of the Project, or as possible for emergency situations, which arise during construction. The Project's SWMP, UDFCD Vol 3 standards and details, and CDOTs "Erosion Control and Storm-Water Quality Guide," and any approved modification to these documents as proposed by the Contractor, shall be used as reference documents for the purpose of designing appropriate BMPs. Measures and methods proposed by the Contractor to deal with unforeseen conditions shall be reviewed and approved in writing by the Permit Enforcement Authority and the Project Manager prior to implementation and construction.

In an emergency situation, the Contractor shall use best judgment for immediately responding to the emergency situation as it arises, and shall notify the Permit Enforcement Authority and ECS of the emergency situation and BMPs employed in response as soon as practical after installation.

D) PERMITS:
The Contractor shall obtain all required permits for the Project including those required by federal, state, and local agencies. The Contractor shall obtain (or transfer from the City when specified) required erosion control and water quality permits and shall be responsible for compliance with all requirements under any such permits.

E) EROSION CONTROL SUPERVISOR:
Contractor shall assign to the Project an employee or subcontractor to serve as Erosion Control Supervisor (ECS). The ECS shall be a person other than the Contractor's superintendent, foreman or equivalent supervisory position. The ECS shall be experienced in aspects of BMP construction and have satisfactorily completed a Colorado DOT or equivalent ECS training program authorized by the City. Proof that this requirement has been met shall be submitted to the Project Manager at least ten working days prior to the beginning of any soil disturbance work. A list of authorized ECS training programs is available from the City upon request. Additionally, per definition, the ECS shall be under the direction of a Professional Engineer licensed in the State of Colorado when performing any modifications to the Project Stormwater Management Plan (SWMP).

-8-

REVISION OF SECTION 208
EROSION CONTROL

The ECS shall be responsible for oversight of the implementation, maintenance, and revision of the SWMP for the duration of the Project. CCD requires the ECS to fulfill responsibilities as outlined by CDPS such as having financial control and authority to implement BMPs. The ECS's responsibilities shall be as follows:

1) Ensure compliance with all water quality permits or certifications in effect during the construction work.
2) Supervise the installation, construction, and maintenance of all BMPs specified in the Contract and coordinate the construction of BMPs with all other construction operations.
3) Direct the implementation of suitable BMPs as necessary to correct unforeseen conditions or emergency situations. Direct the dismantling of those features when their purpose has been fulfilled due to completion of each Project phase unless the Permit Enforcement Authority agrees that the features be left in place.
4) Attend the preconstruction conference, erosion control preconstruction inspection, Project scheduling meetings, weekly construction/ field meetings, substantial completion and final stabilization inspections, and other meetings regarding construction that could impact water quality.
5) Evaluate all non-stormwater coming onto the site, such as springs, seeps, and landscape irrigation return flow. If such flow is identified, the ECS shall propose appropriate SWMP modifications to the Contractor to protect off-site water from becoming contaminated with sediment or other pollutants.
6) Coordinate with the Contractor to implement necessary actions to reduce anticipated or presently existing water quality or erosion problems resulting from construction activities.
7) Coordinate with the Contractor to ensure all labor, material, and equipment deployed to meet SWMP requirements is judged appropriately.
8) During construction, update and record the following items in the SWMP as changes occur:
   (i) Construction boundaries (may require Major SWMP Modification)
   (ii) Areas of disturbance (may require Major SWMP Modification)
   (iii) Areas used for storage of construction materials, equipment, soils, or wastes.
   (iv) Location of any dedicated asphalt or concrete batch plants.
   (v) Location of construction offices and staging areas.
   (vi) Location of work access routes during construction.
   (vii) Location of borrow and waste.
   (viii) Location of temporary and permanent stabilization

The ECS shall start a new site map before the current one becomes illegible. All site maps shall remain with the SWMP paperwork.

9) Amend the SWMP whenever there are: additions, deletions, or changes in locations of BMPs. SWMP revisions shall be recorded immediately. Items shall be dated and signed at time of occurrence. Specifically, amendments shall include the following:
   (i) A change in design, construction, operation, or maintenance of the site which would require the implementation of new or revised BMPs; or
   (ii) Changes when the SWMP proves to be ineffective in achieving the general objectives of controlling pollutants in stormwater discharges associated with construction activity.
   (iii) Changes when temporary BMPs are no longer necessary from changes in Project phase and are removed. All inspection and maintenance activities or other repairs shall be documented.

All inspection and maintenance activities or other repairs shall be documented. The SWMP and documentation shall be kept on the Project site at all times.

10) Modify the site map with arrows to indicate direction of surface and storm water flowing across the Project site.
11) When adding or revising BMPs in the SWMP, amend the narrative to explain what, when, where, why, and how the BMP is being used, and add a detail to the SWMP.
12) If using existing topography, vegetation, etc. as a BMP, label it as such in the SWMP site map; amend the Narrative to explain when, why, and how the BMP is being used in the SWMP.
13) Record on the SWMP, and implement the approved plan for concrete and asphalt saw cutting, grinding, and milling containment and removal.
14) Update the potential pollutants list in the SWMP throughout construction meeting CASDP requirements.
15) Spills, leaks, or overflows that result in the discharge of pollutants shall be documented on the inspection form. The ECS shall record the time and date, weather conditions, reasons for spill, and how it was remediated. The ECS shall immediately report to the Contractor and Project Manager the following instances of noncompliance:
    (i) Noncompliance which may endanger health or environment.
    (ii) Spills or discharge of hazardous substance or oil which may cause pollution of the City MS4 or State Waters.
    (iii) Discharge of stormwater which may cause an exceedance of a water quality standard.
    16) Perform a thorough inspection of the stormwater management system at least every seven (7) days and within 24 hours after any precipitation or snowmelt event with the potential to cause surface erosion. If no land disturbing construction activities are present during a storm event, post-storm event inspections shall be conducted prior to commencing any new land disturbing construction activities, but no later than seventy-two (72) hours following the storm event. The inspection records shall be kept on-site in a written or previously approved format. Inspections shall be conducted during the progress of the work, during work suspensions, or until Final Stabilization of all disturbed areas is approved by Permit Enforcement Authority and shall include the following services at a minimum:
    (i) The construction site perimeter, disturbed areas, and areas used for material storage that are exposed to precipitation shall be inspected for evidence of, or the potential for, pollutants entering the drainage system. BMPs identified in the SWMP shall be observed to ensure that they are operating correctly.
    (ii) The description of potential pollutant sources, and the BMPs identified in the SWMP, shall be revised and modified as appropriate based on the results of the inspection as soon as practicable after such inspection. Modification to the SWMP shall be implemented in a timely manner and in accordance with applicable Permit requirements.
    (iii) The operator shall keep a record of inspections. Uncontrolled releases of sediment or polluted storm water or measurable quantities of sediment found off the site shall be recorded with a brief explanation as to the measures taken to prevent future releases as well as any measures taken to clean up the sediment that has left the site. Inspection records shall be made available to the City upon request. Note: documentation of uncontrolled releases at site DOES NOT alleviate any State or Federal requirements for reporting of discharges or upset conditions. Care shall be taken to ensure compliance with all regulatory requirements at site.

(iv) Seven (7) day inspections are required during construction and at all times until Final Stabilization has been achieved. Seeding and mulching of disturbed areas does NOT count as final stabilization until such time as 70% pre disturbed vegetative cover has been achieved. Sites with growth in place sufficient to deter erosion that have not yet achieved final stabilization may petition the City to grant an alternative inspection schedule while awaiting additional growth for final stabilization. These inspections must be conducted in accordance with the above paragraphs.

F) APPLYING BMPs TO STABILIZE SITE:
The duration of the exposure of incomplete construction to the effects of weather shall be as short as practicable. BMPs such as: seeding, surface roughening, mulching, applying tackifier, use of geotextiles and matting, permanent landscaping, or other selected BMPs shall be applied within fourteen (14) calendar days of completion of grading/soil disturbance activities to stabilize the construction site unless disturbed area is within 100 feet of an MS4 or State Waters or has slopes of 3 to 1 or greater in which case BMPs shall be implemented within seven (7) calendar days of completion of grading activities. Disturbed areas where work is temporarily halted shall be temporarily stabilized within seven (7) days after the activity ceased unless work is to be resumed within thirty (30) calendar days after the activity ceased.

Clearing and grubbing operations shall be scheduled and performed to minimize both the area of the Project disturbed at a given time and the amount of time that disturbed areas remain open. BMPs such as temporary seeding are required between successive construction stages when disturbed areas will not be stable or active for thirty (30) calendar days or more. No payment will be made for additional work required because the Contractor has failed to properly coordinate the BMP schedule, thus causing previously stabilized areas to be disturbed by operations that could have been performed prior to the stabilization. Upon failure of the Contractor to coordinate the permanent BMPs with the grading operations in a manner to effectively control erosion and prevent water pollution, the Permit Enforcement Authority can suspend the Contractor's grading operations and the Project Manager can withhold monies due to the Contractor on current estimates until such time that all aspects of the work are coordinated in an acceptable manner.

G) WORK OUTSIDE LIMITS OF CONSTRUCTION: Non-contiguous areas outside the limits of construction that are used by the Contractor that include, but are not limited to, borrow pits, haul routes, storage and disposal areas, field offices, maintenance, batching areas, etc., shall have appropriate BMPs implemented by the Contractor at the Contractor's expense. Should said areas meet applicable CASDP Permit criteria, the Contractor shall obtain a separate CASDP or amend existing CASDP for each area as applicable at no additional expense to the City.

H) MAINTENANCE: The Contractor shall continuously maintain erosion and sediment control BMPs on a daily basis or as directed by the ECS so that they function properly during and after construction (including work suspensions) until Final Stabilization has been approved by the Permit Enforcement Authority. Maintenance includes, but is not limited to, the following items:

(i) From the time seeding and mulching work begins until the date the Project has reached Substantial Completion of Erosion Control, the Contractor shall keep all seeded areas stabilized at all times. Any damage to seeded areas or to mulch materials shall be promptly repaired.

(ii) All inspection sediment removal, and BMP maintenance activities to comply with all Federal, State & Local erosion control permit requirements until Final Stabilization is reached.

(iii) All removal and replacement of existing BMPs due to damage to same suffered either by the contractor, outside agencies, the public, or acts of God.
(iv) All required mechanical and/ or manual street sweeping.
(v) Discretionary changes required of any regulatory enforcement officer.

If the Contractor fails to maintain the BMPs in accordance with the Contract, or as directed, the City may at the expiration of a period of 48 hours, after having given the Contractor written notice, proceed to maintain BMPs as deemed necessary. The cost thereof will be deducted from any compensation due, or which may become due to the Contractor under this Contract.

I) MINOR SWMP MODIFICATIONS: Shall be made in the field by the Contractor and thoroughly documented in the Contractor's SWMP narrative and drawings. Should the Permit Enforcement Authority deem minor field modifications inadequate, the Contractor may be required to a) make specific modifications as requested by the Permit Enforcement Authority or b) return to the original approved design specifications. Minor SWMP Modifications are allowed, covered under the original CASDP, and required as part of standard maintenance and operation.

J) MAJOR SWMP MODIFICATION: The City reserves the right to require changes in the Work or Project Limits that may require a Major Modification to the SWMP and/ or CASDP due to unforeseen circumstances. Should this occur, the Contractor will be responsible for the following (as applicable) and applying for CASDP amendment:
(i) Make required revisions to comply with changing Federal or State rulemaking if it occurs within timeframe of the Project
(ii) Make required revisions due to unforeseen or unplanned conditions leading to deficient Drawings/ SWMP (hazardous materials encountered, landfills, expansion of work limits, etc.)
(iii) Prepare revised SWMP elements endorsed by a Professional Engineer licensed in the State of Colorado.

K) SUBSTANTIAL COMPLETION OF EROSION CONTROL: When a CASDP is required for the Project, Substantial Completion of the Project as defined by the City and County of Denver General Contract Conditions cannot be reached until Substantial Completion of Erosion Control has been granted. Granting of Substantial Completion of Erosion Control must be requested by the Contractor and be approved by the Permit Enforcement Authority in the form of a "Certificate of Substantial Completion of Erosion Control".

L) FINAL STABILIZATION: Granting of Final Stabilization must be requested by the Contractor and be approved by the Permit Enforcement Authority. Other permanent soil stabilization techniques may be proposed, in writing, by the Contractor and used upon approval, in writing, by the Project Manager and Permit Enforcement Authority.

The Contractor shall follow the following procedures for approval of Final Stabilization:
(i) The Contractor shall file Inactivation Request for Construction Activities Stormwater Discharge Permit (available within CASDP guidance documents) with the Permit Enforcement Authority.
(ii) The Contractor shall coordinate with the Permit Enforcement Authority to hold a Final Inactivation Inspection.
(iii) If passing, the Permit Enforcement Authority transmits a letter of approval for Final Stabilization.

(iv) If not passing, the Permit Enforcement Authority transmits a letter of denial for Final Stabilization with associated inspection report to Contractor.

(v) Stabilization, inspection and maintenance requirements shall continue until confirmation of having met final closure requirements have been granted in writing by the Permit Enforcement Authority.
When Final Stabilization has been reached, the Permit Enforcement Authority shall issue a "Certificate of Final Stabilization".

(vi) Once the Inactivation request is approved by the City and County of Denver, the contractor can apply to close the State Stormwater Permit.

M) FINAL ACCEPTANCE:
CASDP obligations (including reaching Final Stabilization) may hinder the ability to reach Final Acceptance for the overall Project as defined in the City General Contract Conditions.

PART VI: CONSTRUCTION OF BMPs

BMPs shall be constructed so that they conform to all requirements as set forth within the Project SWMP. They shall meet all requirements set forth within each BMP detail and shall be installed and maintained so that they function in an effective and operable manner.

PART V: BASIS OF PAYMENT

Because a SWMP and CASDP are not necessary for the Project, all cost for performance of the Work to furnish, install, maintain, replace (if not due to contractor negligence), remove, and dispose of BMPs specified in the Contract shall not be paid for separately, but shall be included in the work. Only Storm Drainage Inlet Protection will be measured and pay for separately in accordance with Section 608 of the Storm Drain Inlet Protection of this specification.

All other work required as set forth in this Revised Section 208 –Erosion Control including all materials, equipment and labor, to permit, set-up, maintain, document, remove and clean-up all erosion control BMP's as per current City of Denver Stormwater Management Plans /(SWMP) requirements will not be paid separately; all costs incurred by the Contractor to meet the requirements of this Section regarding Erosion Control unless provide for in the Bid shall be included in the related appurtenance.

The cost for any corrective actions required by the State or City due to contractor's failure to obtain or comply with applicable Permits will be borne by the Contractor, including fines and penalties. In the case of failures on the part of the Contractor in controlling erosion, sedimentation, and/or water pollution, the City may provide the necessary corrective actions. All corrective action costs, including Project engineering costs, will be charged to the Contractor, and appropriate deduction will be made from the Contractor's monthly pay estimate.

The sole remedy for additional costs associated with installation of BMPs as required by regulatory agencies to ensure compliance with local and State requirements shall be included in the cost of the adjacent concrete repair work as provided in the Bid Schedule of this Contract. The Contractor however may submit a separate itemized Change Order for any required Major SWMP Modification proposed by the City during the course of the Project.

REVISION OF SECTION 208
EROSION CONTROL

Section 208 of the Standard Specifications is hereby revised for this project as follows:

Subsection 208.05(j) Construction of BMPs shall include the following:

Storm drainage inlet protection shall be placed at the nearest downstream inlet or any inlets immediately adjacent to any construction excavation or areas that require concrete work. The inlet protection shall be sewn geotextile fabric unit enclosing a porous structure in the form of a cylindrical tube placed in front of and extending beyond the inlet opening on both sides. The inlet protection shall be a Beaver Dam style as manufactured by Dandy Products Inc. (1-800-591-2284) (www.dandyproducts.com) or approved equal.

Storm Drain protection shall remain in place throughout the entire project time to ensure protection of each individual construction site.

The Contractor shall review the sites which have completed construction to ensure that the inlet protection is achieving the proper protection and remediate all issues for the entire project time.

Subsection 208.12 shall include the following:

Payment will be full compensation for all work, materials and equipment required to complete the item, including surface preparation, maintenance throughout the project, and removal upon completion of the project.

Pay Item	Pay Unit
Storm Drain Inlet Protection	Each

SECTION 212 SEEDING, FERTILIZER, SOIL CONDITIONER, AND SODDING

Section 212 of the Standard Specifications is hereby revised for this project as follows:

Subsection 212.01 shall include the following:

Disturbance of existing landscaping shall be minimized wherever possible. The Contractor shall notify the Engineer or Project Manager of any potential disturbance before beginning of signal work.

Landscape restoration shall consist of the repair and/or replacement of all landscape materials that may be damaged through the actions of the Contractor or his agents. This work may include but is not limited to sod, fencing, plantings, sprinkler systems and decorative features.

Subsection 212.07 shall include the following:

Landscape Restoration will be measured by actual number of square feet restored and accepted by the Engineer.

Subsection 212.08 shall include the following:

Pay Item	Pay Unit
Landscape Restoration	Square Foot

REVISION OF SECTION 608
SIDEWALKS AND BIKEWAYS

Section 608 of the Standard Specifications shall be deleted in its entirety and replaced with the following:

Section 608.01 shall include the following:

This work shall consist of the removal and replacement of concrete sidewalks in accordance with these specifications and in conformity with locations shown on the plans or as specified by the Engineer or Engineer's designee in the field.

Section 608.02 shall include the following:

Materials shall meet the requirements specified in the following subsections:

Joint Fillers: 705.01

Concrete for sidewalks or curb ramps shall be Class "P" with an air entrainment of 5-8% to address freeze thaw expansion/contraction. Concrete sidewalks shall have a broom finish with natural color as specified in subsections 601.02 and 601.03, except that No. 67 coarse aggregate shall be used.

Detectable warnings on curb ramps shall be Armor-Tile Tactile Systems or approved equal.

Concrete shall be cured with a non-pigmented "clear" curing compound.

Concrete will be subject to inspection and tests as required to assure compliance with quality requirements.

The use of calcium chloride is prohibited.

Section 608.03 shall include the following:

(a) *Excavation.* Excavation shall be made to the required depth and to a width that will permit the installation and bracing of the forms. The foundation shall be shaped and compacted to a firm even surface conforming to the section shown on the plans or as staked in the field. Where excavation to the finished grade elevation results in sub-grade of unsuitable soil, the Engineer or Engineer's designee may designate the unsuitable material to be removed and replaced with approved material. The removal of unsuitable material and backfill with Class 6 Aggregate Base Course, or other material approved by the Engineer or Engineer's designee, shall not be measured or paid for separately but included in the cost of sidewalk.

(b) *Forms.* Forms shall be of wood, metal, or other suitable material, and shall extend for the full depth of the concrete. All forms shall be straight, free from warp and of sufficient strength to resist the pressure of the concrete without springing. Bracing and staking of forms shall be such that the forms remain in both horizontal and vertical alignment until their removal. A satisfactory slip-form method may be used.

(c) *Placing Concrete.* The foundation shall be thoroughly moistened immediately prior to the placing of the concrete. The proportioning, mixing and placing of the concrete shall be in accordance with the requirements for the class of concrete specified.

(d) *Finishing.* Finishing shall occur only after the disappearance of bleed water. The addition of superficial water to the surface of concrete to assist in finishing operations will not be permitted. Sprinkling of pigment onto the fresh surface will not be permitted.

All outside edges of the slab and all joints shall be edged with a 6 mm (¼ inch) radius edging tool.

(e) *Joints.* Expansion joints, at intervals of not more than 150 m (500 feet), shall be filled with 13 mm (½ inch) thick full depth, preformed expansion joint filler. The sidewalk shall be divided into sections by dummy joints formed be a jointing tool or other acceptable means as directed. These dummy joints shall extend into the concrete for at least ¼ of the depth and shall be approximately 3 mm (1/8 inch) wide. Dummy joints shall be spaced at intervals approximately equal to the width of the sidewalk. Construction joints shall be formed around all appurtenances such as manholes, utility poles, etc., extending into and through the sidewalk. Preformed expansion joint filler 13 mm (½ inch) thick shall be installed in these joints. Expansion joint filler 13 mm (½ inch) thick or the thickness indicated shall be installed between new concrete and any fixed structure such as a building or bridge. This expansion joint material shall extend for the full depth for the contact surface.

(f) *Curing.* Immediately upon completion of the finishing, sidewalks shall be moistened and kept moist for three days, or they shall be cured by the use of membrane forming curing compound. The method and details of curing shall be subject to the approval of the Engineer or Engineer's designee.

During the curing period all traffic, both pedestrian and vehicular, will be excluded. Vehicular traffic will be excluded for such additional time as the Engineer or Engineer's designee may direct.

The contractor shall insure that new concrete items built under this contract drain properly and, as such, there are no areas of standing water on the new concrete items.

The Contractor shall protect all new concrete items built under this Contract against defacement, or other injury, from any cause. If said damage cannot be adequately repaired to the satisfaction of the Engineer or Engineer's designee, the Contractor shall remove and replace the unacceptable items at Contractor's expense.

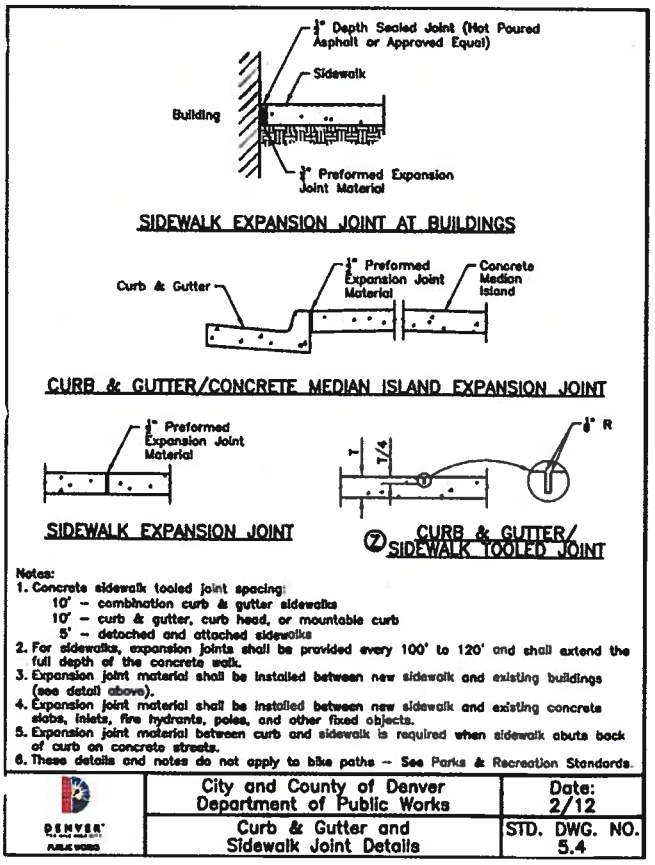

REVISION OF SECTION 608
SIDEWALKS AND BIKEWAYS

Section 608.05 shall include the following:

Concrete sidewalks and curb ramps will be measured by the square yard of finished surface.

Saw cutting & removal of existing sidewalk panels, curb ramps, excavation to the proposed sub-grade elevation and backfilling will not be measured or paid for separately but shall be included in the concrete installation.

Section 608.06 shall include the following:

The accepted quantities will be paid for at the contract until price for each of the pay items listed below that appear in the bid schedule, including expansion joint material. Sidewalk and Curb ramp replacement will both be paid for as Concrete Sidewalk.

Any and all concrete sidewalk areas to be removed that have a "brick" type or other pattern shall be replaced and stamped with the same pattern and/or color of concrete. Such work shall be paid as Concrete Sidewalk (Special).

Payment will be made under:

Pay Item	Pay Unit
Concrete Sidewalk	Square Feet
Concrete Sidewalk (Special)	Square Feet

Note: For purposes of measurement, the average thickness of concrete replacement shall be assumed to be 8 inches. The actual thickness of concrete required shall match the depth of the adjacent existing concrete, but shall be no less than 6 inches.

REVISION OF SECTION 613 - LIGHTING

ELECTRICAL CONDUCTOR IDENTIFICATION

Section 613 of the Standard Specifications is hereby revised for this project as follows:

Subsection 613.08 shall include the following:

All electrical conductors shall be tagged as follows:

Electrical conductor cable tags shall be located below the termination in the base of the streetlight, in the pull box, in the pedestal, and at the point of termination to existing facilities of the Local Utility Company supplying electrical service. The tags shall be attached with a cable tie. The information written on the tag shall include the direction and approximate length of cable, feeds running from where and to, etc.

Each incoming conductor shall be individually color coded with one (1) tape mark, while outgoing conductors shall have two (2) tape marks.

Example:

FEEDS TO PULL BOX 50' NORTH & 75' WEST THEN TO HIGHWAY SIGN	FEEDS FROM XFMR 250' SOUTH & EAST 200' WEST

Uniform tags are available in a Tag Kit. *The Tag Kit consists of: 100 tags, 3-part yellow with 1 hole, 100 black nylon ties and 1 black Sharpie pen.

Manufacturers	Catalog Numbers
Uticom Systems Inc. Or approved equal	U5025Y1

Subsection 613.12 shall include the following:

Electrical conductor tagging will not be paid for separately, but shall be included in the cost of wiring.

REVISION OF SECTION 613 - LIGHTING

ELECTRICAL CONDUIT PULL TAPE (MULE TAPE)

Section 613 of the Standard Specifications is hereby revised for this project as follows:

Subsection 613.08 shall include the following:

Each new conduit shall be equipped with a pull tape (mule tape). The pull tape shall be designed and manufactured such that prevents cutting or burning into the conduit during cable installation.

Material

The pull tape shall have clearly printed sequential footage and shall be:

1. Manufactured from a flat, woven polyester material of low elongation
2. Lubricated to reduce friction
3. Light enough to be blown into conduit or inner duct

Strand rope will not be acceptable.

Size and Strength

The pull tape shall have a minimum width of 3/4 inch and a minimum average tensile strength of 2500 pounds. No knots are allowed.

Subsection 613.12 shall include the following:

Electrical conductor pull tape in new conduit will not be paid for separately, but shall be included in the cost of conduits.

REVISION OF SECTION 613 - LIGHTING

ELECTRICAL CONDUIT – GENERAL

Section 613 of the Standard Specifications is hereby revised for this project as follows:

Subsection 613.01 shall include the following:

This work includes furnishing and installing electrical conduit for use with and without fiber optic, other signal cables, or traffic signal installation. All materials furnished, assembled, fabricated, or installed under this item shall be new, corrosion resistant and in strict accordance with the details and these Special Provisions.

Subsection 613.02 shall include the following:

All conduits shall be fully compatible with fiber optic cable. Plastic conduit shall be Schedule 80 in the diameters shown on the plans and shall be compliant with Bellcore TW-NWT-000356 requirements.

Plastic PVC conduit shall be certified by the manufacturer as meeting ANSI/UL 6 and 651. The manufacturer shall be ISO 9000 compliant.

Each conduit shall be equipped with a pull tape (mule tape) and each bore shall have a copper tracer wire of at least 12 gauge. The pull tape shall conform to the City and County of Denver's specification as state in Revision of Section 613 – Electrical Conduit Pull Tape (Mule Tape).

Add the following to subsection 613.07:

Directional boring is the preferred method of conduit installation. Electrical Conduit (Trenched) applies to conduits that require installation by means of trenching (open excavation). Electrical Conduit (Bored) applies to conduit installed using directional boring or jacking technology. Open trenching will not be allowed except as identified in the plans or as directed by the Engineer.

All conduit bends, including factory-installed bends, shall not have a bend radius less than six times the inside diameter of the conduit.

Any excavations required for the installation of conduit or cable shall be performed in such a manner as to avoid unnecessary damage to streets, sidewalks, landscaping, sprinkler systems and other improvements. Trenches shall not be excavated wider than necessary for the installation of the electrical appurtenances. Excavation shall not be performed until immediately before installation of conduits. The material from the excavation shall be placed in a position not to cause damage or obstruction to vehicular or pedestrian traffic or interfere with surface drainage.

All surface materials including sprinkler systems, landscaping, shrubs, sod grass, and native growth vegetation which is disturbed by trenching and back-filling operation shall be restored in kind equal to or exceeding the original conditions.

All conduit runs that will not have a copper conductor installed shall have a #12 AWG stranded copper conductor placed inside for locating purposes. Locating conductor and tape will not be measured and paid separately, but shall be included in the unit price for conduit.

Conduit shall always enter a pull box, hand-hole, manhole or any other type structure from the direction of the run only.

Conduit plugs for sealing conduit shall also be supplied and installed in all open conduit ends as soon as the conduit is installed. Plugs shall be durable, fabricated from no metallic parts, be of the split design to allow removal and reinstallation around in-place cables and be easily removable and reusable. Plugs shall be capable of being installed by hand without any tools, and shall provide a water/air tight seals of at least 100 psi and shall cause no damage to the cable when installed.

If the contractor is unable to jack or bore the conduit at the lengths shown on the plans from pull box or manhole to pull box or manhole, all splice couplings and associated work to splice the conduit shall be included in the cost of this item. This shall include excavation down to the required depth of conduit at the splice location. Also included in the cost of this item are all landscape repairs, which will be required after excavation of conduit at all splice locations. All splice couplings shall be water and air tight and installed at a depth to match the remaining run of conduit. No elevation difference will be allowed. Splices shall be kept to a minimum and all locations shall be approved by the City. Additional pull boxes or manholes shall not be substituted for splices.

At some locations (as illustrated on the Plans or in these specifications, or as directed by the Engineer), new conduits shall be installed in an existing pull box or manhole. At these locations, the Contractor shall carefully excavate around the pull box or manhole and install the new conduit in the pull box or manhole in a manner that meets the requirements of this Special Provision. The Contractor shall not damage the existing pull box or manhole. If the existing pull boxes, manholes or concrete collars are cracked or damaged during conduit installation, the Contractor shall be required to replace either or both conforming to the requirements of the contract at no additional cost.

At locations that require conduit to be installed above ground, such as connections to surface mounted pull boxes, Liquid-tight Flexible Metal Conduit (LFMC) shall be provided with appropriate fittings and connection hardware. Such conduit shall have a galvanized, high-tensile strength, flexible steel strip inner core (helically wound with sealing cord), and the outer core shall be a UV resistant, liquid-tight smooth PVC sheath that is "keyed" into the inner steel core.

Subsection 613.11 shall include the following:

Electrical Conduit will be measured by the linear feet of conduit installed in accordance with these Special Provisions and Project Standards or as directed by the Engineer. Electrical Conduit will include groundwork, sweeps, pull tape, copper tracer wire, adapters, fittings, splice couplings, conduit plugs (for conduits both with and without fiber optic cable), equipment, labor, and all other items necessary to complete the work.

Boring Pits will be measured by each location as needed in accordance with these Special Provisions and Project Standards or as directed by the Engineer. There are two measurable sizes: Small 3' x 3' x 3' and Large 5' x 5' x 6'.

Subsection 613.12 shall include the following:

Pay Item	Pay Unit
Boring Pit – Small (3'x3'x3')	Each
Boring Pit – Large (5'x5'x6')	Each
2" Electrical Conduit (Bored)	Lineal Foot
3" Electrical Conduit (Trench)	Lineal Foot
3" Electrical Conduit (Bored)	Linear Feet
3" Electrical Conduit (Trenched)	Linear Feet
4" Electrical Conduit (Bored)	Linear Feet
6" Electrical Conduit (Bored)	Linear Feet

Two 3" Electrical Conduit (Bored)	Linear Feet
Three 3" Electrical Conduit (Bored)	Linear Feet
One 2" and Two 3" Electrical Conduit (Bored)	Linear Feet
Copper Tracer Wire	Linear Feet
Install Pull Tape in Existing Conduit	
Linear Feet	

REVISION OF SECTION 613 – LIGHTING
PULL BOXES/MANHOLES – GENERAL

Section 613 of the Standard Specifications is hereby revised for this project as follows:

Subsection 613.01 shall include the following:

This work shall consist of installation of one or more pull boxes or manholes of the size and type as indicated in the following section. Pull boxes (Type A and B and Type D) shall be furnished by the City and County of Denver and installed by the Contractor. Pull boxes (Type C) shall be furnished and installed by the Contractor. Manhole (Type A) shall be furnished by the City and County of Denver and installed by the Contractor. This work also includes the removal and replacement of existing pull boxes and manholes. All work shall be at locations as specified on the plans and/or as directed by the Engineer.

Subsection 613.07 shall include the following:

All traffic signal pull boxes, except surface mounted ones, shall be made of fiberglass reinforced polymer concrete and shall be designed to support a minimum service load of 15,000 pounds over a 10" x 10" square. Pull boxes shall be of the type specified in the plans. The pull box shall have a detachable cover that has a skid-resistant surface. Pull box size and general use are as follows:

Electric pull boxes, or Pull Box (Type A) (Electric), shall have the words "ELECTRIC" physically impressed on their top. The pull box shall have minimum inside dimensions of 23.25" long by 13.75" wide by 12" deep.

Pull boxes that are installed to house traffic signal cables, Pull Box (Type B) (Traffic), shall have the words "TRAFFIC" physically impressed (not painted) on its top. The traffic pull boxes shall have minimum inside dimensions of 30.5" long by 17.5" wide by 24" deep.

Pull boxes that are installed to house communication cables, Pull Box (Special)(Type B and C), shall have the words "TRAFFIC COMM" physically impressed (not painted) on its top. The Type B interconnect pull boxes or Pull Box (Special)(Type B) shall have minimum inside dimensions of 30.5" long by 17.5" wide by 24" deep. The Type C interconnect pull boxes Pull Box (Special)(Type C) shall have a minimum inside dimension of 34.25" long by 22.25" wide by 24" deep. The Type D interconnect pull boxes or Pull Box (Special)(Type D) shall have a minimum inside dimension of 28.25" long by 46.25" wide by 18" deep. The Type A manhole Manhole (Special)(Type A) shall have an outside dimension of 6' long by 6' wide by 6' deep. The covers shall be attached to the pull box body by screw-in bolts and shall have two lift slots to aid in the removal of the lid.

All concrete collars, footings, and location marker supports shall be Portland Cement Concrete Class B and shall be in accordance with Section 601.

Pull boxes that are to be in traveled ways shall be outfitted with traffic bearing lids rated for HS 20-44 loads. The pull boxes shall have a special concrete footing extending 8 inches around the outside and 6 inches around the inside of the pull box bottom, as shown in the plans. Pull boxes installed in dirt or landscape areas shall have a 12 inch wide by 6 inch thick concrete collar placed around the top in lieu of the concrete footing, as shown in the plans.

Pull Box (Surface Mounted) shall be metal type with a hinged front door and have at least a NEMA 3R rating. The hinged door shall be provided with both a weather tight seal and a key lock mechanism. Surface mounted pull boxes shall be of the dimensions shown in the plans, and shall be mounted on or embedded into hard surfaces such as bridge decks, concrete barriers, retaining walls,

or buildings, as shown on the plans. Surface mounted pull boxes shall be attached using 3/8-inch epoxy anchors or other methods, as approved by the Engineer. Surface mounted pull boxes shall not be used for ground installations.

When the plans call for a fiber optic cable location marker to be installed at the pull box or manhole location, the concrete foundation support for the location marker shall be placed monolithically with the concrete collar.

At some intersections, existing pull boxes, manholes and conduits may need to be modified to accommodate minimum bend requirements of interconnect cable and/or splice closures. At the direction of the Engineer, the Contractor shall remove existing pull boxes or manholes and replace with a pull box or manhole large enough to meet the interconnect manufacturer's recommended minimum bend radius or the splice closure requirements. Replacement of pull boxes or manholes to accommodate these requirements will be measured as each and paid for as either Pull Box (Special)(Type C), Pull Box (Special)(Type B)(Install Only), Pull Box (Type A)(Electric)(Install Only), Pull Box (Type B)(Traffic)(Install Only), Pull Box (Special)(Type D)(Install Only) or Manhole (Special)(Type A)(Install Only).

The covers shall be attached to the pull box body or the manhole body by screw-in bolts and shall have two lift slots to aid in the removal of the lid.

Any surface mounted pull boxes shall be aluminum NEMA type enclosures, and are intended for above ground applications only. Enclosures shall be watertight with a lockable door (Type 4 or better rating) with minimum dimensions of 20" long by 16" high by 8 inches deep. Connection between surface mounted pull boxes and nearest communication pull boxes shall be by means of Liquid-tight Flexible Metal Conduit (LFMC).

Subsection 613.11 shall include the following:

All pull box or manhole installation shall include the removal of any existing pull box or manhole, installation of the new pull box or manhole, modification of conduit ends, restoration of disturbed surface materials, and all other work necessary to complete the installation. Pull boxes or manholes furnished and installed by the Contractor or furnished by the City and County of Denver and installed by the Contractor shall be measured and paid on the basis of the number of boxes or manholes installed as specified in the plans or as directed by the Engineer. The contract unit price for each pull box or manhole shall be full compensation for all work described above, specified in the plans and complete and in place.

Subsection 613.12 shall include the following:

Pay Item	Pay Unit
Pull Box (Special)(Type C)	Each
Pull Box (Special)(Type B)(Install Only)	Each
Pull Box (Type A)(Electric)(Install Only)	Each
Pull Box (Type B)(Traffic)(Install Only)	Each
Pull Box (Special)(Type D)(Install Only)	Each
Manhole (Special)(Type A)(Install Only)	Each

REVISION OF SECTION 614
FIBER OPTIC CABLE – REPAIR

Section 614 of the Standard Specifications is hereby revised for this project as follows:

Subsection 614.01 shall include the following:

This work is for repairing of fiber optic communications cable as specified in the plans or as directed by the Engineer.

Subsection 614.10 shall include the following:

Repair of Fiber Optic Cable cuts or breaks shall be spliced and re-terminated in accordance with the manufacturer's recommendation or a method as approved by Engineer. The Contractor must possess a mobile fiber optic splice trailers with fusion splicing, and the repaired Fiber Optic Cable tested with an OTDR testing equipment. All repairs must be performed by a licensed skilled technician capable of restoring cut or broken Fiber Optic Cable per industry standards and manufactures specifications.

The Contractor shall be required to demonstrate successful signal system communications to the Engineer as a requirement of acceptance of this work.

Subsection 614.13 shall include the following:

Fiber Optic Cable Repair will be measured by the hours needed to repair the cut Fiber Optic Cable. All repair work shall be in accordance with these Special Provisions, Project Standards or as directed by the Engineer. Fiber Optic Cable – Repair will include splicing materials, equipment, labor, and all other items necessary to complete the work.

Subsection 613.12 shall include the following:

Pay Item	Pay Unit
Fiber Optic Cable Repair	Hour

REVISION OF SECTION 614 –
TRAFFIC CONTROL DEVICES
TRAFFIC SIGNAL CABINET BASE (INSTALL ONLY)

Section 614 of the Standard Specifications is hereby revised for this project as follows.

Subsection 614.01 shall include the following:

This work is for the installation of either the pre-fabricated or concrete traffic signal controller cabinet bases at locations as shown on the plans. The cabinet bases shall be installed in accordance with City & County of Denver's Traffic Signal Standard detail sheets nos. 16.1.16 and 16.1.17.

Dimensions of the cabinet base are as shown in the following drawing:

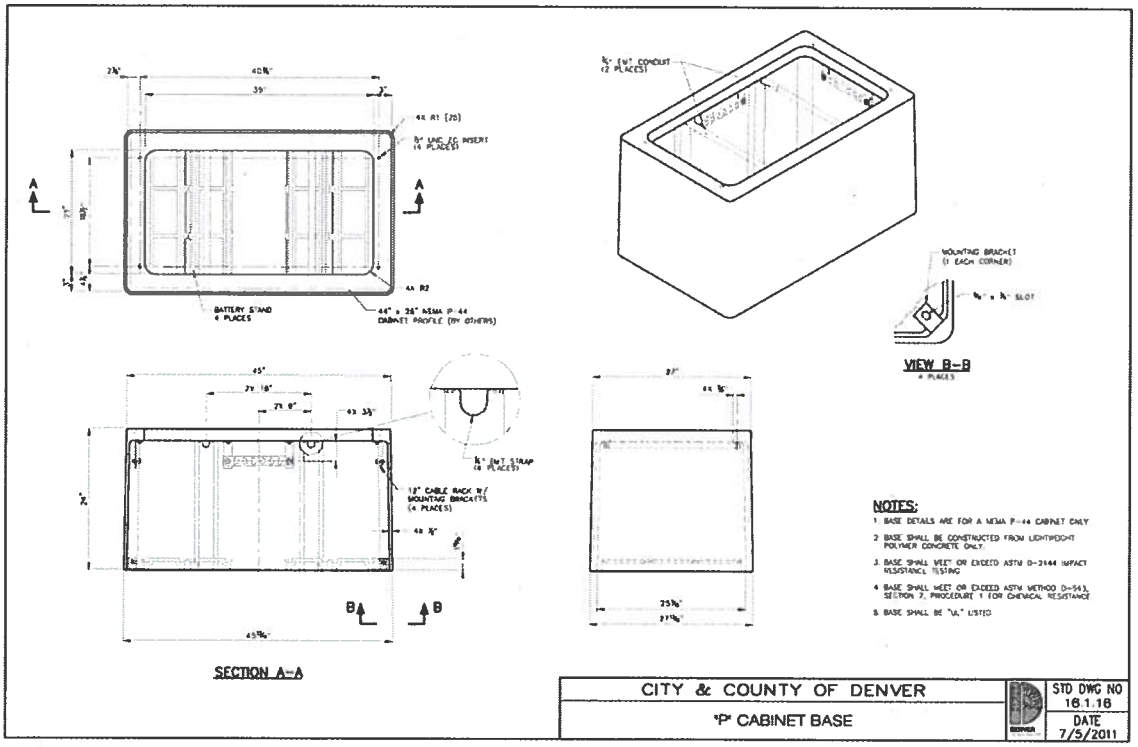

Subsection 614.10 shall include the following:

Prior to starting cabinet base installation, Contractor shall obtain field verification of the location of the cabinet from the Engineer.

Cabinet base installation shall include all labor and materials to completely install a new P-size cabinet base as directed in the plans. The item shall include all excavation, conduit installation and modification work, backfill and restoration of adjacent surface area.

Subsection 614.13 shall include the following:

Installation of the traffic signal cabinet bases shall be measured by the total number of bases are installed and accepted.

REVISION OF SECTION 614 –
TRAFFIC CONTROL DEVICES
TRAFFIC SIGNAL CABINET BASE (INSTALL ONLY)

Subsection 614.14 shall include the following:

Payment will be made under:

Pay Item	Pay Unit
Traffic Signal Cabinet Base (Concrete)	Each
Traffic Signal Cabinet Base (Pre-Fab)	Each

REVISION OF SECTION 614 –
TRAFFIC CONTROL DEVICES
FIBER OPTIC CABLE - GENERAL

Section 614 of the Standard Specifications is hereby revised for this project as follows:

Subsection 614.01 shall include the following:

This work provides for the installation of fiber optic communications cable(s) to be installed in conduit or duct as specified in the plans. The Fiber Optic Cable shall meet the requirements of the Project Special Provision, 614 Loose Tube Fiber Optic Cable included in this specification package for all fiber optic cable furnished on this project.

All fiber-optic interconnect cable(s) shall be furnished and installed by the Contractor as shown on the plans. The number denoted prior to the "MM" designator identifies the number of multi-mode fibers (Strands) in the cable. The number denoted prior to the "SM" designator identifies the number of single-mode fibers (Strands) in the cable. The main cable(s) shall be installed in continuous runs except where maximum pull lengths govern. Manufacturer's recommended limits for cable pull lengths shall not be exceeded.

Cable(s) ends shall be stored in pull boxes, manholes or splice closures at locations indicated in the plans or as directed by the Engineer. Fibers to be spliced and/or connected in any manner shall be limited to those identified in the plans, and only in designated controller cabinets or splice closures. All other fibers shall be left uncut or sealed as appropriate in a manner recommended by the cable manufacturer.

Fiber optic cable(s) shall be installed in a continuous run between all controller cabinets and splice closures as shown in the plans. Lateral cables shall be spliced only in splice closures and routed to the controllers as shown in the plans. **Under no conditions shall the fiber cable(s) be cut out or spliced at intermediate points without the express written direction of the Engineer.**

Cable(s) shall be installed in new conduit or existing conduit as specified in the plans. The Contractor shall be required to leave a minimum of 10 feet of cable slack in the equipment controller cabinet. The Contractor shall leave a minimum of 50 feet of cable slack in the communication pull box adjacent to the controller or shall leave a minimum of 50 feet of slack in all other communication pull boxes and manholes.

Fiber optic cable(s) shall be neatly coiled and clearly tagged and labeled at each communication pull box, manhole and at all locations where the fiber is exposed. Cable tags and Labels shall be as follows:

Materials: Metal or heavy plastic identification tags with cable type and number, copper pair or optic number assignments, and destination shall be provided on both ends of all cables (except station cables) and all splice cases. All cables shall be clearly labeled with cable number (City to determine scheme) and size at each end of the cable, when it enters or leaves a conduit and at 30-foot intervals when run in accessible areas such as tunnels, manholes, ceilings, etc.

Manufacturer: Tags shall be 3M, Panduit or an approved equivalent.

Controller cabinets to be connected under this project will connect directly to the appropriate controller as shown in the plans. This connection will be paid under Telemetry (Field).

REVISION OF SECTION 614 –
TRAFFIC CONTROL DEVICES
FIBER OPTIC CABLE – GENERAL

General Requirements: The Contractor shall provide the Engineer or Engineer's designee with two copies of the cable manufacturer's cable specifications and installation instructions for fiber optic cable(s) in conduit. All installation shall be in accordance with these practices except as otherwise directed by the Engineer or Engineer's designee.

Additional cable costs due to damage caused by the Contractor's neglect of recommended procedures shall be Contractor's responsibility. The main cable shall be installed in continuous runs except where cable type changes or where maximum pull lengths govern. The manufacturer's recommended limits for cable pull tensions shall not be exceeded. Cable ends shall be stored in controller cabinets or pull boxes or manholes immediately adjacent to cabinets or as directed by the Engineer or Engineer's designee.

Lateral and Branch cables shall be installed using appropriate strain relief in the cabinet (through cable ties) at a minimum of three locations.

All fiber optic cables to be installed shall be checked with an OTDR before and after installation. Documentation of fiber performance shall be provided to the Engineer or Engineer's designee within 30 days of test. All optical fibers shall be within the manufacturer's recommended tolerances. In addition, any other acceptance testing recommended by the manufacturer shall be provided. Data shall be supplied to the Engineer or Engineer's designee prior to completion of the project.

Fiber optic cable shall be transported to site using cable reel trailers. Care shall be taken at all times to avoid scraping, denting, twisting, or otherwise damaging the cable before, during and after installation. Damaged cable shall be replaced by the Contractor without additional compensation.

Cable shall be installed in conduit or duct in the field in accordance with the contract drawings. The conduit and duct ends shall have all rough edges smoothed to prevent scraping the cable. All existing or suspected dirt and debris within the conduit shall be cleaned with compressed air before installing cable. A manufacturer recommended lubricant shall be applied to the cable to reduce friction between the cable and duct or conduit. Where fiber optic cables are to be installed in inner duct, the Contractor shall secure each section of the conduit to prevent it from being pulled without the cables.

A cable grip shall be attached to the cables so that no direct force is applied to the optical fiber. The cable grip shall have a ball-bearing swivel to prevent the cable from twisting during pulling. Cable rollers and feeders and winch cable blocks shall be used to guide the cable freely into the duct and at maintenance hole locations. Mechanical aids and pulling cable or ropes shall be used as required. **The maximum pulling tension as defined by the cable manufacturer shall not be exceeded.** The cable shall be taken up at intermediate pulling points with an intermediate cable take-up device as approved by the Engineer or Engineer's designee to prevent over-tension on the cable. Cable pulls shall be continuous and steady between pull points and shall not be interrupted until the entire run of cable has been pulled. Personnel equipped with two-way radios shall be stationed at each maintenance hole, cabinet, pedestal, communications box, and junction box through which the cable is to be pulled to observe and lubricate the cable. Intermediate splices between pull boxes and manholes shall not be allowed. The cable shall be securely fastened in place within pull boxes, pedestals, manholes and cabinets.

REVISION OF SECTION 614 –
TRAFFIC CONTROL DEVICES
FIBER OPTIC CABLE - GENERAL

The contractor shall ensure cable length is sufficient to allow for connection between the communications equipment and the splice equipment and the splice enclosures including provision for slack, vertical runs, cable necessary for splicing, wastage and surplus cable to allow for the removal of the splice enclosure for any future splicing work.

Lateral and Branch Fiber Optic Cable: Lateral/Branch fiber optic cable shall be installed in new or existing conduit, or along existing span wire, as depicted in the plans. Cables shall be as depicted on the plans and may include the 12x12 strands (12 Single Mode and 12 Multi Mode) fiber optic cables, the 36x12 strands (36 Single Mode and 12 Multi Mode) fiber optic cables, the 60x12 strands (60 Single Mode and 12 Multi Mode) fiber optic cables or the 120x24 strands (120 Single Mode and 24 Multi Mode) fiber optic cables and shall be provided with appropriate strain relief in the cabinet, consisting of cable ties in at least three interior cabinet locations. Lateral and Branch fiber optic cable shall be clearly tagged and labeled as such at pull boxes, manholes and all other locations where it is exposed. At any location where the cable is brought into or out of a span wire pole, the Contractor shall install a new weather-head to accommodate the bending radius of the cable.

Fiber Optic Cable will be measured by the linear feet for the main (backbone), lateral and branch cables, and shall include all labor and materials required to install the main, lateral, branch, and start cables through conduits to all pull boxes, manholes, cabinets and closures specified in the plans.

Subsection 614.13 shall include the following:

Installation of the fiber optic cables shall be measured by the total linear feet of cables installed and accepted.

Subsection 614.14 shall include the following:

Payment will be made under:

Pay Item	Pay Unit
Fiber Optic Cable (Denver Hybrid 12x12 Strands)	Linear Feet
Fiber Optic Cable (Denver Hybrid 36x12 Strands)	Linear Feet
Fiber Optic Cable (Denver Hybrid 60x12 Strands)	Linear Feet
Fiber Optic Cable (Denver Hybrid 120x24 Strands)	Linear Feet
Fiber Optic Cable (Single Mode)(24 Strands)	Linear Feet
Fiber Optic Cable (Multi Mode)(12 Strands)	Linear Feet
Fiber Optic Cable (Single Mode)(12 Strands)	Linear Feet
Fiber Optic Cable (Single Mode)(48 Strands)	Linear Feet
Fiber Optic Cable (Single Mode)(72 Strands)	Linear Feet
Fiber Optic Cable (Single Mode)(96 Strands)	Linear Feet
Fiber Optic Cable (Single Mode)(144 Strands)	Linear Feet

REVISION OF SECTION 614 –
TRAFFIC CONTROL DEVICES
LOOSE TUBE FIBER OPTIC CABLE

Section 614 of the Standard Specifications is hereby revised for this project as follows.

Notice:
Every effort has been made to ensure that the information contained in this specification is complete and accurate at the time of publication; however, information contained herein is subject to change.

Trademarks:
ANSI® is a registered trademark of the American National Standards Institute, Inc.
KELLEMS® is a registered trademark of Harvey Hubbell, Inc.

1. Scope

This specification covers the general design requirements and performance standards for fiber optic cables intended primarily for use in the outside plant environment. The purpose of this document is to provide the essential requirements for All-Dielectric Single Jacket Loose Tube Fiber Optic cable to be used in the City of Denver networks.

The product requirements and features described in this specification are those considered useful for ensuring proper selection and manufacturing of fiber optic outside plant cables.

In this specification, all observed or calculated values are rounded off "to the nearest unit" in the last right hand place of figures used in expressing the limiting value. The round-off method of ASTM E 29 is used.

These cables should comply with industry standards such as Telcordia Technologies GR-20 (formerly Bellcore), Electronic Industries Association (EIA), Telecommunications Industry Association (TIA), International Telecommunications Union (ITU), International Electrotechnical Commission (IEC), and American Society for Testing and Materials (ASTM).

2. Optical Fiber Characteristics

High quality optical fibers should be made with pure silica-based glass to have very low loss for infrared wavelengths and to be used to carry large amounts of information for very long distances in optical communication systems.

Details of the optical fibers are not covered in this specification, but the proposed cable should contain AllWave® or TrueWave® fibers for Single-Mode applications, or Multimode fibers that comply with the specific fiber requirements supplied by the City and County of Denver and meets or exceeds these specifications.

3. Cable Core Characteristics

Color Code

The individual colors for fibers and buffer tubes in loose tube cable cores should comply with EIA/TIA-598 as given in the following table.

Table 1 – Fiber and Tube Color Code

Fiber or Tube No.	Color	*Tube No.*	Color
1	Blue (BL)	13	Blue-Dash (BL-DS)
2	Orange (OR)	14	Orange-Dash (OR-DS)
3	Green (GR)	15	Green-Dash (GR-DS)
4	Brown (BR)	16	Brown-Dash (BR-DS)
5	Slate (SL)	17	Slate-Dash (SL-DS)
6	White (WH)	18	White-Dash (WH-DS)
7	Red (RD)	19	Red-Dash (RD-DS)
8	Black (BK)	20	Black-Dash (BK-DS)
9	Yellow (YL)	21	Yellow-Dash (YL-DS)
10	Violet (VI)	22	Violet-Dash (VI-DS)
11	Rose (RS)	23	Rose-Dash (RS-DS)
12	Aqua (AQ)	24	Aqua-Dash (AQ-DS)

Central Strength Member

The central member functions as an anti-buckling element, and should be a glass/epoxy composite dielectric rod. A polyethylene overcoat may be applied to the central member to provide the proper spacing between buffer tubes during stranding.

Loose Tube Cable Buffer Tubes

Optical fibers are enclosed within buffer tubes that have a diameter several times larger than the diameter of the fibers. The optical fibers are loose within the buffer tubes allowing the fibers to move freely. The loose buffer tubes should have a 2.5 mm diameter, with a nominal wall thickness of 0.4 mm. For composite or hybrid cable designs (i.e. when both single-mode and multi-mode fibers are contained within the same cable), the single-mode fibers will be contained in the first buffer tubes. The multi-mode fibers will be contained in the sequenced buffer tubes following the multi-mode buffer tubes.

Table 2 – Buffer Tubes

Fiber Count	Buffer Tube OD (mm)	Fibers per Tube
1-288	2.5	12

The buffer tubes (and filler rods, if necessary) must be stranded in a reverse oscillation lay (ROL) technique around the central member to allow for easy mid-span access. The core of buffer tubes should be wrapped with two counter helically applied threads to bind together the cable core.

Filler Rods

In order to create a round cable, filler rods of the same diameter as the buffer tubes may be used to fill empty positions. Filler rods are made out of HDPE and are natural in color.

Water Blocking System

Water blocking of the core outside and around the buffer tubes must be accomplished via "dry" elements. **In addition, water-blocking inside the buffer tubes must be accomplished via "dry" elements as well.**

These "dry" water blocking elements form a gel compound when in contact with water. The gel should effectively fill the interstices of the core and the inside of the tubes to prevent water penetration along the length of the cable.

Dry water blocking elements should be in the form of binders, tapes, or yarns depending on where they are being applied.

4. Cable Sheath Characteristics

The sheaths described in this section are:

- All-Dielectric Single Jacket: one polyethylene jacket, no metallic elements (SJ)

Strength Elements

Sheath strength elements are applied over the cable core to provide the cable with the required tensile strength. These elements are made of fiberglass (Aramid yarns may be used as well).

Outer Jacket

An outer polyethylene jacket is applied over the cable to provide overall mechanical protection. This jacket is made of MDPE (or HDPE upon request) and is usually black. If required, the jacket could have two co-extruded colored tracer stripes located 180 degrees apart to aid in cable identification. The jacket will be continuous, free from pinholes, splits, blisters, or other imperfections.

Ripcords

For ease of jacket removal, one clearly identifiable polyester ripcord is provided under the outer jacket for SJ designs. SJ/SA designs shall have two under armor ripcords placed 180 degrees apart. DJ/SA designs shall have one ripcord under both the inner jacket and steel armor.

Cable Cross-Sections: Single Jacket (JC) - Figure 1 – Single Jacket

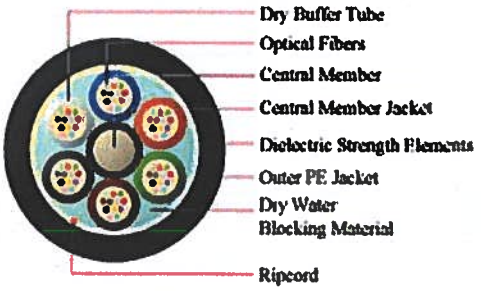

Table 3 – Target Cable Outer Diameters

	NUMBER OF FIBERS							
	2 - 60 (5 Pos.)	2 - 72 (6 Pos.)	73 - 96 (8 Pos.)	97 - 120 (10 Pos.)	121- 44 (12 Pos.)	145-216 (18 Pos.)	217-240 (20 Pos.)	241-288 (24 Pos.)
SHEATH TYPE	Cable OD in. (mm)	Cable OD in. (mm)	Cable OD in. (mm)	Cable OD in. (mm)	Cable OD in. (mm)	Cable OD in. (mm)	Cable OD in. (mm)	Cable OD in. (mm)
SJ	0.42 (10.6)	0.43 (11.0)	0.50 (12.8)	0.57 (14.4)	0.64 (16.2)	0.66 (16.7)	0.69 (17.4)	0.76 (19.2)

5. Mechanical, Environmental and Electrical Requirements

These cables must meet the requirements of Telcordia GR-20-CORE with all testing performed based on EIA/TIA-455 standards. The manufacturing company must provide proof of their quality control standards with ISO 9001 and TL9000 certifications. The cables should comply with the following temperature ranges:

Operation:	-40°C to 70°C (-40°F to 158°F)
Installation:	-30°C to 60°C (-22°F to 140°F)
Storage/Shipping:	-40°C to 75°C (-40°F to 167°F)

Single-Mode Fibers

Per Telcordia GR-20, the magnitude of the attenuation change shall be less than or equal to 0.05 dB for 90% of the test fibers and less than or equal to 0.15 dB for the remaining 10% of test fibers. Cable aging allows for 0.10 dB/km average attenuation change with a magnitude of the maximum attenuation change for each individual fiber to be less than 0.25 dB/km. These attenuation values include a 0.05 dB allowance for measurement repeatability.

During mechanical and environmental testing evidence of cracking, splitting or other failure of the sheath components when examined under 5X magnification would result in failure of the proposed test requirements. In addition, no fiber shall lose optical continuity because of the test.

Table 4 – Testing for Single Mode Fibers

Cable Test	Test Method	Requirement
Tensile Loading and Bending	EIA/TIA-455-33 IEC 794-1-E1	90% < 0.05 dB Max. Added Loss 100% < 0.15 dB Max. Added Loss
Cyclic Flexing	TIA/EIA-455-104 IEC 794-1-E6	90% < 0.05 dB Max. Added Loss 100% < 0.15 dB Max. Added Loss
Cyclic Impact	EIA/TIA-455-25 IEC 794-1-E4	90% < 0.05 dB Max. Added Loss 100% < 0.15 dB Max. Added Loss

Table 4 – Testing for Single Mode Fibers (Continue)

Cable Test	Test Method	Requirement
Compressive Loading	TIA/EIA-455-41 IEC 794-1-E3	90% < 0.05 dB Max. Added Loss 100% < 0.15 dB Max. Added Loss
Twist	TIA/EIA-455-85 IEC 794-1-E7	90% < 0.05 dB Max. Added Loss 100% < 0.15 dB Max. Added Loss
Low and High Temperature Bend	EIA/TIA-455-37 IEC 794-1-E11	90% < 0.05 dB Max. Added Loss 100% < 0.15 dB Max. Added Loss
External Freezing	EIA/TIA-455-98 IEC 794-1-F6	< 0.05 dB Mean Added Loss < 0.15 dB Max. Added Loss
Temperature Cycling	EIA/TIA-455-3 IEC 794-1-F1	< 0.05 dB/km Mean Added Loss < 0.15 dB/km Max Added Loss
Cable Aging	EIA/TIA-455-3 IEC 794-1-F1	< 0.10 dB/km Mean Added Loss < 0.25 dB/km Max Added Loss
Water Penetration	EIA/TIA-455-82 IEC 794-1-F5	No flow after 24 hours from one meter length of cable

Multimode Fibers

Per Telcordia GR-20, the allowable attenuation increase during the mechanical and environmental testing is 0.20 dB. Cable aging allows for the maximum attenuation change for each individual fiber to be less than 0.40 dB/km.

During mechanical and environmental testing evidence of cracking, splitting or other failure of the sheath components when examined under 5X magnification would result in failure of the proposed test requirements. In addition, no fiber shall lose optical continuity because of the test.

Table 5 – Testing for Multi-Mode Fibers

Cable Test	Test Method	Requirement
Tensile Loading and Bending	EIA/TIA-455-33 IEC 794-1-E1	0.20 dB Max. Mean Added Loss
Cyclic Flexing	TIA/EIA-455-104 IEC 794-1-E6	0.20 dB Max. Mean Added Loss
Cyclic Impact	EIA/TIA-455-25 IEC 794-1-E4	0.40 dB Max. Mean Added Loss
Compressive Loading	TIA/EIA-455-41 IEC 794-1-E3	0.20 dB Max. Mean Added Loss
Twist	TIA/EIA-455-85 IEC 794-1-E7	0.20 dB Max. Mean Added Loss
Low and High Temperature Bend	EIA/TIA-455-37 IEC 794-1-E11	0.40 dB Max. Mean Added Loss
External Freezing	EIA/TIA-455-98 IEC 794-1-F6	0.20 dB Max. Mean Added Loss
Temperature Cycling	EIA/TIA-455-3 IEC 794-1-F1	< 0.5 dB/km Max Added Loss 80 % < 0.25 dB/km Added Loss
Cable Aging	EIA/TIA-455-3 IEC 794-1-F1	< 1.0 dB/km Max Added Loss 80 % < 0.5 dB/km Added Loss
Water Penetration	EIA/TIA-455-82 IEC 794-1-F5	No flow after one hour from one meter length of cable

Note:
The tensile rating for all of the cables described should be 2.7 kN (600 lbf), with a compression rating of at least 220 N/cm under GR-20 requirements.

6. Cable Marking

Printed Characters

For standard outer jackets, printed characters shall be indent printed with white characters for black jackets, black characters for non-black jackets, or as otherwise specified.
For standard striped outer jackets, printed characters shall be indent printed with white characters for red, green, orange, yellow, blue striped cables, light-blue characters for white striped cables, or as otherwise specified by the customer.

The characters shall be of proper height and space to produce good legibility. Character heights of 2 mm should facilitate adequate readability. An occasional illegible marking is permitted if there is a legible marking on either side.

Markings

The cable shall be sequentially marked at one meter, or two-foot intervals depending on specific requirements issued by the City of Denver. The length marks shall not be reset to zero on any length of the cable. The actual length of cable shall be within +1, -0% of the marked length.
Each length of cable shall be marked with the following legend:
"(Manufacturer Name) OPTICAL CABLE, (Product Part Number), (Month and Year of Manufacture, [MM-YY]), (Fiber Count [XXX F], where XXX is the number of optical fibers in the cable), and (Manufacturers' Serial Number)"

Re-Markings

Only one remarking is permitted. If required, either of the following methods for remarking shall be used: Method A: Completely remove the defective marking and remark the characters with the original color. Method B: Leave the defective marking on the jacket and remark on a different portion of the cable jacket with yellow character print. The new number sequence shall differ from any other existing marking by at least 5000.

Any cable that contains two sets of markings shall be labeled to indicate the color and sequential numbers to be used. The labeling shall also be applied to the reel tag.

Cable Packaging

Reels

The manufacturer shall supply the product using their standard reel sizes, methods, apparatus, and reel wood lagging, but stenciled according to these specifications. The specifications outlined here are guidelines on what is expected with respect to packaging.

Reels are assumed to be in good working condition, firm, and be able to support the product through shipping and final installation. Reels shall be clean, dry and free of excessive dirt. All reels shall be checked for high nails, stave fit and proper stenciling.

Reel Labels

Each wooden reel shall be permanently marked with the following information:

- "(Manufacturer's name)" (red paint)
- "OPTICAL CABLE" (black paint)
- An arrow and the wording "cable end" to indicate the position of the outside cable end. (red paint)
- An arrow and the wording "ROLL THIS WAY" to indicate the direction the reel should be rolled to prevent loosening of the cable. (black paint)
- Reel Number (red paint)

Cable handling stickers/cards must be attached to both flanges of every reel. Each sticker must be stapled to the flange. See Figure 4 for illustrations of the stickers to be used.

Reel Lagging

Thermal Protection

Outer layers of the reel shall be covered with a protective wrap to limit the solar heating of the cable. This helps limit the cable surface temperature so that it will not exceed 10 C (18 F) above ambient temperature under maximum solar radiation according to Telcordia GR-20 requirements. All foil wrap shall be securely fastened to the cable by at least 2 pieces of strapping tape.

Composite & Wood Lagging

Reels shipping domestically shall be lagged with a suitable protective wrap (can be the same thermal protection wrap) and banded with steel straps. This wrap shall cover the cable from flange to flange and provided some mechanical protection to the outer layers of cable as well as weather resistance. Reels shipping for export shall be lagged with wooden boards nailed to each flange and banded with steel straps in addition to the protective wrap around the outer layers of cable.

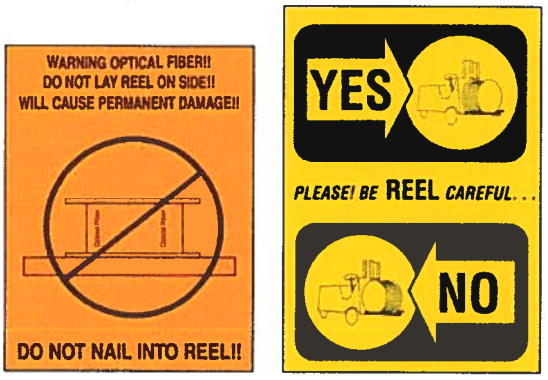

Figure 4 – Reel Stickers

Others

Cable Ends

Each end of the cable shall have end seals, either end caps or KELLEMS® pulling grips, in order to prevent moisture ingress into the cable during shipping, storage, or installation.

The top end of the cable shall be securely fastened to the inside of the reel flange to prevent the cable from becoming loose in transit or during handling. The bottom end, "test tail", shall be approximately three meters in length and easily accessible. The end shall be protected within a cable slot and be securely fastened to the outside of the reel flange with wire ties or walkout straps. Staples, nails or yarn attached to the reel during manufacturing shall be removed.

The cable slot can be partially protected to prevent the cable tail from moving outside this, however for export orders the cable slot must be completely sealed by metallic protection rings, plywood covers, or other.

Cable Length Tolerance

Cables ordered to standard factory lengths shall have an actual length within –0% and +5% of the length ordered unless otherwise specified by the customer.

Certified Test Data

Each cable shall have certified test data securely fastened to the reel in a waterproof wrapping. The certified test data sheet shall include the following information:

- Cable Number
- Date
- Customer Name
- Ordered Length
- Customer Order Number
- Ship Length
- Customer Cable Code
- Customer Reel Number
- Customer's Attenuation Specification(s)
- Number of Fibers
- Cable Construction
- Fiber Transmission Data
- Bandwidth Data – only applies to Multi-Mode Fibers
- Authorized Signature

REVISION OF SECTION 614 -
TRAFFIC CONTROL DEVICES
LOOSE TUBE FIBER OPTIC CABLE

Reel Tag

Each cable shall have a reel tag securely fastened to the reel in a waterproof wrapping. The Reel Tag (Cut Length Data Sheet) shall include the following information:

- Cable Number
- Date
- Customer Name
- Ordered Length
- Customer Order Number
- Ship Length
- Customer Cable Code
- Customer Reel Number
- Customer's Attenuation Specification(s)
- Number of Fibers
- Beginning and Ending Sequential Length Markings
- Gross Weight
- Net Weight
- Inspected By Signature

REVISION OF SECTION 614 – TRAFFIC CONTROL DEVICES TRAFFIC VALVE BOX

Section 614 of the Standard Specifications is hereby revised for this project as follows.

Subsection 614.01 shall include the following:

This work is for the installation of traffic valve box. The valve box shall be furnished by the City and County of Denver and installed by the Contractor in accordance with City & County of Denver's Traffic Signal Standard detail sheet no. 16.1.7.

Subsection 614.10 shall include the following:

Prior to valve box installation, the Contractor shall obtain field verification of the locations of the valve box from the Engineer.

Traffic valve box installation shall include all labor and materials to completely install a valve box as shown in the plans. The item shall include all excavation, conduit installation and modification work, backfill and restoration of adjacent surface area.

Subsection 614.13 shall include the following:

Installation of the traffic valve boxes shall be measured by the total number of valve boxes are installed and accepted.

Subsection 614.14 shall include the following:

Payment will be made under:

Pay Item	Pay Unit
Traffic Valve Box (Install Only)	Each

REVISION OF SECTION 626
MOBILIZATION

Section 626 of the Standard Specifications is hereby revised as follows:

Subsection 626.02 is hereby revised as follows:

Mobilization shall be paid as a bid item and on a per work order basis. The bid item price will be paid once (1) for each work order issued during the length of the contract.

The total sum of all payments shall not exceed the original contract amount quoted for the item, regardless of the fact that the contractor may have, for any reason shut down the work on the project or moved equipment away from the project and then back again.

Payment will be made under:

Pay Item	Pay Unit
626-00000 Mobilization	Each

REVISION OF SECTION 630

CONSTRUCTION ZONE TRAFFIC CONTROL
UNIFORMED TRAFFIC CONTROL

Section 630 of the Standard Specifications is hereby revised for this project as follows:

Subsection 630.09 shall include the following:

This work consists of furnishing a uniformed police agency officer and vehicle from the following local agency to perform uniformed traffic control:

Uniformed Officers - The Contractor shall employ off-duty police officers to provide traffic control and traffic enforcement throughout the project as required by the Project Manager. Authorization must be made by the Project Manager in advance of working arrangements for Uniformed traffic Control. Arrangements for officers shall be made at least 2 weeks in advance by contacting the following police agency:

Denver Police Department (Special Events Unit)
Phone Number: (720) 913-6034

Subsection 630.02 is revised to include the following:

(a) Qualifications. The local agency officer shall have completed "The Safe and Effective Use of Law Enforcement Personnel in Work Zones" Training Course. The Contractor shall provide copies of documentation certifying the officer's successful completion of this course.

Subsection 630.17 shall include the following:

Uniformed Traffic Control will be measured by the total number of hours that Uniformed Traffic Control is actually used as authorized.

Subsection 630.18 shall include the following:

The accepted number of hours of Uniformed Traffic Control will be paid for at the contract unit price per hour.

Uniformed Traffic Control (Vehicle) will not be measured separately but shall be included in the price for the uniformed traffic control officer and traffic control vehicle.

Payment will be made under:

Pay Item	Pay Unit
Uniformed Traffic Control	Hour

REVISION OF SECTION 630
CONSTRUCTION ZONE TRAFFIC CONTROL

Section 630 of the Standard Specifications is hereby revised as follows:

Subsection 630.01 shall be revised to include the following:

The Contractor shall submit, in writing to the Engineer, the proposed Method of Handling Traffic (MHT) for review and approval. The MHT shall be developed according to this section and the construction plans.

Subsection 630.05 Traffic Cones shall include the following:

Steel drum channelizing devices shall not be used for traffic control

Subsection 630.06 Channelizing Devise (Fixed) shall include the following:

Non-metallic drums or tubular markers may be substituted for vertical panel channelizing devices.

Subsection 630.09 General shall include the following:

The flagger's STOP/SLOW sign paddle shall be 18 inches with letters six inches high.

Subsection 630.10(a), shall include the following:

When a different MHT is required for a subsequent construction phase, it must be submitted at least two weeks prior to starting that phase. All proposed methods of handling traffic shall be approved, in writing, by the Project Engineer following approval of the Traffic Engineering Services Department.

Approval of the proposed MHT does not relieve the Contractor of liability specifically assigned to him under the contract. The Contractor shall erect and maintain warning lights, signs, barricades, and sufficient safeguards around all excavations, embankments, and obstructions.

The contractor shall notify the Project Engineer by Thursday at 3:00 P.M. which streets they intend to work on the following week. This notification will be made for all phases of construction.

Subsection 630.10(a)(1) shall be added as follows:

The key elements of the Contractor's method of handling traffic (MHT) are outlined in subsection 630.10(a).
The components of the Traffic Control Plan (TCP) for this project are included in the following:

- Subsection 104.04 and Section 630 of the Standard Specifications.
- Tabulation of Traffic Engineering Items included in the plans for this project.
- Latest revised Standard Plan S-630-1, Traffic Controls for Highway Construction and Standard Plan S-630-2.

REVISION OF SECTION 630
CONSTRUCTION ZONE TRAFFIC CONTROL

Special Traffic Control Plan requirements for this project are as follows:

1. During the construction of this project, traffic shall use the present traveled roadway.

2. Work that interferes with traffic on will only be permitted during the following hours:

   - The Contractor shall perform all the work on the roadway between the hours of 8:30 AM and 3:30 PM or as approved by the Project Engineer. Weekend and nighttime work will be allowed with the prior written approval of the Project Engineer. During this time, only one lane can closed on each approach.
   - Work will not be permitted that directly or indirectly interferes with the flow of traffic between the hours of 5:30 AM and 8:30 AM Monday through Friday; between the hours of 3:30 PM to 6:30 PM Monday through Thursday; and after 2:00 PM on Fridays unless otherwise authorized by the Project Engineer.
   - No work on Holidays
   - Contractor shall not close lanes during special events.
   - Contractor shall coordinate lane closures with adjacent projects.
   - Contractor shall maintain business access during business hours.
   - The Contractor shall coordinate all of the work on the roadway during any special event with the City and County of Denver.

3. The Contractor shall develop an Access Maintenance Plan in coordination with, and based on the requirements of, the affected property owners and tenants, and submit it to the Engineer for approval prior to commencement of work. This plan shall detail all barricades, ramps, signs, and temporary means of access required by the property owners or tenants. Prior to commencing any work which affects access to a property, the Access Maintenance Plan for that property must be submitted and approved by the Engineer. The Contractor shall maintain access to all roadways, side streets, walkways, alleyways, driveways, and hike/bike paths at all times unless otherwise directed by the Engineer. Parking areas temporarily disturbed by construction activities shall be restored to a useable condition during non-working hours. Such temporary parking shall utilize an all-weather surface. The Contractor shall be required to maintain temporary drives at any existing establishment that has singular access off of the roadways, unless otherwise approved in writing by the property owner.

4. The Access Maintenance Plan shall be coordinated with all affected owners and tenants. The Access Maintenance Plan shall include documentation of this coordination, including the approval signature of each affected owner or tenant. Should the Contractor be unable to obtain approval and signatures, documentation of the efforts made to obtain said approval and signatures must be submitted. All access shall be maintained on surfaces equal to or better than those existing at the time the access is first disturbed. For short periods of time only as allowed by the Engineer, access may be maintained on an aggregate base course surfaces.

5. The Contractor shall install construction traffic control devices where they do not block or impede other existing traffic control devices or sidewalks for pedestrians, disabled persons or bicyclists. The Contractor is restricted from storing any materials, construction traffic control devices, signs, etc. in any median area or park area.

REVISION OF SECTION 630
CONSTRUCTION ZONE TRAFFIC CONTROL

6. The Contractor shall maintain continuous access throughout the project for pedestrians, bicyclists, and disabled persons. When the existing access route is disturbed by construction, a temporary all-weather access shall be provided. All temporary access shall be a minimum of 5 feet wide and meet Americans with Disabilities Act (ADA) requirements. Acceptable all weather surfacing shall be concrete or asphalt surface, or as approved by the Engineer. Delineation of pedestrian access through the work area shall be accomplished using temporary plastic fencing.

7. The costs of maintaining access will not be paid for separately, unless otherwise provided, but shall be included in the work. Utilization of materials to be incorporated into the work may be permitted. However, any degradation or other contamination or destruction shall be corrected at the Contractor's expense prior to acceptance.

8. Vertical cuts or fills greater than 1 inch resulting from construction operations adjacent to traffic lanes, or within the clear zone shall be temporarily sloped at a 6:1 or flatter slope, and delineated at 35 foot intervals immediately after removal operations to safeguard the traveling public.

9. Construction equipment used on this project shall meet the same minimum exhaust requirements as those specified by the manufacturer of the equipment.

10. The Contractor and subcontractors shall equip their construction vehicles with flashing amber lights. Equipment to be used at night shall also be equipped with flashing amber lights. Flashing amber lights on vehicles and equipment shall be visible from all directions.

11. During non-construction periods (evenings, weekends, holidays, etc.) all work shall be adequately protected to insure the safety of vehicular and pedestrian traffic, as detailed in the Contractor's MHT. Excavations or holes shall be filled in or fenced when unattended.

12. Whenever the Contractor removes, obliterates, or overlays any pavement markings, he /she shall replace them on a daily basis prior to opening the affected areas to traffic. All temporary pavement markings shall fully comply with the Standard Specifications and Special Provisions.

13. The Contractor shall not have construction equipment or materials in the lanes open to traffic any time unless directed by the Engineer.

14. All personal vehicle and construction equipment parking is prohibited where it conflicts with safety, access, or the flow of traffic. Landscaped areas, public park areas, and roadway shoulders shall be kept clear of parking and storage of all personal and construction equipment except where approved by the Engineer.

15. The Contractor shall not place tack coat on any surface to be paved where traffic will be forced to travel upon fresh bituminous materials.

REVISION OF SECTION 630
CONSTRUCTION ZONE TRAFFIC CONTROL

16. The Contractor shall be required to make arrangements with the Regional Transportation district (RTD) prior to closing any existing bus stops within the project limits. Temporary stops will be required as directed by the Engineer and as required by RTD. For bus stop/route conflicts Regional Transportation District, RTD / 1560 Broadway, Suite 700, Denver, CO 80202 shall be contacted two business days prior to start of construction.

17. The Contractor shall be required to maintain temporary drives at any existing establishment that has singular access off of the roadways, unless otherwise approved in writing by the property owner.

18. Any work that interferes with traffic will not be allowed on holidays or any day of a three-day or four-day weekend that includes a holiday. Holidays on which this restriction applies consist of those holidays recognized by the State of Colorado as listed in subsection 101.36

19. All lane closures shall be subject to the approval of the Engineer. Request for each closure shall be made at least 24 hours in advance of the time the lane closure is to be implemented. Lane closures will not be allowed to remain unless being utilized in continuum for the intended purpose for which they were set up.

20. During non-working hours, the roadways shall be restored to a safe travel conditions for the free flow of traffic. Any maintenance required restoring the roadways to this condition, including the pavement patching and grading, shall be done prior to opening the areas to traffic or completing work for the day.

21. The Contractor shall clean the roadway of all construction debris before opening it to traffic.

22. Two-way traffic shall be maintained on all two-way streets, via flagging if necessary for closures of less than one day unless authorized by the Engineer and the Traffic Engineering Services Department. One lane, one-way traffic shall be maintained at all times on one-way streets outside of the Central Business District and two lanes, one-way traffic shall be maintained at all times within the Central Business District.

23. All flagging stations used at night shall be illuminated with floodlights. Street, highway lights and "high mast lighting" may be used for flagging station illumination when approved by the Engineer. Floodlights shall be located and directed so as not to interfere with the sight of any motorists, and the cost to be included in the work.

24. Prior to removal and resetting of any sign the Contractor and Engineer shall prepare an inventory. Any signs damaged due to the Contractor's operations shall be replaced in kind or repaired by the Contractor at no additional cost to the project.

25. Unless noted otherwise, all costs incidental to the foregoing requirements shall be included in the original contract prices for the project, including any additional traffic control items required for haul routes into the project.

Subsection 630.10 (10) shall be added as follows:

Number of hours for uniformed traffic control shall be tabulated for submittal.

REVISION OF SECTION 630
CONSTRUCTION ZONE TRAFFIC CONTROL

Subsection 630.13 General shall be revised to include the following:

Contractor shall obtain all required access and construction permits from the City & County of Denver prior to initiating work along City right of way.

All lane closures require an arrow board to be installed.

All streets that will be reduced in the number of travel lanes should have variable message boards installed for a minimum of 3 days after the striping change to inform drivers of the lane reduction.

Subsection 630.14 shall include the following:

The flagger's STOP/SLOW sign paddle shall be 18 inches with letters six inches high.

Subsection 630.17 shall include the following:

The Contractor shall furnish all other personnel – including flaggers, traffic control inspector, and traffic control supervisor - and other materials necessary to perform the Construction Zone Traffic Control as required and these quantities will not be measured but will be included in the cost of Traffic Control Management.

Temporary pavement markings for traffic control will not be measured and paid for separately, but shall be included in the work.

Subsection 630.18 shall include the following:

All costs incidental to maintenance of access will not be paid for separately, but shall be included in the work.

All costs incidental to the foregoing requirements shall be included in the original contract prices for the project.

Payment will be made under:

Pay Item	Pay Unit
Traffic Control Management	Hour
Construction Traffic Sign (Panel Size A)	Each
Construction Traffic Sign (Panel Size B)	Each
Advance Warning Flashing or Sequence Arrow Panel (A Type)	Each
36 Inch Traffic Cone	Each

Contract Control Number:

IN WITNESS WHEREOF, the parties have set their hands and affixed their seals at Denver, Colorado as of

SEAL

CITY AND COUNTY OF DENVER

ATTEST:

By_____

_____

APPROVED AS TO FORM:

REGISTERED AND COUNTERSIGNED:

By_____

By_____

By_____

IN WITNESS WHEREOF, the parties have executed this agreement and affixed their seals at Denver, Colorado as of the day first above written.

Contract Control Number: 201845992

Vendor Name: GLOBAL UNDERGROUND CORPORATION

By: _____

Name: ROBERT POWILLEZT
(please print)

Title: VICE PRESIDENT
(please print)

ATTEST: [if required]

By: _____

Name: Eric Ensign
(please print)

Title: CFO/Secretary/Treasurer
(please print)