CITY AND COUNTY OF DENVER

STATE OF COLORADO

DENVER
THE MILE HIGH CITY

DEPARTMENT OF PUBLIC WORKS

Contract Documents

Contract Number: 201846567

River North Park

December 28, 2018

DENVER
THE MILE HIGH CITY

NOTICE OF APPARENT LOW BIDDER

Iron Woman Construction
5680 Emerson St.
Denver, CO 80216

The EXECUTIVE DIRECTOR OF PUBLIC WORKS has considered the Bids submitted on **February 7, 2019,** for work to be done and materials to be furnished in and for:

CONTRACT NO: 201846567 River North Park

as set forth in detail in the Contract Documents for the City and County of Denver, Colorado. It appears that your Bid is fair, equitable, and to the best interest of the City and County; therefore, said Bid is hereby accepted at the bid price contained herein, subject to the approval and execution of the Contract Documents by the City in accordance with the Charter of the City and County of Denver, and to your furnishing the items specified below. The award is based on the total bid items: **Schedule A (bid item numbers 201 through 630 (50 bid items)) plus Schedule B (bid items 011100-1 through 334600-2 (145 bid items)) for a total of (195 bid items)**, the total estimated cost thereof being: **Four Million Eight Hundred Sixty-Two Thousand Eight Hundred Seventy-Three Dollars and Ninety-One Cents ($4,862,873.91).**

It will be necessary for you to appear forthwith at the office of the Department of Public Works, Contract Administration, 201 W. Colfax Ave., Dept 614, Denver, Colorado 80202, to receive the said Contract Documents, execute the same and return them to the Department of Public Works, Contract Administration within the time limit set forth in the Bid Package Documents.

In accordance with the requirements set forth in the Contract Documents, you are required to furnish the following documents:

a. Insurance Certificates: General Liability and Automotive Liability, Workman's Compensation and Employer Liability;
b. Payment and Performance Bond along with One Original Power of Attorney relative to Performance and/or Payment Bond; and,

All construction Contracts made and entered into by the City and County of Denver are subject to Affirmative Action and Equal Opportunity Rules and Regulations, as adopted by the Manager of Public Works, and each contract requiring payment by the City of one-half million dollars ($500,000.00) or more shall first be approved by the City Council acting by ordinance and in accordance with Section 3.2.6 of the Charter of the City and County of Denver.

Prior to issuance of Notice to Proceed, all Equal Opportunity requirements must be completed. Additional information may be obtained by contacting the Director of Contract Compliance at (720-913-1700).

DENVER
THE MILE HIGH CITY

NOTICE OF APPARENT LOW BIDDER
CONTRACT NO. 201846567

The Bid Security submitted with your Bid, will be returned upon execution of the Contract and furnishing of the Performance Bond. In the event you should fail to execute the Contract and to furnish the performance Bond within the time limit specified, said Bid Security will be retained by the City and County of Denver as liquidated damages, and not as a penalty for the delay and extra work caused thereby.

Dated at Denver, Colorado this 15th day of February 2019.

CITY AND COUNTY OF DENVER

By Eulois Cleckley
Executive Director of Public Works

cc: Kristen Moore (CAO), Treasury (taxauditadmin@denvergov.org), DSBO Inbox (dsbo@denvergov.org), Cindy Ackerman, Owen Snell, Laura Wasson, Prevailing Wage (prevailingwage@denvergov.org), File.

CITY AND COUNTY OF DENVER

STATE OF COLORADO

DENVER
THE MILE HIGH CITY

DEPARTMENT OF PUBLIC WORKS

Bid Form Package

Contract Number: 201846567

River North Park

December 28, 2018

CITY AND COUNTY OF DENVER
DEPARTMENT OF PUBLIC WORKS

TABLE OF CONTENTS
FOR
BID FORM AND SUBMITTAL PACKAGE

Table of Contents	BF-1
Bidder's Checklist	BF-2 through BF-3
Bid Form and Submittal Package Acknowledgment Form	BF-4 through BF-5
Bid Form	BF-6 through BF-8
List of Proposed Minority/Woman Business Enterprise(s)	BF-9 through BF-12
Commitment to Minority/Woman Business Enterprise Participation	BF-13
Minority/Woman Business Enterprise Letter(s) of Intent & Checklist	BF-14 through BF-15
Joint Venture Affidavit	BF-16
Joint Venture Eligibility Form	BF-17 through BF-19
Bid Bond	BF-20
Diversity and Inclusiveness in City Solicitations Form	BF-21 through BF-24

DENVER
THE MILE HIGH CITY

This Checklist is provided solely for the assistance of the bidders, and need not be returned by Bidders with your BID FORM PACKAGE.

BIDDER'S CHECKLIST

These forms comprise the Bid Form and Submittal Package. Designated forms must be completed and turned in at the time of Bid Opening. Bidders should refer to the Contract Documents, particularly the Instructions to Bidders, accompanying this package, in completing these forms.

FORM/ PAGE NO.	COMMENTS	COMPLETE
BF-4 – BF-5	a.) Legal name, address, Acknowledgment signature and attestation (if required.)	☑
BF-6+	a.) Fill in individual bid item dollars and totals in Numerical figures only b.) Complete all blanks c.) Legal name required	☑ ☑
BF-7	a.) Write out bid total or bid totals in words and figures in the blank form space(s) provided b.) Calculate Textura® Construction Payment Management System Fee from chart on pg. BF-3 and write fee in the space provided	☑
BF-8	a.) List all subcontractors who are performing work on this project	☑
BF-9 – BF-10	a.) Fully complete List of Proposed Minority /Woman Business Enterprise Bidders, Subcontractors, Suppliers, Manufacturers, or Brokers – check appropriate boxes.	☑
BF-11	a.) Complete all blanks b.) If Addenda have been issued, complete bottom section.	☑ ☑
BF-12	a.) Complete appropriate sections - signature(s) required. b.) If corporation, then corporate seal required.	☑ ☑
BF-13	a.) Fully complete Commitment to Participation	☑
BF-16	a.) If applicable, fully complete Joint Venture Affidavit (Submit 10 days prior to Bid Opening date)	☑
BF-17 – BF-19	a.) If applicable, fully complete Joint Venture Eligibility Form (Submit 10 days prior to Bid Opening date)	☐
BF-20	a.) Fill in all Bid Bond blanks b.) Signatures required c.) Corporate Seal if required d.) Dated e.) Attach Surety Agents Power of Attorney or Certified or cashier's check made out to the Manager of Revenue referencing Bidder's Company and Contract Number.	☑ ☑ ☑ ☑ ☑
BF-21- BF-24	a.) Each bidder, as a condition of responsiveness to this solicitation, shall complete and return the "Diversity and Inclusiveness in City Solicitations Information Request Form" with their Bid.	☑

Textura ® Construction Payment Management System ("Textura")

Bidder recognizes and agrees that it shall be required to use the Textura® Construction Payment Management System ("Textura") for this Project to request payment from the City and to pay subcontractors. All certified subcontractors or suppliers who are listed for participation towards any assigned program goal must be paid via Textura. All fees associated with Textura are to be paid by the bidder for billings for work performed. Bidders are required, when preparing a bid, to enter the price of Textura on the line provided for the service. The fee is all inclusive of all subcontractor, project and subscription fees associated with Textura. The bidder will calculate the fee based on their total bid (not including any alternates, if applicable) and the table below, and then include it on the line item provided in the bid form labeled **"Textura® Construction Payment Management System Fee"**. This expense becomes part of the contract and billable to the City. All costs including, but not limited to, costs associated with training, entering data, and/or utilizing Textura other than the Textura Construction Payment Management System Fee are overhead and shall not be reimbursed by the City. Bidder will be responsible for any tax on the Textura fee. As with other taxes, the City will not reimburse bidder for this cost and therefore this cost should be included in bidder's bid. Textura will invoice the awarded bidder directly.

Project Value	Project Fee (GC + Sub Usage)
$100,000 – 249,999.99	$780
$250,000 - $499,999.99	$1,625
$500,000 - $999,999.99	$3,250
$1,000,000 - $2,999,999.99	$5,850
$3,000,000 - $4,999,999.99	$9,100
$5,000,000 - $9,999,999.99	$12,220
$10,000,000 - $19,999,999.99	$20,345
$20,000,000 - $49,999,999.99	$32,500
$50,000,000 - $99,999,999.99	$48,750
$100,000,000 - $199,999,999.99	$69,095
$200,000,000 - $299,999,999.99	$85,345
$300,000,000 - $399,999,999.99	$109,720
$400,000,000 - $499,999,999.99	$142,220
$500,000,000 - $999,999,999.99	$162,500
$1,000,000,000 - $1,999,999,999.99	$345,345
$2,000,000,000 - $4,999,999,999.99	$650,000
$5,000,000,000 - $9,999,999,999.99	$1,015,625
$10,000,000,000 or greater	$1,503,125

For more information:

http://www.denvergov.org/content/denvergov/en/contract-administration/bidding-process.html

CITY AND COUNTY OF DENVER
DEPARTMENT OF PUBLIC WORKS

BID FORM AND SUBMITTAL PACKAGE ACKNOWLEDGMENT

CONTRACT NO. 201846567

RIVER NORTH PARK

BIDDER: Iron Woman Construction and Environmental Services, LLC
(Legal Name per Colorado Secretary of State)

ADDRESS: 5680 Emerson St

Denver, CO 80216

The undersigned bidder states that the undersigned bidder has received and had an opportunity to fully and thoroughly examine a complete set of the Contract Documents for **CONTRACT NO. 201846567, RIVER NORTH PARK,** made available to the undersigned bidder pursuant to Notice of Invitation for Bids dated December 28, 2018.

The undersigned bidder acknowledges that a complete and final set of the Contract Documents for the referenced Project, the components of which are identified below, are bound and maintained as the record set of Contract Documents by the Contract Administration Division of the Department of Public Works and that this Record Set is available for examination by the undersigned bidder.

The undersigned bidder, having thoroughly examined each of the components identified below and contained in Contract Documents, HEREBY SUBMITS THIS BID FORM AND SUBMITTAL PACKAGE, fully understanding that the Contract Documents, as defined in Paragraph 1 of the contract, including this executed Bid Form and Submittal Package, constitute all of the terms, conditions and requirements upon which this submission is based and further understanding that, by submission of this Bid Form and Submittal Package, the City shall rely on the representations and commitments of the undersigned bidder contained herein.

The following completed documents comprising this Bid Form and Submittal Package will be included with and, by this reference, are expressly incorporated into the Contract Documents specified at Paragraph 1 of the Contract:

Bid Form and Submittal Package Acknowledgment Form
Bid Form
List of Proposed Minority/Woman Owned Business Enterprise(s)
Commitment to Minority/Woman Owned Business Enterprise Participation
Minority/Woman Owned Business Enterprise(s) of Intent
Joint Venture Affidavit (if applicable)
Joint Venture Eligibility Form (if applicable)
Bid Bond
Certificate of Insurance

The following designated documents constitute that portion of the Contract Documents made available by the Notice of Invitation for Bids, but not included in the Bid Form and Submittal Package:

Notice of Invitation for Bids
Instructions to Bidders
Addenda (as applicable)
Equal Employment Opportunity Provisions (Appendix A and Appendix F)
Contract Form
General Contract Conditions
Special Contract Conditions
Performance and Payment Bond
Notice to Apparent Low Bidder
Notice to Proceed
Contractor's Certification of Payment Form
Final/Partial Lien Release Form
Final Receipt
Change Orders (as applicable)
Federal Requirements (as applicable)
Prevailing Wage Rate Schedule(s)
Technical Specifications
Contract Drawings
Accepted Shop Drawings

The undersigned bidder expressly assumes responsibility for the complete contents of these designated documents as bound together with the Bid Form and Submittal Package submitted herewith and designated the Contract Documents.

IN WITNESS WHEREOF, the undersigned bidder has signed personally or by duly authorized officer or agent and duly attested.

BIDDER:

Name:

By:

Title: Pres & CEO

ATTEST:

By:

[SEAL]

CITY AND COUNTY OF DENVER
DEPARTMENT OF PUBLIC WORKS

BID FORM

CONTRACT NO. 201846567
RIVER NORTH PARK

BIDDER Iron Woman Construction and Environmental Services, LLC
(Legal Name per Colorado Secretary of State)

TO: The Manager of Public Works
City and County of Denver
c/o Contract Administration
201 West Colfax, Dept. 614
Denver, Colorado 80202

The Undersigned Bidder, having examined the plans, technical specifications, and remainder of the proposed Contract Documents as designated and enumerated in the General and Special Contract Conditions and any and all addenda thereto; having investigated the location of and conditions affecting the proposed Work; and being acquainted with and fully understanding the extent and character of the Work covered by this bid, and all factors and conditions affecting or which may be affected by Work, HEREBY SUBMITS THIS BID, pursuant to an advertisement of a Notice of Invitation for Bids as published on **December 28, 2018**, to furnish all required materials, tools, appliances, equipment and plant; to perform all necessary labor and to undertake and complete: **CONTRACT NO. 201846567, RIVER NORTH PARK,** in Denver, Colorado, in full accordance with and conformity to the Plans, Technical Specifications, and Contract Documents hereto attached or by reference made a part hereof, at and for the following price(s) set forth on this Bid Form.

The following documents, which taken as a whole constitute the Contract Documents for this Project, and which are incorporated herein, by reference, were made available to the Bidder as provided in the Advertisement of Notice of Invitation for Bids, were received by the bidder, and form the basis for this bid:

Advertisement of Notice of Invitation for Bids
Instructions to Bidders
Commitment to M/WBE Participation
Article III, Divisions 1 and 3 of Chapter 28, D.R.M.C.
Bid Bond
Addenda (as applicable)
Equal Employment Opportunity Provisions (Appendix A and Appendix F)
Bid Form
Contract Form
General Contract Conditions
Special Contract Conditions
Performance and Payment Bond
Notice to Apparent Low Bidder
Notice to Proceed
Contractor's Certification of Payment Form
Final/Partial Lien Release Form
Final Receipt
Change Orders (as applicable)
Federal Requirements (as applicable)
Prevailing Wage Rate Schedule(s)
Technical Specifications
Contract Drawing
Accepted Shop Drawings
Certificate of Insurance

Schedule A—Festival Street

Item No.	Description and Price	Estimated Quantity	Estimated Cost
201	**Clearing and Grubbing** at the unit price of $ 21,024.21 per LUMP SUM.	1 L S	$ 21,024.21
202	**Removal of Concrete Pavement** at the unit price of $ 96.27 per SQUARE YARD.	7 SY	$ 675.27
202	**Removal of Asphalt Mat** at the unit price of $ 25.91 per SQUARE YARD.	663 SY	$ 17,178.33
202	**Removal of Fence** at the unit price of $ 5.19 per LINEAR FOOT.	270 LF	$ 1,401.30
202	**Removal of Wall** at the unit price of $ 40.78 per LINEAR FOOT.	20 LF	$ 815.60
202	**Removal of Structures and Obstruction** at the unit price of $ 11,763.67 per LUMP SUM.	1 LS	$ 11,763.67
203	**Unclassified Excavation** at the unit price of $ 23.56 per CUBIC YARD.	468 CY	$ 11,026.08
203	**Embankment Material (Complete In Place)** at the unit price of $ 37.45 per CUBIC YARD.	1,280 CY	$ 47,936.00
203	**Muck Excavation** at the unit price of $ 34.05 per CUBIC YARD.	50 CY	$ 1,702.50
203	**Combination Loader** at the unit price of $ 250.94 per HOUR.	8 HOUR	$ 2,007.52

Schedule A—Festival Street

Item No.	Description and Price	Estimated Quantity	Estimated Cost
203	**Potholing** at the unit price of $335.25 per HOUR.	4 HOUR	$1,341.00
207	**Topsoil** at the unit price of $33.35 per CUBIC YARD.	98 CY	~~$3,268.30~~ $3317.30 DA
208	**Rock Sock** at the unit price of $56.30 per EACH.	7 EACH	$394.10
208	**Silt Fence** at the unit price of $2.35 per LINEAR FOOT.	578 LF	$1,358.30
208	**Concrete Washout Structure** at the unit price of $1,805.63 per EACH.	1 EACH	$1,805.63
208	**Storm Drain Inlet Protection** at the unit price of $230.55 per EACH.	2 EACH	$461.10
208	**Vehicle Tracking Pad** at the unit price of $2,273.80 per EACH.	1 EACH	$2,273.80
208	**Erosion Control Supervisor** at the unit price of $108.22 per HOUR.	40 HOUR	$4328.80
210	**Adjust Manhole** at the unit price of $598.17 per EACH.	1 EACH	$598.17
210	**Modify Manhole** at the unit price of $598.17 per EACH.	1 EACH	$598.17
210	**Adjust Valve Box** at the unit price of $505.35 per EACH.	1 EACH	$505.35

Schedule A—Festival Street

Item No.	Description and Price	Estimated Quantity	Estimated Cost
210	**Adjust Valve Box (Special) (Sanitary Clean-out)** at the unit price of $505.25 per EACH.	1 EACH	$ 505.35
212	**Seeding (Native)** at the unit price of $10,504.42 per ACRE.	0.12 AC	$ ~~1,260.42~~ 1260.53 DA
250	**Environmental Health and Safety Management** at the unit price of $3340.21 per LUMP SUM.	1 LS	$ 3,340.21
250	**Health and Safety Officer** at the unit price of $102.34 per HOUR.	80 HOUR	$ 8,187.20
250	**Certified Asbestos Building Inspector** at the unit price of $117.63 per HOUR.	120 HOUR	$ 14,115.60
250	**Materials Sampling and Delivery** at the unit price of $1293.24 per EACH.	2 EACH	$ ~~1,293.24~~ 2587.88 DA
250	**Materials Handling (Stockpile)** at the unit price of $51.76 per CUBIC YARD.	100 CY	$ 5,176.00
250	**Haul Non-Hazardous Waste** at the unit price of $23.52 per CUBIC YARD.	468 CY	$ 11,026.08
304	**Aggregate Base Course (Class 6)** at the unit price of $47.37 per CUBIC YARD.	35 CY	$ 1,657.95
403	**Hot Mix Asphalt (Grading S) (75) (PG 64-22)** at the unit price of $119.13 per TON.	329 TON	$ 39,193.77

Schedule A—Festival Street

Item No.	Description and Price	Estimated Quantity	Estimated Cost
403	**Hot Mix Asphalt (Grading SX) (75) (PG 64-22)** at the unit price of $ 129.32 per TON.	219 TON	$ 28,321.08
411	**Emulsified Asphalt (Slow-Setting)** at the unit price of $ 8.37 per GALLON.	66 GAL	$ 553.74
608	**Concrete Sidewalk (6 Inch)** at the unit price of $ 93.55 per SQUARE YARD.	318 SY	$ 29,748.20
608	**Bituminous Sidewalk** at the unit price of $ 763.48 per TON.	2 TON	~~$ 1,527.88~~ 1527.76 DA ~~1527.96~~ DA
608	**Concrete Curb Ramp** at the unit price of $ 288.08 per SQUARE YARD.	8 SY	$ 2,304.64
609	**4" Mountable Curb** at the unit price of $ 44.23 per LINEAR FOOT.	557 LF	~~$ 44.23~~ 24,636.11 DA
609	**6" Curb and Gutter - 2' Catch Pan** at the unit price of $ 71.21 per LINEAR FOOT.	23 LF	$ 1,640.13
609	**Gutter (Special)** at the unit price of $ 109.22 per LINEAR FOOT.	534 LF	$ 58,323.48
609	**Curb Type 6 (Section M)** at the unit price of $ 44.06 per LINEAR FOOT.	38 LF	$ 1,674.28
614	**Sign Panel (Class I)** at the unit price of $ 1,176.31 per EACH.	2 EACH	$ 2,352.62

Schedule A—Festival Street

Item No.	Description and Price	Estimated Quantity	Estimated Cost
614	**Sign Post (2 x 2 Inch Tubing)** at the unit price of $ 970.45 per EACH.	2 EACH	$ 1,940.90
620	**Sanitary Facility** at the unit price of $ 3,176.03 per EACH.	1 EACH	$ 3,176.03
625	**Construction Surveying** at the unit price of $ 12,351.22 per LUMP SUM.	1 LS	$ 12,351.22
626	**Mobilization** at the unit price of $ 70,312.25 per LUMP SUM.	1 LS	$ 70,312.25
627	**24" Solid White Plastic Tape (Preformed Thermoplastic)** at the unit price of $ 117.63 per LINEAR FOOT.	10 LF	$ 1,176.30
630	**Traffic Control Inspection** at the unit price of $ 1,764.46 per DAY.	25 DAY	$ 44,111.50
630	**Traffic Control Management** at the unit price of $ 1,764.46 per DAY.	10 DAY	$ 17,644.60
630	**End of Roadway Barricade** at the unit price of $ 1,764.46 per EACH.	1 EACH	$ 1,764.46
630	**Traffic Cone** at the unit price of $ 58.81 per EACH.	10 EACH	$ 588.10
	Fifty (50) Total Bid Items for Schedule A Subtotal for Schedule A:		~~$ 523,663.49~~ $523,711.89 DA

Schedule B—River North Park

Item No.	Description and Price	Estimated Quantity	Estimated Cost
011100-1	**Mobilization** at the unit price of $189,371.23 per LUMP SUM.	1 LS	$ 189,371.23
014210-1	**CABI/AMS/MMP Supervisor (environmental oversight)** at the unit price of $ 91.25 per HOUR.	92 HR	$ 8,441.00
015000-1	**Temporary Fences & Barricades** at the unit price of $ 11.26 per LINEAR FOOT.	2,278 LF	$ 26,789.28
015001-1	**Traffic Control** at the unit price of $ 17,644.40 per LUMP SUM.	1 LS	$ 17,644.40
015731-1	**Storm Drainage & Erosion Sediment Control** at the unit price of $ 13,604.66 per LUMP SUM.	1 LS	$ 13,604.66
015731-2	**Silt Fence** at the unit price of $ 2.35 per LINEAR FOOT.	650 LF	$ 1,527.50
015731-3	**Storm Inlet Protection** at the unit price of $ 229.38 per EACH.	7 EA	$ 1,605.66
015731-4	**Vehicle Tracking Control** at the unit price of $ 2,364.38 per EACH.	1 EA	$ 2,364.38
015731-5	**Concrete Washout** at the unit price of $ 1805.63 per EACH.	1 EA	$ 1,805.63
015731-6	**Monthly Maintenance** at the unit price of $ 2940.75 per MONTH.	6 MO	$ 17,644.26
015731-7	**Street Sweeping** at the unit price of $ 158.80 per HOUR.	10 HR	$ 1,588.00

Schedule B—River North Park

Item No.	Description and Price	Estimated Quantity	Estimated Cost
015731-8	**Erosion Control Blanket** at the unit price of $ 6.98 per SQUARE YARD.	954 SY	$ 6,630.30
017123-1	**Construction Surveying** at the unit price of $ 279,960.24 per LUMP SUM.	1 LS	$ 279,960.24
020000-1	**Remove Concrete Paving (Haul/Dispose Off-Site)** at the unit price of $ 31.49 per CUBIC YARD.	40 CY	$ 1,259.60
020000-2	**Remove Concrete Paving (Salvage for Re-Installment)** at the unit price of $ 14.19 per CUBIC YARD.	194 CY	$ 2,752.86
020000-3	**Remove Concrete Walls** at the unit price of $ 115.27 per CUBIC YARD.	113 CY	$ 13,027.27
020000-4	**Remove Asphalt Paving** at the unit price of $ 26.25 per CUBIC YARD.	1,253 CY	$ 32,891.25
020000-5	**Remove Fence- Chain Link, inlcuding footings** at the unit price of $ 11.76 per LINEAR FOOT.	1,165 LF	$ 13,700.40
020000-6	**Remove Concrete Pan** at the unit price of $ 53.63 per CUBIC YARD.	48 CY	$ 2573.76
020000-7	**Remove Concrete Bollards** at the unit price of $ 32.81 per EACH.	29 EA	$ 951.49
020000-8	**Remove Metal Shed** at the unit price of $ 23,526.13 per LUMP SUM.	1 LS	$ 23,526.13

Item No.	Description and Price	Estimated Quantity	Estimated Cost
020000-9	**Salvage & Store Materials For Re-Use (brick, steel, furnishings)** at the unit price of $ 23,526.13 per LUMP SUM.	1 LS	$ 23,526.13
020000-10	**Remove Existing Trees +3" Caliper** at the unit price of $ 131.22 per EACH.	14 EA	$ 1,847.86
033000-1	**Concrete Retaining Wall at Electrical Enclosure** at the unit price of $ 1,848.88 per CUBIC YARD.	5 CY	$ 9,244.20
033000-2	**Concrete Retaining Wall at Landing** at the unit price of $ 1784.57 per CUBIC YARD.	21 CY	$ 37,476.37
033000-3	**Concrete Retaining Planter Wall at Landing** at the unit price of $ 1975.25 per CUBIC YARD.	2 CY	$ 3951.52
033000-4	**Concrete Retaining Wall at Makers Plaza** at the unit price of $ 1824.83 per CUBIC YARD.	7 CY	$ 12,773.81
033000-5	**Concrete Seat Wall- Lawn Area** at the unit price of $ 1848.28 per CUBIC YARD.	68 CY	$ 125,730.64
033000-6	**Concrete Seat Wall- Wood Bench Top** at the unit price of $ 1731.35 per CUBIC YARD.	20 CY	$ 34,627.00
033000-7	**Concrete Sloped Wall at Landing** at the unit price of $ 1678.43 per CUBIC YARD.	18 CY	$ 30,211.74

Item No.	Description and Price	Estimated Quantity	Estimated Cost
033000-8	**Concrete Sloped Wall at Play area** at the unit price of $ 1678 42 per CUBIC YARD.	18 CY	$ 30,211 56
033000-9	**Concrete Terraces at Landing** at the unit price of $ 1496 09 per CUBIC YARD.	35 CY	$ 52,363 15
033000-10	**Concrete Terraces at Play Area** at the unit price of $ 1496 27 per CUBIC YARD.	46 CY	$ 68,820 14
033000-11	**Concrete Terraces at Maker's Plaza** at the unit price of $ 1496 07 per CUBIC YARD.	6 CY	$ 8976 54
033000-12	**Curbs- Concrete Rollover Curb** at the unit price of $ 119 26 per LINEAR FOOT.	70 LF	$ 8397 20
033000-13	**Concrete Forebay Band** at the unit price of $ 131 53 per LINEAR FOOT.	21 LF	$ 2762 57
033000-14	**Concrete Band** at the unit price of $ 108 22 per LINEAR FOOT.	797 LF	$ 86,115 85
033000-15	**Concrete Vertical Edge Band** at the unit price of $ 225 61 per LINEAR FOOT.	227 LF	$ 51,227 09
033000-16	**Concrete Thickened Edge** at the unit price of $ 607 98 per CUBIC YARD.	40 CY	$ 24,319 20

Item No.	Description and Price	Estimated Quantity	Estimated Cost
033000-17	**Concrete Steps- Typical** at the unit price of $ 1042 04 per CUBIC YARD.	31 CY	$ 32,303 24
033000-18	**Concrete Steps- 2 Riser** at the unit price of $ 1042 04 per CUBIC YARD.	1 CY	$ 1042 04
033000-19	**Concrete Stairs at Maker's Plaza** at the unit price of $ 2272 45 per CUBIC YARD.	5 CY	$ 11,362 25
033000-20	**Playground Ramp** at the unit price of $ 1496 07 per CUBIC YARD.	2.5 CY	$ 3,740 23
033000-21	**Art Foundation- Telescope** at the unit price of $ 3010 47 per LUMP SUM.	1 LS	$ 3010 47
033000-22	**Art Foundation- Face** at the unit price of $ 3010 49 per LUMP SUM.	1 LS	$ 3010 49
033000-23	**Art Foundation- Tumbler** at the unit price of $ 3010 49 per LUMP SUM.	1 LS	$ 3010 49
033100-1	**Type A Luminaire Foundations** at the unit price of $ 1176 37 per EACH.	15 EA	$ 17,644 67
033100-2	**Type AA Luminaire Foundations** at the unit price of $ 1176 37 per EACH.	9 EA	$ 10,586 79
055200-1	**Handrail- at Stairs** at the unit price of $ 205 22 per LINEAR FOOT.	92 LF	$ 18,938 20

Schedule B—River North Park

Item No.	Description and Price	Estimated Quantity	Estimated Cost
055200-2	**Handrail-at Ramp** at the unit price of $ 205.82 per LINEAR FOOT.	116 LF	$ 23,878.60
055200-3	**Paver Restraint at Tree** at the unit price of $ 470.57 per EACH.	3 EA	$ 1,411.71
055200-4	**Electrical Enclosure- at Interstate Building** at the unit price of $ 9880.98 per EACH.	1 EA	$ 9,880.98
055200-5	**Electrical Enclosure- at EEB Building** at the unit price of $ 9963.32 per EACH.	1 EA	$ 9,963.32
055200-6	**Sidewalk Detectable Warning Panels** at the unit price of $ 176.40 per SQUARE FOOT.	10 SF	$ 1,764.40
061000-1	**Wood Bench Top at Landing** at the unit price of $ 62.25 per SQUARE FOOT.	181 SF	$ 11,267.25
128300-1	**Bench- TBW Landmark** at the unit price of $ 1,971.99 per EACH.	3 EA	$ 5915.94
128300-2	**Bench - TBW Park Bench** at the unit price of $ 1826.70 per EACH.	10 EA	$ 18,267.20
128300-3	**Bench - TBW Concrete Bench** at the unit price of $ 1,826.70 per EACH.	10 EA	$ 18,267.20
128300-4	**Bench - TBW Hanging Bench** at the unit price of $ 2663.80 per EACH.	2 EA	$ 5327.80

Schedule B—River North Park

Item No.	Description and Price	Estimated Quantity	Estimated Cost
128300-5	**Bench - Bin Block** at the unit price of $ 684.22 per EACH.	4 EA	$ 2739.23
128300-6	**Chairs - TBW I Beam Chaise** at the unit price of $ 4241.53 per EACH.	10 EA	$ 42,415.30
128300-7	**Chairs - TBW I Beam Chairs** at the unit price of $ 4194.87 per EACH.	16 EA	$ 67,118.24
128300-8	**Hitch Post - TBW Hammock Hitch** at the unit price of $ 1,920.10 per EACH.	4 EA	$ 7,680.40
128300-9	**Bike Racks** at the unit price of $ 4206.01 per EACH.	16 EA	$ 67,296.16
128300-10	**Bollard - Typical 6x6** at the unit price of $ 224.03 per EACH.	25 EA	$ 5602.25
128300-11	**Bollard - Typical 9x9** at the unit price of $ 224.03 per EACH.	4 EA	$ 896.35
128300-12	**Bollard - Removable** at the unit price of $ 224.03 per EACH.	15 EA	$ 3,361.35
128300-13	**Bollard - Powered** at the unit price of $ 1,992.66 per EACH.	6 EA	~~$ 1992.66~~ 11,955.96 DA
128300-14	**Bollard - Lighted** at the unit price of $ 1992.66 per EACH.	7 EA	$ 13,948.63
128300-15	**Site Feature- Pipe Islands** at the unit price of $ 61,305.61 per LUMP SUM.	1 LS	$ 61,305.61

Schedule B—River North Park

Item No.	Description and Price	Estimated Quantity	Estimated Cost
128300-16	**Bin Blocks-Seatwall** at the unit price of $ 32.23 per LINEAR FOOT.	1,158 LF	$ 37,785.54
128300-17	**Bin Blocks-Wall at Water Quality** at the unit price of $ 34.03 per LINEAR FOOT.	270 LF	$ 9185.10
128300-18	**Bin Blocks- Wall Bench** at the unit price of $ 38.25 per LINEAR FOOT.	36 LF	$ 1369.80
128300-19	**Skate Stops** at the unit price of $ 58.81 per EACH.	71 EA	$ 4175.51
128300-20	**Play Feature- Pipe Works Phone** at the unit price of $ 4059.80 per EACH.	2 EA	$ 8119.60
128300-21	**Play Feature- EEB Joist 3-D Balance Beam** at the unit price of $ 24,771.37 per EACH.	1 EA	$ 24,771.37
128300-22	**Dish** at the unit price of $ 30,452.80 per EACH.	1 EA	$ 30,452.80
128300-23	**Whirlwind** at the unit price of $ 6,504.11 per EACH.	1 EA	$ 6504.11
128300-24	**Jumper** at the unit price of $ 4,739.64 per EACH.	1 EA	$ 4,739.64
128300-25	**Concrete embankment slide** at the unit price of $ 23,526.13 per EACH.	1 EA	$ 23,526.13
260519-1	**Electrical Service- Park Equipment** at the unit price of $ 8539.22 per LUMP SUM.	1 LS	$ 8539.22

Item No.	Description and Price	Estimated Quantity	Estimated Cost
260519-2	**Electrical Service-Interstate Building** at the unit price of $ 6401.22 per LUMP SUM.	1 LS	$ 6,404.22
260519-3	**Electrical Service- EEB Building 1** at the unit price of $ 6,404.22 per LUMP SUM.	1 LS	$ 6,404.22
260519-4	**Electrical Service- EEB Building 2** at the unit price of $ 4269.22 per LUMP SUM.	1 LS	$ 4269.22
265619-1	**Type A Luminaires & Poles-Multi-Head Lights** at the unit price of $ 11,528.22 per EACH.	14 EA	$ 161,405.22
265619-2	**Type A Luminaires & Poles w/50A Receptacle-Multi-Head Lights** at the unit price of $ 11,528.22 per EACH.	1 EA	$ 11,528.22
265619-3	**Type AA Luminaires & Poles-Festival Street Lights** at the unit price of $ 7401.22 per EACH.	9 EA	$ ~~7401.22~~ 66,611.88
265619-4	**Type B Luminaires-Lighted Bollards** at the unit price of $ 1777.47 per EACH.	7 EA	$ 12,454.19
265619-5	**Type C Luminaires- In Grade Solar Lights** at the unit price of $ 370.07 per EACH.	33 EA	$ 12,212.31
265619-6	**Type E Luminaires- Tivoli String Light** at the unit price of $ 676.08 per EACH.	8 EA	$ 5408.44

Schedule B—River North Park

Item No.	Description and Price	Estimated Quantity	Estimated Cost
265619-7	**Type F Luminaires- Ground Mount Landscape Lights** at the unit price of $ 1636 [23] per EACH.	20 EA	$ 32,736 [60]
260533-1	**50 A Receptacle** at the unit price of $ 604 [22] per EACH.	8 EA	$ 4839 [36]
260533-2	**Receptacles on Interstate Building** at the unit price of $ 284 [66] per EACH.	4 EA	$ 1138 [64]
260533-3	**Receptacles on EEB Building 1** at the unit price of $ 379 [56] per EACH.	3 EA	$ 1138 [68]
262416-1	**Electrical Panels & Enclosures** at the unit price of $ 6,404 [22] per EACH.	2 EA	$ 12,809 [28]
260533-1	**Conduit/Wire** at the unit price of $ 113,866 [46] per LUMP SUM.	1 LS	$ 113,866 [46]
260500-1	**Installation/Labor** at the unit price of $ 142,991 [22] per LUMP SUM.	1 LS	$ 142,991 [22]
311100-1	**Clearing and Grubbing** at the unit price of $ 4080 [64] per ACRE.	4 AC	$ 16,322 [62]
312000-1	**Earthwork- Cut & Export** at the unit price of $ 20 [62] per CUBIC YARD.	4,751 CY	$ 97,965 [62]
312000-2	**Earthwork- Import** at the unit price of $ 27 [23] per CUBIC YARD.	6,058 CY	$ 164,959 [34]
320513-1	**CU Structural Soil** at the unit price of $ 178 [52] per CUBIC YARD.	104 CY	$ 18,571 [28]

Item No.	Description and Price	Estimated Quantity	Estimated Cost
321116-1	**Road Base @ 35th edge** at the unit price of $ 32.00 per CUBIC YARD.	136 CY	$ 4,368.32
321216-1	**Asphalt Pavement** at the unit price of $ 77.22 per SQUARE YARD.	190 SY	$ 14,818.00
321216-2	**Asphalt Curb (Temporary)** at the unit price of $ 19.23 per LINEAR FOOT.	348 LF	$ 6,935.64
321313-1	**Concrete Pavement: 6", gray, light broom finish, pedestrian** at the unit price of $ 9.50 per SQUARE FOOT.	15,380 SF	$ 146,110.00
321313-2	**Concrete Pavement: 8", gray, light broom finish, vehicular** at the unit price of $ 13.11 per SQUARE FOOT.	1,855 SF	$ 24,319.05
321313-3	**Concrete Pavement: 6", gray, tined finish, pedestrian** at the unit price of $ 11.85 per SQUARE FOOT.	15,529 SF	$ 184,018.65
321313-4	**Concrete Pavement: 8", gray, tined finish, vehicular** at the unit price of $ 14.23 per SQUARE FOOT.	6,938 SF	$ 99,352.14
321313-5	**Concrete Pavement: 6", gray, "sand" finish, pedestrian** at the unit price of $ 12.25 per SQUARE FOOT.	2,889 SF	$ 35,390.25
321313-6	**Concrete Pavement: 8", gray, "sand" finish, vehicular** at the unit price of $ 15.23 per SQUARE FOOT.	828 SF	$ 12,875.40

Schedule B—River North Park

Item No.	Description and Price	Estimated Quantity	Estimated Cost
321313-7	**Concrete Pavement: Texturize Existing Slab** at the unit price of $ 8.34 per SQUARE FOOT.	5543 SF	$ 46,339.62
321400-1	**Permeable Pavers** at the unit price of $ 17.57 per SQUARE FOOT.	6,295 SF	$ 110,603.15
321400-2	**Cobble Swale-Mortar-Set Pavers** at the unit price of $ 19.39 per SQUARE FOOT.	692 SF	$ 13,417.88
321540-1	**Crusher Fines Paving** at the unit price of $ 1.84 per SQUARE FOOT.	4,191 SF	$ 7711.44
321540-2	**Salvaged Conc. Slab in Crusher Fines Paving** at the unit price of $ 3.52 per SQUARE FOOT.	4,415 SF	$ 15,540.80
321816-1	**Poured In Place Rubber Play Surfacing** at the unit price of $ 78.40 per SQUARE FOOT.	145 SF	$ 11,368.00
321816-2	**Engineered Wood Fiber Play Surfacing** at the unit price of $ 3.59 per SQUARE FOOT.	2,390 SF	$ 8,580.10
323219-1	**MSE Wall- at EEB Building** at the unit price of $ 41.80 per FACE FOOT.	1,180 FF	$ 49,442.00
328000-1	**Irrigation System** at the unit price of $ 146,028.07 per LUMP SUM.	1 LS	$ 146,028.07

Item No.	Description and Price	Estimated Quantity	Estimated Cost
329113-1	**Landscape** at the unit price of $331,436.65 per LUMP SUM.	1 LS	$ 331,436.65
331416-1	**6" Ductile Iron Pipe** at the unit price of $60.38 per LINEAR FOOT.	45 LF	$ 2,717.10
331416-2	**Water- 6 inch Gate Valve** at the unit price of $1159.55 per EACH.	1 EA	$ 1,159.55
331416-3	**Water - 8 in DI** at the unit price of $52.25 per LINEAR FOOT.	587 LF	$ 30,676.63
331416-4	**Water - Fittings** at the unit price of $841.25 per EACH.	5 EA	$ 4,209.10
331416-5	**Water - 8 inch Gate Valve** at the unit price of $1682.27 per EACH.	2 EA	$ 3364.54
331416-6	**Water - Connection to Existing Water Line** at the unit price of $1917.58 per EACH.	1 EA	$ 1,917.58
331416-7	**Water - Disinfection & Testing** at the unit price of $4219.22 per LUMP SUM.	1 LS	$ 4219.22
331416-8	**Fire Line Stubouts** at the unit price of $12,049.30 per EACH.	3 EA	$ 36,147.20
331416-9	**Fire Hydrant Assembly** at the unit price of $7124.26 per EACH.	1 EA	$ 7,124.26
331416-10	**Water - Service Line Stubouts** at the unit price of $7051.23 per EACH.	3 EA	$ 21,156.23

Schedule B—River North Park

Item No.	Description and Price	Estimated Quantity	Estimated Cost
331416-11	**Water - Denver Water Hydrant Inspection Fee, Meter Setting** at the unit price of $ 5881.57 per LUMP SUM.	1 LS	$ 5881.57
331416-12 (new bid item)	**Water – 6" PVC** at the unit price of $ 62.21 per LINEAR FOOT.	5.8 LF	$ 362.18
333100-1	**Sanitary-Service Line Stubouts** at the unit price of $ 2509.21 per EACH.	2 EA	$ 5018.50
334400-1 (removed)			
334400-2	**Storm- 6" PVC Underdrain** at the unit price of $ 33.24 per LINEAR FOOT.	973 LF	$ 32,965.24
334400-3	**Storm- 8" PVC Underdrain** at the unit price of $ 52.60 per LINEAR FOOT.	165 LF	$ 8679.00
334400-4	**Landscape PVC Solid Underdrain** at the unit price of $ 45.37 per LINEAR FOOT.	68 LF	$ 3085.16
334400-5	**Landscape PVC Perforated Underdrain** at the unit price of $ 31.77 per LINEAR FOOT.	117 LF	$ 3,717.02
334400-6	**Clean-outs** at the unit price of $ 685.40 per EACH.	24 EA	$ 16,461.60
334400-7	**Storm-Sidewalk Chase** at the unit price of $ 3528.52 per EACH.	6 EA	$ 21173.52
334400-8	**Storm-Trench Drains** at the unit price of $ 176.44 per LINEAR FOOT.	21 LF	$ 3705.24

Schedule B—River North Park

Item No.	Description and Price	Estimated Quantity	Estimated Cost
334400-9	**Type C Inlets** at the unit price of $ 5183 CL per EACH.	1 EA	$ 5,183 CL
334400-10	**4' Dia Manholes** at the unit price of $ 3819 25 per EACH.	2 EA	$ 7639 25
334400-11	**Riprap** at the unit price of $ 105 CY per CUBIC YARD.	50 CY	$ 5284 50
334600-1	**Pond Sand Layer for Underdrains** at the unit price of $ 117 23 per CUBIC YARD.	25 CY	$ 2943 CY
334600-2	**Area/Landscape/Plaza Drains** at the unit price of $ 1208 42 per EACH.	5 EA	$ 6042 15

One Hundred Forty-Five (145) Total Bid Items for Schedule B
Subtotal for Schedule B: $ ~~4,330,060~~ 22

4,330,062.02 DK

Schedule A (Festival Street) Bid Items Subtotal (201 through 630 (50 bid items))	$ ~~523,663~~ 523,711.89 DA
Schedule B (River North Park) Bid Items Subtotal (011100-1 through 334600-2 (145 bid items))	$ ~~4,330,060~~ 4,330,062.02 DA
Bid Items Total Amount Schedule A plus Schedule B (195 bid items)	$ ~~4,853,723~~ 4,853,773.91 DA
Textura ® Fee from table on Page BF-3 (based on Bid Items Total Amount)	$ 9,100
Bid Items Total Amount plus Textura® Fee equals Total Bid Amount	$ ~~4,862,823~~ 4,862,873.91 DA

Total Bid Amount:
Four Million Eight hundred sixty-two thousand eight hundred
Forty-three dollars and seventy-one cents
Seventy DA ninety DA **Dollars ($** ~~4,862,823~~ 4,862,873.91 DA **)**

If the Manager mails a written Notice of Apparent Low Bidder, addressed to the Bidder's business address stated on this Bid Form, the Undersigned Bidder shall, in accordance with the Contract Documents, be ready to, and shall, within five (5) days after the date of the Notice: (i) execute the attached form of Contract in conformity with this bid; (ii) furnish the required proofs of insurance; and (iii) furnish the required bond or bonds in the sum of the full amount of this bid, executed by a surety company acceptable to the Manager.

The Fidelity and Deposit Company of Maryland, a corporation of the State of Illinois, is hereby offered as Surety on said bond. If such surety is not approved by the Manager, another and satisfactory surety company shall be furnished.

Enclosed with this bid is a bid guarantee, as defined in the attached Instructions to Bidders, in the amount of 5% of total bid. The Undersigned Bidder agrees that the entire amount of this bid guarantee is to be paid to and become the property of the City as liquidated damages, and not as a penalty, if: (i) the bid is considered to be the best by the City; (ii) the City notifies the Undersigned Bidder that it is the Apparent Low Bidder; and (iii) the Undersigned Bidder fails to execute the Contract in the form prescribed or to furnish the required bond and proofs of insurance, within five (5) days after the date of such notification.

The following persons, firms or corporations are interested with the Undersigned Bidder in this bid:

Name: Iron Woman Construction and Environmental Services, LLC Name: _____

Address: 5680 Emerson St Denver, CO 80216 Address: _____

If there are no such persons, firms, or corporations, please so state in the following space:

The Undersigned Bidder proposes to subcontract the following Work in accordance with General Contract Conditions, Title 5, SUBCONTRACTS, and represents that, to the greatest degree practical, all subcontractors known at the time of bid submittal have been identified.

Item of Work	Percent (%) of Total; Work	Proposed Subcontractor and Address
Removals	10	JKS
Concrete	10	Art of Concrete
Asphalt	10	P+H
Electrical	10	Pinnacle
Lanscaping	10	Western States
Survey	10	Infinity
Geotech	10	Martinez
Erosion Control	10	Western States.
Park	10	Recreation Plus

(Copy this page if additional room is required.)

DENVER
OFFICE OF ECONOMIC DEVELOPMENT

List of Proposed MWBE Bidders, Subcontractors, Suppliers (Manufacturers) or Brokers

Office of Economic Development
Division of Small Business Opportunity
Compliance Unit
201 W. Colfax Ave. Dept. 907
Denver, CO 80202
Phone: 720-913-1999
DSBO@denvergov.org

City & County of Denver Contract No.: 201846567

The undersigned Bidder proposes to utilize all listed firms. The following MWBE(s) firms listed are CURRENTLY certified by the City and County of Denver. Only the level of MWBE participation listed at the bid opening will count toward satisfaction of the project goal. Only bona fide commissions may be counted for Brokers. MWBE prime bidders must detail their bid information below. Please copy and attach this page to list additional MWBE.

Prime Bidder

Business Name: Iron Woman Construction & Environmental Services LLC		
Address: 5680 Emerson St Denver Co 80216	**Contact Person:** Frank Lombardi	
Type of Service: General Contractor Wet Utilities	**Dollar Amount: $:**	**Percent of Project:** 85%

Certified MWBE Prime Bidder

Business Name:		
Address:	**Contact Person:**	
Type of Service:	**Dollar Amount: $:**	**Percent of Project:**

Subcontractors, Suppliers Manufacturers or Brokers (check one box)

	Subcontractor (√) ✔		Supplier (√)		Manufacturer (√)		Broker (√)
Business Name: JKS							
Address: 747 Shurita Blvd		**Type of Service:** Removal					
Contact Person: Scott Brady		**Dollar Amount: $:** 30,000		**Percent of Project:** 1%			
	Subcontractor (√) ✔		Supplier (√)		Manufacturer (√)		Broker (√)
Business Name: Art of Concrete							
Address: 7845 E Harvard Ave		**Type of Service:** Concrete					
Contact Person: Karen Keys		**Dollar Amount: $:** 1,067,535		**Percent of Project:** 15%			
	Subcontractor (√)		Supplier (√)		Manufacturer (√)		Broker (√)
Business Name: P+H							
Address: 181 E 56th Ave		**Type of Service:**					
Contact Person:		**Dollar Amount: $:** 200,000		**Percent of Project:** 3%			

Rev 031816JE

Subcontractors, Suppliers Manufacturers or Brokers (check one box)			
Subcontractor (√) X	Supplier (√)	Manufacturer (√)	Broker (√)
Business Name: Infinity			
Address: 10465 Melody Drive	Type of Service: Survey		
Contact Person: Joe	Dollar Amount: $: 275,000	Percent of Project: 3%	
Subcontractor (√)	Supplier (√)	Manufacturer (√)	Broker (√)
Business Name: Martinez			
Address: 14828 W 6th Ave	Type of Service: Geo		
Contact Person:	Dollar Amount: $: 75,000	Percent of Project: 3%	
Subcontractor (√)	Supplier (√)	Manufacturer (√)	Broker (√)
Business Name:			
Address:	Type of Service:		
Contact Person:	Dollar Amount: $:	Percent of Project:	
Subcontractor (√)	Supplier (√)	Manufacturer (√)	Broker (√)
Business Name:			
Address:	Type of Service:		
Contact Person:	Dollar Amount: $:	Percent of Project:	
Subcontractor (√)	Supplier (√)	Manufacturer (√)	Broker (√)
Business Name:			
Address:	Type of Service:		
Contact Person:	Dollar Amount: $:	Percent of Project:	
Subcontractor (√)	Supplier (√)	Manufacturer (√)	Broker (√)
Business Name:			
Address:	Type of Service:		
Contact Person:	Dollar Amount: $:	Percent of Project:	
Subcontractor (√)	Supplier (√)	Manufacturer (√)	Broker (√)
Business Name:			
Address:	Type of Service:		
Contact Person:	Dollar Amount: $:	Percent of Project:	

Rev 031816JE

The undersigned Bidder hereby certifies that the aforementioned subcontractors and suppliers have full knowledge that their names have been offered as subcontractors and suppliers for the work, and the Bidder further certifies that the dollar amount of work to be performed by the aforementioned M/WBE(s) was furnished to the Bidder prior to the bid opening. The undersigned Bidder agrees that after the bid opening, it shall submit to the City an executed and completed W/MBE "Letter of Intent" in three working days (3) on each of its M/WBE subcontractors. The "Letter of Intent" form is contained in the Contract Documents.

The undersigned Bidder acknowledges the right of the City to reject any or all bids submitted, to waive informalities in bids and to re-advertise this Project for bids.

The undersigned certifies that it has carefully checked all works and figures and all statements made in these Bid Forms.

This bid is submitted upon the declaration that neither, I (we), nor, to the best of my (our) knowledge, none of the members of my (our) firm or company have either directly or indirectly entered into any agreement, participated in any collusion or otherwise taken any action in restraint of free competitive bidding in connection with this bid.

Business Address of Bidder: 5680 Emerson ST

City, State, Zip Code: Denver Co 80216

Telephone Number of Bidder: 303.399.5534 Fax No. N/A

Social Security or Federal Employer ID Number of Bidder: 81-0863272

Name and location of the last work of this kind herein contemplated upon which the Bidder was engaged:
27th Street Storm Interceptor for CCOD

For information relative thereto, please refer to:

Name: Frank Lombardi

Title: Estimator

Address: flombardi@ironwomancon.com

The undersigned acknowledges receipt, understanding, and full consideration of the following addenda to the Contract Documents:

Addenda Number 1 Date 1/28/19

Addenda Number 2 Date 2/1/19

Addenda Number _____ Date _____

Dated this _____ day of January, 2019.

Signature of Bidder:

If an Individual: _____ doing business as _____.

If a Partnership: _____

by: _____ General Partner.

If a Corporation: Iron Woman Construction & Environmental Services LLC

a _____ LLC _____ Corporation,

by: _____, its President.

Attest:

_____

Secretary (Corporate Seal)

If a Joint Venture, signature of all Joint Venture participants.

Firm: _____

Corporation ( ), Partnership ( ) or ( ) Limited Liability Company

By: _____ (If a Corporation)
Attest:

Title: _____

_____
Secretary (Corporate Seal)

Firm: _____

Corporation ( ), Partnership ( ) or ( ) Limited Liability Company

By: _____ (If a Corporation)
Attest:

Title: _____

_____
Secretary (Corporate Seal)

Firm: _____

Corporation ( ), Partnership ( ) or ( ) Limited Liability Company

By: _____ (If a Corporation)
Attest:

Title: _____

_____
Secretary (Corporate Seal)

DENVER
OFFICE OF ECONOMIC DEVELOPMENT

Office of Economic Development
Division of Small Business Opportunity
Compliance Unit
201 W. Colfax Ave. Dept. 907
Denver, CO 80202
Phone: 720-913-1999
DSBO@denvergov.org

COMMITMENT TO MWBE PARTICIPATION

The undersigned has satisfied the MWBE participant requirements in the following manner (Please check the appropriate box):

☑ The Bidder/Proposer is committed to the minimum 15 % **MWBE** utilization on the project, and will submit Letters of Intent (LOI) for each subcontractor/subconsultant listed in the Bid Forms as follows:
Hard Bids: **Three (3)** business days after the bid opening.
Request for Proposals/Qualifications: With the proposal when due.
Compliance Plans: With each task/work order

☐ The Bidder/Proposer is unable to meet the project goal of _____% **MWBE,** but is committed to a minimum of _____% **MWBE** utilization on the project. The Bidder/Proposer understands that they must submit a detailed statement of their good faith effort under sealed bid procedures, as a matter of responsiveness, or with initial proposals, under contract negotiation procedures; or no later than **three (3)** days after bid opening as a matter of responsibility as in accordance with DRMC Section 28-62 and 28-67 of Ordinance 85 to the Division of Small Business Opportunity.

☐ The Bidder/Proposer is a certified **MWBE** in good standing with the City and is committed to self-perform a minimum of _____% of the work on the contract.

Bidder/Proposer (Name of Firm): Iron Woman Construction & Environmental Services LLC

Firm's Representative (Please print): Frank Lombardi

Signature (Firm's Representative):

Title: Estimator

Address: 5680 Emerson St

City: Denver		State: CO	Zip: 80216
Phone: 303.399.5534	Fax: N/A	Email: flombardi@ironwomancon.com	

A copy of the MWBE Certification letter must be attached to each Letter of Intent (LOI).

DENVER
OFFICE OF ECONOMIC DEVELOPMENT

Office of Economic Development
Division of Small Business Opportunity
Compliance Unit
201 West Colfax Ave., Dept. 907
Denver, CO 80202
Phone: 720-913-1999

LETTER OF INTENT (LOI)

INSTRUCTIONS FOR COMPLETION & SUBMISSION:

- *All lines must be completed or marked N/A for Not Applicable*
- *Certification Letter must be submitted with LOI*
- *Submit the attached completed checklist with this letter*
- *Email to dsbo@denvergov.org ,*
- ***FOR RFPs and RFQs: LOIs should be included with Submittal***

Contract No.: 201846567	**Project Name:** River North Park

A. The Following Section is To Be Completed by the Bidder/Consultant
This Letter of Intent Must be Signed by the Bidder/Consultant and M/WBE, SBE, EBE or DBE

Name of Bidder/Consultant: Iron Woman Construction	Self-Performing: ☑ Yes ☐ No	Phone: 720-232-6707
Contact Person: Justin Moore	Email: Jmoore@ironwomancon.com	Fax:
Address: 5680 Emerson St.	City: Denver	State: CO Zip: 80216

B. The Following Section is To Be Completed by the M/WBE, SBE, EBE or DBE, at any Tier
This Letter of Intent Must be Signed by the M/WBE, SBE, EBE or DBE and Bidder/Consultant

Name of Certified Firm: The Art of Concrete LLC			Phone: 303-578-8389
Contact Person: Karen Keyes	Email: karen@theartofconcretellc.com		Fax: 720-255-2053
Address: 7845 E Harvard Ave	City: Denver		State: CO Zip: 802331

Please check the designation which applies to the certified firm.	M/WBE (√)	x	SBE (√)	x	EBE (√)	x	DBE (√)	x

Indirect Utilization: If this M/WBE, SBE, EBE or DBE is not a direct first tier subcontractor/subconsultant, supplier or broker to the Bidder/ Consultant, please indicate the name of the subcontractor/subconsultant, supplier or broker which is utilizing the participation of this firm:

A Copy of the M/WBE, SBE, EBE or DBE Letter of Certification must be Attached

Identify the scope of the work to be performed or supply item that will be provided by the M/WBE/SBE/DBE. **On unit price bids only, identify which bid line items the M/WBE/SBE/EBE/DBEs scope of work or supply corresponds to.**

Cast-in-place concrete

x	Subcontractor/Subconsultant (√)		Supplier (√)		Broker (√)

Bidder intends to utilize the aforementioned M/WBE, SBE, EBE or DBE for the Work/Supply described above. The cost of the work and percentage of the total subcontractor M/WBE, SBE, EBE or DBE bid amount is: $1,309,116.64	26.9%
Consultant intends to utilize the aforementioned M/WBE, SBE, EBE or DBE for the Work/Supply described above. The percentage of the work of the total sub consultant M/WBE, SBE, EBE or DBE will perform is:	N/A %
If the fee amount of the work to be performed is requested, the fee amount, is:	$ N/A

Bidder/Consultant's Signature: Justin Lambert	Date: 2-12-2019
Title: Estimator	
M/WBE, SBE, EBE or DBE or Self-Performing Firm's Signature:	Date: 02/08/2019
Title: President	

If the above named Bidder/Consultant is not determined to be the successful Bidder/Consultant, this **Letter of Intent** shall be null and void.

DENVER
OFFICE OF ECONOMIC DEVELOPMENT

Office of Economic Development
Division of Small Business Opportunity
Compliance Unit
201 West Colfax Ave., Dept. 907
Denver, CO 80202
Phone: 720-913-1999

LETTER OF INTENT (LOI)

INSTRUCTIONS FOR COMPLETION & SUBMISSION:

- *All lines must be completed or marked N/A for Not Applicable*
- *Certification Letter must be submitted with LOI*
- *Submit the attached completed checklist with this letter*
- *Email to dsbo@denvergov.org ,*
- ***FOR RFPs and RFQs: LOIs should be included with Submittal***

Contract No.: 201846567 **Project Name:** River North Park

A. The Following Section Is To Be Completed by the Bidder/Consultant
This Letter of Intent Must be Signed by the Bidder/Consultant and M/WBE, SBE, EBE or DBE

Name of Bidder/Consultant: Iron Woman Construction
Self-Performing: ☒ Yes ☐ No
Phone: 720-232-6707
Contact Person: Justin Moore
Email: Jmoore@ironwomancon.com
Fax:
Address: 5680 Emerson St
City: Denver
State: CO Zip: 80216

B. The Following Section Is To Be Completed by the M/WBE, SBE, EBE or DBE, at any Tier
This Letter of Intent Must be Signed by the M/WBE, SBE, EBE or DBE and Bidder/Consultant

Name of Certified Firm: JKS Industries, LLC
Phone: 303-238-0207
Contact Person: Jeffrey Knight
Email: jknight@jksindustries.net
Fax: 303-238-0452
Address: 747 Sheridan Blvd. #9A
City: Lakewood
State: CO Zip: 80214

Please check the designation which applies to the certified firm.	M/WBE (√)	✓	SBE (√)	✓	EBE (√)		DBE (√)	✓

Indirect Utilization: If this M/WBE, SBE, EBE or DBE is not a direct first tier subcontractor/subconsultant, supplier or broker to the Bidder/ Consultant, please indicate the name of the subcontractor/subconsultant, supplier or broker which is utilizing the participation of this firm:

A Copy of the M/WBE, SBE, EBE or DBE Letter of Certification must be Attached

Identify the scope of the work to be performed or supply item that will be provided by the M/WBE/SBE/DBE. **On unit price bids only, identify which bid line items the M/WBE/SBE/EBE/DBEs scope of work or supply corresponds to.**

Removals / Clearing + Grubing

Subcontractor/Subconsultant (√)		Supplier (√)		Broker (√)

Bidder intends to utilize the aforementioned M/WBE, SBE, EBE or DBE for the Work/Supply described above. The cost of the work and percentage of the total subcontractor M/WBE, SBE, EBE or DBE bid amount is:
$ 191,155.27 3.9% %

Consultant intends to utilize the aforementioned M/WBE, SBE, EBE or DBE for the Work/Supply described above. The percentage of the work of the total sub consultant M/WBE, SBE, EBE or DBE will perform is: N/A %
If the fee amount of the work to be performed is requested, the fee amount, is: $ N/A

Bidder/Consultant's Signature: [signature]
Date: 2-12-2019
Title: Estimator

M/WBE, SBE, EBE or DBE or Self-Performing Firm's Signature: [signature]
Date: 2/12/2019
Title: President

If the above named Bidder/Consultant is not determined to be the successful Bidder/Consultant, this **Letter of Intent** shall be null and void.

DENVER
OFFICE OF ECONOMIC DEVELOPMENT

Office of Economic Development
Division of Small Business Opportunity
Compliance Unit
201 West Colfax Ave., Dept. 807
Denver, CO 80202
Phone: 720-913-1999

LETTER OF INTENT (LOI)

INSTRUCTIONS FOR COMPLETION & SUBMISSION:

- *All lines must be completed or marked N/A for Not Applicable*
- *Certification Letter must be submitted with LOI*
- *Submit the attached completed checklist with this letter*
- *Email to dsbo@denvergov.org ,*
- *FOR RFPs and RFQs: LOIs should be included with Submittal*

Contract No.: 201846567 **Project Name:** RIVER NORTH PARK

A. The Following Section is To Be Completed by the Bidder/Consultant
This Letter of Intent Must be Signed by the Bidder/Consultant and M/WBE, SBE, EBE or DBE

Name of Bidder/Consultant: Iron Woman Construction	Self-Performing: ☑ Yes ☐ No	Phone: 720-232-6707	
Contact Person: Justin Moore	Email: Jmoore@Ironwomanco.com	Fax:	
Address: 5680 Emerson St	City: Denver	State: CO	Zip: 80216

B. The Following Section is To Be Completed by the M/WBE, SBE, EBE or DBE, at any Tier
This Letter of Intent Must be Signed by the M/WBE, SBE, EBE or DBE and Bidder/Consultant

Name of Certified Firm: P & H Equipment Inc.		Phone: 303-339-3191	
Contact Person: Hortensia Villano	Email: hortensia@phequipment.net	Fax:	
Address: 181 E 56th Ave. Suite 100	City: Denver	State: CO	Zip: 80216

Please check the designation which applies to the certified firm:	M/WBE (√)		SBE (√)	✓	EBE (√)		DBE (√)	

Indirect Utilization: If this M/WBE, SBE, EBE or DBE is not a direct first tier subcontractor/subconsultant, supplier or broker to the Bidder/ Consultant, please indicate the name of the subcontractor/subconsultant, supplier or broker which is utilizing the participation of this firm:

A Copy of the M/WBE, SBE, EBE or DBE Letter of Certification must be Attached

Identify the scope of the work to be performed or supply item that will be provided by the M/WBE/SBE/DBE. **On unit price bids only, identify which bid line items the M/WBE/SBE/EBE/DBEs scope of work or supply corresponds to.**

Asphalt paving, Concrete flatwork

✓	Subcontractor/Subconsultant (√)		Supplier (√)		Broker (√)

Bidder intends to utilize the aforementioned M/WBE, SBE, EBE or DBE for the Work/Supply described above. The cost of the work and percentage of the total subcontractor M/WBE, SBE, EBE or DBE bid amount is:

$ 136,409.50	2.8%
Consultant intends to utilize the aforementioned M/WBE, SBE, EBE or DBE for the Work/Supply described above. The percentage of the work of the total sub consultant M/WBE, SBE, EBE or DBE will perform is:	N/A %
If the fee amount of the work to be performed is requested, the fee amount, is:	$ N/A
Bidder/Consultant's Signature: [signature]	Date: 2-12-2019
Title: CFO Finance	
M/WBE, SBE, EBE or DBE or Self-Performing Firm's Signature: [signature]	Date: 2/11/2019
Title: REGULATORY MGR	

If the above named Bidder/Consultant is not determined to be the successful Bidder/Consultant, this Letter of Intent shall be null and void.

DENVER
OFFICE OF ECONOMIC DEVELOPMENT

Office of Economic Development
Division of Small Business Opportunity
Compliance Unit
201 West Colfax Ave., Dept. 907
Denver, CO 80202
Phone: 720-913-1999

LETTER OF INTENT (LOI)

INSTRUCTIONS FOR COMPLETION & SUBMISSION:

- *All lines must be completed or marked N/A for Not Applicable*
- *Certification Letter must be submitted with LOI*
- *Submit the attached completed checklist with this letter*
- *Email to dsbo@denvergov.org ,*
- *FOR RFPs and RFQs: LOIs should be included with Submittal*

Contract No.: 201846567	**Project Name:** River North Park (RiNo Park)

A. The Following Section is To Be Completed by the Bidder/Consultant
This Letter of Intent Must be Signed by the Bidder/Consultant and M/WBE, SBE, EBE or DBE

Name of Bidder/Consultant: Iron Woman Construction	**Self-Performing:** ☒ Yes ☐ No	**Phone:** 720-232-6707	
Contact Person: Justin Moore	**Email:** jmoore@ironwomancon.com	**Fax:**	
Address: 5680 Emerson St	**City:** Denver	**State:** CO	**Zip:** 80216

B. The Following Section is To Be Completed by the M/WBE, SBE, EBE or DBE, at any Tier
This Letter of Intent Must be Signed by the M/WBE, SBE, EBE or DBE and Bidder/Consultant

Name of Certified Firm: Infinity Solutions Inc.						**Phone:** 303-229-6885	
Contact Person: Joe Jimenez		**Email:** jjimenez@infinitysurvey.net				**Fax:** 866-505-7196	
Address: 10465 Melody Drive, Suite 225		**City:** Northglenn				**State:** CO	**Zip:** 80234
Please check the designation which applies to the certified firm.	**M/WBE (√)**	X	**SBE (√)**	X	**EBE (√)**		**DBE (√)** X

Indirect Utilization: If this M/WBE, SBE, EBE or DBE is not a direct first tier subcontractor/subconsultant, supplier or broker to the Bidder/ Consultant, please indicate the name of the subcontractor/subconsultant, supplier or broker which is utilizing the participation of this firm:

A Copy of the M/WBE, SBE, EBE or DBE Letter of Certification must be Attached

Identify the scope of the work to be performed or supply item that will be provided by the M/WBE/SBE/DBE. On unit price bids only, identify which bid line items the M/WBE/SBE/EBE/DBEs scope of work or supply corresponds to.

Construction & Land Surveying

X	**Subcontractor/Subconsultant (√)**		**Supplier (√)**		**Broker (√)**

Bidder intends to utilize the aforementioned M/WBE, SBE, EBE or DBE for the Work/Supply described above. The cost of the work and percentage of the total subcontractor M/WBE, SBE, EBE or DBE bid amount is:

$ 293,312 ±	6%
Consultant intends to utilize the aforementioned M/WBE, SBE, EBE or DBE for the Work/Supply described above. The percentage of the work of the total sub consultant M/WBE, SBE, EBE or DBE will perform is:	N/A %
If the fee amount of the work to be performed is requested, the fee amount, is:	$ N/A
Bidder/Consultant's Signature: [signature]	**Date:** 2-12-2019
Title: Estimator	
M/WBE, SBE, EBE or DBE or Self-Performing Firm's Signature: [signature]	**Date:** February 11, 2019
Title: President	

If the above named Bidder/Consultant is not determined to be the successful Bidder/Consultant, this Letter of Intent shall be null and void.

DENVER
OFFICE OF ECONOMIC DEVELOPMENT

Office of Economic Development
Division of Small Business Opportunity
Compliance Unit
201 West Colfax Ave., Dept. 907
Denver, CO 80202
Phone: 720-913-1999

LETTER OF INTENT (LOI)

INSTRUCTIONS FOR COMPLETION & SUBMISSION:

- *All lines must be completed or marked N/A for Not Applicable*
- *Certification Letter must be submitted with LOI*
- *Submit the attached completed checklist with this letter*
- *Email to dsbo@denvergov.org ,*
- ***FOR RFPs and RFQs: LOIs should be included with Submittal***

Contract No.: 201846567	**Project Name:** River North Park

A. The Following Section is To Be Completed by the Bidder/Consultant
This Letter of Intent Must be Signed by the Bidder/Consultant and M/WBE, SBE, EBE or DBE

Name of Bidder/Consultant: Iron Woman Construction	Self-Performing: ☑ Yes ☐ No	Phone: 720-232-6707
Contact Person: Justin Moore	Email: Jmoore e ironwoman co1.com	Fax:
Address: 5680 Emerson St	City: Denver	State: CO Zip: 80216

B. The Following Section is To Be Completed by the M/WBE, SBE, EBE or DBE, at any Tier
This Letter of Intent Must be Signed by the M/WBE, SBE, EBE or DBE and Bidder/Consultant

Name of Certified Firm: Legacy Traffic Management		Phone: 720.708.6334	
Contact Person: Jesse Leonard	Email: jesse@legacytraffic.net	Fax:	
Address: 957 Salida Way	City: Aurora	State: Co	Zip: 80011

Please check the designation which applies to the certified firm.	**M/WBE (√)**	X	**SBE (√)**	X	**EBE (√)**	X	**DBE (√)**	X

Indirect Utilization: If this M/WBE, SBE, EBE or DBE is not a direct first tier subcontractor/subconsultant, supplier or broker to the Bidder/ Consultant, please indicate the name of the subcontractor/subconsultant, supplier or broker which is utilizing the participation of this firm:

A Copy of the M/WBE, SBE, EBE or DBE Letter of Certification must be Attached

Identify the scope of the work to be performed or supply item that will be provided by the M/WBE/SBE/DBE. **On unit price bids only, identify which bid line items the M/WBE/SBE/EBE/DBEs scope of work or supply corresponds to.**

Traffic Control / Management

Subcontractor/Subconsultant (√)		**Supplier (√)**		**Broker (√)**

Bidder intends to utilize the aforementioned M/WBE, SBE, EBE or DBE for the Work/Supply described above. The cost of the work and percentage of the total subcontractor M/WBE, SBE, EBE or DBE bid amount is:	
$ 79,988 RO	1.64 %
Consultant intends to utilize the aforementioned M/WBE, SBE, EBE or DBE for the Work/Supply described above. The percentage of the work of the total sub consultant M/WBE, SBE, EBE or DBE will perform is:	N/A %
If the fee amount of the work to be performed is requested, the fee amount, is:	$ N/A

Bidder/Consultant's Signature: Frank Fontanelli	Date: 2-12-2019
Title: Estimator	
M/WBE, SBE, EBE or DBE or Self-Performing Firm's Signature: Jesse Leonard	Date: 02/11/2019
Title: Owner	

If the above named Bidder/Consultant is not determined to be the successful Bidder/Consultant, this **Letter of Intent** shall be null and void.

DENVER
OFFICE OF ECONOMIC DEVELOPMENT

Office of Economic Development
Division of Small Business Opportunity
Compliance Unit
201 West Colfax Ave., Dept. 907
Denver, CO 80202
Phone: 720-913-1999

LETTER OF INTENT (LOI)

INSTRUCTIONS FOR COMPLETION & SUBMISSION:

- *All lines must be completed or marked N/A for Not Applicable*
- *Certification Letter must be submitted with LOI*
- *Submit the attached completed checklist with this letter*
- *Email to dsbo@denvergov.org ,*
- ***FOR RFPs and RFQs: LOIs should be included with Submittal***

Contract No.: 201846567	**Project Name:** River North Park

A. The Following Section is To Be Completed by the Bidder/Consultant
This Letter of Intent Must be Signed by the Bidder/Consultant and M/WBE, SBE, EBE or DBE

Name of Bidder/Consultant: Iron Woman Construction	Self-Performing: ☑ Yes ☐ No	Phone: 720-232-6707
Contact Person: Justin Moore	Email: Jmoore@ironwomancon.com	Fax:
Address: 5680 Emerson St	City: Denver	State: CO Zip: 80216

B. The Following Section is To Be Completed by the M/WBE, SBE, EBE or DBE, at any Tier
This Letter of Intent Must be Signed by the M/WBE, SBE, EBE or DBE and Bidder/Consultant

Name of Certified Firm: Martinez Associates, Inc.		Phone: 303-459-2216
Contact Person: James Martinez	Email: jamesm@martineztesting.com	Fax: 303-482-2230
Address: 14828 W. 6th Avenue, Unit 9B	City: Golden	State: CO Zip: 80401

Please check the designation which applies to the certified firm.	**M/WBE (√)**	X	**SBE (√)**	X	**EBE (√)**		**DBE (√)**	X

Indirect Utilization: If this M/WBE, SBE, EBE or DBE is not a direct first tier subcontractor/subconsultant, supplier or broker to the Bidder/ Consultant, please indicate the name of the subcontractor/subconsultant, supplier or broker which is utilizing the participation of this firm:

A Copy of the M/WBE, SBE, EBE or DBE Letter of Certification must be Attached

Identify the scope of the work to be performed or supply item that will be provided by the M/WBE/SBE/DBE. **On unit price bids only, identify which bid line items the M/WBE/SBE/EBE/DBEs scope of work or supply corresponds to.**

QC Testing Services

Subcontractor/Subconsultant (√)		**Supplier (√)**		**Broker (√)**

Bidder intends to utilize the aforementioned M/WBE, SBE, EBE or DBE for the Work/Supply described above. The cost of the work and percentage of the total subcontractor M/WBE, SBE, EBE or DBE bid amount is:

$ 73,987.00	1.52 %

Consultant intends to utilize the aforementioned M/WBE, SBE, EBE or DBE for the Work/Supply described above. The percentage of the work of the total sub consultant M/WBE, SBE, EBE or DBE will perform is:	N/A %
If the fee amount of the work to be performed is requested, the fee amount, is:	$ N/A

Bidder/Consultant's Signature: [signature]	Date: 2-12-2019
Title: Estimator	
M/WBE, SBE, EBE or DBE or Self-Performing Firm's Signature: [signature]	Date: 2-9-19
Title: President	

If the above named Bidder/Consultant is not determined to be the successful Bidder/Consultant, this **Letter of Intent** shall be null and void.

Letter of Intent (LOI) Checklist

All lines must be completed or marked N/A for Not Applicable

Submit the attached completed checklist with this letter.

Completed ✓	
☐	Project Number & Project Name
☐	Section A: Name of Bidder/Consultant, Contact Person, Address, City, State, Zip, Phone, Email
☐	Section B: Name of Certified Firm, Contact Person, Address, City, State, Zip, Phone, Email
☐	Designation checked for MBE/WBE, SBE, EBE or DBE
☐	Indirect Utilization: Name of subcontractor/subconsultant, supplier or broker is indicated if using the participation of a 2nd tier subcontractor/subconsultant, supplier or broker.
☐	Scope of work performed or item supplied by M/WBE, SBE, EBE or DBE
☐	Line items performed, if line-item bid.
☐	Copy of M/WBE, SBE, EBE or DBE Letter of Certification Attached
☐	Designation checked for Subcontractor/Subconsultant, Supplier or Broker
	If project is a hard bid...
☐	Bidder has indicated dollar amount for value of work going to Subcontractor/ Subconsultant, Supplier or Broker
☐	Bidder has indicated percentage for value of work going to Subcontractor/ Subconsultant, Supplier or Broker
	If project is an RFP/RFQ...
☐	Consultant has indicated percentage for value of work going to Subcontractor/ Subconsultant, Supplier or Broker Name & contact name for MWBE.
☐	Fee amount if fee amount of work to be performed is requested.
☐	Bidder/Consultant's Signature, Title & Date
☐	M/WBE, SBE, EBE or DBE Firm's Signature, Title and Date

Select One ✓	SUBMITTED VIA... For Construction Hard Bids ONLY, Bidders are strongly urged to deliver the LOI via one of the methods below. (The preferred method is to scan/email completed forms to email address below. Delivery to any other point cannot be guaranteed timely delivery.)
☐	Email to DSBO@denvergov.org

The complete and accurate information that is required for the Letter of Intent is based on the following sections of the Ordinance 85: Section 28-63 and Section 28-68. Failure to complete this information on the Letter of Intent (LOI) may automatically deem a bid or proposal non-responsive.

DENVER
OFFICE OF ECONOMIC DEVELOPMENT

Joint Venture Affidavit

Office of Economic Development
Division of Small Business Opportunity
Compliance Unit
201 W. Colfax Ave. Dept. 907
Denver, CO 80202
Phone: 720-913-1999
DSBO@denvergov.org

The Undersigned swears that the foregoing statements are correct and include all material information necessary to identify and explain the terms and operation of our joint venture and the intended participation by each joint venturer in the undertaking. Further, the Undersigned covenant and agree to provide the City current, complete, and accurate information regarding actual joint venture work and the payment thereof and any proposed changes in any of the joint venture arrangements and to permit the audit and examination of the books, records, and files of the joint venture, by authorized representatives of the City or Federal funding agency, if applicable. Any material misrepresentation will be grounds for terminating any contract which may be awarded and for initialing action under Federal or State laws concerning false statements.

Name of Firm:

Print Name: | Title

Signature: | Date:

Notary Public

County of | State of | My Commission Expires:

Subscribed and sworn before me this

_____ day of _____, 20_____

Notary Seal

Notary Signature: _____

Notary Commission #: _____

Address: _____

Name of Firm:

Print Name: | Title

Signature: | Date:

Notary Public

County of | State of | My Commission Expires:

Subscribed and sworn before me this

_____ day of _____, 20_____

Notary Seal

Notary Signature: _____

Notary Commission #: _____

Address: _____

DENVER
OFFICE OF ECONOMIC DEVELOPMENT

JOINT VENTURE ELIGIBILITY FORM

Office of Economic Development
Division of Small Business Opportunity
Compliance Unit
201 W. Colfax Ave. Dept. 907
Denver, CO 80202
Phone: 720-913-1999
DSBO@denvergov.org

Joint Venture means an association of two (2) or more business enterprises to constitute a single business enterprise to perform a City construction or professional design and construction services contract for which purpose they combine their property, capital, efforts, skills and knowledge, and in which each joint venturer is responsible for a distinct, clearly defined portion of the work of the contract, performs a commercially useful function, and whose share in the capital contribution, control, management responsibilities, risks and profits of the joint venture are equal to its ownership interest. Joint ventures must have an agreement in writing specifying the terms and conditions of the relationships between the joint venturers and their relationship and responsibility to the contract.

The Division of Small Business Opportunity (DSBO) requires the following information be provided from participants of a prospective joint venture, to assist DSBO in evaluating the proposed joint venture. This Joint Venture Eligibility form and the Joint Venture Affidavit apply if SBEs, EBEs, MBEs, WBEs or DBEs participate in this joint venture.

Please return this form, the Joint Venture Affidavit, and a copy of your Joint Venture Agreement to: Division of Small Business Opportunity, 201 West Colfax Avenue, Denver, CO 80202, at least ten **(10) working days** prior to bid opening or proposal.

If you have questions regarding this process, please contact DSBO at 720-913-1999.

Joint Venture Information

Name:			Contact Person:
Address:			
City:	State:	Zip:	Phone:

Joint Venture Participants

Name:			Contact Person:
Address:			
City:	State:	Zip:	Phone:
% Ownership:	Certifying Entity:		Type Certification & Date: (S/E/M/W or DBE)
Type of Work for which Certification was granted:			
Name:			Contact Person:
Address:			
City:	State:	Zip:	Phone:
% Ownership:	Certifying Entity:		Type Certification & Date: (S/E/M/W or DBE)
Type of Work for which Certification was granted:			

General Information

SBE/EBE/MBE/WBE/DBE Initial Capital Contributions: $ %

Future capital contributions (explain requirements) (attach additional sheets if necessary):

Source of Funds for the SBE/EBE/MBE/WBE/DBE Capital Contributions:

Describe the portion of the work or elements of the business controlled by the SBE/EBE/MBE/WBE or DBE: (attach additional sheets if necessary)

Describe the portion of the work or elements of the business controlled by non-SBE/EBE/MBE/WBE or DBE: (attach additional sheets if necessary)

JOINT VENTURE ELIGIBILITY FORM

General information

Describe the SBE/EBE/MBE/WBE or DBE's involvement in the overall management of the joint venture (e.g., participation on a management committee or managing board voting rights, etc.) (attach additional sheets if necessary)
Describe the SBE/EBE/MBE/WBE or DBE's share in the profits of the joint venture:
Describe the SBE/EBE/MBE/WBE or DBE's share in the risks of the joint venture:
Describe there roles and responsibilities of each joint venture participant with respect to managing the joint venture (use additional sheets if necessary):
a. SBE/EBE/MBE/WBE or DBE joint venture participant:
b. Non- SBE/EBE/MBE/WBE or DBE joint venture participant:
Describe the roles and responsibilities of each joint venture participant with respect to operation of the joint venture (use additional sheets if necessary):
a. SBE/EBE/MBE/WBE or DBE joint venture participant:
b. Non- SBE/EBE/MBE/WBE or DBE joint venture participant:

Which firm will be responsible for accounting functions relative to the joint venture's business?

Explain what authority each party will have to commit or obligate the other to insurance and bonding companies, financing institutions, suppliers, subcontractors, and/or other parties?

Please provide information relating to the approximate number of management, administrative, support and non-management employees that will be required to operate the business and indicate whether they will be employees of the S/E/MWBE/DBE, non- S/E/MWBE/DBE or joint venture:

	Non- SBE/EBE/M/WBE/DBE	SBE/EBE/M/WBE/DBE	Joint Venture
Management			
Administrative			
Support			
Hourly Employees			

JOINT VENTURE ELIGIBILITY FORM

General Information

Please provide the name of the person who will be responsible for hiring employees for the joint venture.

Who will they be employed by?

Are any of the proposed joint venture employees currently employees of any of the joint venture partners?		Yes (√)		No (√)

If yes, please list the number and positions and indicate which firm currently employs the individual(s), (use additional sheets if necessary)

Number of employees		Position	Employed By

Attach a copy of the proposed joint venture agreement, promissory note or loan agreement (if applicable), and any and all written agreements between the joint venture partners.

List all other business relationships between the joint venture participants, including other joint venture agreements in which the parties are jointly involved.

If there are any significant changes in or pertaining to this submittal, the joint venture members must immediately notify the Division of Small Business Opportunity.

COMP-FRM-015

CITY AND COUNTY OF DENVER
DEPARTMENT OF PUBLIC WORKS

BID BOND

KNOW ALL MEN BY THESE PRESENTS:

THAT Iron Woman Construction & Environmental Services, LLC, as Principal, and Fidelity and Deposit Company of Maryland, a corporation organized and existing under and by virtue of the laws of the State of Maryland, and authorized to do business within the State of Colorado, as Surety, are held and firmly bound unto the City and County of Denver, Colorado, as Obligee, in full and just sum of Five Percent (5%) of Total Bid Amount Dollars, ($----------), lawful money of the United States, for the payment of which sum, well and truly to be made, we bind ourselves, our heirs, executors, administrators, successors and assigns, jointly and severally, firmly by these presents:

WHEREAS, the said Principal is herewith submitting its bid, dated January 31, 2019, for the construction of: **CONTRACT NO. 201846567, RIVER NORTH PARK,** as set forth in detail in the Contract Documents for the City and County of Denver, Colorado, and said Obligee has required as a condition for receiving said bid that the Principal deposit specified bid security in the amount of not less than five percent (5%) of the amount of said bid, as it relates to work to be performed for the City, conditioned that in event of failure of the Principal to execute the Contract, for such construction and furnish required Performance and Payment Bond if the contract is offered him that said sum be paid immediately to the Obligee as liquidated damages, and not as a penalty, for the Principal's failure to perform.

The condition of this obligation is such that if the aforesaid Principal shall, within the period specified therefore, on the prescribed form presented to him for signature, enter into a written contract with the Obligee in accordance with his bid as accepted and give Performance and Payment Bond with good and sufficient surety or sureties, upon the form prescribed by the Obligee, for the faithful performance and the proper fulfillment of said Contract, or in the event of withdrawal of said bid within the time specified, or upon the payment to the Obligee of the sum determined upon herein, as liquidated damages and not as penalty, in the event the Principal fails to enter into said contract and give such Performance and Payment Bond within the time specified, then this Obligation shall be null and void, otherwise to remain in full force and effect.

Signed, sealed and delivered this 31st day of January, 2019.

ATTEST

Darlene Craven

Secretary

Iron Woman Construction & Environmental Services, LLC

Principal

By

Title Shaun S. Egan, President & CEO

Fidelity and Deposit Company of Maryland

Surety

By

Darlene Krings, Attorney-in-Fact

Seal if Bidder is Corporation
(Attach Power-of-Attorney)

[SEAL]

ZURICH AMERICAN INSURANCE COMPANY
COLONIAL AMERICAN CASUALTY AND SURETY COMPANY
FIDELITY AND DEPOSIT COMPANY OF MARYLAND
POWER OF ATTORNEY

KNOW ALL MEN BY THESE PRESENTS: That the ZURICH AMERICAN INSURANCE COMPANY, a corporation of the State of New York, the COLONIAL AMERICAN CASUALTY AND SURETY COMPANY, a corporation of the State of Maryland, and the FIDELITY AND DEPOSIT COMPANY OF MARYLAND a corporation of the State of Maryland (herein collectively called the "Companies"), by **DAVID MCVICKER, Vice President,** in pursuance of authority granted by Article V, Section 8, of the By-Laws of said Companies, which are set forth on the reverse side hereof and are hereby certified to be in full force and effect on the date hereof, do hereby nominate, constitute, and appoint **Russell D. LEAR, Kristen PEREIRO, Dulce R. HUGGINS, Darlene KRINGS, K'Anne E. VOGEL, Kelly T. URWILLER, Royal R. LOVELL, Wesley J. BUTORAC and Steve J. BLOHM, all of GREELEY, Colorado, EACH** its true and lawful agent and Attorney-in-Fact, to make, execute, seal and deliver, for, and on its behalf as surety, and as its act and deed: **any and all bonds and undertakings,** and the execution of such bonds or undertakings in pursuance of these presents, shall be as binding upon said Companies, as fully and amply, to all intents and purposes, as if they had been duly executed and acknowledged by the regularly elected officers of the ZURICH AMERICAN INSURANCE COMPANY at its office in New York, New York., the regularly elected officers of the COLONIAL AMERICAN CASUALTY AND SURETY COMPANY at its office in Owings Mills, Maryland., and the regularly elected officers of the FIDELITY AND DEPOSIT COMPANY OF MARYLAND at its office in Owings Mills, Maryland., in their own proper persons.

The said Vice President does hereby certify that the extract set forth on the reverse side hereof is a true copy of Article V, Section 8, of the By-Laws of said Companies, and is now in force.

IN WITNESS WHEREOF, the said Vice-President has hereunto subscribed his/her names and affixed the Corporate Seals of the said **ZURICH AMERICAN INSURANCE COMPANY, COLONIAL AMERICAN CASUALTY AND SURETY COMPANY, and FIDELITY AND DEPOSIT COMPANY OF MARYLAND,** this 31st day of January, A.D. 2018.

ATTEST:

ZURICH AMERICAN INSURANCE COMPANY
COLONIAL AMERICAN CASUALTY AND SURETY COMPANY
FIDELITY AND DEPOSIT COMPANY OF MARYLAND

By: _____
Assistant Secretary
Dawn E. Brown

_____
Vice President
David McVicker

State of Maryland
County of Baltimore

On this 31st day of January, A.D. 2018, before the subscriber, a Notary Public of the State of Maryland, duly commissioned and qualified, **DAVID MCVICKER, Vice President, and DAWN E. BROWN, Assistant Secretary,** of the Companies, to me personally known to be the individuals and officers described in and who executed the preceding instrument, and acknowledged the execution of same, and being by me duly sworn, deposeth and saith, that he/she is the said officer of the Company aforesaid, and that the seals affixed to the preceding instrument are the Corporate Seals of said Companies, and that the said Corporate Seals and the signature as such officer were duly affixed and subscribed to the said instrument by the authority and direction of the said Corporations.

IN TESTIMONY WHEREOF, I have hereunto set my hand and affixed my Official Seal the day and year first above written.

_____
Constance A. Dunn, Notary Public
My Commission Expires: July 9, 2019

POA-F 020-5340A

DENVER
OFFICE OF ECONOMIC DEVELOPMENT

Office of Economic Development
Division of Small Business Opportunity
201 W. Colfax Ave, Dept. 907
Denver, CO 80202
p: 720.913.1999
f: 720.913.1809
www.denvergov.org/dsbo

Diversity and Inclusiveness * in City Solicitations Information Request Form

Type in your response, print out, sign and date; or print out and complete manually. Please print legibly.

Denver Executive Order No. 101 establishes strategies between the City and private industry to use diversity and inclusiveness to promote economic development in the City and County of Denver and to encourage more businesses to compete for City contracts and procurements. The Executive Order requires, among other things, the collection of certain information regarding the practices of the City's contractors and consultants toward diversity and inclusiveness and encourages/requires City agencies to include diversity and inclusiveness policies in selection criteria where legally permitted in solicitations for City services or goods.

Answer each question below. Missing or incomplete responses will be recorded as "no", "not applicable", or "none". A proposal or response to a solicitation by a contractor/consultant that does not include this completed form shall be deemed non-responsive and rejected.

Business Email Address: _____

Please include the Email address of the contact person facilitating this solicitation for the City and County of Denver: flombardi@ironwomancon.com

Agency Name:

__Arts and Venue	__Purchasing Division	__Sheriff Department
__Auditor Office	__Human Services	__Technology Services
__Community Planning	__Economic Development	__Other
__Denver International Airport	__Parks and Recreation	
__Environmental Health	__Police Department	
__Fire Department	__Public Works	

Project Name: River North Park
BID / RFP No.: 201846567
Name of Contractor/Consultant: Iron Woman Construction & Environmental Services LLc
What industry is your business? Underground Utilities,Environmental,Trucking & Mining
Address:
5680 Emerson St
Denver Co 80216

Business Phone No.: 303.399.5534
Business Facsimile No.: _____

1. How many employees does your company employ?

☐ 1-10 ☐ 51-100
☐ 11-50 ☑ over 100

1.1. How many of your company's employees are:

Full-time 100% Part-Time _____

2. Do you have a Diversity and Inclusiveness Program? ☑ Yes ☐ No

If No, and your company size is less than 10 employees continue to question 11. Complete and sign the form.

If Yes, does it address:

2.1 Employment and retention?	☑ Yes	☐ No
2.2 Procurement and supply chain activities?	☑ Yes	☐ No
2.3 Customer service?	☑ Yes	☐ No

3. Provide a detailed narrative of your company's diversity and inclusiveness principles and programs. This may include, for example, (i) diversity and inclusiveness employee training programs, equal opportunity policies, and the budget amount spent on an annual basis for workplace diversity; or (ii) diversity and inclusiveness training and information to improve customer service.

See Attached

4. Does your company regularly communicate its diversity and inclusiveness policies to employees?

If Yes, how does your company regularly communicate its diversity and inclusiveness policies to employees? (select all that apply)

☑ Employee Training
☐ Pamphlets
☐ Public EEO postings
☑ Other
☐ Not Applicable

5. If you responded that you do not have a diversity and inclusiveness program, describe any plans your company may have to adopt such a program.

6. How often do you provide training in diversity and inclusiveness principles?

☐ Monthly ☑ Annually
☐ Quarterly ☐ Not Applicable ☐ Other_____

6.1 What percentage of the total number of employees generally participate?

☑ 0 – 25% ☐ 51 – 75%
☐ 26 – 50% ☐ 76 – 100% ☐ Not Applicable

7. State how you achieve diversity and inclusiveness in supply and procurement activities. This may include, for example, narratives of training programs, equal opportunity policies, diversity or inclusiveness partnership programs, mentoring and outreach programs, and the amount and description of budget spent on an annual basis for procurement and supplier diversity and inclusiveness.

See Attached

8. Do you have a diversity and inclusiveness committee? ☑ Yes ☐ No

8.1 If Yes, how often does it meet?

☐ Monthly ☑ Annually ☐ No Committee
☐ Quarterly ☐ Other _____

8.2 If you responded that you do not have a diversity and inclusiveness committee, describe any plans your company may have to establish such a committee.

9. Do you have a budget for diversity and inclusiveness efforts? ☑ Yes ☐ No

10. Does your company integrate diversity and inclusion competencies into executive/manager performance evaluation plans? ☑ Yes ☐ No

11. Would you like information detailing how to implement a Diversity and Inclusiveness program?

☐ Yes ☑ No

If yes, please email XO101@denvergov.org.

I attest that the information represented herein is true, correct and complete, to the best of my knowledge.

Signature of Person Completing Form — Date: 2-7-19

Frank Lombardi
Printed Name of Person Completing Form

NOTE: Attach additional sheets or documentation as necessary for a complete response.

*"Diversity and inclusiveness program" means a program that invites values, perspectives and contributions of people from diverse backgrounds, and integrates diversity into its hiring and retention policies, training opportunities, and business development methods to provide an equal opportunity for each person to participate, contribute, and succeed within the organization's workplace. "Diversity" encompasses a wide variety of human differences, including differences such as race, age, gender, gender identity, sexual orientation, ethnicity, physical disabilities, appearance, historically underutilized and disadvantaged persons, as well as social identities such as religion, marital status, socio-economic status, lifestyle, education, parental status, geographic background, language ability, and veteran status."

DIVERSITY POLICY

Iron Woman Construction and Environmental Services, LLC (the Company) is committed to fostering, cultivating and preserving a culture of diversity and inclusion.

Our human capital is the most valuable asset we have. The collective sum of the individual differences, life experiences, knowledge, inventiveness, innovation, self-expression, unique capabilities and talent that our employees invest in their work represents a significant part of not only our culture, but our reputation and company's achievement as well.

We embrace and encourage our employees' differences in age, color, disability, ethnicity, family or marital status, gender identity or expression, language, national origin, physical and mental ability, political affiliation, race, religion, sexual orientation, socio-economic status, veteran status, and other characteristics that make our employees unique.

The Company's diversity initiatives are applicable—but not limited—to our practices and policies on recruitment and selection; compensation and benefits; professional development and training; promotions; transfers; social and recreational programs; layoffs; terminations; and the ongoing development of a work environment built on the premise of gender and diversity equity that encourages and enforces:

- Respectful communication and cooperation between all employees.
- Teamwork and employee participation, permitting the representation of all groups and employee perspectives.
- Work/life balance through flexible work schedules to accommodate employees' varying needs.
- Employer and employee contributions to the communities we serve to promote a greater understanding and respect for the diversity.

All employees of The Company have a responsibility to treat others with dignity and respect at all times. All employees are expected to exhibit conduct that reflects inclusion during work, at work functions on or off the work site, and at all other company-sponsored and participative events. All employees are also required to attend and complete annual diversity awareness training to enhance their knowledge to fulfill this responsibility.

Any employee found to have exhibited any inappropriate conduct or behavior against others may be subject to disciplinary action.

Employees who believe they have been subjected to any kind of discrimination that conflicts with the company's diversity policy and initiatives should seek assistance from a supervisor or an HR representative.

CITY AND COUNTY OF DENVER

STATE OF COLORADO

DENVER
THE MILE HIGH CITY

DEPARTMENT OF PUBLIC WORKS

Bid Documents Package

Contract Number: 201846567

River North Park

December 28, 2018

CITY AND COUNTY OF DENVER
DEPARTMENT OF PUBLIC WORKS

TABLE OF CONTENTS FOR CONTRACT DOCUMENTS

BID FORM AND SUBMITTAL PACKAGE — **PAGE**

Bid Form and Submittal Package (bound separately and attached as part of these Bid Documents)

Table of Contents	BF-1
Bidder's Checklist	BF-2 through BF-3
Bid Form and Submittal Package Acknowledgment Form	BF-4 through BF-5
Bid Form	BF-6 through BF-8
List of Proposed Minority and Woman Business Enterprise(s)	BF-9 through BF-12
Commitment to Minority and Woman Business Enterprise Participation	BF-13
Minority and Woman Business Enterprise Letter(s) of Intent & Checklist	BF-14 through BF-15
Joint Venture Affidavit	BF-16
Joint Venture Eligibility Form	BF-17 through BF-19
Bid Bond	BF-20
Diversity and Inclusiveness in City Solicitations Form	BF-21 through BF-24

BID DOCUMENTS

Table of Contents	BDP-1
Statement of Quantities	SQ-1 through SQ-11
Notice of Invitation for Bids	BDP-2 through BDP-3
Instructions to Bidders	BDP-4 through BDP-15
Equal Employment Opportunity Provisions Appendix A Appendix F	BDP-16 through BDP-25
Contract Form	BDP-26 through BDP-30
Index of the General Contract Conditions	BDP-31 through BDP-35
Special Contract Conditions	BDP-36 through BDP-44
Final/Partial Release and Certificate of Payment Forms (Samples)	BDP–39 through BDP-45
Performance and Payment Bond Form	BDP-46 through BDP-47
Performance and Payment Bond Surety Authorization letter (Sample)	BDP - 48
Notice to Apparent Low Bidder (Sample)	BDP-49 through BDP-50
Notice To Proceed (Sample)	BDP-51
Certificate of Contract Release (Sample)	BDP-52
Prevailing Wage Rate Schedule	6 pages
Technical Specifications (Festival Street)	142 pages
Technical Specifications (River North Park)	416 pages
Contract Drawings (Festival Street)	25 pages
Contract Drawings (River North Park)	77 pages

DENVER
THE MILE HIGH CITY

CITY AND COUNTY OF DENVER
DEPARTMENT OF PUBLIC WORKS

STATEMENT OF QUANTITIES—Schedule A (Festival Street)

Item No.	Description	Estimated	Quantity
201	Clearing and Grubbing	1	L S
202	Removal of Concrete Pavement	7	SY
202	Removal of Asphalt Mat	663	SY
202	Removal of Fence	270	LF
202	Removal of Wall	20	LF
202	Removal of Structures and Obstruction	1	LS
203	Unclassified Excavation	468	CY
203	Embankment Material (Complete In Place)	1,280	CY
203	Muck Excavation	50	CY
203	Combination Loader	8	HOUR
203	Potholing	4	HOUR
207	Topsoil	98	CY
208	Rock Sock	7	EACH
208	Silt Fence	578	LF
208	Concrete Washout Structure	1	EACH
208	Storm Drain Inlet Protection	2	EACH
208	Vehicle Tracking Pad	1	EACH
208	Erosion Control Supervisor	40	HOUR
210	Adjust Manhole	1	EACH

DENVER
THE MILE HIGH CITY

CITY AND COUNTY OF DENVER
DEPARTMENT OF PUBLIC WORKS

STATEMENT OF QUANTITIES—Schedule A (Festival Street)

Item No.	Description	Estimated	Quantity
210	Modify Manhole	1	EACH
210	Adjust Valve Box	1	EACH
210	Adjust Valve Box (Special) (Sanitary Clean-out)	1	EACH
212	Seeding (Native)	0.12	AC
250	Environmental Health and Safety Management	1	L S
250	Health and Safety Officer	80	HOUR
250	Certified Asbestos Building Inspector	120	HOUR
250	Materials Sampling and Delivery	2	EACH
250	Materials Handling (Stockpile)	100	CY
250	Haul Non-Hazardous Waste	468	CY
304	Aggregate Base Course (Class 6)	35	CY
403	Hot Mix Asphalt (Grading S) (75) (PG 64-22)	329	TON
403	Hot Mix Asphalt (Grading SX) (75) (PG 64-22)	219	TON
411	Emulsified Asphalt (Slow-Setting)	66	GAL
608	Concrete Sidewalk (6 Inch)	318	SY
608	Bituminous Sidewalk	2	TON
608	Concrete Curb Ramp	8	SY
609	4" Mountable Curb	557	LF
609	6" Curb and Gutter - 2' Catch Pan	23	LF

DENVER
THE MILE HIGH CITY

CITY AND COUNTY OF DENVER
DEPARTMENT OF PUBLIC WORKS

STATEMENT OF QUANTITIES—Schedule A (Festival Street)

Item No.	Description	Estimated	Quantity
609	Gutter (Special)	534	LF
609	Curb Type 6 (Section M)	38	LF
614	Sign Panel (Class I)	2	EACH
614	Sign Post (2 x 2 Inch Tubing)	2	EACH
620	Sanitary Facility	1	EACH
625	Construction Surveying	1	L S
626	Mobilization	1	L S
627	24" Solid White Plastic Tape (Preformed Thermoplastic)	10	LF
630	Traffic Control Inspection	25	DAY
630	Traffic Control Management	10	DAY
630	End of Roadway Barricade	1	EACH
630	Traffic Cone	10	EACH

DENVER
THE MILE HIGH CITY

CITY AND COUNTY OF DENVER
DEPARTMENT OF PUBLIC WORKS

STATEMENT OF QUANTITIES—Schedule B (River North Park)

Item No.	Description	Estimated	Quantity
011100-1	Mobilization	1	LS
014210-1	CABI/AMS/MMP Supervisor (environmental oversight)	92	HR
015000-1	Temporary Fences & Barricades	2,278	LF
015001-1	Traffic Control	1	LS
015731-1	Storm Drainage & Erosion Sediment Control	1	LS
015731-2	Silt Fence	650	LF
015731-3	Storm Inlet Protection	7	EA
015731-4	Vehicle Tracking Control	1	EA
015731-5	Concrete Washout	1	EA
015731-6	Monthly Maintenance	6	MO
015731-7	Street Sweeping	10	HR
015731-8	Erosion Control Blanket	954	SY
017123-1	Construction Surveying	1	LS
020000-1	Remove Concrete Paving (Haul/Dispose Off-Site)	40	CY
020000-2	Remove Concrete Paving (Salvage for Re-Installment)	194	CY
020000-3	Remove Concrete Walls	113	CY
020000-4	Remove Asphalt Paving	1,253	CY
020000-5	Remove Fence- Chain Link, inlcuding footings	1,165	LF
020000-6	Remove Concrete Pan	48	CY

DENVER
THE MILE HIGH CITY

CITY AND COUNTY OF DENVER
DEPARTMENT OF PUBLIC WORKS

STATEMENT OF QUANTITIES—Schedule B (River North Park)

Item No.	Description	Estimated	Quantity
020000-7	Remove Concrete Bollards	29	EA
020000-8	Remove Metal Shed	1	LS
020000-9	Salvage & Store Materials For Re-Use (brick, steel, furnishings)	1	LS
020000-10	Remove Existing Trees +3" Caliper	14	EA
033000-1	Concrete Retaining Wall at Electrical Enclosure	5	CY
033000-2	Concrete Retaining Wall at Landing	21	CY
033000-3	Concrete Retaining Planter Wall at Landing	2	CY
033000-4	Concrete Retaining Wall at Makers Plaza	7	CY
033000-5	Concrete Seat Wall- Lawn Area	68	CY
033000-6	Concrete Seat Wall- Wood Bench Top	20	CY
033000-7	Concrete Sloped Wall at Landing	18	CY
033000-8	Concrete Sloped Wall at Play area	18	CY
033000-9	Concrete Terraces at Landing	35	CY
033000-10	Concrete Terraces at Play Area	46	CY
033000-11	Concrete Terraces at Maker's Plaza	6	CY
033000-12	Curbs- Concrete Rollover Curb	70	LF
033000-13	Concrete Forebay Band	21	LF
033000-14	Concrete Band	797	LF

DENVER
THE MILE HIGH CITY

CITY AND COUNTY OF DENVER
DEPARTMENT OF PUBLIC WORKS

STATEMENT OF QUANTITIES—Schedule B (River North Park)

Item No.	Description	Estimated	Quantity
033000-15	Concrete Vertical Edge Band	227	LF
033000-16	Concrete Thickened Edge	40	CY
033000-17	Concrete Steps- Typical	31	CY
033000-18	Concrete Steps- 2 Riser	1	CY
033000-19	Concrete Stairs at Maker's Plaza	5	CY
033000-20	Playground Ramp	2.5	CY
033000-21	Art Foundation- Telescope	1	LS
033000-22	Art Foundation- Face	1	LS
033000-23	Art Foundation- Tumbler	1	LS
033100-1	Type A Luminaire Foundations	15	EA
033100-2	Type AA Luminaire Foundations	9	EA
055200-1	Handrail- at Stairs	92	LF
055200-2	Handrail-at Ramp	116	LF
055200-3	Paver Restraint at Tree	3	EA
055200-4	Electrical Enclosure- at Interstate Building	1	EA
055200-5	Electrical Enclosure- at EEB Building	1	EA
055200-6	Sidewalk Detectable Warning Panels	10	SF
061000-1	Wood Bench Top at Landing	181	SF
128300-1	Bench - TBW Landmark	3	EA

DENVER
THE MILE HIGH CITY

CITY AND COUNTY OF DENVER
DEPARTMENT OF PUBLIC WORKS

STATEMENT OF QUANTITIES—Schedule B (River North Park)

Item No.	Description	Estimated	Quantity
128300-2	Bench - TBW Park Bench	10	EA
128300-3	Bench - TBW Concrete Bench	10	EA
128300-4	Bench - TBW Hanging Bench	2	EA
128300-5	Bench - Bin Block	4	EA
128300-6	Chairs - TBW I Beam Chaise	10	EA
128300-7	Chairs - TBW I Beam Chairs	16	EA
128300-8	Hitch Post - TBW Hammock Hitch	4	EA
128300-9	Bike Racks	16	EA
128300-10	Bollard - Typical 6x6	25	EA
128300-11	Bollard - Typical 9x9	4	EA
128300-12	Bollard - Removable	15	EA
128300-13	Bollard - Powered	6	EA
128300-14	Bollard - Lighted	7	EA
128300-15	Site Feature- Pipe Islands	1	LS
128300-16	Bin Blocks-Seatwall	1,158	LF
128300-17	Bin Blocks-Wall at Water Quality	270	LF
128300-18	Bin Blocks- Wall Bench	36	LF
128300-19	Skate Stops	71	EA
128300-20	Play Feature- Pipe Works Phone	2	EA

DENVER
THE MILE HIGH CITY

CITY AND COUNTY OF DENVER
DEPARTMENT OF PUBLIC WORKS

STATEMENT OF QUANTITIES—Schedule B (River North Park)

Item No.	Description	Estimated	Quantity
128300-21	Play Feature- EEB Joist 3-D Balance Beam	1	EA
128300-22	Dish	1	EA
128300-23	Whirlwind	1	EA
128300-24	Jumper	1	EA
128300-25	Concrete embankment slide	1	EA
260519-1	Electrical Service- Park Equipment	1	LS
260519-2	Electrical Service-Interstate Building	1	LS
260519-3	Electrical Service- EEB Building 1	1	LS
260519-4	Electrical Service- EEB Building 2	1	LS
265619-1	Type A Luminaires & Poles- Multi-Head Lights	14	EA
265619-2	Type A Luminaires & Poles w/50A Receptacle-Multi-Head Lights	1	EA
265619-3	Type AA Luminaires & Poles- Festival Street Lights	9	EA
265619-4	Type B Luminaires-Lighted Bollards	7	EA
265619-5	Type C Luminaires- In Grade Solar Lights	33	EA
265619-6	Type E Luminaires- Tivoli String Light	8	EA
265619-7	Type F Luminaires- Ground Mount Landscape Lights	20	EA
260533-1	50 A Receptacle	8	EA
260533-2	Receptacles on Interstate Building	4	EA
260533-3	Receptacles on EEB Building 1	3	EA

DENVER
THE MILE HIGH CITY

CITY AND COUNTY OF DENVER
DEPARTMENT OF PUBLIC WORKS

STATEMENT OF QUANTITIES—Schedule B (River North Park)

Item No.	Description	Estimated	Quantity
262416-1	Electrical Panels & Enclosures	2	EA
260533-1	Conduit/Wire	1	LS
260500-1	Installation/Labor	1	LS
311100-1	Clearing and Grubbing	4	AC
312000-1	Earthwork- Cut & Export	4,751	CY
312000-2	Earthwork- Import	6,058	CY
320513-1	CU Structural Soil	104	CY
321116-1	Road Base @ 35th edge	136	CY
321216-1	Asphalt Pavement	190	SY
321216-2	Asphalt Curb (Temporary)	348	LF
321313-1	Concrete Pavement: 6", gray, light broom finish, pedestrian	15,380	SF
321313-2	Concrete Pavement: 8", gray, light broom finish, vehicular	1,855	SF
321313-3	Concrete Pavement: 6", gray, tined finish, pedestrian	15,529	SF
321313-4	Concrete Pavement: 8", gray, tined finish, vehicular	6,938	SF
321313-5	Concrete Pavement: 6", gray, "sand" finish, pedestrian	2,889	SF
321313-6	Concrete Pavement: 8", gray, "sand" finish, vehicular	828	SF
321313-7	Concrete Pavement: Texturize Existing Slab	5,543	SF
321400-1	Permeable Pavers	6,295	SF

DENVER
THE MILE HIGH CITY

CITY AND COUNTY OF DENVER
DEPARTMENT OF PUBLIC WORKS

STATEMENT OF QUANTITIES—Schedule B (River North Park)

Item No.	Description	Estimated	Quantity
321400-2	Cobble Swale-Mortar-Set Pavers	692	SF
321540-1	Crusher Fines Paving	4,191	SF
321540-2	Salvaged Conc. Slab in Crusher Fines Paving	4,415	SF
321816-1	Poured In Place Rubber Play Surfacing	145	SF
321816-2	Engineered Wood Fiber Play Surfacing	2,390	SF
323219-1	MSE Wall- at EEB Building	1,180	FF
328000-1	Irrigation System	1	LS
329113-1	Landscape	1	LS
331416-1	6" Ductile Iron Pipe	45	LF
331416-2	Water- 6 inch Gate Valve	1	EA
331416-3	Water - 8 in PVC	587	LF
331416-4	Water - Fittings	5	EA
331416-5	Water - 8 inch Gate Valve	2	EA
331416-6	Water - Connection to Existing Water Line	1	EA
331416-7	Water - Disinfection & Testing	1	LS
331416-8	Fire Line Stubouts	3	EA
331416-9	Fire Hydrant Assembly	1	EA
331416-10	Water - Service Line Stubouts	3	EA

DENVER
THE MILE HIGH CITY

CITY AND COUNTY OF DENVER
DEPARTMENT OF PUBLIC WORKS

STATEMENT OF QUANTITIES—Schedule B (River North Park)

Item No.	Description	Estimated	Quantity
331416-11	Water - Denver Water Hydrant Inspection Fee, Meter Setting	1	LS
331416-12	Water – 6" PVC	5.8	LF
333100-1	Sanitary-Service Line Stubouts	2	EA
334400-1	(bid item removed per addendum #2)		
334400-2	Storm- 6" PVC Underdrain	973	LF
334400-3	Storm- 8" PVC Underdrain	165	LF
334400-4	Landscape PVC Solid Underdrain	68	LF
334400-5	Landscape PVC Perforated Underdrain	117	LF
334400-6	Clean-outs	24	EA
334400-7	Storm-Sidewalk Chase	6	EA
334400-8	Storm-Trench Drains	21	LF
334400-9	Type C Inlets	1	EA
334400-10	4' Dia Manholes	2	EA
334400-11	Riprap	50	CY
334600-1	Pond Sand Layer for Underdrains	25	CY
334600-2	Area/Landscape/Plaza Drains	5	EA

CITY AND COUNTY OF DENVER
DEPARTMENT OF PUBLIC WORKS

NOTICE FOR INVITATION FOR BIDS
FOR CONTRACT NO. 201846567

RIVER NORTH PARK

BID SCHEDULE:
11:00 a.m., Local Time
JANUARY 31, 2019

Sealed bids will be received in Room 6.G.7, 201 W. Colfax Ave., Denver, CO 80202, beginning at 10:30 a.m., no later than 11:00 a.m., on bid day. All properly delivered bids will then be publicly opened and read aloud.

Bids submitted prior to 10:30 a.m. on the specified bid opening date/time shall be presented at the Office of Contract Administration, Attention: Dani Abbott, Public Works Contract Administration, 201 W. Colfax Ave., Department 614, Denver, CO 80202.

Prior to submitting a bid, the bidder shall consult the Contractor's Bulletin Board located at 201 W. Colfax Ave., 2nd Floor, Denver, CO 80202 and/or www.work4denver.com.

GENERAL STATEMENT OF WORK:
Development of a 3.5 acre parcel in the River North Neighborhood at 35th and Arkins Ct. into a new Park and road segment. Work includes excavation and haul off, site grading, concrete work, drainage and water quality, repurposed play equipment and site furnishings, water service, plumbing, electric and lighting, irrigation and landscaping.

ESTIMATED CONSTRUCTION COST:
The estimated cost of construction for this project is between $4,700,000 and $5,200,000.

TEXTURA CONSTRUCTION PAYMENT MANAGEMENT:
Bidders are required, when preparing a bid, to agree it shall use the Textura® Construction Payment Management System ("Textura") to request payment from the City and to pay subcontractors. All certified subcontractors or suppliers who are listed for participation towards any assigned program goal must be paid via Textura. All fees associated with Textura are to be paid by the awarded Contractor. Bidders shall use the pricing scale provided in Instructions to Bidders to price the Textura service appropriately. For details on the company and service, contact the Textura® Corporation at 866-TEXTURA or www.texturacorp.com.

DOCUMENTS AND BID INFORMATION AVAILABLE:
Contract Documents complete with Technical Specifications and, if applicable, construction drawings will be available on the first day of publication at: www.work4denver.com. To download digital Contract Documents at a cost of $15 per download, reference eBid Document Number **#6047431.** Contact QuestCDN at 952-233-1632 or info@questcdn.com for assistance.

PRE-BID CONFERENCE:
A pre-bid conference will be held for this project at 9:00 a.m., local time, on January 8, 2019. This meeting will take place at: 201 W. Colfax Ave., Conference Room 4.I.5, Denver, CO 80202. Please note: A **mandatory** site visit will be held for **prime contractors** at the project location immediately following the pre-bid conference. All prime contractors interested in bidding this project **must** attend the site visit. Interested sub-contractors may attend the site visit, but sub-contractor attendance is not required. Attendance will be taken at the project site.

DEADLINE TO SUBMIT QUESTIONS: January 17, 2019, 11:00 a.m., local time.

PREQUALIFICATION REQUIREMENTS:
Each bidder must be prequalified in the 1A--General Civil **OR** 1C1--Landscape Improvements category at or above the $6,000,000 monetary level in accordance with the City's Rules and Regulations Governing Prequalification of

Contractors. Each bidder must have submitted a prequalification application a minimum of ten (10) calendar days prior to the bid opening date. Applications must be submitted to the Department of Public Works, Prequalification Section, 201 W. Colfax Ave., Department 614, Denver, CO 80202. To view the Rules and Regulations and to obtain a prequalification application, please visit our website at www.denvergov.org/prequalification or call 720-865-2539 for prequalification information ONLY.

MINORITY AND WOMAN BUSINESS ENTERPRISE PARTICIPATION:
Construction, reconstruction and remodeling contracts made and entered into by the City and County of Denver are subject to Article III, Divisions 1 and 3 of Chapter 28 of the Denver Revised Municipal Code, (Sections 28-31 to 28-36 and 28-52 to 28-90 D.R.M.C) and all Minority and Woman Business Enterprise and Equal Employment Opportunity Rules and Regulations adopted by the Director of the Division of Small Business Opportunity.

Article III, Division 3 of Chapter 28 of the D.R.M.C. directs the Director of the Division of Small Business Opportunity to establish a project goal for expenditures on construction, reconstruction, and remodeling work contracted by the City and County of Denver. The specific goal for this project is:

15% Minority and Woman Business Enterprise (M/WBE) Participation

Project goals must be met with certified participants as set forth in Section 28-60, D.R.M.C. or through the demonstration of a sufficient good faith effort under Section 28-62 D.R.M.C. For compliance with good faith requirements under Section 28-62(b), **the M/WBE percentage solicitation level required for this project is 100%.**

The Director of the Division of Small Business Opportunity urges all participants in City construction, reconstruction and remodeling projects to assist in achieving these goals.

MISCELLANEOUS:
Contracts for construction, reconstruction, and remodeling are subject to the City prevailing wage rate requirements established pursuant to Section 20-76, D.R.M.C.

As its best interest may appear, the City and County of Denver reserves the right to reject any or all bids and to waive informalities in bids.

A modified version of this Notice of Invitation for Bids and the project's Statement of Quantities is available on the City and County of Denver's website at: www.work4denver.com .

Publication Dates: December 28, 31, 2018 and January 2, 2019
Published In: The Daily Journal

CITY AND COUNTY OF DENVER
DEPARTMENT OF PUBLIC WORKS

INSTRUCTIONS TO BIDDERS

IB-1 INSTRUCTION TO BIDDERS

These Instructions to Bidders are a part of the Contract Documents and are intended to serve as a guide to bidders. They are general in nature and may be amended or supplemented as needed to support any one specific invitation to bid. Each bidder shall prepare its bid in strict compliance with all requirements of the Contract Documents and by careful application of these instructions.

IB-2 BIDDING

The copy of the Contract Documents contains the Bid Form and Submittal Package for this Project, which must be used to submit a bid hereunder. The bidder must fully complete, execute and submit this Bid Form and Submittal Package, along with any other specified components of the Contract Documents, as its bid for the referenced Project.

A bidder is not required to submit as part of its bid the entire set of Contract Documents distributed by the City pursuant to the Notice of Invitation for Bids, if the bidder executes and submits the Bidder Acknowledgment Form included with the Bid Form and Submittal Package as part of its bid. However, each bidder, by submitting its bid, shall be conclusively presumed to have received and reviewed all of the information contained in the Contract Documents as this term is further defined herein.

Each bid must be enclosed in a sealed envelope, must be addressed to the Manager and must show on the face of the envelope the full name of the bidder, the City Project number, and descriptive title of the Project for which the bid is made.

The advertisement for Notice of Invitation for Bids will identify where and when the bid must be delivered.

IB-3 CONTRACT DOCUMENTS AS PUBLISHED BY CITY

Each bidder shall be responsible for, and shall be deemed to have received, all the information contained in the Contract Documents as distributed by the City pursuant to the Notice of Invitation for Bids, including addenda, whether or not such bidder has reviewed all or part of the Contract Documents in either its hard copy form or in any other format. If organizations or companies other than the City or its design professional distribute the City's Contract Documents for review by prospective bidders, whether in hard copy or via electronic or other media, neither the City nor its design professional shall be responsible for the content, completeness or accuracy of any information distributed or transmitted by any such organization or company.

IB-4 COMPLETING AND SIGNING THE BID FORMS

The bidder must complete the Bid Form by legibly writing or printing in ink, in words and figures as required, all the bidder's prices offered for the Work to be performed. All blank spaces, which require a response of the bidder, must be properly completed in full. If in the process of evaluating a bid, words and figures, as written on the Bid Form by the bidder, do not agree, the written words will govern.

For Bid Forms requiring unit price bids, the bidder shall write in the Bid Form spaces provided a unit price for each item for which a quantity is given and shall also write the product of each unit price and the quantity specified in the "Amount" or "Total" space provided.

Each bidder must sign the Bid Form and give the bidder's current business address. If an individual, the signature must be of the individual offering the bid; if a partnership, the signature must be that of a general partner; and if a corporation, both the president and the secretary must sign and the seal of the corporation must be affixed. Signatures of other persons may be acceptable if the bid contains sufficient evidence, satisfactory to the City in its sole discretion, to indicate that the other persons are authorized to bind the bidder.

IB-5 UNACCEPTABLE BIDS

The City will not accept bids from Bidders not prequalified with the Department of Public Works (if prequalification is required for this project), in arrears to the City upon debt or contract, or which are defaulters (as surety or otherwise) upon any obligation to the City.

IB-6 INFORMAL AND UNBALANCED BIDS

Any alteration, interlineations, erasure, omission, deletion or addition by the bidder to the Bid Form and Submittal Package or other parts of the Contract Documents submitted with the Bid Form and Submittal Package, as originally issued to the bidder, shall render the accompanying bid informal and may constitute cause for rejection.

Any unauthorized addition, conditional or alternate bids, failure to provide a unit price, lump sum amount or authorized alternate item specified or other irregularities of any kind which tend to render the bid incomplete, indefinite or ambiguous shall render the bid informal and may constitute cause for rejection.

Bids that are unbalanced so that each item does not reasonably carry its own proportion of cost or that contain inadequate or unreasonable prices for any item may be rejected. Bids, which have not acknowledged all addenda to the Contract Documents issued for this bid, may also be rejected.

The right is reserved by the City to reject any or all bids and to waive any informalities where it is deemed by the City to be in the best interests of the City to do so.

IB-7 ONLY ONE BID ACCEPTED

The City will accept only one bid for the same work from any one bidder. This includes bids that may be submitted under different names by one business enterprise.

IB-8 BID GUARANTEE

As a guarantee of good faith on the part of the bidder, each bid must be accompanied by a bid guarantee, consisting of either a certified or cashier's check made payable without condition to the order of the City and County of Denver or a bid bond written by an approved corporate surety in favor of the City and County of Denver. If the bid of a bidder is acceptable and the bidder is notified by the Manager that it is considered to be the Apparent Low Bidder and said bidder fails to execute a contract in the form prescribed or to furnish a performance and payment bond with a legally responsible and approved surety or to furnish the required evidence of insurance or satisfy all conditions precedent to contract execution within five (5) days after such notice is made by the City, said bid guarantee shall be forfeited to the City as liquidated damages and not as a penalty.

The bid guarantee shall be in the amount of five percent (5%) of the total bid unless otherwise specified in the Notice of Invitation for Bids and on the form appearing in the Contract Documents in the Bid Form and Submittal Package. Failure to submit a properly executed bid guarantee, on the form provided herein may, in the City's sole discretion, constitute cause for rejection.

Following award and execution of the Contract by the Apparent Low Bidder, or earlier in the sole discretion of the City, bid guarantees of all but the Apparent Low Bidder will be returned. When the Apparent Low Bidder executes the Contract, and delivers to the City satisfactory performance and payment bonds, required insurance documentation, and has satisfied all conditions precedent to contract execution by the City, and after approval, if any, by the Council of the City of the proposed Contract with the Apparent Low Bidder, the bid guarantee of the Apparent Low Bidder shall be returned. Such return shall be made within one hundred twenty (120) days from date bids are opened unless otherwise specified in the Special Contract Conditions.

IB-9 SITE INSPECTION AND INVESTIGATIONS

As part of the requirements of this bid, the bidder must attend a mandatory site-visit as set forth herein. In addition, the bidder is invited to inspect the work site and its surroundings at any additional time prior to submitting a bid. Although the bidder is not required to make such an additional inspection before bidding, for purposes of the Contract it shall be conclusively presumed that by failing to make such an inspection, the bidder has waived the right to later claim additional compensation or time extensions for conditions which would have been evident had the site been further inspected.

Drawings and Technical Specifications, defining the Work to be done, were prepared on the basis of interpretation by the design professionals of information derived from investigations of the work site. Such information and data are subject to sampling errors, and the interpretation of the information and data depends to a degree on the judgment of the design professional. In view of this, the bidder is invited to make such additional investigations as the bidder's judgment dictates the need for such investigations. Information about the degree of difficulty of the Work to be done cannot totally be derived from either the Drawings or Technical Specifications or from the Manager or his representatives.

Since the bid information cannot be guaranteed, the Contractor shall have assumed the risks attendant to successful performance of the Work and shall never make claim for additional compensation or time extensions on the grounds that the nature or amount of work to be done was not understood by the bidder at the time of the bidding.

IB-10 INCONSISTENCIES

Any seeming inconsistencies or ambiguities between different provisions of the Contract Documents or any point which the bidder believes requires a decision or interpretation by the City must be inquired into by the bidder by addressing a formal written communication to the Manager of Public Works and sending or delivering it to the offices of the Division of Public Works advertising this Project for bid at least forty-eight (48) hours, excluding Saturdays, Sundays, and holidays, before the time set for the opening of bids

Information about the decision or interpretation made in response to any inquiry will be posted on the Contractor's Bulletin Board (refer to IB-12 CONTRACTOR'S BULLETIN BOARD, for the location of the Contractor's Bulletin Board). If the matter raised requires, in the sole discretion of the Manager, that an addendum to the bid documents be issued, such addendum will be published and each bidder shall be required to acknowledge the addendum by signing and identifying it in the Bid Form when submitting the bid.

After bids are opened, all bidders must abide by the formal response of the Manager, as to any interpretation. The City shall not be bound and the bidder shall not rely on any oral communication, interpretation clarification or determination of the Contract Documents prior to bid opening.

IB-11 WITHDRAWAL OF BID

A bidder may withdraw its bid at any time prior to the time for receipt of bids set forth in the Notice of Invitation for Bids by making written request upon the Manager of Public Works. After such time, no bid may be withdrawn or modified.

Such request must be signed by the persons authorized to bind the bidder as defined in IB-3, COMPLETING AND SIGNING BID FORMS.

IB-12 CONTRACTOR'S BULLETIN BOARD

It shall be conclusively presumed that the bidder has, before submitting any bid, read and shall take full responsibility for all addenda, posted decisions, and other information relevant to the bid posted by the City on the Contractor's Bulletin Board. The Contractor's Bulletin Board is located at 201 W. Colfax, 2nd Floor, Denver, CO 80202, in the Wellington E. Webb Municipal Office Building.

IB-13 PRE-BID MEETING

Bidders are urged to attend the pre-bid meeting(s) scheduled for this Project. Attendance is not mandatory; however, bidders will be held responsible for all information presented at such meeting(s).

IB-14 ADDENDA

As its best interests may require, the City may issue addenda to the Contract Documents. Such addenda shall be posted on the Contractor's Bulletin Board and made available to all persons having purchased a set of Contract Documents as set forth in the Notice of Invitation for Bids contained herein. All bidders must acknowledge receipt of all addenda on the Bid Form at the time of submission of the bid.

IB-15 BID OPENING

Bidders are invited to be present at the bid opening. Unless otherwise suspended, delayed or canceled by posted notice from the Manager, bid opening will occur at the time and place designated in the Notice of Invitation for Bid.

IB-16 EVALUATION OF BIDS AND BASIS OF BID SELECTION

Bids will be evaluated after being read in open meeting at the place designated for such bid opening. All low bidders' bids will be reviewed for responsiveness to the requirements of the Contract Documents and whether or not the bids contain irregularities which could give any bidder an unfair advantage.

Selection will be made on the basis of the lowest, total, responsive, qualified bid, which bid shall include the total base bid set forth on the Bid Form, plus the total of any alternates set forth on the Bid Form and selected by the City during evaluation. Alternates, if any are included in the bid, will be selected in the priority shown on the Bid Form, subject to the limits of available funds. Bid selection will be subject to all requirements and special bidder qualifications contained herein and subject to approval of such resulting Contract in accordance with the Charter and Revised Municipal Code of the City and County of Denver. In addition to all other specified requirements, the City will correct arithmetical errors in all bids and corrected totals only will be considered as the basis of selection.

Upon concluding that the bid is, in fact, the lowest, total, responsive bid to the bidding conditions and that of a responsible, qualified bidder, the City will notify the Apparent Low Bidder.

As its best interests may appear, the City and County of Denver reserves the right to waive informalities in bids, to reject any and all bids and to rebid the Project.

IB-17 NOTICE TO APPARENT LOW BIDDER

The Notice to Apparent Low Bidder, a form of which is included in the Contract Special Conditions Section of the Contract Documents, is issued by the City directly to the selected bidder and informs the bidder that the Manager intends to seek approval of the execution of the Contract by the City in accordance with the Charter and Revised Municipal Code of the City and County of Denver. Specifically, it informs the bidder of its obligations with respect to execution of the Contract and instructs the bidder on how to proceed toward execution of the Contract. The City reserves the right to notify the Apparent Low Bidder, at any time within one hundred twenty (120) days from the date of the opening of the bids, that approval to contract with the Apparent Low Bidder shall be sought in accordance with the Charter and Revised Municipal Code of the City and County of Denver.

In accordance with the terms and conditions contained in the Bid Form and Submittal Package and any additional requirements set forth in the Notice to Apparent Low Bidder or elsewhere in the Contract Documents, the Apparent Low Bidder shall execute the Contract Form contained in the Contract Documents made available by the City for execution in the appropriate number of counterparts. The Apparent Low Bidder shall return the fully executed Contract Document sets, along with any supplemental documents required herein, to the City and shall comply with all other conditions precedent to Contract execution within five (5) days of the date of issuance of the Notice to Apparent Low Bidder by the City. Failure to comply with each of these requirements within five (5) days of the date of issuance of the Notice to Apparent Low Bidder by the City shall render the bid nonresponsive and may constitute cause for rejection.

Issuance of such Notice shall not, however, constitute a commitment on the part of the City or create any rights in the Apparent Low Bidder to any contract with the City.

IB-18 EXECUTION OF CONTRACT

The process of executing a contract requires action by both the apparent low bidder and the City. After it notifies the Apparent Low Bidder, the City will prepare the Contract Documents by incorporating all of the documents submitted by the Apparent Low Bidder into one or more executable copies. Upon notification that contracts documents are ready for execution the Apparent Low Bidder shall execute the contract documents. At this time, the successful bidder shall also provide certain supplemental documents for incorporation into the Contract Documents. These supplemental documents shall include: the properly executed Certificate of Insurance Forms evidencing the apparent low bidder's satisfactory compliance with the insurance requirements set forth in the Contract Documents; a properly executed Payment and

Performance Bond Form and appropriate Power of Attorney evidencing the Apparent Low Bidder's satisfactory compliance with the bonding requirements set forth in the Contract Documents; and documentation of compliance with any other conditions precedent to execution of the Contract by the City set forth in the Contract Documents. The insurance and bond forms contained in the Contract Special Conditions Section of the Contract Documents must be used in satisfying these supplemental document requirements.

These documents are then delivered to the City within the prescribed time period for examination of the documents to determine whether or not the Contractor has correctly executed the Contract and has correctly provided the required supplemental documents and that these documents are satisfactorily and properly completed. From here, all of the documents are forwarded to the City Attorney who will, if the insurance and bonding offered is acceptable and if all other elements of the Contract Documents are in order, recommend that the Manager and the Mayor approve the documents and, when required by the City Charter, prepare an ordinance for submittal to City Council authorizing the execution of the Contract. The City Attorney shall in all applicable instances submit the proposed contract and ordinance to City Council. After City Council approval, the Contract shall be reviewed by the City Attorney and routed for execution by the Mayor, the Clerk for attestation and the Auditor for countersignature and registration. When the total process of contract execution is complete, a Notice to Proceed will be issued and a single executed copy of the Contract will be delivered to the Contractor. Any work performed or a material purchased prior to the issuance of Notice to Proceed is at the Contractor's risk.

IB-19 BONDING REQUIREMENTS

In accordance with the provisions of General Contract Conditions, Title 15, PERFORMANCE AND PAYMENT BONDS, the minimum bonding requirements for this Contract are set forth in the form **CITY AND COUNTY OF DENVER PERFORMANCE AND PAYMENT BOND** contained in the Special Conditions Section of the Contract Documents. Upon receipt of Notice to Apparent Low Bidder, the apparent low bidder must cause this form bond to be purchased, executed and furnished, along with appropriate Powers of Attorney and a surety authorization letter (in form similar to the one attached), to the City in accordance with the instructions contained herein.

IB-20 INSURANCE REQUIREMENTS

The minimum insurance requirements for this Contract are set forth in the Special Conditions Section of the Contract Documents. Bidders are urged to consider, in preparing a bid hereunder, that each condition, requirement or specification set forth in the form certificate must be complied with by the Contractor and all subcontractors performing Work on the Project, unless such requirements are specifically accepted in writing by the City's Risk Management Office. The Contractor must either include all subcontractors performing work hereunder as insureds under each required policy or furnish a separate certificate for each subcontractor. In either case, the Contractor shall insure that each subcontractor complies with all of the coverage requirements.

IB-21 PERMITS AND LICENSES

All permits, licenses and approvals required in the prosecution of the work shall be obtained and paid for by the Contractor.

IB-22 PREVAILING WAGE REQUIREMENTS

Contractor shall comply with, and agrees to be bound by, all requirements, conditions and City determinations regarding the Payment of Prevailing Wages Ordinance, Sections 20-76 through 20-79, D.R.M.C. including, but not limited to, the requirement that every covered worker working on a City owned or leased building or on City-owned land shall be paid no less than the prevailing wages and fringe benefits in effect on the date the bid or request for proposal was advertised. In the event a request for bids, or a request for proposal, was not advertised, Contractor shall pay every covered worker no less than the prevailing wages and fringe benefits in effect on the date funds for the contract were encumbered.

Date bid or request for qualifications/proposals was advertised: December 28, 2018.

Prevailing wage and fringe rates will adjust on, and only on, the anniversary of the date the Contract was fully executed. Unless expressly provided for in this Agreement, Contractor will receive no additional compensation for increases in prevailing wages or fringe benefits.

Contractor shall provide the Auditor with a list of all subcontractors providing any services under the contract.

Contractor shall provide the Auditor with electronically-certified payroll records for all covered workers employed under the contract.

Contractor shall prominently post at the work site the current prevailing wage and fringe benefit rates. The posting must inform workers that any complaints regarding the payment of prevailing wages or fringe benefits may be submitted to the Denver Auditor by calling 720-913-5000 or emailing auditor@denvergov.org.

If Contractor fails to pay workers as required by the Prevailing Wage Ordinance, Contractor will not be paid until documentation of payment satisfactory to the Auditor has been provided. The City may, by written notice, suspend or terminate work if Contractor fails to pay required wages and fringe benefits.

IB-23 TAX REQUIREMENTS

General. Bidders are referred to the General Contract Condition 323, TAXES, as to taxes to which they may be subject in performing the Work under this Contract, including but not limited to sales and use taxes and the Denver Occupational Privilege Tax. The following instructions are to be considered along with the General Contract Conditions and not in lieu of them.

Sales and Use Tax. Construction and building materials sold to contractors and subcontractors for use on structures, roads, streets, highways, and other public works owned by the City and County of Denver are exempt from state, RTD, and Cultural Facilities District sales and use taxes. However, such materials will be subject to sales and use taxes imposed by the City and County of Denver.

It is the responsibility of the Contractor and its subcontractors to apply to the Colorado Department of Revenue ("CDOR") for a certificate, or certificates, of exemption indicating that their purchase of construction or building materials is for a public project, and to deliver to the City copies of such applications as soon as possible after approval by the CDOR. Bidders shall not include in their bid amounts the exempt state, RTD, and Cultural Facilities District Sales and Use Taxes.

Denver Occupational Privilege Tax. Any employee working for a contractor, or a subcontractor, who earns over $500 working in Denver during a calendar month, is subject to the payment of the Employee Occupational Privilege Tax. The Contractor and any subcontractor must pay the Business Occupational Privilege Tax for each of its employees who are subject to such tax.

IB-24 DIVERSITY AND INCLUSIVENESS IN CITY SOLICITATIONS

Each bidder shall, as a condition of responsiveness to this solicitation, complete and return the "Diversity and Inclusiveness in City Solicitations Information Request Form" with their Bid.

Using the "Diversity and Inclusiveness in City Solicitations Information Request Form" provided, please state whether you have a diversity and inclusiveness program for employment and retention, procurement and supply chain activities, or customer service and provide the additional information requested on the form. The information provided on the "Diversity and Inclusiveness in City Solicitations Information Request Form" will provide an opportunity for City contractors to describe their own diversity and inclusiveness practices. Contractors are not expected to conduct intrusive examinations of its employees, managers, or business partners in order to describe diversity and inclusiveness measures. Rather, the City simply seeks a description of the contractor's current practices, if any.

Diversity and Inclusiveness information provided by City contractors in response to City solicitations for services or goods will be collated, analyzed, and made available in reports consistent with City Executive Order No. 101. However, no personally identifiable provided by or obtained from contractor's will be in such reports.

IB-25 MINORITY AND WOMAN BUSINESS ENTERPRISE (M/WBE) REQUIREMENTS

Article III, Divisions 1 and 3 of Chapter 28, Denver Revised Municipal Code (D.R.M.C.), designated as Sections 28-31 – 28-36 and 28-52 – 28-90 D.R.M.C. and referred to in these Bid Documents as the "M/WBE Ordinance" and any Rules or Regulations promulgated pursuant thereto apply to this Project and are incorporated into these Bid Documents by reference. Generally, the M/WBE Ordinance provides for the adoption of a good faith goals program, to be administered by the Division of Small Business Opportunity (DSBO), devised to provide increased bidding opportunities for Minority and Woman Business Enterprises (M/WBEs). As such, each bidder must comply with the terms and conditions of the M/WBE Ordinance in making its bid and, if awarded the Contract, in performing all Work thereunder. A bidder's failure to comply with the M/WBE Ordinance, any Rules or Regulations promulgated pursuant thereto, or any additional requirement contained herein shall render the bid non-responsive and shall constitute cause for rejection. Failure by the contractor awarded the contract to comply with M/WBE Ordinance requirements during the performance of the contract is a material breach of the contract, which may result in the in the imposition of sanctions on the Contractor, as deemed appropriate by DSBO. Copies of the M/WBE Ordinance and its accompanying Rules and Regulations are available for the use and review of bidders from DSBO. In order to comply with the bid requirements of the M/WBE Ordinance, a bidder shall either meet the established project goal or, in the alternative, demonstrate that the bidder has made sufficient good faith efforts to meet the goal in accordance with the M/WBE Ordinance.

Meeting Established Goal

In preparing a bid to meet the established Project goal, bidders should consider the following instructions relating to compliance with the M/WBE Ordinance:

1. Under the M/WBE Ordinance, the Director of DSBO ("Director") is directed to establish project goals for expenditures on construction, reconstruction, and remodeling work performed for the City and County of Denver. The specific goal for this project is stated in the Notice of Invitation for Bids bound herein.

2. In preparing its bid, each bidder shall list on the Bid Form pages entitled "List of Proposed MWBE Bidders, Subcontractors, Suppliers, Manufacturers, Manufacturers' Representatives or Brokers" the name, address, work description/supply, committed level of participation and other required information for each M/WBE of any tier which the bidder intends to use in performing the work on this Project. **Only the M/WBEs identified and the precise levels of participation listed for each on the Bid Form page, at the time of bid opening, will be considered in determining whether the bidder has met the designated participation goal. Additional, revised or corrected participation submitted after bid opening will not be considered.** M/WBE bidders may count self-performance or joint venture activity in meeting the M/WBE project goal, but only for the scope of work performed as a commercially useful function and at a percentage level the M/WBE will be performing itself.

3. Any agreement between a bidder or proposer and an MBE or WBE in which the bidder or proposer requires that the MBE or WBE not provide subcontracting quotations to other bidders or proposers is prohibited and shall render a bidder's bid or proposer's proposal nonresponsive. D.R.M.C. 28-63(f)

4. If a bidder/proposer is participating in a joint venture with a certified M/WBE firm, complete the Joint Venture Eligibility Form and Joint Venture Affidavit contained in this bid document/RFP. Submit the aforementioned forms with the firm's Joint Venture Agreement, to the DSBO Director, **at least 10 working days prior to the proposal submittal.** The Joint Venture must be approved prior to the bid opening or proposal submittal by the DSBO Director. Approval by the DSBO Director includes determining the amount the Joint Venture will count towards meeting the project goal.

5. All M/WBEs listed on the Bid Form must be properly certified by the City on or before the date bids are opened in order to count towards meeting the designated goal. DSBO maintains an M/WBE Directory ("Directory"), which is a current listing of M/WBEs that have been certified by the City. A copy of the DSBO Directory is located at DSBO web site at https://www.denvergov.org/dsbo. Bidders are encouraged to use the Directory to assist in locating M/WBEs for the work and supplies

required on the Project. Bidders are reminded that changes may be made to the Directory at anytime in accordance with the City's M/WBE Ordinance and procedures established to administer this program and a current copy of the Directory must always be used in preparing a bid. M/WBE certification or listing in the Directory is not a representation or warranty by the City as to the qualifications of any listed M/WBE.

6. In accordance with the provisions of the M/WBE Ordinance, DSBO will evaluate each bid to determine the responsiveness of the bid to the requirements of the M/WBE Ordinance. In determining whether a bidder's committed level of participation meets or exceeds the stated M/WBE goal, DSBO shall base its calculation of applicable amounts and percentages on the total base bid amount, not including any listed alternates, of each bid as follows:

   a. The bid information provided by the agency will be used to determine the total base bid amount of each bid. Each bidder's total base bid amount will be multiplied by the M/WBE percentage established for the project to determine the exact dollar amount of required M/WBE participation for the Project. This amount will then be compared against the exact dollar amounts for the M/WBE committed for participation by the bidder. If the total dollar amount of participation listed meets or exceeds the established M/WBE dollar amount goal listed, then DSBO will determine that the goal has been met.

   b. In addition, DSBO will determine the exact commitment percentage for each listed M/WBE by dividing the dollar amount listed for each M/WBE by the total base bid dollar amount submitted by the bidder. These individual percentages, when totaled for all listed M/WBE, will establish the total committed percentage level of M/WBE participation that the bidder must comply with during the life of the contract. In all cases, the committed percentage level of M/WBE participation must equal or exceed the assigned M/WBE goal for the Project.

   c. In providing the exact dollar amount of participation for each listed M/WBE, a bidder should take care never to round up in determining whether or not the total of these amounts meets or exceeds the established percentage goal. The goal must be met or exceeded by dollar amounts and percentages in order for DSBO to determine that the bidder has met or exceeded the applicable M/WBE goal.

   d. As previously mentioned, compliance with the M/WBE goal will be determined on the base bid alone. If a bid contains alternates, participation contained in any alternate will not count towards satisfaction of the Project goal. However, should any designated alternate be selected by the City for inclusion in the contract ultimately awarded, the M/WBE goal percentage level submitted at bid time, on the base bid, will also apply to the selected alternates and must be maintained for the life of the contract on the total contract amount, including any alternate work. Thus, even though such participation will not be considered in evaluating bids, bidders are urged to consider participation in preparing bids for designated alternates.

   d. On projects where force account or allowance bid items have been included, bidders must meet the M/WBE goal percentage based upon the total base bid, including all such items that are submitted to the City. However, when a force account or allowance is designated by the City to be either performed or purchased from a specific company, the bidder may back out the dollar amount of the force account or allowance from the total base bid and meet the M/WBE goal on the remaining reduced amount.

   e. On bids which, at the time of bid opening, are equal to or exceed Five Million Dollars ($5,000,000.00), including any alternates which may be selected, only sixty percent (60%) of the value of the commercially useful function performed by M/WBE suppliers shall count toward satisfaction of the Project goal. On Projects under Five Million ($5,000,000.00) the value of the commercially useful function of M/WBE supplier(s) will count at a one hundred percent (100%) level. Manufacturer's representatives and packagers shall be counted in the same manner as brokers.

f. In utilizing the M/WBE participation of a Broker only the bona fide commissions earned by such Broker for its performance of a commercially useful function will count toward meeting the Project goals. The bidder must separate the bona fide brokerage commissions from the actual cost of the supplies or materials provided to determine the actual dollar amount of participation that can be counted towards meeting the goal.

7. On or before the third (3rd) working day after bid opening, all of the Bidders are required to submit an executed "Letter of Intent" for each M/WBE listed on the Bid Form as a joint venture member, subcontractor, supplier, manufacturer, manufacturers' representative or broker of any tier. **An MBE or WBE Prime Bidder needs to submit a Letter of Intent for itself for self performed work,** and must identify their level of participation on the designated M/WBE participation page bound herein. A Letter of Intent shall be submitted only for the M/WBEs listed at the time of bid opening, since this is the only participation that will be counted toward satisfaction of the project goal. A form for the M/WBE Letter of Intent is included with the Bid Form. The M/WBE Letter of Intent is a written communication from the Bidder to the City evidencing an understanding that the Bidder has or will enter into a contractual relationship with the M/WBE or that its subcontractor(s) and supplier(s), manufacturer(s), manufacturers' representative(s) and broker(s) will do so. Each M/WBE Letter of Intent shall be accompanied by a copy of the City and County of Denver's M/WBE certification letter for each proposed M/WBE identified at bid time. Bidders are urged to carefully review these Letters before submission to the City to ensure that they are properly completed and executed by the appropriate parties.

Good Faith Effort.
In preparing a bid to demonstrate a good faith effort, bidders should consider the following instructions relating to compliance with the M/WBE Ordinance:

1. If the bidder or proposer has not fully met the project goal as provided in section 28-60, then it shall demonstrate that it has made good faith efforts to meet such goal. The bidder or proposer shall furnish to the director, within three (3) working days after bid opening by the City or on or before the time of the final project-specific proposal submitted to and authorized by the City pursuant to a competitive selection process, or bid selection by a private owner, a detailed statement of its good faith efforts to meet the project goal set by the director. This statement shall address each of the items in subsection (b) and any additional criteria that the director may establish by rule or regulation consistent with the purposes of this division 3. Good faith efforts must be demonstrated to be meaningful and not merely for formalistic compliance with this Division 3. The scope and intensity of the efforts will be considered in determining whether the bidder or proposer has achieved a good faith effort.

2. The statement of good faith efforts shall include a specific response and verification with respect to each of the following good faith effort categories, which may be further defined by rule or regulation. A bidder or proposer may include any additional information it believes may be relevant. Failure of a bidder or proposer to show good faith efforts as to any one (1) of the following categories shall render its overall good faith effort showing insufficient and its bid or proposal non-responsive:
    a. If prebid or preselection meetings are scheduled by the City at which MBEs and WBEs may be informed of subcontracting or joint venture opportunities under a proposed contract to be bid, or procured pursuant to the competitive selection process, attendance at such prebid or preselection meetings is not mandatory; however, bidders and proposers are responsible for the information provided at these meetings.
    b. The bidder or proposer must solicit through all reasonable and available means, the interest of all MBEs and WBEs certified in the scopes of work of the contract. The bidder or proposer must solicit the interest of such MBEs and WBEs within sufficient time, prior to the bid opening or date of final project-specific proposal in the case of a competitive selection process, to allow such MBEs and WBEs to respond to the solicitation. The bidder or proposer must determine with certainty if the MBEs and WBEs are interested by demonstrating appropriate steps to follow up initial solicitations.

c. The bidder or proposer must select portions of the work of the contract to be performed by MBEs and WBEs in order to increase the likelihood that the project goal will be achieved. This includes, where appropriate, breaking out contract work items into economically feasible units to facilitate MBE and WBE participation as subcontractors or joint venturers, and for bidder or proposer self-performed work, as suppliers, manufacturers, manufacturer's representatives and brokers, all reasonably consistent with industry practice, even when the bidder or proposer would otherwise prefer to perform these work items with its own forces. The bidder or proposer must identify what portions of the contract will be self-performed and what portions of the contract will be opened to solicitation of bids, proposals and quotes from MBE and WBEs. All portions of the contract not self-performed must be solicited for MBE and WBE participation. The ability or desire of a bidder or proposer to perform the work of a contract with its own forces does not relieve the bidder or proposer of the responsibility to meet the project goal or demonstrate good faith efforts to do so.

d. The bidder or proposer, consistent with industry practice, must provide MBEs and WBEs at a clearly stated location with timely, adequate access to and information about the plans, specifications, and requirements of the contract, including bonding and insurance requirements, if any, to assist them in responding to a solicitation.

e. The bidder or proposer must negotiate in good faith with interested MBEs and WBEs and provide written documentation of such negotiation with each such MBE or WBE.

f. For each MBE or WBE which contacted the bidder or proposer or which the bidder or proposer contacted or attempted to subcontract or joint venture with, consistent with industry practice, the bidder or proposer must supply a statement giving the reasons why the bidder or proposer and the MBE or WBE did not succeed in negotiating a subcontracting, supplier, manufacturer, manufacturer's representative, broker or joint venture agreement, as applicable.

3. The bidder or proposer must provide verification that it rejected each non-utilized MBE and WBE because the MBE or WBE did not submit the lowest bid or it was not qualified. Such verification shall include a verified statement of the amounts of all bids received from potential or utilized subcontractors, suppliers, manufacturers, manufacturer's representatives, brokers or joint venturers on the contract, whether or not they are MBEs or WBEs. In making such a determination of not being qualified, the bidder or proposer shall be guided by the definition of qualified in section 28-54(42), but evidence of lack of qualification must be based on factors other than solely the amount of the MBE's or WBE's bid. For each MBE or WBE found not to be qualified by the bidder or proposer, the verification shall include a statement giving the bidder's or proposer's reasons for its conclusion. A bidder's or proposer's industry standing, or group memberships may not be the cause of rejection of an MBE or WBE. A bidder or proposer may not reject an MBE or WBE as being unqualified without sound reasons based on a reasonably thorough investigation and assessment of the MBE's or WBE's capabilities and expertise.

4. If requested by a solicited MBE or WBE, the bidder or proposer must make reasonable efforts to assist interested MBEs and WBEs in obtaining bonding, lines of credit, or insurance as required by the City or by the bidder or proposer, provided that the bidder or proposer need not provide financial assistance toward this effort.

5. If requested by a solicited MBE or WBE, the bidder or proposer must make reasonable efforts to assist interested MBEs and WBEs in obtaining necessary and competitively priced equipment, supplies, materials, or related assistance or services for performance under the contract, provided that the bidder or proposer need not provide financial assistance toward this effort.

6. The bidder or proposer must use the DSBO MBE/WBE directories to identify, recruit, and place MBEs and WBEs.

7. In determining whether a bidder or proposer has satisfied good faith efforts as to a project goal, the success or failure of other bidders or proposers on the contract in meeting such project goal may be considered.

Continuing Commitments.
In accordance with the provisions of the M/WBE Ordinance, the bidder agrees that it is committed to meeting either the M/WBE participation goal or the M/WBE participation set forth in its statement of good faith. This commitment must be expressly indicated on the "Commitment to MWBE SBE Participation" form included with the Bid Form. This commitment includes the following understandings:

1. The bidder understands it must maintain M/WBE goals throughout the performance of the Contract pursuant to the requirements set out in D.R.M.C. 28-72.

2. The bidder understands that it must establish and maintain records and submit regular reports, as required, which will allow the City to assess progress in achieving the M/WBE participation goal.

3. The bidder understands that if change orders or any other contract modifications are issued under the contract, the bidder shall have a continuing obligation to immediately inform DSBO in writing of any agreed upon increase or decrease in the scope of work of such contract, upon any of the bases discussed in Section 28-73 of the M/WBE Ordinance, regardless of whether such increase or decrease in scope of work has been reduced to writing at the time of notification.

4. The bidder understands that if change orders or other contract modifications are issued under the contract, that include an increase in scope of work of a contract for construction, reconstruction, or remodeling, whether by amendment, change order, force account or otherwise which increases the dollar value of the contract, whether or not such change is within the scope of work designated for performance by an M/WBE at the time of contract award, such change orders or contract modification shall be immediately submitted to DSBO for notification purposes. Those amendments, change orders, force accounts or other contract modifications that involve a changed scope of work that cannot be performed by existing project subcontractors or by the contractor shall be subject to a goal for M/WBEs equal to the original goal on the contract which was included in the bid. The contractor shall satisfy such goal with respect to such changed scope of work by soliciting new M/WBEs in accordance with Section 28-73 of the M/WBE Ordinance as applicable, or the contractor must show each element of modified good faith set out in Section 28-75(c) of the M/WBE Ordinance. The contractor shall supply to the director the documentation described in Section 28-75(c) of the M/WBE Ordinance with respect to the increased dollar value of the contract.

All bidders are charged with knowledge of and are solely responsible for complying with each and every provision of the M/WBE Ordinance in making a bid and, if awarded, in performing the work described in the Contract Documents. Failure to comply with these provisions could constitute cause for rejection of a bid or subject the selected contractor to sanctions set forth in the M/WBE Ordinance. These instructions are intended only to generally assist the bidder in preparing and submitting a compliant bid. Should any questions arise regarding specific circumstances, bidders must consult the M/WBE Ordinance or contact the Project's designated DSBO representative at (720) 913-1999.

IB- 26 DISCLOSURE OF INFORMATION

All submissions and other materials provided or produced pursuant to this Invitation for Bids may be subject to the Colorado Open Records Law, C.R.S. 24-72-201, et seq. As such, bidders are urged to review these disclosure requirements and any exceptions to disclosure of information furnished by another party and, prior to submission of a bid to the City, appropriately identify materials that are not subject to disclosure. In the event of a request to the City for disclosure of such information, the City shall advise the bidder of such request to give the bidder an opportunity to object to the disclosure of designated confidential materials furnished to the City. In the event of the filing of a lawsuit to compel such disclosure, the City will tender all such material to the court for judicial determination of the issue of disclosure and each bidder agrees to intervene in such lawsuit to protect and assert its claims of privilege against disclosure of such material. Each bidder further agrees to defend, indemnify and save and hold harmless the City, its officers, agents and employees, from any claim, damages, expense, loss or costs arising out of the bidder's intervention to protect and assert its claims of privilege against disclosure under the Open Records Law including, but not limited

to, prompt reimbursement to the City of all reasonable attorney fees, costs and damages that the City may incur directly or may be ordered to pay by such court.

IB-27 GENERAL BIDDING INFORMATION

Bidders are instructed to contact the Contract Administrator designated below for this Project for pre-bid, post-bid and general City bidding information. Bidders can also visit www.work4denver.com for information, both general and project specific. The Contract Administrator assigned to this project is Dani Abbott who can be reached via email at pw.procurement@denvergov.org.

IB-28 PAYMENT PROCEDURE REQUIREMENTS

Bidder recognizes and agrees that it shall be required to use the Textura® Construction Payment Management System ("Textura") for this Project to request payment from the City and to pay subcontractors. All certified subcontractors or suppliers who are listed for participation towards any assigned program goal must be paid via Textura. All fees associated with Textura are to be paid by the bidder for billings for work performed. Bidders are required, when preparing a bid, to enter the price of Textura on the line provided for the service. The fee is all inclusive of all subcontractor, project and subscription fees associated with Textura. The bidder will calculate the fee based on their total bid (not including any alternates, if applicable) and the table below, and then include it on the line item provided in the bid form labeled **"Textura® Construction Payment Management System Fee"**. This expense becomes part of the contract and billable to the City. All costs including, but not limited to, costs associated with training, entering data, and/or utilizing Textura other than the Textura Construction Payment Management System Fee are overhead and shall not be reimbursed by the City. Bidder will be responsible for any tax on the Textura fee. As with other taxes, the City will not reimburse bidder for this cost and therefore this cost should be included in bidder's bid. Textura will invoice the awarded bidder directly.

Project Value	Project Fee (GC + Sub Usage)
$100,000 – 249,999.99	$780
$250,000 - $499,999.99	$1,625
$500,000 - $999,999.99	$3,250
$1,000,000 - $2,999,999.99	$5,850
$3,000,000 - $4,999,999.99	$9,100
$5,000,000 - $9,999,999.99	$12,220
$10,000,000 - $19,999,999.99	$20,345
$20,000,000 - $49,999,999.99	$32,500
$50,000,000 - $99,999,999.99	$48,750
$100,000,000 - $199,999,999.99	$69,095
$200,000,000 - $299,999,999.99	$85,345
$300,000,000 - $399,999,999.99	$109,720
$400,000,000 - $499,999,999.99	$142,220
$500,000,000 - $999,999,999.99	$162,500
$1,000,000,000 - $1,999,999,999.99	$345,345
$2,000,000,000 - $4,999,999,999.99	$650,000
$5,000,000,000 - $9,999,999,999.99	$1,015,625
$10,000,000,000 or greater	$1,503,125

RULES AND REGULATIONS
REGARDING
EQUAL EMPLOYMENT OPPORTUNITY

Promulgated and adopted by the Manager of Public Works pursuant to and by authority of Article III, Division 2, Chapter 28 of the Revised Municipal Code of the City and County of Denver, and for the purpose of insuring that contractors, subcontractors and suppliers soliciting and receiving compensation for contract work from or through the City and County of Denver provide equal opportunity in employment without regard to race, color, creed, sex, national origin, age, religion, marital status, political opinion or affiliation or mental or physical handicap and meet certain requirements for the hiring, training, promotion, and treatment during employment of members of ethnic groups subject to differential treatment, including persons of African descent (Black), Spanish-surnamed (Hispanic), Asian-American and American Indian Groups.

RULE I - *DEFINITIONS*

A. "City" means the City and County of Denver.

B. "Manager" shall mean the Manager of Public Works for the City and County of Denver.

C. "Contract" means a contract entered into with the City and County of Denver, financed in whole or in part by local resources or funds of the City and County of Denver, for the construction of any public building or prosecution or completion of any public work.

D. "Contractor" means the original party to a contract with the City and County of Denver, also referred to as the "general" or "prime" contractor.

E. "Director" means the Director of the Division of Small Business Opportunity.

F. "Subcontractor" means any person, company, association, partnership, corporation, or other entity, which assumes by subordinate agreement some or all of the obligations of the general or prime contractor.

G. The phrase "Bidding Specifications" as used in Article III, Division 2 of Chapter 28 of the Revised Municipal Code shall include BID CONDITION, INVITATION TO BID, and NOTICE OF PROPOSAL.

H. "Affirmative Action Program" means a set of specific and result-oriented procedures or steps to which a contractor commits himself to apply every good faith effort to employ members of ethnic minority groups, to include persons of African descent (Black), Spanish surnamed (Hispanic), Asian-American, American Indians, and persons with mental or physical handicap.

I. "Division of Small Business Opportunity" means the City agency established pursuant to Article III, Division 1 of Chapter 28 of the Denver Revised Municipal Code.

RULE II - *NOTICE OF HEARING*

When results of conciliation efforts are unsatisfactory to the Manager and he is informed in accordance with Article III, Division 2 of Chapter 28 of the Revised Municipal code that a contractor or subcontractor has apparently failed to meet affirmative action and equal employment opportunity requirements after a reasonable period of notice to correct deficiencies, the Manager will, prior to imposition of any sanctions, afford the general contractor a hearing in order to determine whether the contractor or his subcontractors have failed to comply with the affirmative action and equal employment opportunity requirements of Article III, Division 2 of Chapter 28 of the Revised Municipal Code or of the contract. Written notice of such hearing shall be delivered personally or sent by certified mail, return receipt requested, to the contractor and to any subcontractor involved, at least ten (10) days prior to the date scheduled for the hearing.

RULE III - *HEARING*

A. Contractors will appear at hearings and may be represented by counsel, and may present testimony orally and other evidence.

B. Hearings shall be conducted by one or more hearing examiners designated as such by the Manager.

C. The Director of the Division of Small Business Opportunity may participate in hearings as a witness.

D. Hearings shall be held at the place specified in the notice of hearing.

E. All oral testimony shall be given under oath or affirmation and a record of such proceedings shall be made.

F. All hearings shall be open to the public.

G. The hearing officer shall make recommendations to the Manager who shall make a final decision.

REGULATIONS

REGULATION NO. 1 - ORDINANCE:

The Rules and Regulations of the Manager shall be inserted in the bidding specifications for every contract for which bidding is required.

REGULATION NO. 2 - EXEMPTIONS:

Each contract and subcontract, regardless of the dollar amount, shall be subject to affirmative action requirements unless specifically exempted in writing individually by the Manager. Exemptions apply only to "affirmative action" in equal employment opportunity, and are not to be construed as condonation in any manner of "discrimination" or "discriminatory practices" in employment because of race, color, creed, sex, age, national origin, religion, marital status, political opinion or mental or physical handicap.

REGULATION NO. 3 - DIRECTOR OF CONTRACT COMPLIANCE:

The Director of the Division of Small Business Opportunity shall perform the duties assigned to such official by Article III, Division 2 Chapter 28 of the Revised Municipal Code and by the Manager. (1) The Director of the Division of Small Business Opportunity or designated representatives shall inform bidders and contractors of affirmative action procedures, programs, and goals in accordance with the Ordinance at pre-bid and pre-construction conference; (2) make regular on-site inspections; (3) supply contractors and subcontractors with report forms to be completed by them when requested, and furnished to the Director of the Division of Small Business Opportunity; and (4) review payroll records, employment records and practices of general contractors and their subcontractors and suppliers during the performance of any contract. The Director of the Division of Small Business Opportunity shall promptly report apparent affirmative action deficiencies to the Manager.

REGULATION NO. 4 - GOALS AND TIMETABLES:

In general, goals and timetables should take into account anticipated vacancies and the availability of skills in the market place from which employees should be drawn. In addition, where discrimination in employment by a general contractor or any of his subcontractors is indicated, a corrective action program will take into account the need by the general contractor and his subcontractors to correct past discriminatory practices and reach goals of minority manpower utilization on a timely basis through such recruiting and advertising efforts as are necessary and appropriate.

REGULATION NO. 5 - AWARD OF CONTRACTS:

It shall be the responsibility of the Director of the Division of Small Business Opportunity to determine the affirmative action capability of bidders, contractors and subcontractors and to recommend to the Manager the award of contracts to those bidders, contractors and subcontractors and suppliers who demonstrate the ability and willingness to comply with the terms of their contract.

REGULATION NO. 6 - PUBLICATION AND DUPLICATION:

Copies of these Rules and Regulations as amended by the Manager from time to time, shall as soon as practicable and after Notice being published will be made a part of all City Contracts.

REGULATION NO. 7 - NOTICE TO PROCEED:

Prior to issuance of the Notice to Proceed, a sign-off will be required of the Director of the Division of Small Business Opportunity or his designee.

REGULATION NO. 8 - CONTRACTS WITH SUBCONTRACTORS:

To the greatest extent possible, the contractor shall make a good faith effort to contract with minority contractors, subcontractors and suppliers for services and supplies by taking affirmative actions, which include but are not limited to the following:

1. Advertise invitations for subcontractor bids in minority community news media.
2. Contact minority contractor organizations for referral of prospective subcontractors.
3. Purchase materials and supplies from minority material suppliers.

REGULATION NO. 9 - AGENCY REFERRALS:

It shall be no excuse that the union with which the contractor or subcontractor has an agreement providing for referral, exclusive or otherwise, failed to refer minority employees.

REGULATION NO. 10 - CLAUSES:

The Manager shall include the appropriate clauses in every contract and the contractor shall cause to be inserted in every subcontract the appropriate clauses:

1. APPENDIX A: City and County of Denver Equal Opportunity Clause - ALL CONTRACTS funded only with City and County of Denver monies.
2. APPENDIX B: Equal Opportunity Clause (11246) - ALL FEDERAL ASSISTED.
3. APPENDIX C: Section 3 - Assurance of Compliance - HUD ASSISTED PROJECTS.
4. APPENDIX D: Section 3 - Clause - HUD ASSISTED PROJECTS.

All amendments to the appendices shall be included by reference.

REGULATION NO. 11 - SHOW CAUSE NOTICES:

When the Manager has reasonable cause to believe that a contractor has violated Article III, Division 2 of Chapter 28 of the Denver Revised Municipal Code, he may issue a notice requiring the contractor to show cause, within fifteen (15) days why enforcement procedures, or other appropriate action to insure compliance, should not be instituted.

REGULATION NO. 12 - BID CONDITIONS - AFFIRMATIVE ACTION REQUIREMENTS - EQUAL EMPLOYMENT OPPORTUNITY:

1. APPENDIX E: The Bid Conditions - Affirmative Action Requirements - Equal Employment Opportunity as amended and published by the U.S. Department of Labor Employment Standards Administration, Office of Federal Contract Compliance, shall be inserted verbatim for bidding specification for every non-exempt contract involving the use of Federal funds.

2. APPENDIX F: The Bid Conditions - Affirmative Action Requirements - Equal Employment Opportunity as published by the Department of Public Works, City and County of Denver, shall be inserted verbatim as bidding specifications for every non-exempt contract using City funds.

CITY AND COUNTY OF DENVER
DEPARTMENT OF PUBLIC WORKS

APPENDIX A

CITY AND COUNTY OF DENVER EQUAL OPPORTUNITY CLAUSE - ALL CONTRACTS

1. The Contractor will not discriminate against any employee or applicant for employment because of race, creed, color, sex, age, national origin, religion, marital status, political opinion or affiliation, or mental or physical handicap. The Contractor will take affirmative action to ensure that applicants are employed, and that employees are treated during employment without regard to their race, creed, color, sex, age, national origin, religion, marital status, political opinion or affiliation, or mental or physical handicap. Such action shall include, but not be limited to the following: employment, upgrading, demotion, or transfer; recruitment or recruitment advertising; layoff or termination; rates of pay or other forms of compensation; and selection for training, including apprenticeship. The Contractor agrees to post in conspicuous places, available to employees and applicants for employment, notices to be provided setting forth the provisions of this nondiscrimination clause.

2. The Contractor will, in all solicitations or advertisements for employees placed by or on behalf of the contractor, state that all qualified applicants will receive consideration for employment without regard to race, creed, color, sex, age, national origin, religion, marital status, political opinion or affiliation, or mental or physical handicap.

3. The Contractor will send to each labor union or representative of workers with which he has a collective bargaining agreement or other contract or understanding, a notice to be provided, advising the said labor union or workers' representatives of the contractor's commitments under this section, and shall post copies of the notice in conspicuous places available to employees and applicants for employment.

4. Each Contractor will comply with all provisions of Article III, Division 2 of Chapter 28 of the Revised Municipal Code, and the rules, regulations, and relevant orders of the Manager and the Director.

5. The Contractor will furnish all information and reports required by Article III, Division 2 of Chapter 28 of the Revised Municipal Code, and by rules, regulations and orders of the Manager and Director or pursuant thereto, and will permit access to his books, records, and accounts by the Manager, Director, or their designee for purposes of investigation to ascertain compliance with such rules, regulations, and orders.

6. In the event of the Contractor's noncompliance with the nondiscrimination clauses of this contract or with any of the said rules, regulations or orders, this contract may be canceled, terminated, or suspended in whole or in part and the Contractor may be declared ineligible for further City contracts in accordance with procedures authorized in Article III, Division 2, Chapter 28 of the Revised Municipal Code, or by rules, regulations, or order of the Manager.

7. The Contractor will include Regulation 12, Paragraph 2 and the provisions of paragraphs (1) through (6) in every subcontract of purchase order unless exempted by rules, regulations, or orders of the Manager issued pursuant to Article III, Division 2, Chapter 28 of the Revised Municipal Code, so that such provisions will be binding on each subcontractor or supplier. The Contractor will take such action with respect to any subcontract or purchase order as the administering agency may direct as a means of enforcing such provisions, including sanctions for noncompliance.

   The applicant further agrees to be bound by the above equal opportunity clauses with respect to its own employment practices when it participates in City contracts. The Contractor agrees to assist and cooperate actively with the Manager and the Director in obtaining compliance of subcontractors and suppliers with the equal opportunity clause and the rules, regulations and relevant orders of the Manager, and will furnish the Manager and the Director such information as they may require for the supervision of compliance, and will otherwise assist the Manager and Director in the discharge of the City's primary responsibility for securing compliance. The Contractor further agrees to refrain from entering into any contract or contract modification

subject to Article III, Division 2 of Chapter 28 of the Revised Municipal Code with a contractor debarred from, or who has not demonstrated eligibility for, City contracts.

The Contractor will carry out such sanctions and penalties for violation of the equal opportunity clause as may be imposed upon contractors and subcontractors by the Manager and Director. In addition, the Contractor agrees that failure or refusal to comply with these undertakings the Manager may take any or all of the following actions:

A. Cancellation, termination, or suspension in whole or in part of this contract.
B. Refrain from extending any further assistance to the applicant under the program with respect to which the failure occurred until satisfactory assurance of future compliance has been received from such applicant.
C. Refer the case to the City Attorney for appropriate legal proceedings.

SUBCONTRACTS: Each prime Contractor or Subcontractor shall include the equal opportunity clause in each of its subcontracts.

CITY AND COUNTY OF DENVER
DEPARTMENT OF PUBLIC WORKS

APPENDIX F

AFFIRMATIVE ACTION REQUIREMENTS

EQUAL EMPLOYMENT OPPORTUNITY

For All Non-Exempt Construction Contracts to Be Awarded by the
City and County of Denver, Department of Public Works.

NOTICE

EACH BIDDER, CONTRACTOR OR SUBCONTRACTOR (HEREINAFTER THE CONTRACTOR) MUST FULLY COMPLY WITH THE REQUIREMENTS OF THESE BID CONDITIONS AS TO EACH CONSTRUCTION TRADE IT INTENDS TO USE ON THIS CONSTRUCTION CONTRACT, AND ALL OTHER CONSTRUCTION WORK (BOTH CITY AND NON-CITY) IN THE DENVER AREA DURING THE PERFORMANCE OF THIS CONTRACT OR SUBCONTRACT. THE CONTRACTOR COMMITS ITSELF TO THE GOALS FOR MINORITY MANPOWER UTILIZATION, AS APPLICABLE, AND ALL OTHER REQUIREMENTS, TERMS AND CONDITION OF THESE BID CONDITIONS BY SUBMITTING A PROPERLY SIGNED BID.

THE CONTRACTOR SHALL APPOINT A COMPANY EXECUTIVE TO ASSUME THE RESPONSIBILITY FOR THE IMPLEMENTATION OF THE REQUIREMENTS, TERMS AND CONDITIONS OF THESE BID CONDITIONS.

/s/ _____

Manager of Public Works
City and County of Denver

A. REQUIREMENTS - AN AFFIRMATIVE ACTION PLAN:

Contractors shall be subject to the provisions and requirements of these bid conditions including the goals and timetables for minority* and female utilization, and specific affirmative action steps set forth by the Division of Small Business Opportunity (DSBO). The contractor's commitment to the goals for minority, and female utilization as required constitutes a commitment that it will make every good faith effort to meet such goals.

1. GOALS AND TIMETABLES:

The goals and timetables for minority and female participation, expressed in percentage terms for the contractor's aggregate workforce in each trade are as follows:

GOALS FOR MINORITY PARTICIPATION FOR EACH TRADE	GOALS FOR FEMALE PARTICIPATION FOR EACH TRADE
From January 1, 1982 to Until Further Notice	From January 1, 1982 to Until Further Notice
21.7% - 23.5%	**6.9%**

The goals for minority and female utilization above are expressed in terms of hours of training and employment as a proportion of the total number of hours to be worked by the contractor's aggregate workforce, which includes all supervisory personnel, in each trade, on all projects for the City and County of Denver during the performance of its contract (i.e., The period beginning with the first day of work on the City and County of Denver funded construction contract and ending with the last day of work).

The hours of minority and female employment and training must be substantially uniform throughout the length of the contract in each trade and minorities and females must be employed evenly on each of a contractor's projects. Therefore, the transfer of minority or female employees from contractor to contractor or from project to project for the purpose of meeting the contractor's goals shall be a violation of these Bid Conditions.

If the Contractor counts the nonworking hours of apprentices they must be employed by the Contractor during the training period; the Contractor must have made a commitment to employ apprentices at the completion of their training subject to the availability of employment opportunities; and the apprentices must be trained pursuant to training programs approved by the Bureau of Apprenticeship and Training.

* "Minority" is defined as including, Blacks, Spanish Surname Americans, Asian Americans, and American Indians, and includes both men and minority women.

2. SPECIFIC AFFIRMATIVE ACTION STEPS:

No contractor shall be found to be in noncompliance solely on account of its failure to meet its goals, but will be given an opportunity to demonstrate that the contractor has instituted all the specific affirmative action steps specified and has made every good faith effort to make these steps work toward the attainment of its goals within the timetables, all to the purpose of expanding minority and female utilization in its aggregate workforce. A contractor, who fails to comply with its obligation under the Equal Opportunity Clause of its contract and fails to achieve its commitments to the goals for minority and female utilization has the burden of proving that it has engaged in an Affirmative Action Program directed at increasing minority and female utilization and that such efforts were at least as extensive and as specific as the following:

a. The Contractor should have notified minority and female organizations when employment opportunities were available and should have maintained records of the organization's response.

b. The Contractor should have maintained a file of the names and addresses of each minority and female referred to it by any individual or organization and what action was taken with respect to each such referred individual, and if the individual was not employed by the Contractor, the reasons. If such individual was sent to the union hiring hall for referral and not referred back by the union or if referred, not employed by the Contractor, the file should have documented this and their reasons.

c. The Contractor should have promptly notified the Department of Public Works, and the Division of Small Business Opportunity when the union or unions with which the Contractor has collective bargaining agreements did not refer to the contractor a minority or female sent by the contractor, or when the Contractor has other information that the union referral process has impeded efforts to meet its goals.

d. The Contractor should have disseminated its EEO policy within its organization by including it in any employee handbook or policy manual; by publicizing it in company newspapers and annual reports and by advertising such policy at reasonable intervals in union publications. The EEO policy should be further disseminated by conducting staff meetings to explain and discuss the policy; by posting of the policy; and by review of the policy with minority and female employees.

e. The Contractor should have disseminated its EEO policy externally by informing and discussing it with all recruitment sources; by advertising in news media, specifically including minority and female news media; and by notifying and discussing it with all subcontractors.

f. The Contractor should have made both specific and reasonably recurrent written and oral recruitment efforts. Such efforts should have been directed at minority and female organizations, schools with substantial minority and female enrollment, and minority and female recruitment and training organizations within the Contractor's recruitment area.

g. The Contractor should have evidence available for inspection that all tests and other selection techniques used to select from among candidates for hire, transfer, promotion, training, or retention are being used in a manner that does not violate the OFCCP Testing Guidelines in 41 CFR Part 60-3.

h. The Contractor should have made sure that seniority practices and job classifications do not have a discriminatory effect.

i. The Contractor should have made certain that all facilities are not segregated by race.

j. The Contractor should have continually monitored all personnel activities to ensure that its EEO policy was being carried out including the evaluation of minority and female employees for promotional opportunities on a quarterly basis and the encouragement of such employees to seek those opportunities.

k. The Contractor should have solicited bids for subcontracts from available minority and female subcontractors engaged in the trades covered by these Bid Conditions, including circulation of minority and female contractor associations.

NOTE: The Director and the Division of Small Business Opportunity will provide technical assistance on questions pertaining to minority and female recruitment sources, minority and female community organizations, and minority and female news media upon receipt of a request for assistance from a contractor.

3. **NON - DISCRIMINATION:**
In no event may a contractor utilize the goals and affirmative action steps required in such a manner as to cause or result in discrimination against any person on account of race, color, religion, sex, marital status, national origin, age, mental or physical handicap, political opinion or affiliation.

4. **COMPLIANCE AND ENFORCEMENT:**
In all cases, the compliance of a contractor will be determined in accordance with its obligations under the terms of these Bid Conditions. All contractors performing or to perform work on projects subject to these Bid Conditions hereby agree to inform their subcontractors in writing of their respective obligations under the terms and requirements of these Bid Conditions, including the provisions relating to goals of minority and female employment and training.

B. CONTRACTORS SUBJECT TO THESE BID CONDITIONS:
In regard to these Bid Conditions, if the Contractor meets the goals set forth therein or can demonstrate that it has made every good faith effort to meet these goals, the Contractor shall be presumed to be in compliance with Article III, Division 2 of Chapter 28 of the Revised Municipal Code, the implementing regulations and its obligations under these Bid Conditions. In the event, no formal sanctions or proceedings leading toward sanctions shall be instituted unless the contracting or administering agency otherwise determines that the contractor is violating the Equal Opportunity Clause.

1. Where the Office of Contract Compliance finds that a contractor failed to comply with the requirements of Article III, Division 2 of Chapter 28 of the Revised Municipal Code or the implementing regulations and the obligations under these Bid Conditions, and so informs the Manager, the Manager shall take such action and impose such sanctions, which include suspension, termination, cancellation, and debarment, as may be appropriate under the Ordinance and its regulations. When the Manager proceeds with such formal action it has the burden of proving that the Contractor has not met the goals contained in these Bid Conditions. The Contractor's failure to meet its goals shall shift to it the requirement to come forward with evidence to show that it has met the good faith requirements of these Bid Conditions.

2. The pendency of such proceedings shall be taken into consideration by the Department of Public Works in determining whether such contractor can comply with the requirements of Article III, Division 2 of Chapter 28 of the Revised Municipal Code, and is therefore a "responsible prospective contractor".

3. The Division of Small Business Opportunity shall review the Contractor's employment practices during the performance of the contract. If the Division of Small Business Opportunity determines that the Contractor's Affirmative Action Plan is no longer an acceptable program, the Director shall notify the Manager.

C. OBLIGATIONS APPLICABLE TO CONTRACTORS:
It shall be no excuse that the union with which the Contractor has a collective bargaining agreement providing for exclusive referral failed to refer minority or female employees. Discrimination in referral for employment, even if pursuant to provisions of a collective bargaining agreement, is prohibited by the National Labor Relations Act, as amended, Title VI of the Civil Rights Act of 1964, as amended, and Article III, Division 2 of Chapter 28 of the Revised Municipal Code. It is the policy of the Department of Public Works that contractors have a responsibility to provide equal employment opportunity, if they wish to participate in City and County of Denver contracts. To the extent they have delegated the responsibility for some of their employment practices to a labor organization and, as a result, are prevented from meeting their obligations pursuant to Article III, Division 2, Chapter 28 of the Revised Municipal Code, such Contractors cannot be considered to be in compliance with Article III, Division 2, Chapter 28 of the Revised Municipal Code, or its implementing rules and regulations.

D. GENERAL REQUIREMENTS:
Contractors are responsible for informing their subcontractors in writing regardless of tier, as to their respective obligations. Whenever a Contractor subcontracts a portion of work in any trade covered by these Bid Conditions, **it shall include these Bid Conditions in such subcontracts and each subcontractor shall be bound by these Bid Conditions to the full extent as if it were the prime contractor.** The Contractor

shall not, however, be held accountable for the failure of its subcontractors to fulfill their obligations under these Bid Conditions. However, the prime contractor shall give notice to the Director of any refusal or failure of any subcontractor to fulfill the obligations under these Bid Conditions. A subcontractor's failure to comply will be treated in the same manner as such failure by a prime contractor.

1. Contractors hereby agree to refrain from entering into any contract or contract modification subject to Article III, Division 2, Chapter 28 of the Revised Municipal Code with a contractor debarred from, or who is determined not to be a "responsive" bidder for the City and County of Denver contracts pursuant to the Ordinance.

2. The Contractor shall carry out such sanctions and penalties for violation of these Bid Conditions and the Equal Opportunity Clause including suspension, termination and cancellation of existing subcontracts and debarment from future contracts as may be ordered by the Manager pursuant to Article III, Division 2, Chapter 28 of the Revised Municipal Code and its implementing regulations.

3. Nothing herein is intended to relieve any contractor during the term of its contract from compliance with Article III, Division 2, Chapter 28 of the Revised Municipal Code, and the Equal Opportunity Clause of its contract with respect to matters not covered in these Bid Conditions.

4. Contractors must keep such records and file such reports relating to the provisions of these Bid Conditions as shall be required by the Office of Contract Compliance.

5. Requests for exemptions from these Bid Conditions must be made in writing, with justification, to the Manager of Public Works, 201 W. Colfax, Dept. 608, Denver, Colorado 80202, and shall be forwarded through and with the endorsement of the Director.

CITY AND COUNTY OF DENVER
DEPARTMENT OF PUBLIC WORKS

CONTRACT NO. 201846567

RIVER NORTH PARK

CONTRACT

THIS CONTRACT AND AGREEMENT, made and entered into by and between the City and County of Denver, a municipal corporation of the State of Colorado, hereinafter referred to as the "City," party of the first part, and, hereinafter referred to as the "Contractor," party of the second part,

Iron Woman Construction & Environmental Services, LLC
5680 Emerson St.
Denver, CO 80216

WITNESSETH, Commencing on **December 28, 2018,** and for at least three (3) days the City advertised that sealed bids would be received for furnishing all labor, tools, supplies, equipment, materials, and everything necessary and required for the following:

CONTRACT NO. 201846567

RIVER NORTH PARK

WHEREAS, bids pursuant to said advertisement have been received by the Manager of Public Works, who has recommended that a Contract for said work be made and entered into with the above-named Contractor who was the lowest, responsive, qualified bidder therefore, and

WHEREAS, said Contractor is now willing and able to perform all of said work in accordance with said advertisement and its bid.

NOW THEREFORE, in consideration of the compensation to be paid the Contractor, the mutual agreements hereinafter contained, and subject to the terms hereinafter stated, it is mutually agreed as follows:

1. CONTRACT DOCUMENTS

It is agreed by the parties hereto that the following list of documents, instruments, technical specifications, plans, drawings and other materials which are attached hereto and bound herewith, incorporated herein by reference or otherwise referenced in these documents constitute and shall be referred to either as the "Contract Documents" or the "Contract," and all of said documents, instruments, technical specifications, Plans, Drawings and other materials taken together as a whole constitute the Contract between the parties hereto, and they are as fully a part of this agreement as if they were set out verbatim and in full herein:

Advertisement of Notice of Invitation for Bids
Instructions to Bidders
Commitment to M/WBE Participation
Article III, Divisions 1, 2, and 3 of Chapter 28, D.R.M.C.
Bid Bond
Addenda (as applicable)
Equal Employment Opportunity Provisions (Appendix A and Appendix F)

Bid Form
Contract Form
General Contract Conditions
Special Contract Conditions
Performance and Payment Bond
Notice to Apparent Low Bidder
Notice to Proceed
Contractor's Certification of Payment Form
Final/Partial Lien Release Form
Certificate of Contract Release
Change Orders (as applicable)
Federal Requirements (as applicable)
Prevailing Wage Rate Schedule(s)
Technical Specifications
Contract Drawings
Accepted Shop Drawings

2. SCOPE OF WORK

The Contractor agrees to and shall furnish all labor, tools, supplies, equipment, materials and everything necessary for and required to do, perform and complete all of the Work described, drawn, set forth, shown and included in said Contract Documents.

3. TERMS OF PERFORMANCE

The Contractor agrees to undertake the performance of the Work under this Contract within ten (10) days after being notified to commence work by issuance of a Notice to Proceed in substantially the form contained herein from the Manager and agrees to fully complete said Work within **300** (Three Hundred Days) consecutive calendar days from the effective date of said Notice, plus such extension or extensions of time as may be granted in accordance with the provisions of the General Contract Conditions and any applicable Special Contract Conditions.

4. TERMS OF PAYMENT

The City agrees to pay the Contractor for the performance of all of the Work required under this Contract, and the Contractor agrees to accept as the Contractor's full and only compensation therefore, such sum or sums of money as may be proper in accordance with the price or prices set forth in the Contractor's Bid Form hereto attached and made a part hereof for **Schedule A (bid item numbers 201 through 630 (50 bid items)) plus Schedule B (bid items 011100-1 through 334600-2 (145 bid items)) for a total of (195 bid items)**, the total estimated cost thereof being: **Four Million Eight Hundred Sixty-Two Thousand Eight Hundred Seventy-Three Dollars and Ninety-One Cents ($4,862,873.91).** Adjustments to said Contract Amount and payment of amounts due hereunder shall be made in accordance with the provisions of the General Contract Conditions and any applicable Special Contract Conditions.

5. NO DISCRIMINATION IN EMPLOYMENT

In connection with the performance of work under this contract, the Contractor may not refuse to hire, discharge, promote or demote, or discriminate in matters of compensation against any person otherwise qualified, solely because of race, color, religion, national origin, gender, age, military status, sexual orientation, gender identity or gender expression, marital status, or physical or mental disability. The Contractor shall insert the foregoing provision in all subcontracts.

6. COMPLIANCE WITH M/WBE REQUIREMENT

This Contract is subject to all applicable provisions of Divisions 1and 3 of Article III, of Chapter 28, Denver Revised Municipal Code (D.R.M.C.), designated as Sections 28-31 – 28-36 and 28-52 – 28-90 D.R.M.C. and referred to in this Contract as the "M/WBE Ordinance". Without limiting the general applicability of the foregoing, the Contractor acknowledges its continuing duty, pursuant to Sections 28-72, 28-73 and 28-75 of the D.R.M.C., to maintain throughout the duration of this Contract, compliance with the level of minority and Woman business enterprise participation, upon which the City approved the award of this Contract to the Contractor and the Contractor further acknowledges that failure to maintain such participation commitments or otherwise comply with the requirements of the M/WBE Ordinance shall subject the

Contractor to sanctions in accordance with Section 28-77 of the D.R.M.C. Nothing contained in this provision or in the M/WBE Ordinance shall negate the City's right to prior approval of subcontractors, or substitutes therefore, under this Contract

7. WAGE RATE REQUIREMENTS

In performance of all Work hereunder, the Contractor agrees to comply with and be bound by all requirements and conditions of the City's Payment of Prevailing Wages Ordinance, Sections 20-76 through 20-79, D.R.M.C. and any determinations made by the City pursuant thereto.

8. APPLICABILITY OF LAWS

The Agreement between the Contractor and the City shall be deemed to have been made in the City and County of Denver, State of Colorado and shall be subject to, governed by, and interpreted and construed by or in accordance with the laws of the State of Colorado and the Charter, Revised Municipal Code, Rules, Regulations, Executive Orders and fiscal rules of the City. As such, the Contractor shall at all times comply with the provisions of the Charter, Revised Municipal Code, Rules, Regulations, Executive Orders and fiscal rules of the City, and those State of Colorado and Federal Laws, Rules and Regulations, which in any manner limit, control or apply to the actions or operations of the Contractor, any subcontractors, employees, agents or servants of the Contractor engaged in the Work or affecting the materials and equipment used in the performance of the Work, as the same may be, from time to time, promulgated, revised or amended. The Charter and Revised Municipal Code of the City and County of Denver, as the same may be amended from time to time, are hereby expressly incorporated into this Agreement as if fully set out herein by this reference.

9. APPROPRIATION

The amount of money, which has been appropriated and encumbered for the purpose of this contract, to date, is equal to or in excess of the Contract Amount. The Manager, upon reasonable written request, will advise the Contractor in writing of the total amount of appropriated and encumbered funds, which remain available for payment for all Work under the Contract.

The issuance of any change order or other form or order or directive by the City which would cause the aggregate payable under the contract to exceed the amount appropriated for the contract is expressly prohibited. In no event shall the issuance of any change order or other form of order or directive by the City be considered valid or binding if it requires additional compensable work to be performed, which work will cause the aggregate amount available under the Contract to exceed the amount appropriated and encumbered for this Contract, unless and until such time as the Contractor has been advised in writing by the Manager that a lawful appropriation, sufficient to cover the entire cost of such additional work, has been made.

It shall be the responsibility of the Contractor to verify that the amounts already appropriated for this Contract are sufficient to cover the entire cost of such work, and any work undertaken or performed in excess of the amount appropriated is undertaken or performed in violation of the terms of this contract, without the proper authorization for such work, and at the Contractor's own risk.

10. APPROVALS

In the event this Contract calls for the payment by the City of five hundred thousand dollars ($500,000.00) or more, approval by the Board of Councilmen of the City and County of Denver, acting by ordinance, in accordance with Section 3.2.6 of the Charter of the City and County of Denver, is and shall be an express condition precedent to the lawful and binding execution and effect and performance of this contract.

11. ASSIGNMENT

The Contractor shall not assign any of its rights, benefits, obligations or duties under this Contract except upon the prior written consent and approval of the Manager to such assignment.

12. DISPUTES RESOLUTION PROCESS

It is the express intention of the parties to this Contract that all disputes of any nature whatsoever regarding the Contract including, but not limited to, any claims for compensation or damages arising out of breach or default under this Contract, shall be resolved by administrative hearing pursuant to the provisions of Section 56-106, D.R.M.C., or, as applicable, Section 28-33 D.R.M.C. for Minority and Woman Business Enterprise disputes. The Contractor expressly agrees that this dispute resolution process is the only dispute resolution mechanism that will be recognized by the parties for any claims put forward by the Contractor,

notwithstanding any other claimed theory of entitlement on the part of the Contractor or its subcontractors or suppliers.

13. CONTRACT BINDING

It is agreed that this Contract shall be binding on and inure to the benefit of the parties hereto, their heirs, executors, administrators, assigns and successors.

14. PARAGRAPH HEADINGS

The captions and headings set forth herein are for convenience of reference only and shall not be construed so as to define or limit the terms and provisions hereof.

15. SEVERABILITY

It is understood and agreed by the parties hereto that, if any part, term, or provision of this Contract, except for the provisions of this Contract requiring prior appropriation and limiting the total amount to be paid by the City, is by the courts held to be illegal or in conflict with any law of the State of Colorado, the validity of the remaining portions or provisions shall not be affected, and the rights and obligations of the parties shall be construed and enforced as if the Contract did not contain the particular part, term or provision held to be invalid.

16. ELECTRONIC SIGNATURES AND ELECTRONIC RECORDS:

Contractor consents to the use of electronic signatures by the City. The Agreement, and any other documents requiring a signature hereunder, may be signed electronically by the City in the manner specified by the City. The Parties agree not to deny the legal effect or enforceability of the Agreement solely because it is in electronic form or because an electronic record was used in its formation. The Parties agree not to object to the admissibility of the Agreement in the form of an electronic record, or a paper copy of an electronic document, or a paper copy of a document bearing an electronic signature, on the ground that it is an electronic record or electronic signature or that it is not in its original form or is not an original.

Contract Control Number: PWADM-201846567-00

Contractor Name: Iron Woman Construction & Environmental Services, LLC

IN WITNESS WHEREOF, the parties have set their hands and affixed their seals at Denver, Colorado as of

SEAL

CITY AND COUNTY OF DENVER

ATTEST:

By_____

_____

APPROVED AS TO FORM:

Attorney for the City and County of Denver

By_____

REGISTERED AND COUNTERSIGNED:

By_____

By_____

By_____

IN WITNESS WHEREOF, the parties have executed this agreement and affixed their seals at Denver, Colorado as of the day first above written.

Contract Control Number: 201846567

Vendor Name: Iron Woman Construction & Environmental Services, LLC

By: _____

Name: Shaun S. Egan
(please print)

Title: Pres & CEO
(please print)

ATTEST: [if required]

By: _____

Name: Shaun S. Egan
(please print)

Title: Secretary
(please print)

CITY AND COUNTY OF DENVER
DEPARTMENT OF PUBLIC WORKS

General Contract Conditions

INDEX

TITLE 1
DEFINITIONS **1**
101 CITY 1
102 CONTRACT 1
103 CONTRACT AMOUNT 1
104 CONTRACT DOCUMENTS 1
105 CONTRACT TIME 1
106 CONTRACTOR 2
107 CONTRACTOR PERSONNEL 2
108 DAYS 2
109 DEPUTY MANAGER 2
110 DESIGNER 2
111 FINAL COMPLETION 2
112 MANAGER 3
113 PRODUCT DATA 3
114 PROJECT 3
115 PROJECT MANAGER 3
116 SAMPLES 3
117 SHOP DRAWINGS 3
118 SUBCONTRACTOR 3
119 SUBSTANTIAL COMPLETION 3
120 SUPPLIER 4
121 WORK 4

TITLE 2
CITY ADMINISTRATIVE ORGANIZATIONS; LINE OF AUTHORITY **5**
201 DEPARTMENT OF AVIATION 5
202 MANAGER OF AVIATION 5
203 DEPARTMENT OF PUBLIC WORKS 5
204 MANAGER OF PUBLIC WORKS 5
205 BUILDING INSPECTION 5
206 ZONING 5
207 DIVISION OF SMALL BUSINESS OPPORTUNITY 6
208 CITY AUDITOR 6
209 MANAGER OF FINANCE 6
210 CITY ATTORNEY 6
211 OFFICE OF RISK MANAGEMENT 6
212 CITY'S CONTRACT ADMINISTRATION LINE OF AUTHORITY 6
213 CITY'S COMMUNICATION WITH THE CONTRACTOR 7

TITLE 3
CONTRACTOR PERFORMANCE AND SERVICES 8
301 CONSIDERATION (CONTRACTOR'S PROMISE OF PERFORMANCE) 8
302 NOTICE TO PROCEED AND COMPLETION OF THE WORK 8
303 EXACT CONTRACTOR PERFORMANCE 8
304 SUBSTITUTED PERFORMANCE 8
305 WORK PERFORMED UNDER ADVERSE WEATHER CONDITIONS 9
306 WORKING HOURS AND SCHEDULE 9
307 CONTRACTOR'S SUPERINTENDENT 10
308 COMMUNICATIONS 10
309 CONTRACTOR SUBMITTALS AND OTHER WRITTEN COMMUNICATIONS TO THE CITY 10
310 COMPETENCE OF CONTRACTOR'S WORK FORCE 11
311 NO EMPLOYMENT OF ILLEGAL ALIENS TO PERFORM WORK UNDER THE CONTRACT 11
312 CONDUCT OF CONTRACTOR'S PERSONNEL 12
313 SUGGESTIONS TO CONTRACTOR 12
314 WORK FORCE 12
315 CONSTRUCTION MACHINES AND STANDBY EQUIPMENT 13
316 CUTTING AND PATCHING THE WORK 13
317 PERMITS AND LICENSES 13
318 CONSTRUCTION SURVEYS 14
319 PRESERVATION OF PERMANENT LAND SURVEY CONTROL MARKERS 14
320 TRADEMARKS, COPYRIGHTS AND PATENTED DEVICES, MATERIALS, AND PROCESSES 15
321 PROJECT SIGNS 15
322 PUBLICITY AND ADVERTISING 16
323 TAXES 16
324 DOCUMENTS AND SAMPLES AT THE SITE 17
325 CLEANUP DURING CONSTRUCTION 17
326 SANITARY FACILITIES 18
327 POWER, LIGHTING, HEATING, VENTILATING, AIR CONDITIONING AND WATER SERVICES 18

TITLE 4
CONTRACT DOCUMENTS (DRAWINGS AND TECHNICAL SPECIFICATIONS) 19
401 CONTRACT DOCUMENTS - REVIEW AND INTERPRETATION 19
402 OWNERSHIP OF CONTRACT DRAWINGS AND TECHNICAL SPECIFICATIONS 20
403 CONTRACT DRAWINGS AND TECHNICAL SPECIFICATIONS ISSUED TO THE CONTRACTOR 20
404 REQUESTS FOR INFORMATION OR CLARIFICATION 21
405 SHOP DRAWINGS, PRODUCT DATA AND SAMPLES 21
406 SUBSTITUTION OF MATERIALS AND EQUIPMENT 22

TITLE 5
SUBCONTRACTS 24
501 SUBCONTRACTS 24
502 SUBCONTRACTOR ACCEPTANCE 24

TITLE 6
TIME OF COMMENCEMENT AND COMPLETION 27
601 BEGINNING, PROGRESS AND TIME OF COMPLETION 27
602 LIQUIDATED DAMAGES; ADMINISTRATIVE COSTS; ACTUAL DAMAGES 27

603 DELAY DAMAGES 28

TITLE 7
COOPERATION, COORDINATION AND RATE OF PROGRESS 29
701 COOPERATION WITH OTHER WORK FORCES 29
702 COORDINATION OF THE WORK 30
703 COORDINATION OF PUBLIC CONTACT 30
704 RATE OF PROGRESS 30

TITLE 8
PROTECTION OF PERSONS AND PROPERTY 32
801 SAFETY OF PERSONS 32
802 PROTECTIVE DEVICES AND SAFETY PRECAUTIONS 33
803 PROTECTION OF PROPERTY AND WORK IN PROGRESS 33
804 PROTECTION OF MUNICIPAL, PUBLIC SERVICE OR PUBLIC UTILITY SYSTEMS 34
805 PROTECTION OF STREET AND ROAD SYSTEM 35
806 PROTECTION OF DRAINAGE WAYS 36
807 PROTECTION OF THE ENVIRONMENT 36
808 HAZARDOUS AND EXPLOSIVE MATERIALS OR SUBSTANCES 37
809 ARCHAEOLOGICAL AND HISTORICAL DISCOVERIES 37

TITLE 9
COMPENSATION 38
901 CONSIDERATION (CITY'S PROMISE TO PAY) 38
902 PAYMENT PROCEDURE 38
903 SCHEDULE OF VALUES IN LUMP SUM CONTRACTS 39
904 UNIT PRICE CONTRACTS 39
905 PROGRESS PERIOD 39
906 APPLICATIONS FOR PAYMENT 40
907 RELEASES AND CONTRACTORS CERTIFICATIONS OF PAYMENT 41
908 RETAINAGE 41
909 ADDITIONAL WITHHOLDING OF PROGRESS PAYMENTS 42
910 FINAL ESTIMATE AND PAYMENT 43
911 ACCOUNTING OF COSTS AND AUDIT 43

TITLE 10
WAGE 45
1001 PREVAILING WAGE ORDINANCE 45
1002 POSTING OF THE APPLICABLE WAGE RATES 45
1003 RATE AND FREQUENCY OF WAGES PAID 45
1004 REPORTING WAGES PAID 45
1005 FAILURE TO PAY PREVAILING WAGES 46

TITLE 11
CHANGES IN THE WORK, CONTRACT PRICE OR CONTRACT TIME 47
1101 CHANGE ORDER 47
1102 CITY INITIATED CHANGES 47
1103 CONTRACTOR CHANGE REQUEST 48
1104 ADJUSTMENT TO CONTRACT AMOUNT 51
1105 TIME EXTENSIONS 54

TITLE 12
CONTRACTOR CLAIMS FOR ADJUSTMENT AND DISPUTES 56
1201 NOTICE OF INTENT TO CLAIM 56
1202 SUBMITTAL OF CLAIMS 56
1203 WAIVER OF CLAIMS 58

TITLE 13
DISPUTES 59
1301 DISPUTES 59

TITLE 14
SITE CONDITIONS 60
1401 DIFFERING SITE CONDITIONS 60
1402 SITE INSPECTIONS AND INVESTIGATIONS 60

TITLE 15
PERFORMANCE AND PAYMENT BONDS 62
1501 SURETY BONDS 62
1502 PERFORMANCE BOND 62
1503 PAYMENT BOND 62

TITLE 16
INSURANCE AND INDEMNIFICATION 63
1601 INSURANCE 63
1602 DEFENSE AND INDEMNIFICATION 63

TITLE 17
INSPECTION AND DEFECTS 64
1701 CONSTRUCTION INSPECTION BY THE CITY 64
1702 AUTHORITY OF INSPECTORS 64
1703 OBSERVABLE DEFECTS 64
1704 DEFECTS - UNCOVERING WORK 64
1705 LATENT DEFECTS 65
1706 REMOVAL OF DEFECTIVE MATERIALS AND WORK 65

TITLE 18
WARRANTIES, GUARANTEES AND CORRECTIVE WORK 66
1801 CONTRACTOR'S WARRANTIES, GUARANTEES AND CORRECTION OF WORK 66
1802 PERFORMANCE DURING WARRANTY PERIOD 67

TITLE 19
SUBSTANTIAL COMPLETION OF THE WORK 69
1901 CONTRACTOR'S NOTICE OF SUBSTANTIAL COMPLETION 69
1902 INSPECTION AND PUNCH LIST 69
1903 CERTIFICATE OF SUBSTANTIAL COMPLETION 69
1904 RIGHT OF EARLY OCCUPANCY OR USE 69

TITLE 20
FINAL COMPLETION AND ACCEPTANCE OF THE WORK 71
2001 CLEAN-UP UPON COMPLETION 71
2002 FINAL COMPLETION AND ACCEPTANCE OF THE WORK 71
2003 FINAL SETTLEMENT 71

TITLE 21
SUSPENSION OF WORK 74
2101 SUSPENSION OF WORK 74
2102 SUSPENSION OF THE WORK FOR THE CITY'S CONVENIENCE 74
2103 SUSPENSION BECAUSE OF ORDER OF CITY, STATE OR FEDERAL COURT OR AGENCY 75
2104 SUSPENSION RESULTING FROM CONTRACTOR'S FAILURE TO PERFORM 75

TITLE 22
CITY'S RIGHT TO TERMINATE THE CONTRACT 76
2201 TERMINATION OF CONTRACT FOR CAUSE 76
2202 TERMINATION OF CONTRACT FOR CONVENIENCE OF THE CITY 77

TITLE 23
MISCELLANEOUS PROVISIONS 80
2301 PARTIES TO THE CONTRACT 80
2302 FEDERAL AID PROVISIONS 80
2303 NO WAIVER OF RIGHTS 80
2304 NO THIRD PARTY BENEFICIARY 80
2305 GOVERNING LAW; VENUE 81
2306 ABBREVIATIONS 81
2307 STATUTE OF LIMITATIONS IN C.R.S. § 13-80-102(1)(h) 81

CITY AND COUNTY OF DENVER
DEPARTMENT OF PUBLIC WORKS

SPECIAL CONTRACT CONDITIONS

SC-1 CONSTRUCTION SPECIFICATIONS

Except as amended herein or in the attached Technical Specifications, all Work performed under the terms of this Contract shall be governed by the applicable provisions of the following latest editions:

City and County of Denver:

Standard Specifications for Construction, GENERAL CONTRACT CONDITIONS, 2011 Edition.

Transportation Standards and Details for the Engineering Division

City and County of Denver Traffic Standard Drawings

Wastewater Management Division
– *Standard Detail Drawings*
– *Public Works Wastewater Capital Projects Management Standard Construction Specifications*

Colorado Department of Transportation:

Standard Specifications for Road and Bridge Construction
(Sections 200 through 700 of the 2011 Edition)

Federal Highway Administration:

Manual on Uniform Traffic Control Devices for Streets & Highways (MUTCD)

Building & Fire Codes:

Building Code of the City and County of Denver
(International Building Code 2015 Series, City and County of Denver Amendments 2016)

National Fire Protection Association Standards
(As referenced in the Building Code of the City and County of Denver)

The aforementioned City and County of Denver documents are available for review at the Capital Projects Management Office, 201 W. Colfax Ave., Dept. 506, (5th floor), Denver, CO 80202. The *Standard Specifications for Construction*, *GENERAL CONTRACT CONDITIONS* is available at: https://www.denvergov.org/content/denvergov/en/contract-administration/contractor-resources.html . *Transportation Standards and Details for the Engineering Division* and the Wastewater Management Division – *Standard Detail Drawings*, are available at http://www.denvergov.org.

The "*Colorado Department* of *Transportation Standard Specifications for Road and Bridge Construction"* is available for review on CDOT's website at http://www.coloradodot.info/ and can be purchased from the Colorado Department of Transportation.

The *Manual on Uniform Traffic Control Devices for Streets & Highways* is available for review at the Federal Highway Administration Website at: www.fhwa.dot.gov, The FHWA website also contains purchasing information.

SC-2 DEPUTY MANAGER / CITY ENGINEER

General condition 109 DEPUTY MANAGER is hereby deleted in its entirety and replaced with the following:

The "Deputy Manager" means the official who reports directly to the Manager and exercises supervisory responsibility in the City agency defined in Title 2 herein that is responsible for the Project. The Manager hereby designates the City Engineer as the Deputy Manager for purposes of this Contract. The City Engineer shall have responsibility for this Project and shall undertake all duties, responsibilities, rights and authority, including specific actions and decisions, delegated to the Deputy Manager under the various terms and conditions of this Contract.

SC-3 ENGINEERING DIVISION / CITY ENGINEER

The Engineering Division is a unit of the Department of Public Works and is supervised by the City Engineer, who is subordinate to the Manager of Public Works. This Division is responsible for the planning, design, construction, operation and maintenance of all of the City's transportation facilities and the planning, design and construction of all of the City's wastewater facilities, except for the City's Municipal Airport System. All other references to the Transportation Division or the Deputy Manager of Public Works for Transportation are deleted and replaced with references to the Engineering Division and City Engineer, respectively.

SC-4 WASTEWATER MANAGEMENT DIVISION

The Wastewater Management Division is a unit of the Department of Public Works and is supervised by the Deputy Manager of Public Works for Wastewater Management, who is subordinate to the Manager of Public Works. This Division is responsible for the operation and maintenance of the City's wastewater facilities.

SC-5 CITY DELEGATION OF AUTHORITY

With reference to General Contract Condition 109, DEPUTY MANAGER and General Contract Condition 212, CITY'S CONTRACT ADMINISTRATION LINE OF AUTHORITY, the Manager hereby designates the City Engineer as the City official responsible for those certain actions and decisions designated as the responsibility of the Deputy Manager under the General Conditions and delegates to the City Engineer the authority necessary to undertake those responsibilities under this Contract. The Director shall have supervisory responsibility over the Project Manager. Additionally, Contractor questions concerning the Plans and Technical Specifications shall be directed to:

Denver Department of Public Works / Engineering Division,

Project Manager		Telephone
Owen Snell (Parks and Recreation)		720-913-0618
Laura Wasson (Public Works)		720-865-3045
Design Consultant	Name	Telephone
Wenk Associates	Ty Sturgeon	303-628-0003

SC-6 LIQUIDATED DAMAGES; MILESTONES; ACTUAL DAMAGES

.1 Time is of the essence in performing the Contract. In the event the Contractor fails to achieve the milestones described below or fails to meet any other time requirement or the time limit set forth in the Contract (See Milestone Schedule SC 6.5 below), after due allowance for any extension or extensions of time made in accordance with the provisions herein set forth, the Contractor shall be liable to the City for liquidated damages, and not as a penalty, in the amount stipulated therefore in the Contract Form or in the Special Conditions. Such liquidated damages shall be assessed for each and every Day that the Contractor shall be in default, as established by said time limit or limits. The City shall have the right to deduct said liquidated damages from any amount due or that may become due the Contractor, or to collect such liquidated damages from the Contractor or its surety.

.2 Liquidated damages in the amount stipulated do not include any sums of money to reimburse the City for actual damages which may be incurred between Substantial Completion and Final Completion

because of the Contractor's failure to achieve Final Completion within the Contract Time. For such delay in Final Completion, the Contractor shall reimburse the City, as a mitigation of City damages and not as a penalty, those administrative costs incurred by the City as a result of such failure. Representative hourly rates for such administrative costs are set out in the Special Conditions. The Project Manager shall calculate the City's administrative costs based on such Special Conditions, as the same may be revised from time to time.

Representative hourly rates for the City administrative costs shall be as follows for this Project:

Project Manager	$69 per hour
Project Engineer	$63 per hour
Inspector	$49 per hour
Surveying, if necessary	$100 per hour

.3 Liquidated damages in the amounts stipulated do not include any sums of money to reimburse the City for extra costs which the City may become obligated to pay on other contracts which were delayed or extended because of the Contractor's failure to complete the Work within the Contract Time. Should the City incur additional costs because of delays or extensions to other contracts resulting from the Contractor's failure of timely performance, the City will assess these extra costs against the Contractor, and these assessments will be in addition to the stipulated liquidated damages.

.4 The City reserves all of its rights to actual damages from the Contractor for injury or loss suffered by the City from actions or omissions of the Contractor, including but not limited to any other breach or default of the Contract, outside of the scope of the above sections of GC 602.

.5 The Parties recognize and agree that time is of the essence on this Contract. Due to the time sensitivities, the Contract establishes multiple milestones based on the date the Notice to Proceed is issued by the City. Milestone completion shall be achieved per the Milestone Schedule listed herein. If Substantial Completion is not reached by the last day of the individual milestone work window, liquidated damages will be assessed by the City to the contractor in the amount of $1,500.00 per calendar day. Completion for the purposes of this section 602.5 shall include all work completed per the Contract and any executed change orders and any executed amendments.

.6 Milestone Schedule:

Milestone	Location	Milestone Work Window
1	Schedule A (Festival Street)	NTP to September 30, 2019
2	Schedule B (RiNo Park)	NTP plus 300 days

SC-7 SUBCONTRACTS

In accordance with General Contract Condition 501, SUBCONTRACTS, no limit shall apply to that percentage of the Work, which may be sublet providing that the subcontractors receive prior approval in accordance with General Contract Condition 502, SUBCONTRACTOR ACCEPTANCE.

SC-8 RESERVED

SC-9 PAYMENTS TO CONTRACTORS

The application for payment shall be submitted through Textura® Corporations Construction Management Website. Contractor recognizes and agrees that it shall be required to use the Textura Construction Payment Management System for this Project to request payment from the City and to pay subcontractors. All certified subcontractors or suppliers who are listed for participation towards any assigned program goal must be paid via Textura®**.** Contractor further agrees that, to the fullest extent possible within Textura, the City shall be entitled to all non-Confidential records, reports, data and other information related to the project that are available to Contractor through Textura, including, but not limited to, information related to Contractor and subcontractor billings. To that end, Contractor agrees it will activate any available settings within Textura

necessary to grant the City access to such non-Confidential information related to the contract and the project. Applications for payment shall be based on the Contract Unit Prices or the approved Schedule of Values described in GC 903.1

In accordance with General Contract Condition 902, PAYMENT PROCEDURE, the party(ies) responsible for review of all Pay Applications shall be:

Agency/Firm	Name	Telephone
Public Works	Laura Wasson	720-865-3045

In accordance with General Contract Condition 906, APPLICATIONS FOR PAYMENT, each Application submitted shall include the following:

1. The estimate of Work completed shall be based on the approved schedule of values or unit prices, as applicable, and the percent of the Work complete.
2. Each Application for Payment shall include each and every independent subcontractor's payroll information including pay dates and pay amounts.
3. The Contractor shall also submit to the Auditor and other appropriate officials of the City in a timely fashion, information required by General Contract Condition 1004, REPORTING WAGES PAID.
4. Applications for Payment must be accompanied by completed Partial or Final Claim Release Form, as appropriate, from EACH subcontractor and supplier, **AND** the Contractors' Certification of Payment Form (CCP), unless an exception is approved pursuant to General contract condition 907.

The forms, Final/Partial Release and Certificate of Payment (Subcontractor/Supplier) and the Contractor's Certification of Payment (CCP), both of which must be used are attached below. If subcontractor or supplier payments are disbursed via Textura® CPM, those systems generated Release and CCP forms are acceptable.

DEPARTMENT OF PUBLIC WORKS

FINAL/PARTIAL RELEASE AND CERTIFICATE OF PAYMENT
(SUBCONTRACTOR/SUPPLIER)

_____ Date: _____, 20___.
(PROJECT NO. and NAME)

_____ Subcontract #:_____.
(NAME OF CONTRACTOR)

Subcontract Value: $_____.

_____ Last Progress Payment: $_____.
(NAME OF SUBCONTRACTOR/SUPPLIER) Date: _____.

Check Applicable Box: Total Paid to Date: $_____.

[ ] MBE [ ] WBE Date of Last Work: _____.

The Undersigned hereby certifies that all costs, charges or expenses incurred by the undersigned or on behalf of the undersigned for any work, labor or services performed and for any materials, supplies or equipment provided on the above referenced Project or used in connection with the above referenced Subcontract (the "Work Effort") have been duly paid in full.

The Undersigned further certifies that each of the undersigned's subcontractors and suppliers that incurred or caused to be incurred, on their behalf, costs, charges or expenses in connection with the undersigned's Work Effort on the above referenced Project have been duly paid in full.

In consideration of $_____ representing the Last Progress Payment referenced above and in further consideration of the Total Paid to Date, also referenced above, and other good and valuable consideration received and accepted by the undersigned this _____ day of _____, 20__, the Undersigned hereby releases and discharges the City and County of Denver (the "City"), the above referenced City Project, the City's premises and property and the above referenced Contractor from all claims, liens, rights, liabilities, demands and obligations, whether known or unknown, of every nature arising out of or in connection with the performance of the work effort.

As additional consideration for the payments referenced above, the undersigned agrees to defend, indemnify and save and hold harmless the City, its officers, employees, agents and assigns and the above-referenced Contractor from and against all costs, losses, damages, causes of action, judgments under the subcontract and expenses arising out of or in connection with any claim or claims against the City or the Contractor which arise out of the Undersigned's performance of the Work Effort and which may be asserted by the Undersigned or any of its suppliers or subcontractors of any tier or any of their representatives, officers, agents, or employees.

It is acknowledged that this release is for the benefit of and may be relied upon by the City and the referenced Contractor.

The foregoing shall not relieve the undersigned of any obligation under the provisions of the Undersigned's subcontract, as the subcontract may have been amended, which by their nature survive completion of the Undersigned's work effort including, without limitation, warranties, guarantees, insurance requirements and indemnities.

STATE OF COLORADO) ss.
CITY OF _____)

_____
(Name of Subcontractor)

Signed and sworn before me this
day of _____, 20___. By:_____

_____.
Notary Public/Commissioner of Oaths Title: _____
My Commission Expires

DENVER
OFFICE OF ECONOMIC DEVELOPMENT

City and County of Denver

Division of Small Business Opportunity

Contractor's/Consultant's Certification of Payment (CCP)

Office of Economic Development
Compliance Unit
201 W. Colfax Ave., Dept. 907
Denver, CO 80202
Phone: 720.913.1999

Prime Contractor or Consultant:	Phone:	Project Manager:
Pay Application #:	Pay Period:	Amount Requested: $
Project #:	Project Name:	
Current Completion Date:	Percent Complete:	Prepared By:
(I) - Original Contract Amount: $	(II) - Current Contract Amount: $	

		A	B	C	D	E	F	G	H
Prime/Subcontractor/Supplier Name	M/W/S/E DBE/ NON	Original Contract Amount	% Bid (A/I)	Current Contract Amount including Amendments	% Revised (C/II)	Requested Amount of this Pay Application	Amount Paid on the Previous Pay Application # ____	Net Paid To Date	Paid % Achieved (G/II)
Totals									

The undersigned certifies that the information contained in this document is true, accurate and that the payments shown have been made to all subcontractors and suppliers used on this project and listed herein. Please use an additional form, if more space is necessary.

Prepared By (Signature):	**Date:**

COMP-FRM-027 rev 031816

DENVER
OFFICE OF ECONOMIC DEVELOPMENT

Instructions for Completing the Contractor/Consultant Certification of Payment Form

Office of Economic Development
Division of Small Business Opportunity
Compliance Unit
201 W. Colfax Ave. Dept. 907
Denver, CO 80202
Phone: 720-913-1999
DSBO@denvergov.org

Note: The attached Contractor/Consultant Certification of Payment form must be completed by the Contractor/ Subconsultant and all subcontractors/subconsultant or suppliers used on the project at **any tier** and submitted with each pay application. The Contractor/Consultant is responsible for the accuracy of all information provided and is required to have each subcontractor/subconsultant or supplier fill out the appropriate forms. Please be sure to complete all information requested at the top of the form, including the name of the person who prepared this form.

If you reproduce this form, you must continue to list each of the originally listed firms, as well as any additional firms used during the performance period of the contract. Please complete an additional CCP if there is second tier-ing involved.

If you have any questions, please call the Compliance Unit of DSBO at 720.913.1999.

Instructions for Completing the Contractor/Consultant Certification of Payment Form, per Column

Contractor/Subcontractor or Subconsultant/Supplier Name: In the space provided, list all subcontractors/ subconsultants and suppliers used on the project. For all M/W/S/E/DBEs use the exact name listed in the DSBO Directory.

M/W/S/E/DBE/NON: For each name listed, indicate whether the entity is a certified M/W/S/E/DBE.

Column A: Provide the contract amount, as listed at bid time, for the Contractor/Consultant and each subcontractor/subconsultant or supplier.

Column B: Provide the percentage portion of each listed subcontractor/subconsultant or supplier contract amount (Column A) compared to the total original contract amount in (I).

Column C: Provide the original contract amount (Column A) for each subcontractor/subconsultant or supplier plus any awarded alternate and/or change order amounts applicable. If an alternate/change order does not apply to the listed firm, re-enter the original contract amount (Column A).

Column D: Provide the percent portion of each listed subcontractor/subconsultant or supplier contract amount (Column C) compare to the current total contract amount in (II).

Column E: Provide the amount requested for work performed or materials supplied by each listed subcontractor/subconsultant or supplier for this pay application. The sum of the items in this column should equal the estimated amount requested for this pay application.

Column F: Provide the amount paid to each subcontractor/subconsultant or supplier on the previous pay application. Enter the previous pay application number in the column heading. The sum of the items listed in this column should equal the warrant amount paid to the Contractor/Consultant on the previous pay application. The amounts paid to the subcontractor/subcontractor or suppliers should be the actual amount of each check issued.

Column G: Provide the net paid to date for the Contractor/Subconsultant and each listed subcontractor/subconsultant or supplier.

Column H: Provide the percent portion of the net paid to date (Column G) for the Contractor/Subconsultant and each listed subcontractor/subconsultant or supplier of the current total contract amount in (II).

Rev 031816

SC-10 CONTRACT FORMS

In accordance with the terms and conditions of the Contract Documents, the City requires the use of certain form documents in complying with or satisfying various obligations, notifications and conditions in contracting with the City or performing Work hereunder. These form documents are referenced by title throughout the Contract Documents for mandatory use as directed. The following are the forms that shall be detached and utilized in accordance with the Contract Documents:

1. Performance and Payment Bond
2. Performance and Payment Bond Surety Authorization Letter (Sample)
3. Final/Partial Lien Release.

The following are forms that will be issued by the City during construction:

1. Notice to Apparent Low Bidder (Sample)
2. Notice to Proceed (Sample)
3. Certificate of Contract Release (Sample)

SC-11 CONSTRUCTION INSPECTION BY THE CITY

General Condition 1701, CONSTRUCTION INSPECTION BY THE CITY, is modified as follows:

.1 Persons who are employees of the City or who are under contract to the City or the City as lessee will be assigned to inspect and test the Work. These persons may perform any tests and observe the Work to determine whether or not designs, materials used, manufacturing and construction processes and methods applied, and equipment installed satisfy the requirements of the drawings and specifications, accepted Shop Drawings, Product Data and Samples, and the General Contractor's warranties and guarantees. The General Contractor shall permit these inspectors unlimited access to the Work and provide means of safe access to the Work, which cost shall be included as a Cost of the Work without any increase to the Guaranteed Maximum Price. In addition, General Contractor shall provide whatever access and means of access are needed to off-site facilities used to store or manufacture materials and equipment to be incorporated into the Work and shall respond to any other reasonable request to further the inspector's ability to observe or complete any tests. Such inspections shall not relieve the General Contractor of any of its quality control responsibilities or any other obligations under the Contract. All inspections and all tests conducted by the City are for the convenience and benefit of the City. These inspections and tests do not constitute acceptance of the materials or Work tested or inspected, and the City may reject or accept any Work or materials at any time prior to the inspections pursuant to G.C. 2002, whether or not previous inspections or tests were conducted by the inspector or a City representative.

.2 Building Inspection will perform building code compliance inspections for structures designed for human occupancy. It is the General Contractor’s responsibility to schedule and obtain these inspections. If a code compliance inspection results in identification of a condition which will be at variance to the Contract Documents, the General Contractor shall immediately notify the Project Manager and confirm such notification with formal correspondence no later than forty-eight (48) hours after the occurrence.

.3 When any unit of government or political subdivision, utility or Railroad Corporation is to pay a portion of the cost of the Work, its respective representatives shall have the right to inspect the Work. This inspection shall not make any unit of government or political subdivision, utility or Railroad Corporation a party to the Contract, and shall not interfere with the rights of either party.

SC-12 DISPOSAL OF NON-HAZARDOUS WASTE AT DADS

In accordance with the Landfill Agreement made between the City and Waste Management of Colorado, Inc., bidders will be required to haul dedicated loads (non-hazardous entire loads of waste) to the Denver-Arapahoe Disposal Site (“DADS”) for disposal. DADS is located at Highway 30 and Hampden Avenue in Arapahoe County, Colorado. The City will pay all fees associated with such disposal but the bidder shall be responsible for the costs of transporting the loads. Non-hazardous waste is defined as those substances and materials not defined or classified as hazardous by the Colorado Hazardous Waste Commission pursuant to C.R.S. §25-15-101(6), as amended from time to time, and includes construction debris, soil and asbestos. Bidders shall not use Gun Club Road between I-70 and Mississippi Avenue as a means of access to DADS.

SC-13 PROHIBITION ON USE OF CCA-TREATED WOOD PRODUCTS

The use of any wood products pressure-treated with chromated copper arsenate (CCA) is prohibited. Examples of CCA-treated wood products include wood used in play structures, decks, picnic tables, landscaping timbers, fencing, patios, walkways and boardwalks.

SC-14 WAIVER OF: PART 8 OF ARTICLE 20 OF TITLE 13, COLORADO REVISED STATUTES.

The Contractor specifically waives all the provisions of Part 8 of Article 20 of Title 13, Colorado Revised Statutes regarding defects in the Work under this Construction Contract.

SC-15 ATTORNEY'S FEES

Colorado Revised Statute 38-26-107 requires that in the event any person or company files a verified statement of amounts due and unpaid in connection with a claim for labor and materials supplied on this project, the City shall withhold from payments to the Contractor sufficient funds to insure the payment of any such claims. Should the City and County of Denver be made a party to any lawsuit to enforce such unpaid claims or any lawsuit arising out of or relating to such withheld funds, the Contractor agrees to pay to the City its costs and a reasonable attorney's fee which cost shall be included as a Cost of the Work.

Because the City Attorney Staff does not bill the City for legal services on an hourly basis, the Contractor agrees a reasonable fee shall be computed at the rate of one hundred dollars per hour of City Attorney time.

SC-16 INSURANCE

General Condition 1601 is hereby deleted in its entirety and replaced with the following:

(1) General Conditions: Contractor agrees to secure, at or before the time of execution of this Agreement, the following insurance covering all operations, goods or services provided pursuant to this Agreement. Contractor shall keep the required insurance coverage in force at all times during the term of the Agreement, or any extension thereof, during any warranty period, and for eight (8) years after termination of the Agreement. The required insurance shall be underwritten by an insurer licensed or authorized to do business in Colorado and rated by A.M. Best Company as "A-"VIII or better. Each policy shall contain a valid provision or endorsement requiring notification to the City in the event any of the required policies be canceled or non-renewed before the expiration date thereof. Such written notice shall be sent to the parties identified in the Notices section of this Agreement. Such notice shall reference the City contract number listed on the signature page of this Agreement. Said notice shall be sent thirty (30) days prior to such cancellation or non-renewal unless due to non-payment of premiums for which notice shall be sent ten (10) days prior. If such written notice is unavailable from the insurer, contractor shall provide written notice of cancellation, non-renewal and any reduction in coverage to the parties identified in the Notices section by certified mail, return receipt requested within three (3) business days of such notice by its insurer(s) and referencing the City's contract number. If any policy is in excess of a deductible or self-insured retention, the City must be notified by the Contractor. Contractor shall be responsible for the payment of any deductible or self-insured retention. The insurance coverages specified in this Agreement are the minimum requirements, and these requirements do not lessen or limit the liability of the Contractor. The Contractor shall maintain, at its own expense, any additional kinds or amounts of insurance that it may deem necessary to cover its obligations and liabilities under this Agreement.

(2) Proof of Insurance: Contractor shall provide a copy of this Agreement to its insurance agent or broker. Contractor may not commence services or work relating to the Agreement prior to placement of coverage. Contractor certifies that the certificate of insurance attached as part of the Contract Documents, preferably an ACORD certificate, complies with all insurance requirements of this Agreement. The City requests that the City's contract number be referenced on the Certificate. The City's acceptance of a certificate of insurance or other proof of insurance that does not comply with all insurance requirements set forth in this Agreement shall not act as a waiver of Contractor's breach of this Agreement or of any of the City's rights or remedies under this Agreement. The City's Risk Management Office may require additional proof of insurance, including but not limited to policies and endorsements.

(3) Additional Insureds: For Commercial General Liability and Auto Liability, Contractor and subcontractor's insurer(s) shall name the City and County of Denver, its elected and appointed officials, employees and volunteers as additional insured.

(4) Waiver of Subrogation: For all coverages, Contractor's insurer shall waive subrogation rights against the City.

(5) Subcontractors and Subconsultants: All subcontractors and subconsultants (including independent contractors, suppliers or other entities providing goods or services required by this Agreement) shall be subject to all of the requirements herein and shall procure and maintain the same coverages required of the Contractor. Contractor shall include all such subcontractors as additional insured under its policies (with the exception of Workers' Compensation) or shall ensure that all such subcontractors and subconsultants maintain the required coverages. Contractor agrees to provide proof of insurance for all such subcontractors and subconsultants upon request by the City.

(6) Workers' Compensation/Employer's Liability Insurance: Contractor shall maintain the coverage as required by statute for each work location and shall maintain Employer's Liability insurance with limits of

$100,000 per occurrence for each bodily injury claim, $100,000 per occurrence for each bodily injury caused by disease claim, and $500,000 aggregate for all bodily injuries caused by disease claims. Contractor expressly represents to the City, as a material representation upon which the City is relying in entering into this Agreement, that none of the Contractor's officers or employees who may be eligible under any statute or law to reject Workers' Compensation Insurance shall effect such rejection during any part of the term of this Agreement, and that any such rejections previously effected, have been revoked as of the date Contractor executes this Agreement.

(7) **Commercial General Liability:** Contractor shall maintain a Commercial General Liability insurance policy with limits of $1,000,000 for each occurrence, $1,000,000 for each personal and advertising injury claim, $2,000,000 products and completed operations aggregate, and $2,000,000 policy aggregate.

(8) **Business Automobile Liability:** Contractor shall maintain Business Automobile Liability with limits of $1,000,000 combined single limit applicable to all owned, hired and non-owned vehicles used in performing services under this Agreement.

(9) **Builder's Risk or Installation Floater:** Contractor shall maintain limits equal to the completed value of the project. Coverage shall be written on an all risk, replacement cost basis including coverage for soft costs, flood and earth movement, if in a flood or quake zone, and, if applicable, equipment breakdown including testing. The City and County of Denver, Contractor, and subcontractors shall be Additional Named Insureds under the policy. Policy shall remain in force until acceptance of the project by the City.

(10) **Contractors Pollution Liability:** Contractor shall maintain limits of $1,000,000 per occurrence and $2,000,000 policy aggregate. Policy to include bodily injury; property damage including loss of use of damaged property; defense costs including costs and expenses incurred in the investigation, defense or settlement of claims; and clean-up costs. Policy shall include a severability of interest or separation of insured provision (no insured vs. insured exclusion) and a provision that coverage is primary and non-contributory with any other coverage or self-insurance maintained by the City.

(11) **Additional Provisions:**

(a) For Commercial General Liability, the policies must provide the following:

(i) That this Agreement is an Insured Contract under the policy;
(ii) Defense costs in excess of policy limits;
(iii) A severability of interests or separation of insureds provision (no insured vs. insured exclusion); and
(iv) A provision that coverage is primary and non-contributory with other coverage or self-insurance maintained by the City.

(b) For claims-made coverage:
(i) The retroactive date must be on or before the contract date or the first date when any goods or services were provided to the City, whichever is earlier

(c) Contractor shall advise the City in the event any general aggregate or other aggregate limits are reduced below the required per occurrence limits. At their own expense, and where such general aggregate or other aggregate limits have been reduced below the required per occurrence limit, the Contractor will procure such per occurrence limits and furnish a new certificate of insurance showing such coverage is in force.

SC-17 GREENPRINT DENVER REQUIREMENTS

In accordance with the City and County of Denver Executive Order 123: Greenprint Denver Office and Sustainability Policy, as amended, Contractor shall adhere to sections of Executive Order 123 pertinent to the construction of the built environment. This includes but is not limited to: all construction and renovation of buildings shall follow instructions and memorandum for high performance buildings; horizontal projects shall include the use of fly ash concrete and recycled aggregate where possible; and, all projects shall recycle construction and demolition waste, and install materials that contain recycled content whenever possible using the U.S. Green Building Council Leadership in Energy and Environmental Design (LEED) as guidance. Non-hazardous solid waste that is eligible for reuse or recycling is not subject to the DADS disposal requirement defined in SC-12.

A completed "Greenprint Denver Closeout Form for Construction Projects" shall be delivered to the Project Manager as a submittal requirement of Final Acceptance.

http://www.denvergov.org/constructioncontracts/Home/ContractorResources/tabid/443154/Default.aspx

CITY AND COUNTY OF DENVER
DEPARTMENT OF PUBLIC WORKS

PERFORMANCE AND PAYMENT BOND

KNOW ALL MEN BY THESE PRESENTS, that we, the undersigned Iron Woman Construction & Environmental Services, LLC 5680 Emerson Street, Denver, CO 80216, a corporation organized and existing under and by virtue of the laws of the State of Colorado, hereafter referred to as the "Contractor", and Fidelity and Deposit Company of Maryland, a corporation organized and existing under and by virtue of the laws of the State of Illinois, and authorized to transact business in the State of Colorado, as Surety, are held and firmly bound unto the CITY AND COUNTY OF DENVER, a municipal corporation of the State of Colorado, hereinafter referred to as the "City", in the penal sum : **Four Million Eight Hundred Sixty-Two Thousand Eight Hundred Seventy-Three Dollars and Ninety-One Cents ($4,862,873.91)**, lawful money of the United States of America, for the payment of which sum, well and truly to be made, we bind ourselves and our heirs, executors, administrators, successors and assigns, jointly and severally, firmly by these presents;

THE CONDITION OF THE FOREGOING OBLIGATION IS SUCH THAT:

WHEREAS, the above bounden Contractor has entered into a written contract with the aforesaid City for furnishing all labor and tools, supplies, equipment, superintendence, materials and everything necessary for and required to do, perform and complete the construction of **CONTRACT NO. 201846567, RIVER NORTH PARK,** Denver, Colorado, and has bound itself to complete the project within the time or times specified or pay liquidated damages, all as designated, defined and described in the said Contract and Conditions thereof, and in accordance with the Plans and Technical Specifications therefore, a copy of said Contract being made a part hereof;

NOW, THEREFORE, if the said Contractor shall and will, in all particulars well and truly and faithfully observe, perform and abide by each and every Covenant, Condition and part of said Contract, and the Conditions, Technical Specifications, Plans, and other Contract Documents thereto attached, or by reference made a part thereof and any alterations in and additions thereto, according to the true intent and meaning in such case, then this obligation shall be and become null and void; otherwise, it shall remain in full force and effect;

PROVIDED FURTHER, that if the said Contractor shall satisfy all claims and demands incurred by the Contractor in the performance of said Contract, and shall fully indemnify and save harmless the City from all damages, claims, demands, expense and charge of every kind (including claims of patent infringement) arising from any act, omission, or neglect of said Contractor, its agents, or employees with relation to said work; and shall fully reimburse and repay to the City all costs, damages, and expenses which it may incur in making good any default based upon the failure of the Contractor to fulfill its obligation to furnish maintenance, repairs or replacements for the full guarantee period provided in the Contract Documents, then this obligation shall be null and void; otherwise it shall remain in full force and effect;

PROVIDED FURTHER, that if said Contractor shall at all times promptly make payments of all amounts lawfully due to all persons supplying or furnishing it or its subcontractors with labor and materials, rental machinery, tools or equipment used or performed in the prosecution of work provided for in the above Contract and that if the Contractor will indemnify and save harmless the City for the extent of any and all payments in connection with the carrying out of such Contract, then this obligation shall be null and void; otherwise it shall remain in full force and effect;

PROVIDED FURTHER, that if the said Contractor fails to duly pay for any labor, materials, team hire, sustenance, provisions, provender, gasoline, lubricating oils, fuel oils, grease, coal, or any other supplies or materials used or consumed by said Contractor or its subcontractors in performance of the work contracted to be done, or fails to pay any person who supplies rental machinery, tools or equipment, all amounts due as the result of the use of such machinery, tools or equipment in the prosecution of the work, the Surety will pay the same in any amount not exceeding the amount of this obligation, together with interest as provided by law;

PROVIDED FURTHER, that the said Surety, for value received, hereby stipulates and agrees that no change, extension of time, alteration or addition to the terms of the Contract, or to contracts with others in connection with this project, or the work to be performed thereunder, or the Technical Specifications and Plans accompanying the same, shall in any way affect its obligation on this bond and it does hereby waive notice of any change, extension of time, alteration or addition to the terms of the Contract, or contracts, or to the work, or to the Technical Specifications and Plans.

IN WITNESS WHEREOF, said Contractor and said Surety have executed these presents as of this 4th day of March, 2019

Attest:

Secretary

Iron Woman Construction & Environmental Services, LLC
Contractor

By:

President Shaun S. Egan, President & CEO

Fidelity and Deposit Company of Maryland
Surety

By:

Attorney-In-Fact Darlene Krings

(Accompany this bond with Attorney-in-Fact's authority from the Surety to execute bond, certified to include the date of the bond).

APPROVED AS TO FORM:
Attorney for the City and County of Denver

By:

Assistant City Attorney

APPROVED FOR THE CITY AND COUNTY OF DENVER

By:

MAYOR

By:

MANAGER OF PUBLIC WORKS

ZURICH AMERICAN INSURANCE COMPANY
COLONIAL AMERICAN CASUALTY AND SURETY COMPANY
FIDELITY AND DEPOSIT COMPANY OF MARYLAND
POWER OF ATTORNEY

KNOW ALL MEN BY THESE PRESENTS: That the ZURICH AMERICAN INSURANCE COMPANY, a corporation of the State of New York, the COLONIAL AMERICAN CASUALTY AND SURETY COMPANY, a corporation of the State of Maryland, and the FIDELITY AND DEPOSIT COMPANY OF MARYLAND a corporation of the State of Maryland (herein collectively called the "Companies"), by **DAVID MCVICKER, Vice President,** in pursuance of authority granted by Article V, Section 8, of the By-Laws of said Companies, which are set forth on the reverse side hereof and are hereby certified to be in full force and effect on the date hereof, do hereby nominate, constitute, and appoint **Russell D. LEAR, Kristen PEREIRO, Dulce R. HUGGINS, Darlene KRINGS, K'Anne E. VOGEL, Kelly T. URWILLER, Royal R. LOVELL, Wesley J. BUTORAC and Steve J. BLOHM, all of GREELEY, Colorado, EACH** its true and lawful agent and Attorney-in-Fact, to make, execute, seal and deliver, for, and on its behalf as surety, and as its act and deed: **any and all bonds and undertakings,** and the execution of such bonds or undertakings in pursuance of these presents, shall be as binding upon said Companies, as fully and amply, to all intents and purposes, as if they had been duly executed and acknowledged by the regularly elected officers of the ZURICH AMERICAN INSURANCE COMPANY at its office in New York, New York., the regularly elected officers of the COLONIAL AMERICAN CASUALTY AND SURETY COMPANY at its office in Owings Mills, Maryland., and the regularly elected officers of the FIDELITY AND DEPOSIT COMPANY OF MARYLAND at its office in Owings Mills, Maryland., in their own proper persons.

The said Vice President does hereby certify that the extract set forth on the reverse side hereof is a true copy of Article V, Section 8, of the By-Laws of said Companies, and is now in force.

IN WITNESS WHEREOF, the said Vice-President has hereunto subscribed his/her names and affixed the Corporate Seals of the said **ZURICH AMERICAN INSURANCE COMPANY, COLONIAL AMERICAN CASUALTY AND SURETY COMPANY, and FIDELITY AND DEPOSIT COMPANY OF MARYLAND**, this 31st day of January, A.D. 2018.

ATTEST:

ZURICH AMERICAN INSURANCE COMPANY
COLONIAL AMERICAN CASUALTY AND SURETY COMPANY
FIDELITY AND DEPOSIT COMPANY OF MARYLAND

By: _____
Assistant Secretary
Dawn E. Brown

_____
Vice President
David McVicker

State of Maryland
County of Baltimore

On this 31st day of January, A.D. 2018, before the subscriber, a Notary Public of the State of Maryland, duly commissioned and qualified, **DAVID MCVICKER, Vice President, and DAWN E. BROWN, Assistant Secretary,** of the Companies, to me personally known to be the individuals and officers described in and who executed the preceding instrument, and acknowledged the execution of same, and being by me duly sworn, deposeth and saith, that he/she is the said officer of the Company aforesaid, and that the seals affixed to the preceding instrument are the Corporate Seals of said Companies, and that the said Corporate Seals and the signature as such officer were duly affixed and subscribed to the said instrument by the authority and direction of the said Corporations.

IN TESTIMONY WHEREOF, I have hereunto set my hand and affixed my Official Seal the day and year first above written.

_____
Constance A. Dunn, Notary Public
My Commission Expires: July 9, 2019

POA-F 020-5340A

EXTRACT FROM BY-LAWS OF THE COMPANIES

"Article V, Section 8, Attorneys-in-Fact. The Chief Executive Officer, the President, or any Executive Vice President or Vice President may, by written instrument under the attested corporate seal, appoint attorneys-in-fact with authority to execute bonds, policies, recognizances, stipulations, undertakings, or other like instruments on behalf of the Company, and may authorize any officer or any such attorney-in-fact to affix the corporate seal thereto; and may with or without cause modify of revoke any such appointment or authority at any time."

CERTIFICATE

I, the undersigned, Vice President of the ZURICH AMERICAN INSURANCE COMPANY, the COLONIAL AMERICAN CASUALTY AND SURETY COMPANY, and the FIDELITY AND DEPOSIT COMPANY OF MARYLAND, do hereby certify that the foregoing Power of Attorney is still in full force and effect on the date of this certificate; and I do further certify that Article V, Section 8, of the By-Laws of the Companies is still in force.

This Power of Attorney and Certificate may be signed by facsimile under and by authority of the following resolution of the Board of Directors of the ZURICH AMERICAN INSURANCE COMPANY at a meeting duly called and held on the 15th day of December 1998.

RESOLVED: "That the signature of the President or a Vice President and the attesting signature of a Secretary or an Assistant Secretary and the Seal of the Company may be affixed by facsimile on any Power of Attorney...Any such Power or any certificate thereof bearing such facsimile signature and seal shall be valid and binding on the Company."

This Power of Attorney and Certificate may be signed by facsimile under and by authority of the following resolution of the Board of Directors of the COLONIAL AMERICAN CASUALTY AND SURETY COMPANY at a meeting duly called and held on the 5th day of May, 1994, and the following resolution of the Board of Directors of the FIDELITY AND DEPOSIT COMPANY OF MARYLAND at a meeting duly called and held on the 10th day of May, 1990.

RESOLVED: "That the facsimile or mechanically reproduced seal of the company and facsimile or mechanically reproduced signature of any Vice-President, Secretary, or Assistant Secretary of the Company, whether made heretofore or hereafter, wherever appearing upon a certified copy of any power of attorney issued by the Company, shall be valid and binding upon the Company with the same force and effect as though manually affixed.

IN TESTIMONY WHEREOF, I have hereunto subscribed my name and affixed the corporate seals of the said Companies, this ____ day of _____, 20____.

Michael Bond, Vice President

TO REPORT A CLAIM WITH REGARD TO A SURETY BOND, PLEASE SUBMIT ALL REQUIRED INFORMATION TO:

Zurich American Insurance Co.
Attn: Surety Claims
1299 Zurich Way
Schaumburg, IL 60196-1056

DENVER
THE MILE HIGH CITY

PERFORMANCE AND PAYMENT BOND
SURETY AUTHORIZATION
(SAMPLE)

FAX NUMBER: 720-913-3183
TELEPHONE NUMBER: 720-913-3267

Assistant City Attorney
201 W. Colfax Ave. Dept 1207
Denver, Colorado 80202

RE: Iron Woman Construction and Environmental Services, LLC

Contract No: 201846567
Project Name: River North Park
Contract Amount: $4,862,873.91
Performance and Payment Bond No.: 9277439

Dear Assistant City Attorney,

The Performance and Payment Bonds covering the above captioned project were executed by this agency, through Fidelity and Deposit Company of Maryland insurance company, on February 27, 2019.

We hereby authorize the City and County of Denver, Department of Public Works, to date all bonds and powers of attorney to coincide with the date of the contract.

If you should have any additional questions or concerns, please don't hesitate to give me a call at 970-266-7102.

Thank you.

Sincerely,

Darlene Krings
Attorney-in-Fact

Denver Public Works/Office of the Executive Director
201 West Colfax Avenue, Dept 608 | Denver, CO 80202
www.denvergov.org/dpw
p. 720.865.8630 | f. 720.865.8795

311 | POCKETGOV.COM | DENVERGOV.ORG | DENVER 8 TV

CERTIFICATE OF LIABILITY INSURANCE

DATE (MM/DD/YYYY): 02/26/2019

THIS CERTIFICATE IS ISSUED AS A MATTER OF INFORMATION ONLY AND CONFERS NO RIGHTS UPON THE CERTIFICATE HOLDER. THIS CERTIFICATE DOES NOT AFFIRMATIVELY OR NEGATIVELY AMEND, EXTEND OR ALTER THE COVERAGE AFFORDED BY THE POLICIES BELOW. THIS CERTIFICATE OF INSURANCE DOES NOT CONSTITUTE A CONTRACT BETWEEN THE ISSUING INSURER(S), AUTHORIZED REPRESENTATIVE OR PRODUCER, AND THE CERTIFICATE HOLDER.

IMPORTANT: If the certificate holder is an ADDITIONAL INSURED, the policy(ies) must have ADDITIONAL INSURED provisions or be endorsed. If SUBROGATION IS WAIVED, subject to the terms and conditions of the policy, certain policies may require an endorsement. A statement on this certificate does not confer rights to the certificate holder in lieu of such endorsement(s).

PRODUCER Flood and Peterson PO Box 578 Greeley CO 80632	**CONTACT NAME:** Melanie Lathouwers, CIC **PHONE (A/C, No, Ext):** (720) 977-6022 **FAX (A/C, No):** (720) 977-7113 **E-MAIL ADDRESS:** MLathouwers@floodpeterson.com
INSURED Iron Woman Construction & Environmental Services, LLC Integrating Technology & Standards, Inc. 5680 Emerson St Denver CO 80216	**INSURER(S) AFFORDING COVERAGE** — **NAIC #** **INSURER A:** Liberty Mututal Fire Insurance Company — 23035 **INSURER B:** Chaucer Reinsurance Company **INSURER C:** Zurich American Insurance Company — 16535 **INSURER D:** **INSURER E:** **INSURER F:**

COVERAGES **CERTIFICATE NUMBER:** 18/19 **REVISION NUMBER:**

THIS IS TO CERTIFY THAT THE POLICIES OF INSURANCE LISTED BELOW HAVE BEEN ISSUED TO THE INSURED NAMED ABOVE FOR THE POLICY PERIOD INDICATED. NOTWITHSTANDING ANY REQUIREMENT, TERM OR CONDITION OF ANY CONTRACT OR OTHER DOCUMENT WITH RESPECT TO WHICH THIS CERTIFICATE MAY BE ISSUED OR MAY PERTAIN, THE INSURANCE AFFORDED BY THE POLICIES DESCRIBED HEREIN IS SUBJECT TO ALL THE TERMS, EXCLUSIONS AND CONDITIONS OF SUCH POLICIES. LIMITS SHOWN MAY HAVE BEEN REDUCED BY PAID CLAIMS.

INSR LTR	TYPE OF INSURANCE	ADDL INSD	SUBR WVD	POLICY NUMBER	POLICY EFF (MM/DD/YYYY)	POLICY EXP (MM/DD/YYYY)	LIMITS	
A	[X] COMMERCIAL GENERAL LIABILITY [ ] CLAIMS-MADE [X] OCCUR GEN'L AGGREGATE LIMIT APPLIES PER: [ ] POLICY [X] PRO-JECT [ ] LOC [ ] OTHER:	Y		TB2-Z51-292317-028	10/01/2018	10/01/2019	EACH OCCURRENCE DAMAGE TO RENTED PREMISES (Ea occurrence) MED EXP (Any one person) PERSONAL & ADV INJURY GENERAL AGGREGATE PRODUCTS - COMP/OP AGG $	$ 1,000,000 $ 100,000 $ 5,000 $ 1,000,000 $ 2,000,000 $ 2,000,000 $
A	AUTOMOBILE LIABILITY [X] ANY AUTO [ ] OWNED AUTOS ONLY [ ] SCHEDULED AUTOS [ ] HIRED AUTOS ONLY [ ] NON-OWNED AUTOS ONLY	Y		AS2-Z51-292317-018	10/01/2018	10/01/2019	COMBINED SINGLE LIMIT (Ea accident) BODILY INJURY (Per person) BODILY INJURY (Per accident) PROPERTY DAMAGE (Per accident) $	$ 1,000,000 $ $ $ $
B	[ ] UMBRELLA LIAB [X] OCCUR [X] EXCESS LIAB [ ] CLAIMS-MADE [ ] DED [ ] RETENTION $	Y		B1333ECB180	10/01/2018	10/01/2019	EACH OCCURRENCE AGGREGATE $	$ 5,000,000 $ 5,000,000 $
A	WORKERS COMPENSATION AND EMPLOYERS' LIABILITY ANY PROPRIETOR/PARTNER/EXECUTIVE OFFICER/MEMBER EXCLUDED? (Mandatory in NH) Y/N: N If yes, describe under DESCRIPTION OF OPERATIONS below	N/A		WA2-Z5D-292317-038	10/01/2018	10/01/2019	[X] PER STATUTE [ ] OTH-ER E.L. EACH ACCIDENT E.L. DISEASE - EA EMPLOYEE E.L. DISEASE - POLICY LIMIT	 $ 1,000,000 $ 1,000,000 $ 1,000,000
C	Leased/Rented Equipment			CPP-6016562-00	10/01/2018	10/01/2019	$1,000,000 Limit Cargo Policy # TB2Z51292317028	$5,000 Ded. $25,000 Limit $1,000 Ded.

DESCRIPTION OF OPERATIONS / LOCATIONS / VEHICLES (ACORD 101, Additional Remarks Schedule, may be attached if more space is required)

RE: River North Park
Project #: 201846567
City and County of Denver, its Elected and Appointed Officials, Employees and volunteers are included as Additional Insured as required by written contract with respects to liability arising out of work performed by the named insured.

CERTIFICATE HOLDER

City and County of Denver Depsrtment of Public Works
201 W. Colfax Ave. Dept 608
Denver CO 80202-0000

CANCELLATION

SHOULD ANY OF THE ABOVE DESCRIBED POLICIES BE CANCELLED BEFORE THE EXPIRATION DATE THEREOF, NOTICE WILL BE DELIVERED IN ACCORDANCE WITH THE POLICY PROVISIONS.

AUTHORIZED REPRESENTATIVE

Melanie Lathouwers

© 1988-2015 ACORD CORPORATION. All rights reserved.

The ACORD name and logo are registered marks of ACORD

NOTICE OF APPARENT LOW BIDDER
(SAMPLE)

Current Date

To:

Gentlemen:

The MANAGER OF PUBLIC WORKS has considered the Bids submitted on January 24, 2019 for work to be done and materials to be furnished in and for:

CONTRACT NO. 201846567, RIVER NORTH PARK

as set forth in detail in the Contract Documents for the City and County of Denver, Colorado. It appears that your Bid is fair, equitable, and to the best interest of the City and County; therefore, said Bid is hereby accepted at the bid price contained herein, subject to execution of the Contract Documents and your furnishing the items specified below, the total cost thereof (Contract Amount Written), (Contract Amount Numeric).

It will be necessary for you to appear forthwith at the office of the Department of Public Works, Finance and Administration, 201 W. Colfax Ave. Dept 614, Denver, Colorado 80202, to receive the said Contract Documents, execute the same and return them to the Department of Public Works, Finance and Administration, within the time limit set forth in the Bid Proposal.

In accordance with the requirements set forth in the Contract Documents, you are required to furnish the following documents:

a. Insurance Certificates: General Liability and Automotive Liability, Workman's Compensation and Employer Liability; or any other coverage required by the contract; and
b. One original plus four copies of the Power of Attorney relative to Performance and/or Payment Bond;

All construction Contracts made and entered into by the City and County of Denver are subject to Affirmative Action and Equal Opportunity Rules and Regulations, as adopted by the Manager of Public Works, and each contract requiring payment by the City of one-half million dollars ($500,000.00) or more shall first be approved by the City Council acting by ordinance and in accordance with Section 3.2.6 of the Charter of the City and County of Denver.

Prior to issuance of Notice to Proceed, all Equal Opportunity requirements must be completed. Additional information may be obtained by contacting the Director of Contract Compliance at (720-913-1700).

NOTICE OF APPARENT LOW BIDDER
(SAMPLE)

CONTRACT NO. 201846567
Page 2

The Bid Security submitted with your Bid, will be returned upon execution of the Contract and furnishing of the Performance Bond. In the event you should fail to execute the Contract and to furnish the performance Bond within the time limit specified, said Bid Security will be retained by the City and County of Denver as liquidated damages, and not as a penalty for the delay and extra work caused thereby.

Dated at Denver, Colorado this _____ day of _____20___.

CITY AND COUNTY OF DENVER

By _____
Manager of Public Works

Denver Public Works/Office of the Executive Director
201 West Colfax Avenue, Dept 608 | Denver, CO 80202
www.denvergov.org/dpw
p. 720.865.8630 | f. 720.865.8795

311 | POCKETGOV.COM | DENVERGOV.ORG | DENVER 8 TV

Current Date

NOTICE TO PROCEED
(SAMPLE)

Name
Company
Street
City/State/Zip

CONTRACT NO. 201846567, RIVER NORTH PARK

In accordance with General Contract Condition 302 of the Standard Specifications for Construction, General Contract Conditions, 2011 Edition, you are hereby authorized and directed to proceed on _____ with the work of constructing contract number 201846567, as set forth in detail in the contract documents for the City and County of Denver.

With a contract time of _____ calendar days, the project must be complete on or before _____.

If you have not already done so, you must submit your construction schedule, in accordance with General Contract Condition 306.2.B, to the Project Manager within 10 days. Additionally, you must submit your tax exempt certificate, and copies of your subcontractors' certificates, in accordance with General Contract Condition 323.5, to the Project Manager as soon as possible. Failure to submit these certificates will delay processing of payment applications.

Sincerely,

Lesley B. Thomas
City Engineer

cc:

Denver Public Works/Office of the Executive Director
201 West Colfax Avenue, Dept 608 | Denver, CO 80202
www.denvergov.org/dpw
p. 720.865.8630 | f. 720.865.8795

311 | POCKETGOV.COM | DENVERGOV.ORG | DENVER 8 TV

Certificate of Contract Release
(SAMPLE)

Date

Name
Company
Street
City/State/Zip

RE: Certificate of Contract Release for
201846567, RIVER NORTH PARK

Received this date of the City and County of Denver, as full and final payment of the cost of the improvements provided for in the foregoing contract, _____ dollars and _____ cents ($_____), in cash, being the remainder of the full amount accruing to the undersigned by virtue of said contract; said cash also covering and including full payment for the cost of all extra work and material furnished by the undersigned in the construction of said improvements, and all incidentals thereto, and the undersigned hereby releases said City and County of Denver from any and all claims or demands whatsoever, regardless of how denominated, growing out of said contract.

And these presents are to certify that all persons performing work upon or furnishing materials for said improvements under the foregoing contract have been paid in full and this payment to be made is the last or final payment.

_____

Contractor's Signature Date Signed

If there are any questions, please contact me by telephone at (720) 913-XXXX. Please return this document via facsimile at (720) 913-1805 and mail to original to the above address.

Denver Public Works/Office of the Executive Director
201 West Colfax Avenue, Dept 608 | Denver, CO 80202
www.denvergov.org/dpw
p. 720.865.8630 | f. 720.865.8795

311 | POCKETGOV.COM | DENVERGOV.ORG | DENVER 8 TV

CITY AND COUNTY OF DENVER

STATE OF COLORADO

DENVER
THE MILE HIGH CITY

DEPARTMENT OF PUBLIC WORKS

Prevailing Wage Rates

Contract Number: 201846567

River North Park

December 28, 2018

DENVER
THE MILE HIGH CITY

Office of Human Resources

201 W. Colfax, Department 412
Denver, CO 80202
p: 720.913.5751
f: 720.913.5720
www.denvergov.org/humanresources

TO: All Users of the City of Denver Prevailing Wage Schedules

FROM: Susan Keller, Human Resources Technician, Classification & Compensation

DATE: Monday, October 15, 2018

SUBJECT: Latest Change to Prevailing Wage Schedules

Please be advised, prevailing wage rates for some building, heavy, highway, and residential construction trades have not been updated by the United States Department of Labor (DOL) since March 1, 2002. The Career Service Board, in their meeting held on April 21, 2011, approved the use of the attached supplemental wage rates until prevailing wage rates for these classifications of work are again published by the United States Department of Labor in accordance with the Davis-Bacon Act.

The effective date for this publication will be **Friday, October 1 , 01** and applies to the City and County of Denver for **HEAV CONSTRUCTION PRO ECTS** in accordance with the Denver Revised Municipal Code, Section 20-76(c).

General Wage Decision No. CO180012
Superseded General Decision No. CO20170012
Modification No. 8
Publication Date: 10/12/2018
(6 pages)

Unless otherwise specified in this document, apprentices shall be permitted only if they are employed pursuant to, and individually registered in, a bona fide apprenticeship program registered with the U.S. Department of Labor (DOL). The employer and the individual apprentice must be registered in a program, which has received prior approval, by the DOL. Any employer, who employs an apprentice and is found to be in violation of this provision, shall be required to pay said apprentice the full journeyman scale.

Attachments as listed above.

General Decision Number: CO180012 10/12/2018 CO12

Superseded General Decision Number: CO20170012

State: Colorado

Construction Type: Heavy

Counties: Adams, Arapahoe, Boulder, Broomfield, Denver, Douglas, El Paso, Jefferson, Larimer, Mesa, Pueblo and Weld Counties in Colorado.

HEAVY CONSTRUCTION PROJECTS

Note: Under Executive Order (EO) 13658, an hourly minimum wage of $10.35 for calendar year 2018 applies to all contracts subject to the Davis-Bacon Act for which the contract is awarded (and any solicitation was issued) on or after January 1, 2015. If this contract is covered by the EO, the contractor must pay all workers in any classification listed on this wage determination at least $10.35 per hour (or the applicable wage rate listed on this wage determination, if it is higher) for all hours spent performing on the contract in calendar year 2018. The EO minimum wage rate will be adjusted annually. Please note that this EO applies to the above-mentioned types of contracts entered into by the federal government that are subject to the Davis-Bacon Act itself, but it does not apply to contracts subject only to the Davis-Bacon Related Acts, including those set forth at 29 CFR 5.1(a)(2)-(60). Additional information on contractor requirements and worker protections under the EO is available at www.dol.gov/whd/govcontracts.

Modification Number	Publication Date
0	01/05/2018
1	01/12/2018
2	02/02/2018
3	02/09/2018
4	03/02/2018
5	07/13/2018
6	08/03/2018
7	08/31/2018
8	10/12/2018

ASBE0028-001 07/01/2018

	Rates	Fringes
Asbestos Workers/Insulator (Includes application of all insulating materials, protective coverings, coatings and finishings to all types of mechanical systems)	$ 31.73	14.23

BRCO0007-004 01/01/2018

ADAMS, ARAPAHOE, BOULDER, BROOMFIELD, DENVER, DOUGLAS, JEFFERSON AND WELD COUNTIES

	Rates	Fringes
BRICKLAYER	$ 27.98	10.04

BRCO0007-006 05/01/2018

EL PASO AND PUEBLO COUNTIES

	Rates	Fringes
BRICKLAYER	$ 25.88	10.34

* ELEC0012-004 09/01/2018

PUEBLO COUNTY

	Rates	Fringes
ELECTRICIAN		
Electrical contract over $1,000,000	$ 27.70	12.30+3%
Electrical contract under $1,000,000	$ 24.85	12.30+3%

ELEC0068-001 06/01/2018

ADAMS, ARAPAHOE, BOULDER, BROOMFIELD, DENVER, DOUGLAS, JEFFERSON, LARIMER, AND WELD COUNTIES

	Rates	Fringes
ELECTRICIAN	$ 35.80	15.45

ELEC0111-001 09/01/2017

	Rates	Fringes
Line Construction:		
Groundman	$ 25.68	25.25%+$5.75
Line Equipment Operator	$ 31.35	25.25% + $5.75
Lineman and Welder	$ 44.92	25.25%+$5.75

ELEC0113-002 06/01/2018

EL PASO COUNTY

	Rates	Fringes
ELECTRICIAN	$ 31.80	15.90

ELEC0969-002 06/01/2015

MESA COUNTY

	Rates	Fringes
ELECTRICIAN	$ 24.00	7.92

ENGI0009-001 05/01/2017

	Rates	Fringes

Power equipment operators:

Blade: Finish	$ 27.92	10.10
Blade: Rough	$ 27.60	10.10
Bulldozer	$ 27.60	10.10
Cranes: 50 tons and under	$ 27.75	10.10
Cranes: 51 to 90 tons	$ 27.92	10.10
Cranes: 91 to 140 tons	$ 28.55	10.10
Cranes: 141 tons and over	$ 29.82	10.10
Forklift	$ 27.22	10.10
Mechanic	$ 28.08	10.10
Oiler	$ 26.84	10.10
Scraper: Single bowl under 40 cubic yards	$ 27.75	10.10
Scraper: Single bowl, including pups 40 cubic yards and over and tandem bowls	$ 27.92	10.10
Trackhoe	$ 27.75	10.10

IRON0024-003 06/01/2018

	Rates	Fringes
Ironworkers: Structural	$ 27.45	22.11

LABO0086-001 05/01/2009

	Rates	Fringes
Laborers:		
Pipelayer	$ 18.68	6.78

PLUM0003-005 06/01/2017

ADAMS, ARAPAHOE, BOULDER, BROOMFIELD, DENVER, DOUGLAS, JEFFERSON, LARIMER AND WELD COUNTIES

	Rates	Fringes
PLUMBER	$ 39.08	16.44

---

* PLUM0058-002 07/01/2018

EL PASO COUNTY

	Rates	Fringes
Plumbers and Pipefitters	$ 32.75	14.85

---

* PLUM0058-008 07/01/2018

PUEBLO COUNTY

	Rates	Fringes
Plumbers and Pipefitters	$ 32.75	14.85

PLUM0145-002 07/01/2016

MESA COUNTY

	Rates	Fringes
Plumbers and Pipefitters	$ 35.17	11.70

PLUM0208-004 06/01/2016

ADAMS, ARAPAHOE, BOULDER, BROOMFIELD, DENVER, DOUGLAS, JEFFERSON, LARIMER AND WELD COUNTIES

	Rates	Fringes
PIPEFITTER	$ 37.10	16.62

SHEE0009-002 07/01/2018

	Rates	Fringes
Sheet metal worker	$ 34.02	17.49

TEAM0455-002 07/01/2018

	Rates	Fringes
Truck drivers:		
Pickup	$ 21.41	4.32
Tandem/Semi and Water	$ 22.04	4.32

SUCO2001-006 12/20/2001

	Rates	Fringes
BOILERMAKER	$ 17.60	
Carpenters:		
Form Building and Setting	$ 16.97	2.74
All Other Work	$ 15.14	3.37
Cement Mason/Concrete Finisher	$ 17.31	2.85
IRONWORKER, REINFORCING	$ 18.83	3.90
Laborers:		
Common	$ 11.22	2.92
Flagger	$ 8.91	3.80
Landscape	$ 12.56	3.21
Painters:		
Brush, Roller & Spray	$ 15.81	3.26
Power equipment operators:		
Backhoe	$ 16.36	2.48
Front End Loader	$ 17.24	3.23
Skid Loader	$ 15.37	4.41

WELDERS - Receive rate prescribed for craft performing operation to which welding is incidental.

Office of Human Resources
Supplemental rates
Specific to the Denver Projects
Supp , Date: 0 -03- 01

Classification		ase	Fringe
Ironworker	Ornamental	$24.80	$10.03
Laborer	Group 1	$18.18	$8.27
	Group 2	$21.59	$8.61
Laborer (Janitor)	Janitor/Yardmen	$17.68	$8.22
Laborer (Asbestos)	Removal of Asbestos	$21.03	$8.55
Laborer (Tunnel)	Group 1	$18.53	$8.30
	Group 2	$18.63	$8.31
	Group 3	$19.73	$8.42
	Group 4	$21.59	$8.61
	Group 5	$19.68	$8.42
Line Construction	Lineman, Gas Fitter/Welder	$36.88	$9.55
	Line Eq Operator/Line Truck Crew	$25.74	$8.09
Millwright		$28.00	$10.00
Power Equipment Operator	Group 1	$22.97	$10.60
	Group 2	$23.32	$10.63
	Group 3	$23.67	$10.67
	Group 4	$23.82	$10.68
	Group 5	$23.97	$10.70
	Group 6	$24.12	$10.71
	Group 7	$24.88	$10.79
Power Equipment Operator (Tunnels above and below ground, shafts and raises):	Group 1	$25.12	$10.81
	Group 2	$25.47	$10.85
	Group 3	$25.57	$10.86
	Group 4	$25.82	$10.88
	Group 5	$25.97	$10.90
	Group 6	$26.12	$10.91
	Group 7	$26.37	$10.94
Truck Driver	Group 1	$18.42	$10.00
	Group 2	$19.14	$10.07
	Group 3	$19.48	$10.11
	Group 4	$20.01	$10.16
	Group 5	$20.66	$10.23
	Group 6	$21.46	$10.31

Go to http://www.denvergov.org/Auditor to view the Prevailing Wage Clarification Document for a list of complete classifications used.

CITY AND COUNTY OF DENVER

STATE OF COLORADO

DENVER
THE MILE HIGH CITY

DEPARTMENT OF PUBLIC WORKS

Addenda

Contract Number: 201846567

River North Park

December 28, 2018

CITY AND COUNTY OF DENVER
DEPARTMENT OF PUBLIC WORKS

CONTRACT NO.: 201846567
PROJECT NAME: River North Park

ADDENDUM NO. 1 TO CONTRACT DOCUMENTS

Bidders are hereby instructed that the drawings, specifications, and other contract documents are modified, corrected, supplemented and/or superseded for the above-mentioned project as hereinafter described in the following attachments:

POSTPONEMENT OF BID OPENING

Notice is hereby given that the Sealed Bid Opening for **Contract No. 201846567, River North Park**, is hereby **postponed.** Sealed bids will be received in Room 6.G.7, 201 W. Colfax Ave., Denver, CO 80202 no later than:

11:00 a.m., Local Time
February 7, 2019

Published in the Daily Journal: January 29, 30, 31, 2019

This **ADDENDUM** shall be attached to, become a part of, and be returned with the Bid Proposal.

Lesley B. Thomas
City Engineer

1-25-19
Date

The undersigned bidder acknowledges receipt of this Addendum. The Proposal submitted herewith is in accordance with the stipulations set forth herein.

Contractor

ADDENDUM NO. 1

Date

CITY AND COUNTY OF DENVER
DEPARTMENT OF PUBLIC WORKS

CONTRACT NO.: 201846567
PROJECT NAME: River North Park

ADDENDUM NO. 2 TO CONTRACT DOCUMENTS

Bidders are hereby instructed that the drawings, specifications, and other contract documents are modified, corrected, supplemented and/or superseded for the above-mentioned project as hereinafter described in the following attachments:

Construction Plan Set—Schedule B (River North Park Park)

Please remove construction plan set pages IR1 through IR10 and replace them with the attached plan set, pages IR1 through IR11.

Bid Form:

Please remove bid form page numbers 6.18 and 6.19 and replace with attached bid form page numbers 6.18 (Add.#2) and 6.19 (Add.#2).

Questions and Answers:

Q1: Sheet C6.2; shows 5.8 LF of 6" PVC; there is no 6" PVC on the bid docs. Can you please advise where 6" PVC be accounted for in the bid docs.
A1: A new bid line will be added to the bid form for 5.8 LF of 6" PVC. (See new bid form number 331416-12 on page 6.19).

Q2: Sheet C6.2; the plans call out 8" DIP, the bid docs show 8" PVC. Which material is required for the 8" line shown on sheet C6.2 PVC or DIP? Please advise.
A2: The 8" line is DIP; and quantity should be 587 LF not 531 LF. (See revised bid form number 331416-3 on page 6.18).

Q3: Sheet C5.3; can you please clarify if the 8" Storm Pipe is considered underdrain? The bid form does not show 8" storm. Please advise.
A3: 8" storm pipe is considered underdrain. The bid quantity should 165' not 155'. (See revised bid form number 334400-3).

Q4: For the landscape perforated and solid underdrain; this material is not shown clearly on the plans; please advise where the landscape underdrain is located.
A4: Reference Sheet L1.1, detail callout 5.9, in the play area south of the Interstate Building, visible between the cleanouts (detail callout 5.10). Reference Sheet L1.2, detail callout 5.9, in the crusher fines areas west of the EEB Building 2.

Q5: Per the bid docs; the 4" and 6" underdrain LF quantities does not match; is the LF of the 4" & 6" reversed? Please advise.
A5: There is no 4" underdrain. Use 6" quantity only. Bid item number 334400-1 has been removed from bid form number 6.19.

Q6: Sheet C2.1 & C6.2 show a Water service line; Sheet C2.1 Call out a 1" line and on sheet C6.2 calls out a 1.5" line. Please advise which size of line is required.
A6: Refer to C6.2, the 1.5" line is required.

Q7: There is a 2" irrigation line shown on the plans but not on the bid doc; please advise where the 2" irrigation line will be accounted for in the bid docs.
A7: Irrigation mainlines are included in the Irrigation (lump sum) bid item.

Q8: Sewer services on sheet C2.1 shows and 4" & 6" line while C6.3 shows these lines to be 4". Bid docs do not call out size of line; please advise what size of line is required for the sewer service line.
A8: C2.1 is correct, demonstrating both a 4" and a 6" line.

Q9: Sewer lines do not give depth pipe; at what depth is the sewer line to be at? Elevations are not clear on depth on sheets C2.1 and C6.3. Please advise depth of pipe.
A9: 4" depth: 2.5' to 5'. 6" depth: 5' to 6'.

Q10: Demo is required per the plans but not shown on the bid docs; please advise where the demo cost should be accounted for in the bid docs.
A10: See Site Works-Removals and Earthwork sections of the bid form for demolition line items.

Q11: In reference to Plan Sheet DM 1.2 and Maker's Plaza-EEB Floor Enlargement. Plans indicate that the central portion of the Police Service/EEB Building is to be demolished and the west and east portions are to remain. Notes on the plan call out to *"RE: Arch for Roof, Wall & Interior Demolition plans, TYP"*. *"Preserve Walls & Columns, TYP. Unless otherwise noted in architecture sheets"*. There are no Architectural Drawings, Technical Specifications or Bid Items for this scope of work. Please clarify with additional information.
A11: See updated DM 1.2 sheet for extent of demo in Schedule B for Maker's Plaza. The construction of Maker's Plaza will include a building demo and construction scope of work that is not included in this contract. The building work will commence in a similar timing as this Park contract and the Park general contractor is expected to coordinate with the building contractor on the sequencing and scheduling for Maker's Plaza demo in Schedule B.

Q12: The description of Bid Item 020000-8 is Salvage & Store Materials For Re-Use (brick, steel, furnishings) – 1 LS. There is nothing shown on the Demo Drawings and scope of work for this item is not defined in the Technical Specifications. I would assume it pertains to the central portion of the Police Service / EEB Building that is to be demolished. Please clarify scope of work and provide Drawings and Technical Specifications that pertain to this item.
A12: Salvage and Store Materials as pertaining to the Park would include the re-used concrete slabs, that are noted in the Demolition plans, and again in the layout & materials plans (where they are used in the "Recycled Concrete Paving), and in the details (for the "Recycled Concrete Paving" detail 06 Sheet L4.1;, and also for "Recycled Concrete Benches", Sheet F1.)

Q13: There are notes for Festival Street that show asphalt thickness but nothing showing thickness on the park. Can you please provide an asphalt thickness or do we include 7.5" per the Festival details?
A13: Include 7.5" for asphalt thickness in accordance to recommendation in the Geotechnical Report for onsite loadings.

Q14: I measured the water quality ponds around 10,6600 sf. I do not see a line item pertaining to the water quality ponds, nor do I see a line item for the rain garden growing media. What are we to do with this? Will this fall under landscaping LS?
A14: Rain Garden Growing Media is included in the landscape lump sum line item.

Q15: What is the mix details for the structural soil? I could not find the blend in the plans nor the specifications.
A15: See spec section 320513 CU Structural Soil.

Q16: What type of rock mulch would you like to utilize on site? I did not see a specific blend or size called out in the plans or specifications.
A16: Rock mulch shall be ¾" Mountain Granite or approved equal.

Q17: In the soil legend, it states that the sod locations are to receive 6" of new topsoil, does this mean we no longer have to amend the topsoil @ 4 CY/1000 SF of compost, as stated in the soil preparation specifications? Are the shrub beds the only area to receive the soil preparation, as they have the amended topsoil legend #2? [L1.3]
A17: All sod and planting areas must be amended 4 CY/1000 SF in accordance with Denver Water requirements.

Q18: What does the plan set mean by reinforced turf? I do not see any details pertaining to this in the specifications nor the plans.
A18: For the rundown from Pond 2 to Pond 3, the reinforced turf shall be concrete Grass-Crete, manufactured by Grass Concrete Inc, or approved equal, installed per Manufacturer's recommendations. For all other instances, refer to Urban Drainage and Flood Control's *Urban Storm Drainage Criteria Manual Volume 3*, Section EC-6 Rolled Erosion Control Products, page RECP-4, Table RECP-2 (provided).

Q19: Is there any information on the paver restraint system @ the trees? I see the one detail on page 66/102, however, I could not find anything in the specifications. Are we to field fit this item or is there something manufactured already that you would like us to install?
A19: Fabricate according to the detail.

Q20: Which specification should we default to for the topsoil & soil amendments? There's section 32 91 20 [topsoil] , section 32 91 13 [Soil Preparation] & the revised section 207 [which prescribes topsoil & amendments]. The revision of 207 states that we are to utilize A1 Organics Amended Topsoil & to amend the seed, lawn, and shrub beds @ 3 CY/1000 SF of Class II compost. Section 32 91 13 states that we are to add 4 CY/1000 SF to turf & shrub beds of Class I compost & biosol for the native areas. What are we to default to? These are two different prescriptions for the soil.
A20: Section 207 is part of the Festival Street package (Schedule A) which includes re-seeding. Reference Section 207 for seeding/repair work associated with Schedule A work. For Schedule B, Park Package, defer to the Park specifications (32 91 20 and 32 91 13) for all planting areas in the Park (Schedule B). 4CY/1000 SF is required for all park landscaping areas, per Denver Water's irrigation requirements.

Q21: Is the GC responsible for the DWB Tap Fees? It appears the 1-1/2" Tap Fee is $42K and the 2" is +/- $50k.
A21: Denver is not charged a tap fee by Denver Water. GC is responsible for fee for meter inspection and meter.

This **ADDENDUM** shall be attached to, become a part of, and be returned with the Bid Proposal.

Lesley B. Thomas
City Engineer

1.31.19
Date

The undersigned bidder acknowledges receipt of this Addendum. The Proposal submitted herewith is in accordance with the stipulations set forth herein.

Contractor

ADDENDUM NO. 2

Date

Item No.	Description and Price	Estimated Quantity	Estimated Cost
329113-1	**Landscape** at the unit price of $_____per LUMP SUM.	1 LS	$ _____
331416-1	**6" Ductile Iron Pipe** at the unit price of $_____per LINEAR FOOT.	45 LF	$ _____
331416-2	**Water- 6 inch Gate Valve** at the unit price of $_____per EACH.	1 EA	$ _____
331416-3	**Water - 8 in DI** at the unit price of $_____per LINEAR FOOT.	587 LF	$ _____
331416-4	**Water - Fittings** at the unit price of $_____per EACH.	5 EA	$ _____
331416-5	**Water - 8 inch Gate Valve** at the unit price of $_____per EACH.	2 EA	$ _____
331416-6	**Water - Connection to Existing Water Line** at the unit price of $_____per EACH.	1 EA	$ _____
331416-7	**Water - Disinfection & Testing** at the unit price of $_____per LUMP SUM.	1 LS	$ _____
331416-8	**Fire Line Stubouts** at the unit price of $_____per EACH.	3 EA	$ _____
331416-9	**Fire Hydrant Assembly** at the unit price of $_____per EACH.	1 EA	$ _____
331416-10	**Water - Service Line Stubouts** at the unit price of $_____per EACH.	3 EA	$ _____

Item No.	Description and Price	Estimated Quantity	Estimated Cost
331416-11	**Water - Denver Water Hydrant Inspection Fee, Meter Setting** at the unit price of $_____per LUMP SUM.	1 LS	$ _____
331416-12 (new bid item)	**Water – 6" PVC at the unit price of** $_____per LINEAR FOOT.	5.8 LF	$ _____
333100-1	**Sanitary-Service Line Stubouts** at the unit price of $_____per EACH.	2 EA	$ _____
334400-1 (removed)			
334400-2	**Storm- 6" PVC Underdrain** at the unit price of $_____per LINEAR FOOT.	973 LF	$ _____
334400-3	**Storm- 8" PVC Underdrain** at the unit price of $_____per LINEAR FOOT.	165 LF	$ _____
334400-4	**Landscape PVC Solid Underdrain** at the unit price of $_____per LINEAR FOOT.	68 LF	$ _____
334400-5	**Landscape PVC Perforated Underdrain** at the unit price of $_____per LINEAR FOOT.	117 LF	$ _____
334400-6	**Clean-outs** at the unit price of $_____per EACH.	24 EA	$ _____
334400-7	**Storm-Sidewalk Chase** at the unit price of $_____per EACH.	6 EA	$ _____
334400-8	**Storm-Trench Drains** at the unit price of $_____per LINEAR FOOT.	21 LF	$ _____

RIVER NORTH PARK

BID SET - ADDENDUM 1 IRRIGATION REVISIONS

JANUARY 2019

WENK PROJECT NO. 15014.00 DPW PROJECT CONTROL NO. 2016-PROJMSTR-00000124

NORTHEAST QUARTER OF SECTION 27, TOWNSHIP 3 SOUTH, RANGE 68 WEST OF THE SIXTH PRINCIPAL MERIDIAN

SHEET INDEX

COVER SHEETS

CV1.0	GENERAL NOTES

EXISTING CONDITIONS

EX1.1 - 1.2	EXISTING CONDITIONS

EROSION CONTROL

C3.1	EROSION CONTROL PLAN (INITIAL)
C3.2	EROSION CONTROL PLAN (INTERIM)
C3.3	EROSION CONTROL PLAN (FINAL)

DEMOLITION

DM1.1 - 1.2	DEMOLITION PLANS

GRADING/CIVIL

C2.0	NOTES
C2.1	OVERALL GRADING & UTILITY PLAN
C2.2-2.5	DETAILED GRADING PLANS

STORMWATER

C5.1-5.2	POND DETAILS
C5.3	STORM SEWER PLAN & PROFILE
C5.4	STORM SEWER DETAILS
C5.5	DRAINAGE MAP

UTILTIES

C6.0	WATER COVER SHEET
C6.1	WATER LINE NOTES & DETAILS
C6.2	WATER ONLY PLAN
C6.3	OVERALL UTILITY PLAN

LAYOUT & MATERIALS

L1.0	OVERALL LAYOUT PLAN & NOTES
L1.1 - L1.2	LAYOUT & MATERIALS PLANS
L1.3 - L1.4	SOILS & MULCHING PLANS
L3.0 - L3.1	LANDSCAPE SECTIONS
L4.1 - L4.15	LANDSCAPE DETAILS

PLANTING

PL1.0	PLANTING NOTES & PLANT SCHEDULE
PL1.1 - PL1.4	PLANTING PLANS
PL4.1 - PL4.2	PLANTING DETAILS

IRRIGATION

⚠ IR-1	IRRIGATION SCHEDULE AND NOTES
IR-2	IRRIGATION HYDROZONE PLAN
IR-3	IRRIGATION CHARTS
⚠ IR-4	IRRIGATION PLAN
IR-5 - IR-11	IRRIGATION DETAILS

LIGHTING & ELECTRICAL

LE0.0	COVER SHEET
LE1.1	SITE ELECTRICAL PLAN
LE2.1	SITE LIGHTING PLAN
LE4.0	ELECTRICAL ONE-LINE
LE5.0	ELECTRICAL DETAILS
LE6.0	ELECTRICAL SCHEDULES

FURNISHINGS & SITE ELEMENTS

F1-6	SITE FURNISHINGS & SITE ELEMENTS
F7-8	ELECTRICAL ENCLOSURES

VICINITY MAP

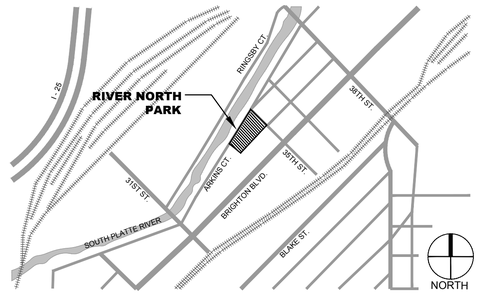

City and County of Denver
Parks and Recreation Department
Checked for General Compliance with applicable Denver Criteria, Rules, Regulations and Standards.

APPROVED (if validly signed)

Approved by: Director of Planning Date

(Note: Signature in Print)

APPROVED AS TO FORM.
DRAWINGS AND DESIGN ADEQUACY ARE ACCEPTED BASED UPON THE PROJECT LANDSCAPE ARCHITECT'S ATTACHED SEAL OF REGISTRATION.

(Project Landscape Architect's Professional Seal, Signature and Date)

CITY AND COUNTY OF DENVER DEPARTMENT OF PUBLIC WORKS

APPROVED BY:

EXECUTIVE DIRECTOR OF PUBLIC WORKS DATE

CITY ENGINEER DATE

DIRECTOR OF ENGINEERING CAPITAL PROJECTS DATE

CITY TRAFFIC ENGINEER DATE

Landscape Architect-Prime Consultant
Nicole Horst/Tyrel Sturgeon
Wenk Associates, Inc.
1130 31st Street, Suite 101
Denver, Colorado 80205
303.628.0003

Civil Engineering
Jay Peters
EES, Inc.
518 17th Street, Suite 1575
Denver, Colorado 80202
303.572.7997

Structural Engineering
Leslie Tyson
LT Engineering, LLC
5620 Zuni Street
Denver, Colorado 80221
303.477.3861

Irrigation
Ken DiPaolo
Hydosystems KDI, Inc.
860 Tabor Street, Suite 200
Lakewood, Colorado 80401
303.980.5327

Lighting & Electrical
Gregg Adams
BCER Engineering, Inc.
5420 Ward Rd, Suite 200
Arvada, CO 80002
303.463.7772

Geotechnical
Don Hunt
Rocksol Consulting Group, Inc.
6510 W. 91st Ave, Suite 130
Westminster, CO 80031
303.962.9300

Architecture/Art
Mike Moore / Jack Ricci
tres birds workshop
3821 Steele Street, Unit B
Denver, CO 80205
303.442.3790

Denver Parks & Rec Project Manager
Owen Snell - PM
City and County of Denver
720.913.0618

wenk ASSOCIATES PLANNERS & LANDSCAPE ARCHITECTS 303.628.0003

DENVER THE MILE HIGH CITY

Irrigation Schedule

SYMBOL	MANUFACTURER	MODEL NO.	DESCRIPTION	DETAIL NO.
	RAIN BIRD	1806-SAM-PRS WITH MPR SERIES NOZZLE	POPUP SPRAY HEAD	7
	RAIN BIRD	1812 SAM-PRS W/ MPR SERIES NOZ.	HI-POP SPRAY HEAD	7
#2 #4 #8 #8	HUNTER	I-20-06-SS WITH # NOZZLE	GEAR DRIVEN ROTOR	8
#2 #4 #4 #4	HUNTER	I-20-12-SS WITH # NOZZLE	HI-POP GEAR DRIVEN ROTOR	8
	RAIN BIRD	PESB-PRS-D- W/ SB-DAC1 DECODER	ELECTRIC CONTROL VALVE W/ DECODER	11, 12
	BUCKNER	QB44RCAR10	QUICK COUPLING VALVE	5
A	TORO	TORO SENTINEL SBTW-AC2WIRE-U2-SB18SS-PCDG/VRA-GFI-FK	ELECTRIC CONTROLLER - 2 WIRE	15
N/S	TORO		HAND-HELD REMOTE	N/S
R	HUNTER	WR-CLIK	RAIN SHUT-OFF DEVICE	14
	FEBCO	825 YA	BACKFLOW PREVENTION DEVICE	9
	SUPERIOR DATA INDUSTRIAL	# 3100-24V-NO IR-220P-2"	MASTER VALVE FLOW SENSOR	21
N/S	GUARDSHACK	GS-M1 W/ SENTRY SC75-200 LOCKING DEVICE	BACKFLOW ENCLOSURE	10
N/S	MCDONALD	6101 SERIES	MANUAL DRAIN VALVE	6

1

Irrigation Schedule

SYMBOL	MANUFACTURER	MODEL NO.	DESCRIPTION	DETAIL NO.
	LEEMCO	GASKETED PUSH ON W/ SQ. NUT	GATE VALVE W/ RESTRAINTS	4
		CLASS 200 BE - 2.5" & SMALLER	PVC MAINLINE	1
N/S	LEEMCO		MECHANICAL JOINT RESTRAINTS	3
		CLASS 200 BE	PVC LATERAL -1" MIN.	1
		CLASS 200	PVC SLEEVING	2
	RAIN BIRD	XCZ-100-PRB-COM W/ DECODER	SUBSURFACE VALVE ASSEMBLY	20 & 12
			TREE RING BLOW-OUT STUB	19
	NETAFIM	TLCV6-18 ROWS SPACED 18"	SUBSURFACE DRIPLINE	17&18
	RAINBIRD	1402 /1408 - PER DETAIL	BUBBLER RINGS - TREE	16
	SPEARS	2622-015 SERIES	1.5" PVC BALL VALVE	16
M			WATER METER	RE: CIVIL
N/S	TORO	SB-DAC-1	VALVE DECODER (1 ST.)	11&12
G A	TORO	SB-BLA	GROUNDING LOCATION	13
N/S	PAIGE	P7171D	SENSOR WIRE	N/S
N/S	REGENCY	MAXI-CABLE (RED)	2-WIRE DECODER CABLE	8
GPM			CONTROLLER & STATION NO. CONTROL VALVE SIZE	

1 1 1

CONTRACTOR TO BID THE "PRS-D" PRESSURE REGULATORS ON THE CONTROL VALVE ASSEMBLIES. BEFORE ORDERING THESE UNITS. ONCE SYSTEM IS INSTALLED AND OPERATING, COORDINATE WITH PROJECT MANAGER AND CONSULTANT, AS TO WHAT ZONES MAY OR MAY NOT REQUIRE PRESSURE REGULATION. CREDIT WILL BE ISSUED BACK TO CITY IF NOT INSTALLED. REFER TO CITY OF DENVER PARKS GENERAL NOTES AND SPECIFICATIONS IN DEALING WITH THE SITUATION.

811 Know what's below. Call before you dig.
CALL 3 BUSINESS DAYS IN ADVANCE BEFORE YOU DIG, GRADE, OR EXCAVATE FOR THE MARKING OF UNDERGROUND MEMBER UTILITIES.

Irrigation Construction Notes

1. DRAWINGS AND BASE INFORMATION – ALL BASE AND PLANTING INFORMATION HAVE BEEN PROVIDED BY WENK. THE CONTRACTOR IS RESPONSIBLE TO NOTIFY HYDROSYSTEMS*KDI OF ANY DISCREPANCIES BETWEEN THE UTILITY OR PLANTING PLANS AND THE IRRIGATION PLAN. IF CONTRACTOR FAILS TO NOTIFY HYDROSYSTEMS*KDI AND MAKES CHANGES TO THE IRRIGATION SYSTEM DESIGN, HE ASSUMES ALL COSTS AND LIABILITIES ASSOCIATED WITH THOSE FIELD CHANGES. REFER TO SPECIFICATIONS FOR ADDITIONAL PROJECT REQUIREMENTS.

2. SYSTEM PRESSURE – HYDROSYSTEMS*KDI HAS CONTACTED DENVER PARKS AND RECREATION AND THEY HAVE BEEN TOLD THAT THE STATIC WATER PRESSURE SHOULD BE 75 PSI MIN. THE CONTRACTOR IS RESPONSIBLE TO FIELD VERIFY PRESSURE PRIOR TO COMMENCING ANY CONSTRUCTION AND NOTIFY HYDROSYSTEMS*KDI OF ANY VARIANCE FROM THE STATED PRESSURE. IF CONTRACTOR FAILS TO FIELD VERIFY PRESSURE AND/OR NOTIFY HYDROSYSTEMS*KDI OR ANY VARIATIONS FROM THIS PRESSURE, THEN HE ASSUMES ALL CONSTRUCTION AND ENGINEERING COSTS ASSOCIATED WITH SYSTEM MODIFICATIONS REQUIRED TO ACCOMMODATE ACTUAL SITE PRESSURE. THIS SYSTEM HAS BEEN DESIGNED FOR A REQUIRED DISCHARGE PRESSURE OF 75 PSI MINIMUM.

3. IRRIGATION SYSTEM OPERATION INTENT – THIS IRRIGATION SYSTEM HAS BEEN DESIGNED TO IRRIGATE THE ESTABLISHED LANDSCAPE WITHIN A THREE NIGHT PER WEEK, EIGHT HOUR PER NIGHT WATERING WINDOW. ESTABLISHMENT WATERING WILL REQUIRE UP TO TWICE AS MUCH IRRIGATION FOR A FOUR TO SIX WEEK PERIOD. THE DESIGN IS BASED ON THE FOLLOWING PROJECTED WEEKLY APPLICATION RATES AFTER ESTABLISHMENT. THESE FIGURES ARE BASED ON A 30-YEAR AVERAGE WEATHER DATA AND WILL NEED TO BE ADJUSTED DUE TO SEASONAL CHANGES AND WEATHER CONDITIONS ABOVE AND BELOW THE AVERAGE VALUES UTILIZED.

BLUEGRASS TURF	2.22" PER WEEK PEAK SEASON
ORNAMENTAL PLANTINGS	0.93" PER WEEK PEAK SEASON
NATIVE SEED MIXES	0.77" PER WEEK PEAK SEASON (TWO SEASONS)

NOTE: IT IS THE INTENT OF THIS DESIGN THAT NATIVE AREAS WOULD ONLY BE IRRIGATED FOR ESTABLISHMENT.

4. EQUIPMENT INSTALLATION – IT IS THE INTENT OF THIS DESIGN THAT ALL IRRIGATION EQUIPMENT BE INSTALLED WITHIN PROPERTY LIMITS AND WITHIN LANDSCAPED AREAS. ANY EQUIPMENT SHOWN OUTSIDE OF THESE LIMITS IS SHOWN IN THAT LOCATION FOR GRAPHICAL CLARITY ONLY. ALL VALVE BOXES SHALL BE INSTALLED A MINIMUM OF 6'-0" FROM EDGE OF ANY PAVED SURFACES. ALL VALVE BOXES SHALL BE PLACED A MINIMUM OF 3'-0" FROM THE CENTERLINE OF ANY DRAINAGE SWALE.

5. SLEEVING – ALL MAINLINE OR LATERAL LINES UNDER PAVED SURFACES SHALL BE SLEEVED. ALL SLEEVING UNDER PAVED SURFACES SHOWN ON PLANS IS BY CONTRACTOR UNLESS OTHERWISE NOTED. SLEEVING SHALL BE INSTALLED IN THE SIZES AND QUANTITIES SHOWN ON PLANS OR BASED ON THE SCHEDULE BELOW. WHERE SLEEVES ARE SHOWN, BUT NOT LABELED, FOLLOW THE SCHEDULE BELOW. ALL MAINLINE, CONTROL WIRES AND DRIP LINES UNDER PAVED SURFACES ARE TO BE INSTALLED IN SLEEVING.

SLEEVED PIPE SIZE/WIRE QUANTITY	REQUIRED SLEEVE SIZE & (QUANTITY)
1" – 1¼" PIPING	2" PVC (1)
1½" – 2" PIPING	4" PVC (1)
2½" – 3" PIPING	6" PVC (1)
DECODER CABLE	2" PVC (1)

NOTE: EACH LENGTH OF SLEEVED PIPE SHOWN SHALL BE ROUTED THROUGH SEPARATE SLEEVE.

6. POP-UP SPRAY NOZZLES – CONTRACTOR TO INSTALL PLASTIC NOZZLES ON ALL POP-UP SPRAY HEADS. INSTALL 15 SERIES NOZZLES ON ALL HEADS SPACED AT 13' TO 15'. INSTALL 12 SERIES NOZZLES ON ALL HEADS SPACED 11' TO 12'. INSTALL 10 SERIES NOZZLES ON ALL HEADS SPACED AT 9' TO 10'. INSTALL 8 SERIES NOZZLES ON ALL HEADS SPACED LESS THAN 8'. INSTALL SIDE STRIP NOZZLES ON ALL HEADS WITH AN "S" DESIGNATION AND RIGHT AND LEFT CORNER STRIP NOZZLES ON ALL HEADS WITH AN "L" OR "R" DESIGNATION. VARIABLE ARC NOZZLES SHOULD BE UTILIZED ADJACENT TO CURVILINEAR SHRUB BEDS OR FOR ANY ANGLES THAT ARE NOT A STANDARD NOZZLE ANGLE (MAY REQUIRE APPROVAL BY PROJECT MANAGER SPECIFIC TO SITUATION).

7. TREES SHOWN ON IRRIGATION PLANS ARE APPROXIMATE.

8. ALL IRRIGATION HEAD LOCATIONS SHALL BE STAKED, FLAGGED AND/OR OTHERWISE CLEARLY MARKED ON THE GROUND PRIOR TO INSTALLATION. SPRINKLER HEAD STAKING SHALL BE INSPECTED AND APPROVE BY THE CONSULTANT PRIOR TO INSTALLATION. STAKED LOCATIONS SHALL BE SPACED TO PROVIDE HEAD-TO-HEAD COVERAGE. CONTRACTOR IS RESPONSIBLE FOR HEAD TO HEAD COVERAGE IN IRRIGATION SYSTEM. CONTRACTOR SHALL FIELD-STAKE PROPOSED AND EXISTING ROTOR LOCATIONS WITH FLAGS OF DIFFERENT COLORS FOR REVIEW/ADJUSTMENT AND APPROVAL PRIOR TO INSTALLATION.

9. CHALK PROPOSED LATERAL PIPE ROUTING WITHIN DESIGNATED TREE MASSES AND OBTAIN APPROVAL FROM DENVER DEPARTMENT OF FORESTRY AND DISTRICT REPRESENTATIVE PRIOR TO TRENCHING AND/OR PLOWING OF PIPING AND/OR EXCAVATING FOR HEAD INSTALLATION.

10. CONTRACTOR SHALL INSTALL #10-UFUL YELLOW TRACER WIRE ALONG THE ENTIRE LENGTH OF THE PVC MAINLINE. LOOP INTO EACH VALVE BOX.

11. EXCESS DIRT GENERATED BY TRENCHING OPERATIONS SHALL BE DISPOSED OF BY CONTRACTOR AT OFF-SITE LOCATION AT NO ADDITIONAL COST TO OWNER.

12. FINAL RADIO FREQUENCY WILL BE DETERMINED BY DENVER PARKS WATER CONSERVATION SECTION. IRRIGATION CONTRACTOR TO FURNISH ALL COMPONENTS FOR THE CONTROLLER, INCLUDING TORO CONTROLLERS, RADIOS, V.I.T. ENCLOSURE AND SUBASSEMBLY (PRE-WIRED), ANTENNAS AND CABLE. IRRIGATION CONTRACTOR TO COORDINATE ALL CONTROLLER EQUIPMENT REQUIREMENTS WITH DENVER PARKS PRIOR TO ORDERING.

13. ADJUSTMENT – CONTRACTOR SHALL FINE TUNE/ADJUST THE IRRIGATION SYSTEM TO REDUCE/AVOID OVERSPRAY ONTO HARD SURFACES BY ADJUSTING NOZZLE DIRECTION AND NOZZLE RADIUS.

14. CONTRACTOR SHALL PREVENT SEDIMENT, DEBRIS AND ALL OTHER POLLUTANTS FROM ENTERING THE STORM SEWER SYSTEM DURING ALL DEMOLITION OR CONSTRUCTION OPERATIONS THAT ARE PART OF THIS PROJECT. THE CONTRACTOR AND/OR THEIR AUTHORIZED AGENTS SHALL REMOVE ALL SEDIMENT, MUD, AND CONSTRUCTION DEBRIS THAT MAY ACCUMULATE IN THE FLOWLINES AND PUBLIC RIGHTS OF WAYS OF THE CITY AND COUNTY OF DENVER AS A RESULT OF THIS CONSTRUCTION PROJECT. SEDIMENT REMOVAL SHALL BE CONDUCTED IN A TIMELY MANNER.

15. CONTRACTOR SHALL PREPARE AND SUBMIT A PLAN FOR STAGING. IT IS REQUIRED THAT ONE AREA IS COMPLETED BEFORE ANOTHER AREA IS BEGUN. STAGING EQUIPMENT IN AREAS NOT OWNED BY DENVER PARKS SHALL REQUIRE WRITTEN PERMISSION OF THE LANDOWNER AND MUST BE APPROVED BY DENVER PARKS OR ITS REPRESENTATIVE.

16. ALL PIPING WITHIN THE DRIPLINE OF EXISTING TREES SHALL BE HAND DUG. ROOTS OVER 2'' IN DIAMETER SHALL NOT BE CUT. PIPING SHALL BE TUNNELED UNDER THESE ROOTS. WHEN IN DOUBT, CONTACT DENVER PARKS FORESTRY DIVISION AND DISTRICT SUPERINTENDENT AND PROJECT MANAGER FOR DECISIONS.

17. UNLABELED PIPING – ALL UNLABELED LATERAL PIPING SHALL BE 1" MINIMUM UNLESS OTHERWISE NOTED.

18. 2-WIRE SYSTEM NOTES – CONTRACTOR SHALL GROUND ALL DECODERS AND DECODER WIRE PER MANUFACTURES RECOMMENDATIONS AND STANDARDS. (MINIMUM OF EVERY 500' OF WIRE AND AT ALL ENDS OF WIRE RUN LONGER THAN 50 LF).
   - 19.1 CONTRACTOR SHALL USE ONLY MANUFACTURED 2-WIRE (REGENCY MAXI-ABLE -RED) WIRE.
   - 19.2 ONLY USE SINGLE STATION DECODER (SB-DAC-1) FOR ALL VALVES.
   - 19.3 LOOP 5' OF 2-WIRE INTO ALL VALVE BOXES (WITH DECODERS AND SPLICES) FOR MAINTENANCE.
   - 19.4 USE ONLY 3M DBR-6 WATER PROOF CONNECTORS ON ALL WIRE SPLICES AND ALL WIRE SPLICES ARE TO BE MADE WITHIN A VALVE BOX WITH CONTROL VALVES OR A SEPARATE 10" ROUND VALVE BOX FOR WIRE SPLICES.
   - 19.5 UTILIZE LIGHTNING ARRESTORS (SB-BLA), AS SHOWN ON PLAN.
   - 19.6 INSTALL SURGE PROTECTOR RODS OR PLATES 8 LF. FROM VALVES, DECODER, AND WIRE.

1

REFER TO SHEET

IR-1	IRRIG. SCHEDULE AND NOTES
IR-2	IRRIGATION HYDROZONE PLAN
IR-3	IRRIGATION CHARTS
IR-4	IRRIGATION PLAN
IR-5 - IR-11	IRRIGATION DETAILS

1

KENNETH JAMES DIPAOLO CERTIFIED IRRIGATION DESIGNER GOLF COURSE 011099

HydroSystems-KDI, Inc. Irrigation Consulting
860 Tabor Street Suite 200
Lakewood, Colorado 80401
303-980-5327
(fax) 303-980-5384

wenk ASSOCIATES PLANNERS & LANDSCAPE ARCHITECTS 303.628.0003

DENVER THE MILE HIGH CITY

RIVER NORTH PARK
DENVER, COLORADO

FOR AND ON BEHALF OF WENK ASSOCIATES NOT VALID WITHOUT ORIGINAL SIGNATURE

KEY PLAN:

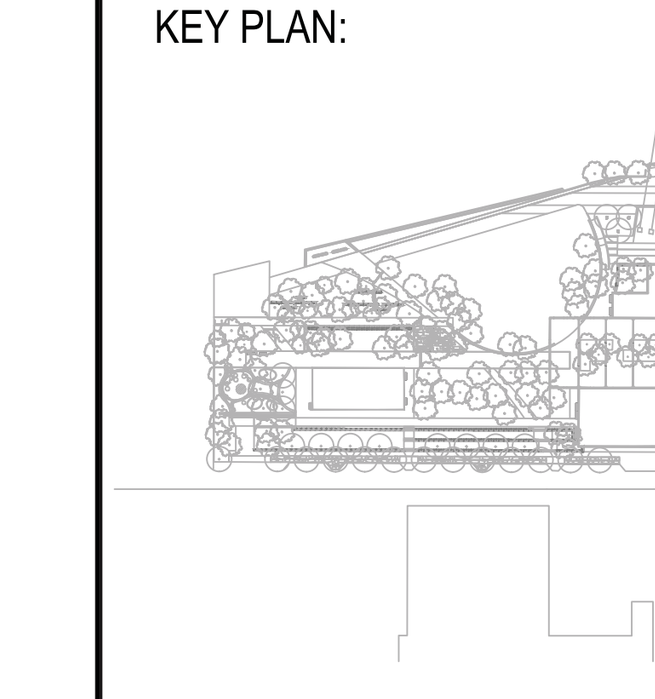

REVISIONS:

NAME	DATE
ADDENDUM #1 - IRRIG. REV.	01-22-19

DRAWN BY: KJD
REVIEWED BY: JSB
PROJECT NUMBER: 15014
DATE: **NOVEMBER 2018**
ISSUE: BID SET
SHEET TITLE: IRRIGATION PLAN
SHEET NUMBER: IR-1

811
Know what's below.
Call before you dig.
CALL 3 BUSINESS DAYS IN ADVANCE BEFORE YOU DIG, GRADE, OR EXCAVATE FOR THE MARKING OF UNDERGROUND MEMBER UTILITIES.

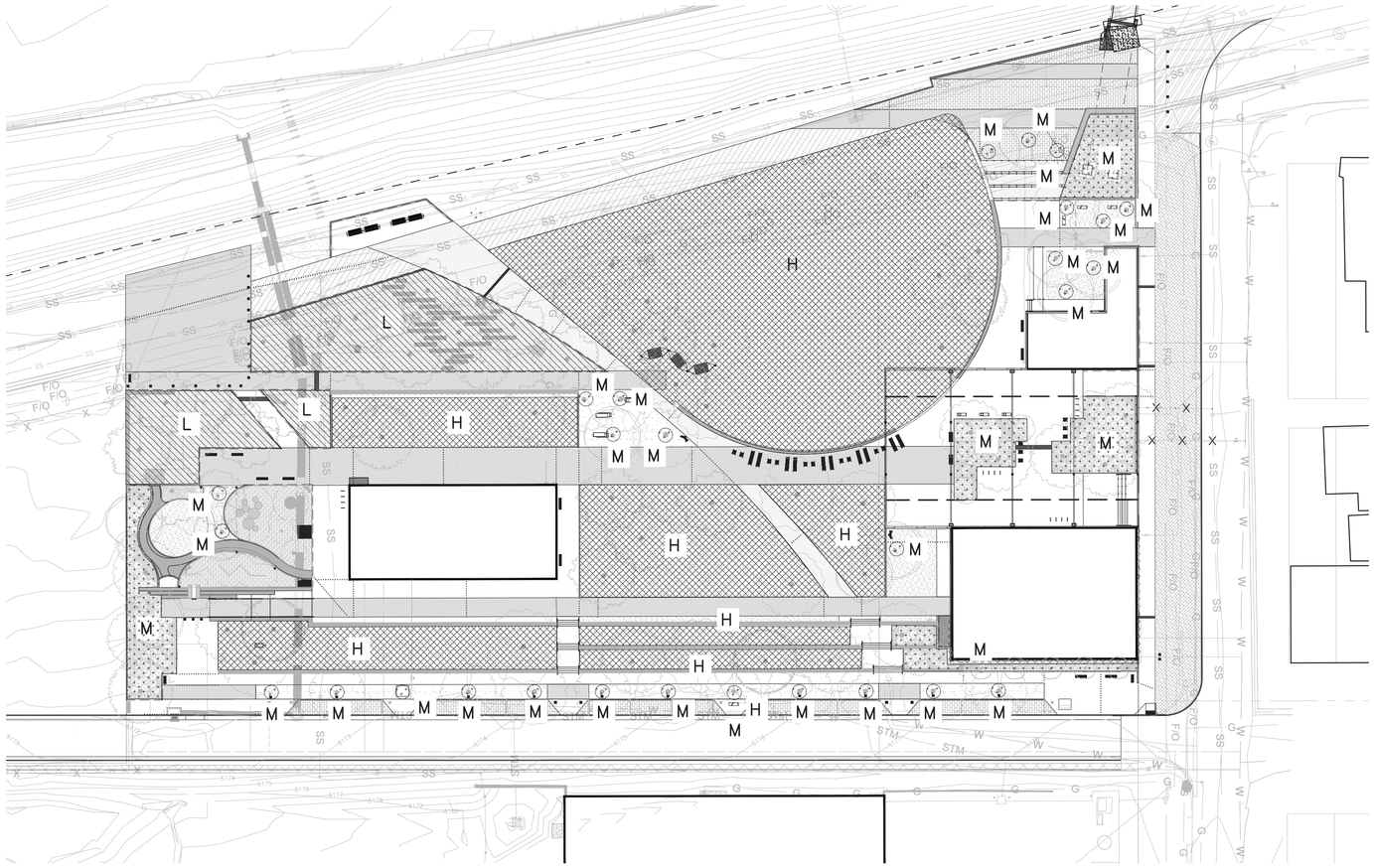

HYDROZONE PLAN

0 40' 80'

NORTH

	HYDROZONE	INCHES PER YEAR	VEGETATION	ACRES
	HIGH (H)	>25" PER YEAR	TURF	1.14 AC
	MODERATE (M)	15"-25" PER YEAR	SHRUB BED	.08 AC
	LOW(L)	<10" PER YEAR	NATIVE SEED	.23 AC.
			TOTAL AC.	1.72 AC.

REFER TO SHEET

IR-1	IRRIG. SCHEDULE AND NOTES
IR-2	IRRIGATION HYDROZONE PLAN
IR-3	IRRIGATION CHARTS
IR-4	IRRIGATION PLAN
IR-5 - IR-11	IRRIGATION DETAILS

1

HydroSystems-KDI, Inc. Irrigation Consulting
860 Tabor Street Suite 200
Lakewood, Colorado 80401
303-980-5327
(fax) 303-980-5384

wenk
ASSOCIATES
PLANNERS & LANDSCAPE ARCHITECTS
303.628.0003

DENVER
THE MILE HIGH CITY

RIVER NORTH PARK
DENVER, COLORADO

FOR AND ON BEHALF OF WENK ASSOCIATES
NOT VALID WITHOUT ORIGINAL SIGNATURE

KEY PLAN:

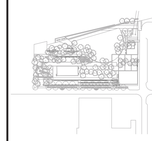

REVISIONS:

NAME	DATE
ADDENDUM #1 - IRRIG. REV.	01-22-19

DRAWN BY:
KJD

REVIEWED BY:
JSB

PROJECT NUMBER:
15014

DATE:
NOVEMBER 2018

ISSUE:
BID SET

SHEET TITLE:
HYDROZONE PLAN

SHEET NUMBER:
IR-2

811
Know what's below.
Call before you dig.
CALL 3 BUSINESS DAYS IN ADVANCE BEFORE YOU DIG, GRADE, OR EXCAVATE FOR THE MARKING OF UNDERGROUND MEMBER UTILITIES.

WATER BUDGET

PROJECT NAME:	River North Park				SUBMITTED B	HydroSystems*KDI	DATE:	27-Nov-2018
DESCRIPTION	IRRIGATED ACRES	MONTH	HISTORICAL ET	PLANT COEFFICIENT	PLANT WATER REQUIREMENT	SYSTEM EFFICIENCY (%)	TOTAL WATER REQUIREMENTS (IN.)	WEEKLY WATER REQUIREMENTS (IN.)	MONTHLY WATER REQUIREMENTS (GAL.)
PLANT TYPE:	1.15	APRIL	2.26	0.88	1.99	65%	3.06	0.69	95,004
Bluegrass		MAY	5.73	0.88	5.04	65%	7.76	1.75	240,873
(High Usage)		JUNE	6.64	0.88	5.84	65%	8.99	2.03	279,127
		JULY	7.27	0.88	6.40	65%	9.84	2.22	305,611
		AUGUST	5.87	0.88	5.17	65%	7.95	1.79	246,758
		SEPTEMBER	4.45	0.88	3.92	65%	6.02	1.36	187,066
		OCTOBER	1.6	0.88	1.41	65%	2.17	0.49	67,260
OPERATING PERIOD-HRS./DAY	5.9		33.82		29.76	TOTAL	45.79	TOTAL	1,421,699
DAYS/WEEK	3							ACRE FEET/YR	4.36
DAYS/MONTH	13.29							PEAK SEASON GPM	65
DESCRIPTION	IRRIGATED ACRES	MONTH	HISTORICAL ET	PLANT COEFFICIENT	PLANT WATER REQUIREMENT	SYSTEM EFFICIENCY (%)	TOTAL WATER REQUIREMENTS (IN.)	WEEKLY WATER REQUIREMENTS (IN.)	MONTHLY WATER REQUIREMENTS (GAL.)
PLANT TYPE:	0.19	APRIL	2.26	0.5	1.13	90%	1.26	0.29	8,516
Shrubs		MAY	5.73	0.5	2.87	90%	3.18	0.73	16,526
(Moderate Usage)		JUNE	6.64	0.5	3.32	90%	3.69	0.85	19,150
		JULY	7.27	0.5	3.64	90%	4.04	0.93	20,967
		AUGUST	5.87	0.5	2.94	90%	3.26	0.75	16,920
		SEPTEMBER	4.45	0.5	2.23	90%	2.47	0.57	12,834
		OCTOBER	1.6	0.5	0.80	90%	0.89	0.20	4,614
OPERATING PERIOD-HRS./DAY	5.9		33.82		16.91	TOTAL	18.79	TOTAL	97,530
DAYS/WEEK	3							ACRE FEET/YR	0.30
DAYS/MONTH	13							PEAK SEASON GPM	5

MINIMUM REQUIRED SYSTEM EFFICIENCIES:
Drip irrigation - 90%
Rotor irrigation - 70%
Spray head irrigation: 65%
April & October ET = 1/2 Monthly Value
ET data from Denver Water weather stations (Average 2003-2008)

PROJECT TOTALS

IRRIGATED ACRES	1.34
GALLONS/YEAR	1,519,237
ACRE FEET/YEAR	4.66
PEAK SEASON GPM	70

WATER USE CHART

C1

Project Name: ***River North Park***
Project Location: ***Denver***

Irrigation System Hydraulic Worksheet
Prepared by HydroSystems-KDI, Inc.

Date: ***19-Oct-17***
Static Water Pressure: ***75.00*** ***From:*** ***Nick***
of: ***Denver Water***

Hydraulic Grade: ***At Zone A11***

Equipment or Material	Quantity (one if not specified)	Nominal Size	Equipment or Pipe Material	Friction Loss Through Pipe per Chart (psi)	Velocity through pipes (ft/sec)	Flow Rate (gpm)	Loss/Gain (psi)
Corp Stop:		2"	Typical Corp. Stop			65	0.40
Svc Line (tap to meter):	50 LF	2"	K Copper	4.18 /100 FT	6.91	65	2.09
Curb Stop:		2"	Typical Curb Stop			65	0.20
Water Meter:		2"	Typical Meter			65	3.20
Svc Line (meter to backflow):	20 LF	2"	K Copper	4.18 /100 FT	6.91	65	0.84
Backflow:		2"	Febco 825			65	12.50
Stop & Waste:		2"	Typical Stop & Waste Valve			65	0.30
Master Valve:		2"	Rainbird EFB			65	2.40
Flow Sensor:		2"	cst Flow Sensor			65	2.00
Gate Valve:	3	2 1/2"	Typical Bronze Gate Valve			65	0.09
Gate Valve:	2	2 1/2"	Typical Bronze Gate Valve			65	0.06
Gate Valve:	0	2"	Typical Bronze Gate Valve			65	0.00
Pressure Required at Head:			Rotor				35.00
Lateral Allowance:							3.00
Control Valve allowance:		2"	Rainbird PEB			65	4.50
Mainline allowances:							
	20 LF	2 1/2"	CL 200 PVC	0.93 /100 FT	3.92	65	0.19
	670 LF LOOPEL	2 1/2"	CL 200 PVC	0.28 /100 FT	2.05	65	1.88
	0 LF	2"	CL 200 PVC	2.34 /100 FT	5.74	65	0.00
Mainline Fitting allowance:			10% of Mainline allowances				0.21
Elevation:							
Tap Elev.	5181		Control Valve Elev.	5184			1.30
Factor of Safety:			5% System Losses				3.51
			Total System requirements (PSI)				***73.65***
			Available pressure (PSI)				***75.00***
			Difference (PSI)				***1.35***

FRICTION LOSS CHART

C2

Project River North Park
Location Denver

Controlle A - Point of Connection # 1 (2")
21-Sep-18

Target Watering Window = 6 nights per week - 3 hours per night (18 hours/week)
Estimated weekly application = 2.22" - Bluegrass (High Usage)
Estimated weekly application = 2.06" - Fescue (Moderate Usage)
Estimated weekly application = 0.93" - Shrubs (Moderate Usage)
Estimated weekly application = 0.77" - Native Plant Material (Low Usage) - Establishment Irrigation Only
Prepared by HydroSystems-KDI, Inc.

Zone No.	Plant Type	Zone Description	Precip. Rate in/hr	Zone Flow GPM	Peak Demand In/wk	Zone run time minutes	Water usage gal/wk	Operating Pressure psi
A1	Turf	Rotor I20-PC #3	0.92	46	2.22	48	6,660	35.00
A2	Tree	Tree Ring	1.00	30	0.93	19	1,674	30.00
A3	Turf	Popup Spray 10 ft	1.75	37	2.22	25	2,816	30.00
A4	Turf	Popup Spray 10 ft	1.75	36	2.22	25	2,740	30.00
A5	Turf	Rotor I20-PC #4	0.63	47	2.22	70	9,937	35.00
A6	Turf	Popup Spray 12 ft	2.01	16	2.22	22	1,060	30.00
A7	Turf	Rotor I20-PC #2	0.63	13	2.22	70	2,749	40.00
A8	Shrubs	Netafim	1.00	3	0.93	19	167	30.00
A9	Shrubs	Hipop Spray 12 ft	2.01	11	0.93	9	305	30.00
A10	Shrubs	Hipop Spray 15 ft	2.01	48	0.93	9	1,333	30.00
A11	Shrubs	Hipop Spray 15 ft	2.01	26	0.93	9	722	30.00
A12	Tree	Tree Ring	1.00	30	0.93	19	1,674	30.00
A13	Turf	Rotor I20-PC #8	0.89	63	2.22	50	9,429	35.00
A14	Turf	Rotor I20-FC #8	0.44	50	2.22	101	15,136	35.00
A15	Turf	Rotor I20-FC #8	0.44	50	2.22	101	15,136	35.00
A16	Turf	Rotor I20-PC #8	0.89	58	2.22	50	8,680	35.00
A17	Turf	Rotor I20-PC #4	0.92	34	2.22	48	4,923	35.00
A18	Shrubs	Hi Pop Rot I20-PC #4	0.63	38	0.93	30	3,366	30.00
A19	Shrubs	Hipop Spray 12 ft	2.01	35	0.93	9	970	30.00
A20	Shrubs	Hi Pop Rot I20-PC #4	0.63	20	0.93	30	1,771	30.00
A21	Tree	Tree Ring	1.00	18	0.93	19	1,004	30.00
A22	Shrubs	Hipop Spray 12 ft	2.01	41	0.93	9	1,136	30.00
A23								
A24								
A25								

Total projected peak season water use per week (gallons) 93,390
Total peak season hours per week - Controller A* 39.58

CONTROLLER CHART

C3

REFER TO SHEET

IR-1	IRRIG. SCHEDULE AND NOTES
IR-2	IRRIGATION HYDROZONE PLAN
IR-3	IRRIGATION CHARTS
IR-4	IRRIGATION PLAN
IR-5 - IR-11	IRRIGATION DETAILS

1

HydroSystems-KDI, Inc. Irrigation Consulting
860 Tabor Street Suite 200
Lakewood, Colorado 80401
303.980.5327
(fax) 303-980-5384

wenk
ASSOCIATES
PLANNERS & LANDSCAPE ARCHITECTS
303.628.0003

DENVER
THE MILE HIGH CITY

RIVER NORTH PARK
DENVER, COLORADO

FOR AND ON BEHALF OF WENK ASSOCIATES
NOT VALID WITHOUT ORIGINAL SIGNATURE

KEY PLAN:

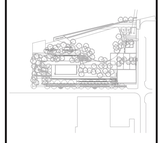

REVISIONS:

NAME	DATE
ADDENDUM #1 - IRRIG. REV.	01-22-19

DRAWN BY:
KJD

REVIEWED BY:
JSB

PROJECT NUMBER:
15014

DATE:
NOVEMBER 2018

ISSUE:
BID SET

SHEET TITLE:
IRRIGATION CHARTS

SHEET NUMBER:
IR-3

A CONTROLLER LOCATION "A"

PEDESTAL MOUNT ONE 204 STATION TORO 2-WIRE CONTROLLER, REMOTE READY, AT INDICATED LOCATION. 120 VOLT POWER IS AVAILABLE WITHIN 40 LF. OF CONTROLLER LOCATION FROM BUILDING (RE: ELECTRICAL). ELECTRICAL METER, WIRE/CONDUIT, STEP-DOWN TRANSFORMER (IF REQUIRED) AND POWER CONNECTION TO CONTROLLER IS BY CONTRACTOR WITH WORK CONFORMING TO LOCAL CODES. EXTEND PAIGE P7171-D ARMORED SIGNAL CABLE FROM THE FLOW SENSOR AND 4 UFUL WIRES (ONE #12 UFUL GREEN COMMON, ONE #14 UFUL BLUE, ONE #12 UFUL GREEN EXTRA COMMON AND ONE #14 UFUL BLUE EXTRA HOT) FROM MASTER VALVE TO CONTROLLER "A". CONNECT WIRES TO THE APPROPRIATE SENSOR INPUT PORTS. FEES AND PERMITS ASSOCIATED WITH WORK ARE TO BE OBTAINED AND PAID BY CONTRACTOR. FINAL CONTROLLER LOCATION SHALL BE APPROVED BY OWNER'S REPRESENTATIVE OR CONSULTANT PRIOR TO INSTALLATION. MOUNT ONE HUNTER RAIN CLIK DEVICE ON BUILDING EAVE WHERE THERE IS 20 FT. OF CLEARANCE FROM ANY OVERHANG OR OBSTRUCTING FEATURE. INSTALL RAIN SENSOR RECEIVER IN CONTROLLER ENCLOSURE. FINAL RAIN SENSOR LOCATION SHALL BE APPROVED BY OWNER'S REPRESENTATIVE OR PROJECT PM PRIOR TO INSTALLATION.

1 POINT OF CONNECTION #1 - 2"

PEAK FLOW REQUIREMENT: 70 GPM. REQUIRED STATIC PRESSURE: 75 PSI MIN.
METER ADDRESS: TBD
METER ACCOUNT #: TBD
TAP ELEVATION: TBD

TIE ONTO EXISTING 2" COPPER STUB-OUT DOWNSTREAM OF WATER METER AT 54" DEPTH IN THIS APPROXIMATE LOCATION. EXTEND 2" TYPE K SOFT COPPER AT 54" MINIMUM DEPTH TO BACKFLOW PREVENTER LOCATION (RE: CIVIL PLANS) AND EXTEND 2" K SOFT COPPER AT 54" DEPTH TO BACKFLOW PREVENTER LOCATION. INSTALL ONE 2" WATER METER PER DENVER WATER STANDARDS, ONE 2" STOP & WASTE VALVE, ONE 2" REDUCED PRESSURE FEBCO 825YA BACKFLOW PREVENTER WITH PROTECTIVE ENCLOSURE, ONE 2" MASTER VALVE, 2" FLOW SENSOR, ONE 1" MANUAL DRAIN VALVE, ONE QUICK COUPLING VALVE AND EXTEND PVC MAINLINE AS SHOWN. EXTEND 4 UFUL WIRES (ONE #12 UFUL GREEN COMMON, ONE #14 UFUL BLUE, ONE #12 UFUL GREEN EXTRA COMMON AND ONE #14 UFUL BLUE EXTRA HOT) FROM MASTER VALVE TO CONTROLLER "A" AND CONNECT TO THE DATA RETRIEVAL BOARD. EXTEND ONE PAIGE P7171-D ARMORED SIGNAL CABLE WIRE FROM FLOW SENSOR TO DATA RETRIEVAL BOARD IN CONTROLLER "A". ONE QUICK COUPLING VALVE AND EXTEND CLASS 200 PVC MAINLINE AS SHOWN. WORK SHALL CONFORM TO LOCAL CODE. FEES AND PERMITS ASSOCIATED WITH WORK ARE TO BE OBTAINED AND PAID BY CONTRACTOR. FINAL LOCATION OF BACKFLOW PREVENTER SHALL BE REVIEWED AND APPROVED BY PROJECT PM PRIOR TO START OF WORK.

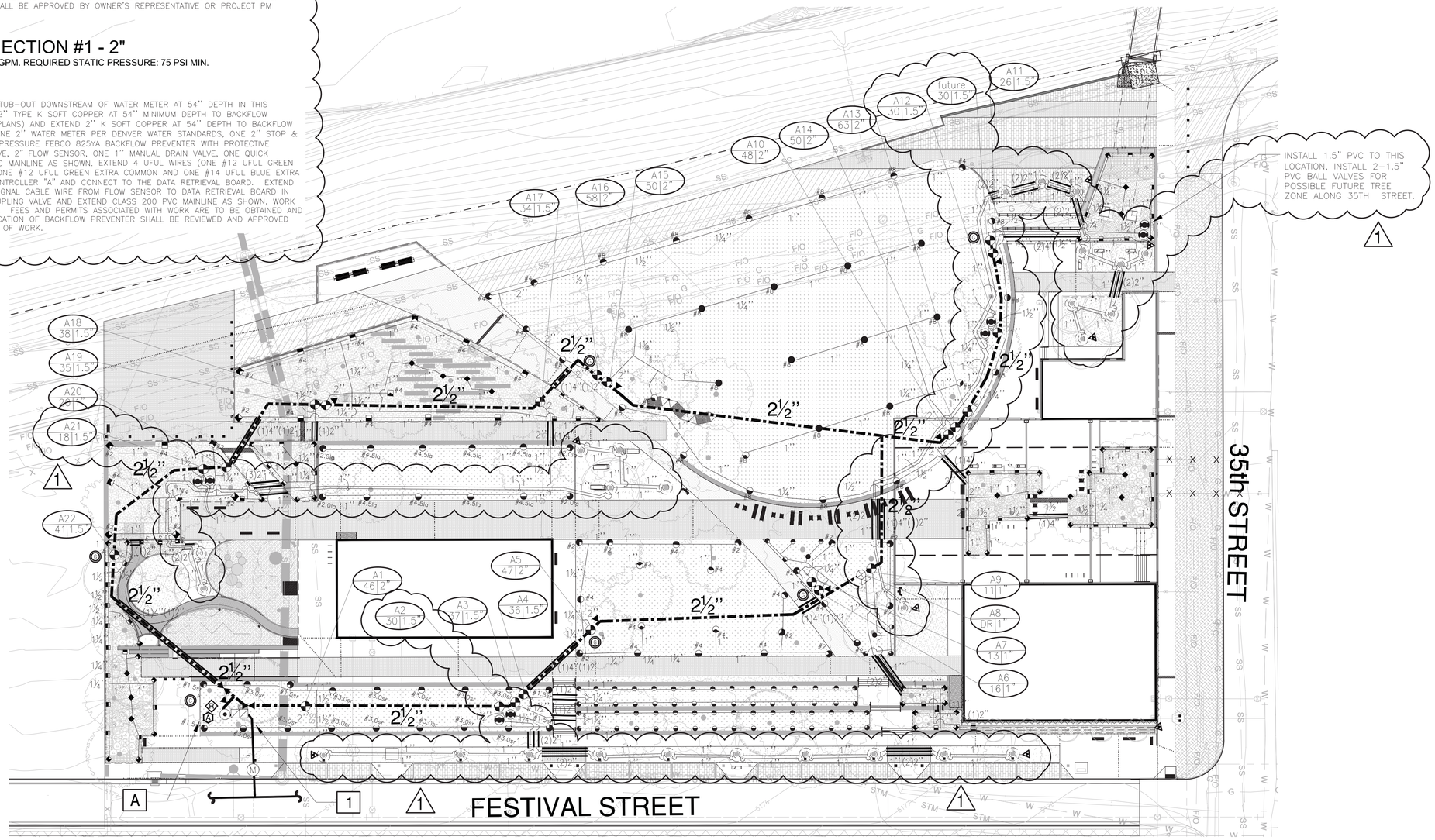

INSTALL 1.5" PVC TO THIS LOCATION, INSTALL 2-1.5" PVC BALL VALVES FOR POSSIBLE FUTURE TREE ZONE ALONG 35TH STREET.

0 30' 60'

NORTH

IRRIGATION EQUIPMENT IS SHOWN IN OUTSIDE LANDSCAPED AREA FOR GRAPHICAL CLARITY ONLY. INSTALL ALL IRRIGATION EQUIPMENT WITHIN LANDSCAPED AREAS.

REFER TO SHEET

IR-1	IRRIG. SCHEDULE AND NOTES
IR-2	IRRIGATION HYDROZONE PLAN
IR-3	IRRIGATION CHARTS
IR-4	IRRIGATION PLAN
IR-5 - IR-11	IRRIGATION DETAILS

811 Know what's below. Call before you dig.
CALL 3 BUSINESS DAYS IN ADVANCE BEFORE YOU DIG, GRADE, OR EXCAVATE FOR THE MARKING OF UNDERGROUND MEMBER UTILITIES.

wenk ASSOCIATES
PLANNERS & LANDSCAPE ARCHITECTS
303.628.0003

DENVER THE MILE HIGH CITY

RIVER NORTH PARK

DENVER, COLORADO

FOR AND ON BEHALF OF WENK ASSOCIATES
NOT VALID WITHOUT ORIGINAL SIGNATURE

KEY PLAN:

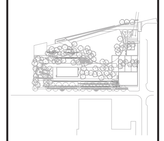

REVISIONS:

NAME	DATE
ADDENDUM #1 - IRRIG. REV.	01-22-19

DRAWN BY: KJD
REVIEWED BY: JSB
PROJECT NUMBER: 15014
DATE: **NOVEMBER 2018**
ISSUE: BID SET
SHEET TITLE: IRRIGATION PLAN
SHEET NUMBER: IR-4

HydroSystems-KDI, Inc. Irrigation Consulting
860 Tabor Street Suite 200
Lakewood, Colorado 80401
303-980-5327
(fax) 303-980-5384

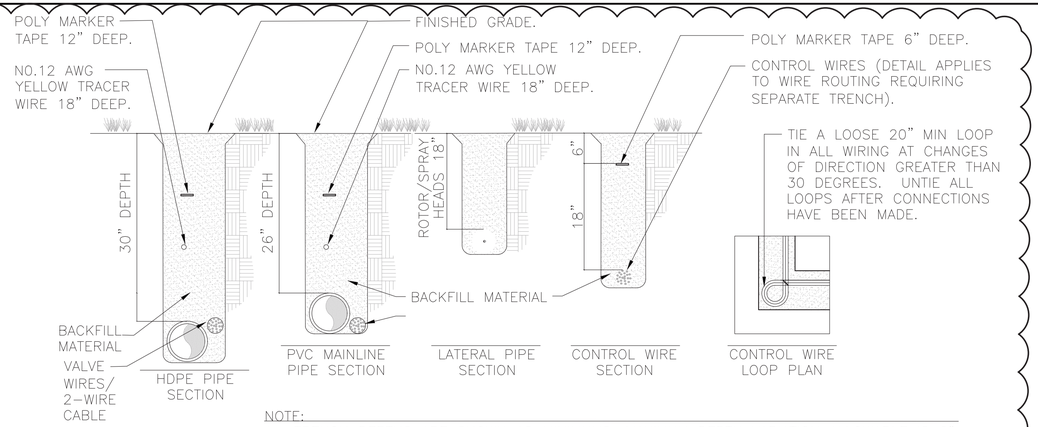

NOTE:
1. TRENCH DEPTHS ARE SHOWN AS MINIMUMS, MAXIMUM DEPTH VARIATION ALLOWABLE IS 2". SEE SPECIFICATIONS FOR MINIMUM TRENCH WIDTHS.
2. MULTIPLE IRRIGATION PIPES SHALL NOT BE INSTALLED IN THE SAME TRENCH.
3. IRRIGATION WIRE SHALL BE PLACED BESIDE IRRIGATION PIPE, NEVER STACKED.
4. BUNDLE AND TAPE ALL WIRES AT 10'-0" MINIMUM SECTIONS.
5. BACKFILL MATERIAL SHALL BE FREE OF RUBBISH, FROZEN MATERIALS, AND STONES LARGER THAN 1". SEE SPECIFICATIONS FOR TYPICAL BACKFILL MATERIAL, PROCEDURES, AND REGULATIONS.

IRRIGATION TRENCH

1

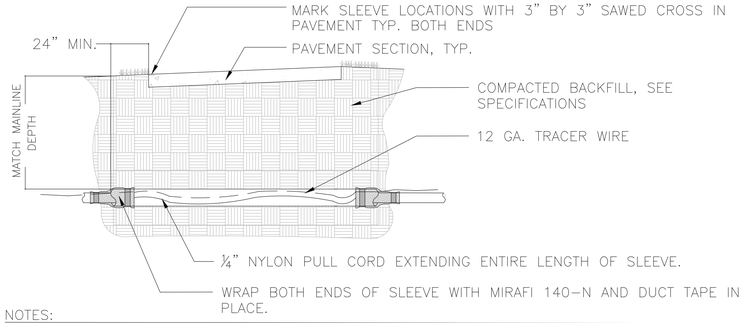

NOTES:
1. SLEEVING SHALL BE CL-200 P.V.C. UNLESS OTHERWISE NOTED ON PLAN.
2. ALL MAINLINE AND LATERAL SLEEVES SHALL BE A MINIMUM OF 2 PIPE SIZES LARGER THAN THE PIPE BEING SLEEVED.
3. DENVER WATER REQUIRES TRACER WIRE IN ALL SLEEVES THAT CROSS STREETS. IF SLEEVE IS FOR MAINLINE AND A TRACER WIRE IS ALREADY INCLUDED, NO ADDITIONAL TRACER WIRE IS NEEDED.
4. SLEEVES SHALL BE INSTALLED AT SAME DEPTH AS MAINLINE OR LATERALS.
5. SLEEVES TO BE INSTALLED 24" DEPTH MINIMUM UNDER ROADWAYS AND 30" DEPTH MINIMUM UNDER TREE CRITICAL ROOT ZONES.

SLEEVING

Rev. 07/15/10

2

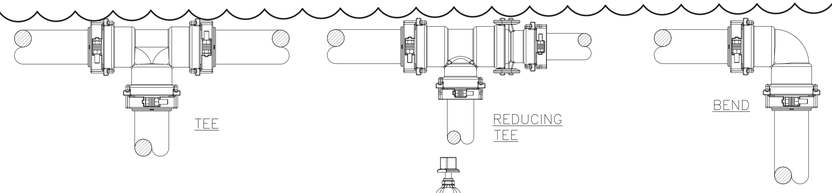

PIPE SIZE	BENDS 11°	22°	45°	90°	REDUCERS 1STEP	2STEP	3STEP	DEAD END BLIND	SERV.B.
2"	1'	1'	2'	6'	–	–	–	19'	6'
2.5"	1'	2'	4'	9'	4'	–	–	23'	10'
3"	2'	3'	6'	11'	8'	10'	–	30'	15'
4"	2'	4'	9'	20'	14'	20'	31'	45'	25'
6"	3'	6'	13'	29'	30'	40'	53'	63'	40'
8"	4'	8'	15	38'	33'	55	63'	75'	70'
10"	5'	9'	19'	45'	36'	56'	75'	96'	90'
12"	5'	10'	21'	53'	38'	60'	83'	112'	110'

NOTES:
1. THE RESTRAINT SCHEMES HERE ARE FOR SYSTEM PRESSURES UP TO 125 PSI. FOR HIGHER PRESSURES, CALL THE LEEMCO FACTORY.
2. EACH FITTING AND VALVE BELL MUST BE RESTRAINED TO THE LENGTH OF PIPE NOTED IN THE TABLE USING FITTING TO PIPE RESTRAINT, VALVE TO PIPE RESTRAINT, AND PIPE TO PIPE RESTRAINT AS REQUIRED.
3. PIPE JOINTS WITHIN THE RESTRAINED LENGTH REQUIREMENT MUST BE RESTRAINED WITH PIPE TO PIPE RESTRAINTS.
4. SERVICE TEES AND COUPLINGS WITHIN THE RESTRAINED LENGTH REQUIREMENT MUST BE RESTRAINED WITH FITTING TO PIPE RESTRAINTS.
5. CONTACT TONY GARNER @ (208) 631-7787, THE LEEMCO REPRESENTATIVE, FOR ALL QUESTIONS CONCERNING LEEMCO PRODUCTS. COORDINATE AN INSTALLATION CLINIC WITH TONY GARNER PRIOR TO INSTALLING THE MAINLINE.

LEEMCO FITTINGS/JOINT RESTRAINTS - 2" + MAIN

Rev. 08/21/17

3

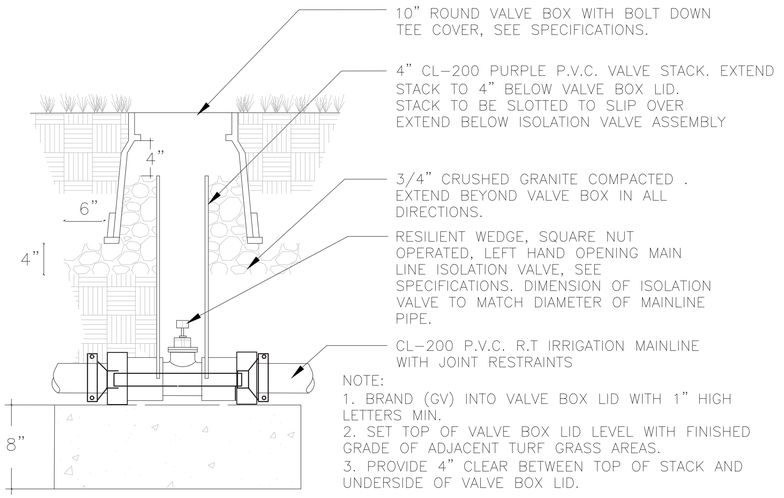

NOTE:
1. BRAND (GV) INTO VALVE BOX LID WITH 1" HIGH LETTERS MIN.
2. SET TOP OF VALVE BOX LID LEVEL WITH FINISHED GRADE OF ADJACENT TURF GRASS AREAS.
3. PROVIDE 4" CLEAR BETWEEN TOP OF STACK AND UNDERSIDE OF VALVE BOX LID.

GATE VALVE 2.5" + LARGER

Rev. 07/15/10

12

REFER TO SHEET

IR-1	IRRIG. SCHEDULE AND NOTES
IR-2	IRRIGATION HYDROZONE PLAN
IR-3	IRRIGATION CHARTS
IR-4	IRRIGATION PLAN
IR-5 - IR-11	IRRIGATION DETAILS

1

811 Know what's below. Call before you dig.
CALL 3 BUSINESS DAYS IN ADVANCE BEFORE YOU DIG, GRADE, OR EXCAVATE FOR THE MARKING OF UNDERGROUND MEMBER UTILITIES.

wenk
ASSOCIATES
PLANNERS & LANDSCAPE ARCHITECTS
303.628.0003

DENVER
THE MILE HIGH CITY

RIVER NORTH PARK
DENVER, COLORADO

FOR AND ON BEHALF OF WENK ASSOCIATES
NOT VALID WITHOUT ORIGINAL SIGNATURE

KEY PLAN:

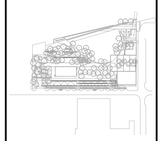

REVISIONS:

NAME	DATE
ADDENDUM #1 - IRRIG. REV.	01-22-19

DRAWN BY: KJD
REVIEWED BY: JSB
PROJECT NUMBER: 15014
DATE: **NOVEMBER 2018**
ISSUE: BID SET
SHEET TITLE: IRRIGATION DETAILS
SHEET NUMBER: **IR-5**

HydroSystems-KDI, Inc. Irrigation Consulting
860 Tabor Street Suite 200
Lakewood, Colorado 80401
303-980-5327
(fax) 303-980-5384

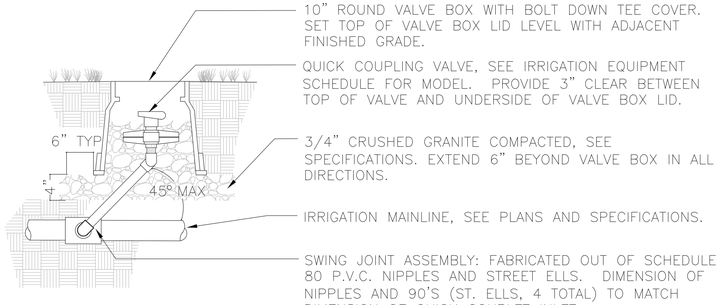

NOTE:
1. INSURE THAT HANDLE ON QUICK COUPLER KEY WILL CLEAR VALVE BOX IN ALL DIRECTIONS.
2. BRAND (QC) INTO VALVE BOX LID WITH 1" HIGH LETTERS MIN.
3. NIPPLE ANGLE TO BE 10 DEGREES MIN. AND 45 DEGREES MAX. INSTALL SWING JOINT SUCH THAT DOWNWARD PRESSURE ON VALVE WILL TIGHTEN FITTING INTO MAINLINE TEE.
4. FOR QUICK COUPLERS LOCATED WITHIN 100 FEET OF BACKFLOW PREVENTION DEVICES AND INTENDED FOR WINTERIZATION USE, ALL FITTINGS AND NIPPLES OF THE SWING JOINT ASSEMBLY MUST BE CONSTRUCTED ENTIRELY OF BRASS.

QUICK COUPLER

Rev. 07/15/10

5

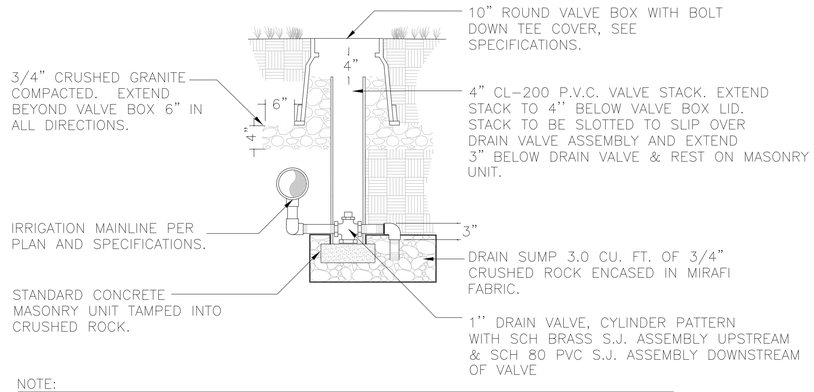

NOTE:
1. BRAND (DV) INTO VALVE BOX LID WITH 1" HIGH LETTERS MIN.
2. EXTEND VERTICAL DISCHARGE NIPPLE INTO DRAIN SUMP A MINIMUM OF 3".
3. SET TOP OF VALVE BOX LID LEVEL WITH FINISHED GRADE OF ADJACENT TURFGRASS AREAS.

DRAIN VALVE

Rev. 07/15/10

6

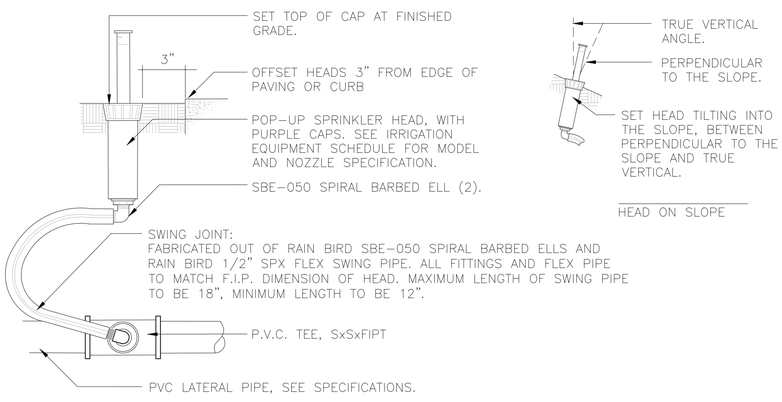

NOTE:
1. PLUMB HEAD PERPENDICULAR TO FINISHED GRADE OR AS SPECIFIED FOR HEADS ON A SLOPE.
2. SET TOP OF HEAD LEVEL WITH FINISHED GRADE IN TURF GRASS AREAS. SET TOP OF HEAD 1/2" ABOVE FINISHED GRADE IN SEEDED AREAS.
3. LATERAL PIPE TO BE PLACED 9" MIN FROM EDGE OF CURB/WALKS AND 36" MIN FROM THE CENTERLINE OF SWALES.

POP-UP SPRAY

Rev. 07/15/10

7

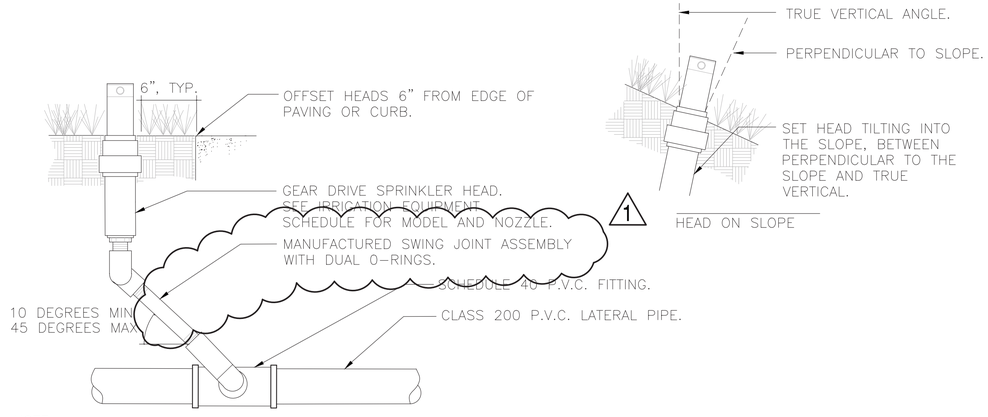

NOTE:
1. PLUMB HEAD PERPENDICULAR TO FINISHED GRADE OR AS SPECIFIED FOR HEADS ON SLOPE.
2. SET CAP OF HEAD LEVEL WITH FINISHED GRADE TURFGRASS AREAS. SET TOP OF HEAD 1/2" ABOVE FINISHED GRADE IN SEEDED AREAS.

GEAR DRIVE ROTOR

8

REFER TO SHEET

IR-1	IRRIG. SCHEDULE AND NOTES
IR-2	IRRIGATION HYDROZONE PLAN
IR-3	IRRIGATION CHARTS
IR-4	IRRIGATION PLAN
IR-5 - IR-11	IRRIGATION DETAILS

1

811 Know what's below. Call before you dig.
CALL 3 BUSINESS DAYS IN ADVANCE BEFORE YOU DIG, GRADE, OR EXCAVATE FOR THE MARKING OF UNDERGROUND MEMBER UTILITIES.

wenk
ASSOCIATES
PLANNERS & LANDSCAPE ARCHITECTS
303.628.0003

DENVER
THE MILE HIGH CITY

RIVER NORTH PARK
DENVER, COLORADO

FOR AND ON BEHALF OF WENK ASSOCIATES
NOT VALID WITHOUT ORIGINAL SIGNATURE

KEY PLAN:

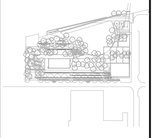

REVISIONS:

NAME	DATE
ADDENDUM #1 - IRRIG. REV.	01-22-19

DRAWN BY:
KJD

REVIEWED BY:
JSB

PROJECT NUMBER:
15014

DATE:
NOVEMBER 2018

ISSUE:
BID SET

SHEET TITLE:
IRRIGATION DETAILS

SHEET NUMBER:
IR-6

011099
HydroSystems-KDI, Inc. Irrigation Consulting
860 Tabor Street Suite 200
Lakewood, Colorado 80401
303-980-5327
(fax) 303-980-5384

Know what's below. Call before you dig.
CALL 3 BUSINESS DAYS IN ADVANCE BEFORE YOU DIG, GRADE, OR EXCAVATE FOR THE MARKING OF UNDERGROUND MEMBER UTILITIES.

NOTE:
* CONCRETE PAD PENETRATIONS TO BE 1" LARGER THAN TUBING DIAMETER
* REFER TO ENCLOSURE DETAIL FOR CONCRETE PAD DIMENSIONS
* DIAMETER OF FITTINGS AND TUBING SHALL EQUAL DIAMETER BACKFLOW PREVENTER UNLESS NOTED OTHERWISE

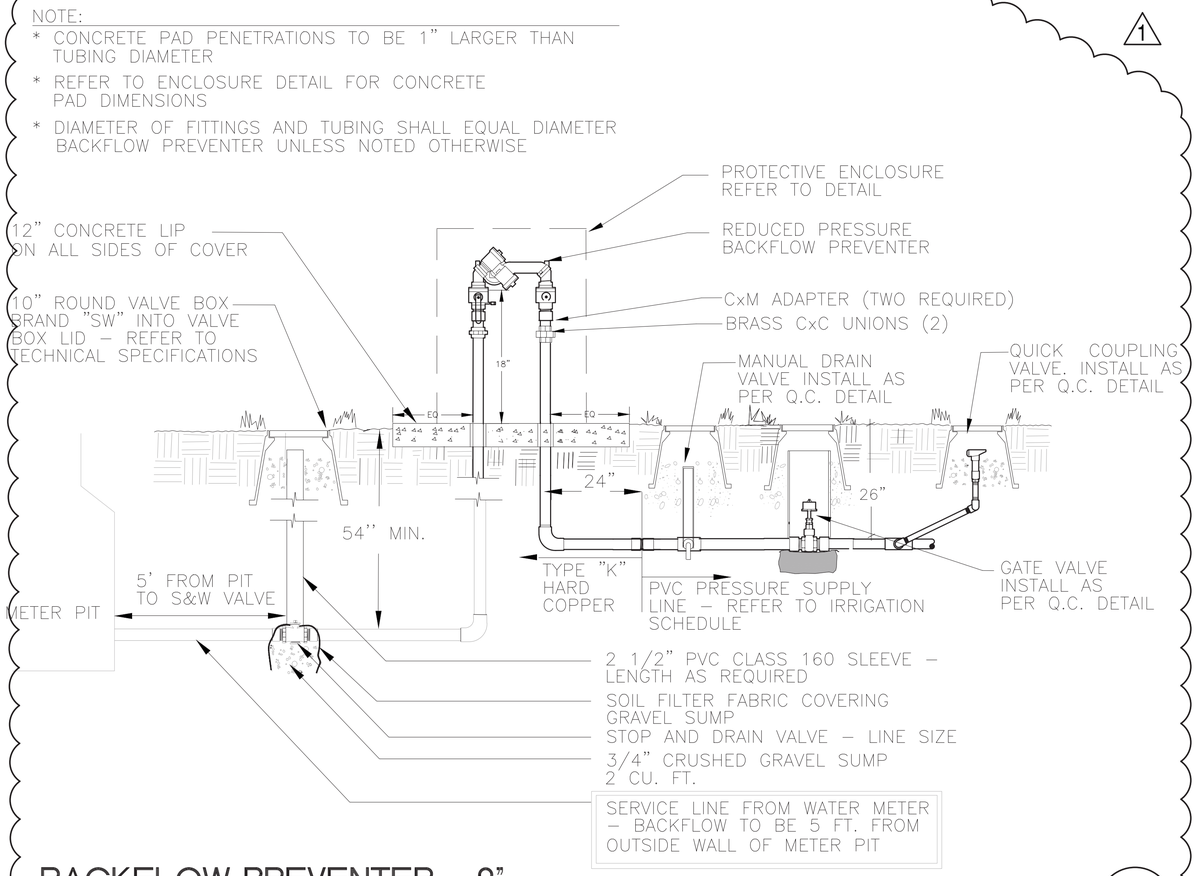

BACKFLOW PREVENTER - 2"

Rev. 09/21/18

9

BFP MODEL/SIZE	ENCLOSURE MODEL	W	H	L
FEBCO 825YA – 1.5" & 2"	GS–M1	16"	37"	18"

NOTE: CONTRACTOR TO USE LOCKSHIELD BRACKETS BY BPDI

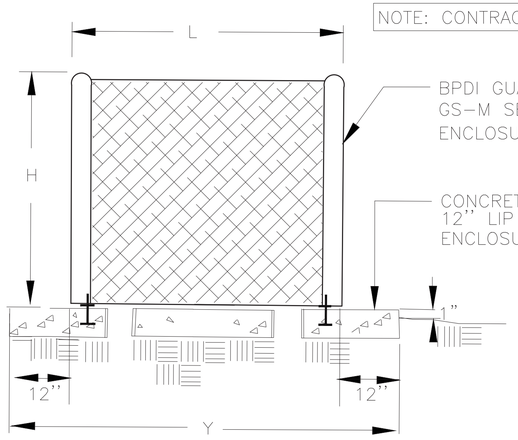

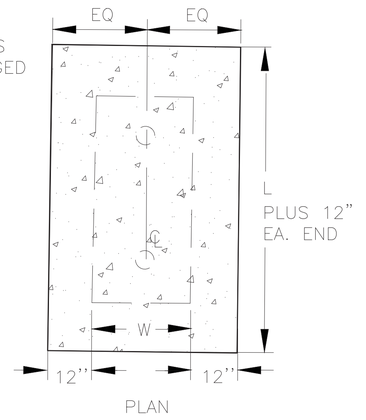

PLAN

NOTE:
* INSTALL ENCLOSURE ANCHORS AS PER MANUFACTURER'S RECOMMENDATIONS.
* PROVIDE OWNER WITH KEYED PADLOCK FOR ENCLOSURE
* PROVIDE ENCLOSURE WITH STANDARD DARK GREEN POWDER COATED FINISH
* PAD PENETRATIONS FOR BACKFLOW PREVENTER RISERS TO BE 1" LARGER THAN RISER DIAMETER.
* TOP SURFACE OF CONCRETE PAD SHALL BE 1" ABOVE FINISH GRADE
* PER DENVER WATER REQUIREMENTS, INSTALL ON THE BFP ENCLOSURE, IN A PERMANENT MANNER, THE ADDRESS FOR THE METER IN TEXT THAT IS 2" TALL. COORDINATE GETTING THE METER ADDRESS WITH THE PROJECT MANAGER.

BACKFLOW ENCLOSURE

Rev. 09/21/18

10

REFER TO SHEET

IR-1	IRRIG. SCHEDULE AND NOTES
IR-2	IRRIGATION HYDROZONE PLAN
IR-3	IRRIGATION CHARTS
IR-4	IRRIGATION PLAN
IR-5 - IR-11	IRRIGATION DETAILS

1

HydroSystems-KDI, Inc. Irrigation Consulting
860 Tabor Street Suite 200
Lakewood, Colorado 80401
303-980-5327
(fax) 303-980-5384

wenk
ASSOCIATES
PLANNERS & LANDSCAPE ARCHITECTS
303.628.0003

DENVER
THE MILE HIGH CITY

RIVER NORTH PARK
DENVER, COLORADO

FOR AND ON BEHALF OF WENK ASSOCIATES
NOT VALID WITHOUT ORIGINAL SIGNATURE

KEY PLAN:

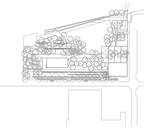

REVISIONS:

NAME	DATE
ADDENDUM #1 - IRRIG. REV.	01-22-19

DRAWN BY: KJD
REVIEWED BY: JSB
PROJECT NUMBER: 15014
DATE: **NOVEMBER 2018**
ISSUE: BID SET
SHEET TITLE: IRRIGATION DETAILS
SHEET NUMBER: IR-7

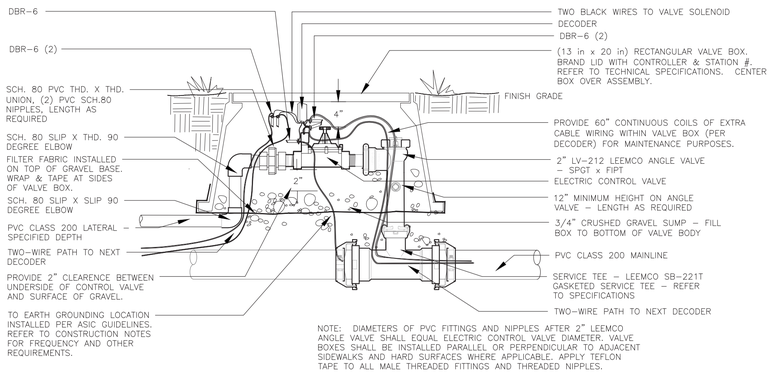

NOTE: DIAMETERS OF PVC FITTINGS AND NIPPLES AFTER 2" LEEMCO ANGLE VALVE SHALL EQUAL ELECTRIC CONTROL VALVE DIAMETER. VALVE BOXES SHALL BE INSTALLED PARALLEL OR PERPENDICULAR TO ADJACENT SIDEWALKS AND HARD SURFACES WHERE APPLICABLE. APPLY TEFLON TAPE TO ALL MALE THREADED FITTINGS AND THREADED NIPPLES.

SINGLE ELECTRIC CONTROL VALVE
TWO WIRE SYSTEM

11

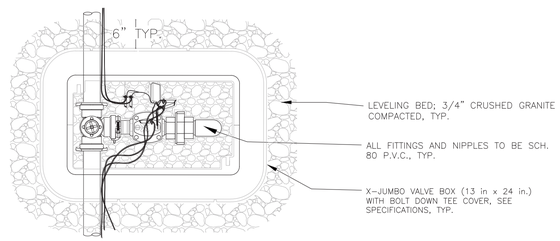

SINGLE VALVE MANIFOLD (TYP.)

NOTE:
1. ONE CONTROL VALVE PER BOX.
2. CENTER CONTROL VALVE ASSEMBLY IN BOX. ENSURE THAT LATERAL PIPE HAS 3" OF COVER MINIMUM WHERE IT PASSES UNDER VALVE BOX FRAME.
3. DO NOT MODIFY OR CUT SIDE WALLS OF VALVE BOX.
4. ASSEMBLE CONTROL VALVE ASSEMBLY FOR REVIEW AND APPROVAL PRIOR TO FABRICATION AND INSTALLATION.
5. LOCATE VALVE BOXES AND MAINLINE A MINIMUM DISTANCE OF 24" FROM CURBS AND WALKS AND A MINIMUM OF 36" FROM CENTER LINE OF DRAINAGE SWALES.

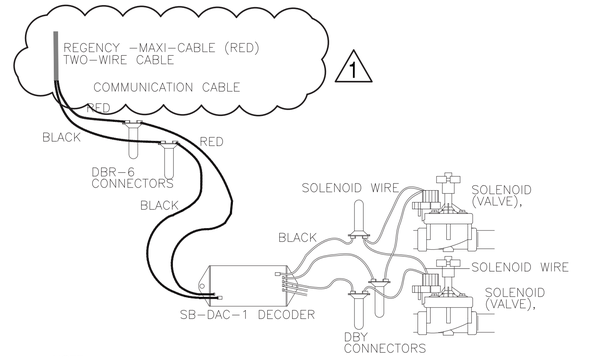

NOTE:
MAXIMUM LENGTH OF SECONDARY WIRE PATH (14 AWG) FROM DECODER TO SOLENOID IS 50 FEET.

DECODER WIRING DIAGRAM

Revised 05/21/10

12

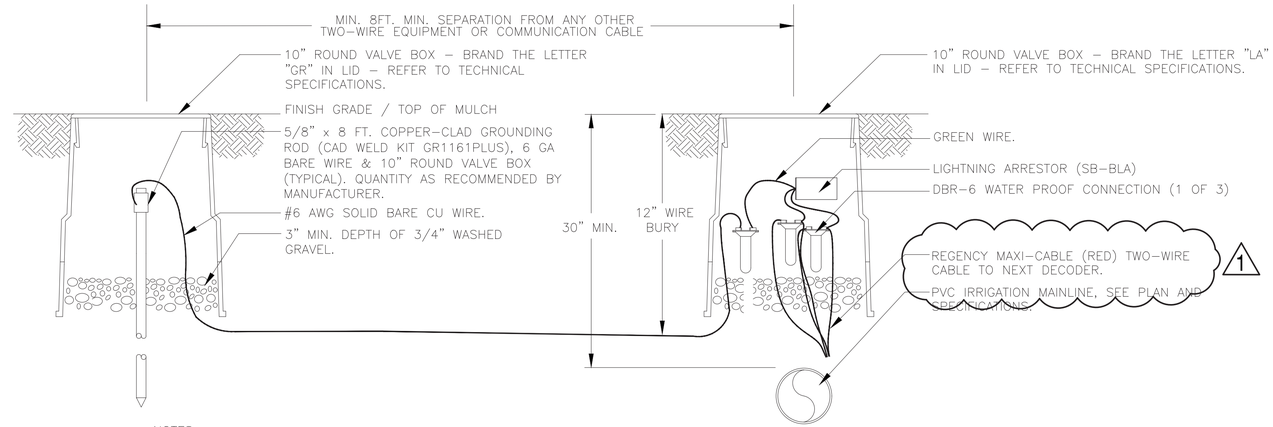

NOTES:
1. BL–LA01 LIGHTNING ARRESTORS SHOULD BE INSTALLED EVERY 600–FEET ON THE TWO–WIRE PATH.
2. BL–LA01 LIGHTNING ARRESTORS TO BE INSTALLED AT END OF WIRE RUN THAT TERMINATES IN THE FIELD (STAR CONFIGURATION).

TWO-WIRE GROUNDING DIAGRAM

Revised 05/21/10

13

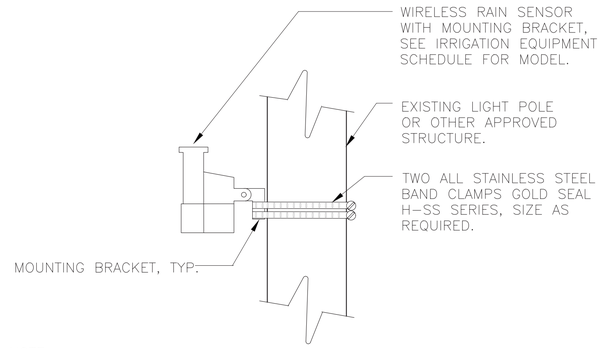

NOTE:
1. MOUNT TO POLE OR LIGHT POLE WITHIN 200 FEET OF CONTROLLER.
2. INSTALL A MINIMUM OF 15' ABOVE GRADE.
3. ENSURE SENSOR IS NOT SHIELDED BY TREE CANOPIES OR STRUCTURES AND NOT AFFECTED BY IRRIGATION OVERSPRAY.

RAIN SENSOR

14

REFER TO SHEET

IR-1	IRRIG. SCHEDULE AND NOTES
IR-2	IRRIGATION HYDROZONE PLAN
IR-3	IRRIGATION CHARTS
IR-4	IRRIGATION PLAN
IR-5 - IR-11	IRRIGATION DETAILS

1

811 Know what's below. Call before you dig.
CALL 3 BUSINESS DAYS IN ADVANCE BEFORE YOU DIG, GRADE, OR EXCAVATE FOR THE MARKING OF UNDERGROUND MEMBER UTILITIES.

wenk
ASSOCIATES
PLANNERS & LANDSCAPE ARCHITECTS
303.628.0003

DENVER
THE MILE HIGH CITY

RIVER NORTH PARK
DENVER, COLORADO

FOR AND ON BEHALF OF WENK ASSOCIATES
NOT VALID WITHOUT ORIGINAL SIGNATURE

KEY PLAN:

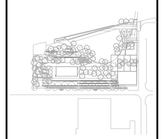

REVISIONS:

NAME	DATE
ADDENDUM #1 - IRRIG. REV.	01-22-19

DRAWN BY: KJD
REVIEWED BY: JSB
PROJECT NUMBER: 15014
DATE: **NOVEMBER 2018**
ISSUE: BID SET
SHEET TITLE: IRRIGATION DETAILS
SHEET NUMBER: IR-8

HydroSystems-KDI, Inc. Irrigation Consulting
860 Tabor Street Suite 200
Lakewood, Colorado 80401
303-980-5327
(fax) 303-980-5384

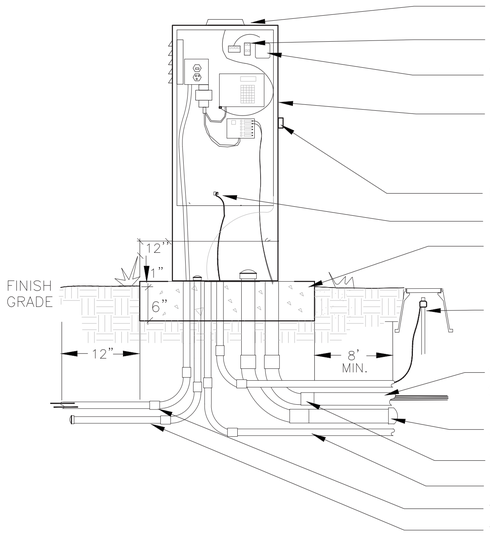

LOW PROFILE ANTENNA W/ CABLE – ONE PER CONTROLLER UNIT

TERMINALS FOR MASTER VALVE, FLOW SENSOR, RAIN SENSOR

WIRELESS RAIN SENSOR MODULE, SEE SPECIFICATIONS

FIELD CONTROLLER & CUSTOM BUILT ENCLOSURE – DARK GREEN POWDER COATED FINSIH COLOR TIGER DRYLACK 6005– SEE PLAN SHEETS FOR MODEL NUMBER OF ENCLOSURE AND CONTROLLER–INSTALL LEVEL & PLUMB. MOUNT PEDESTAL TO CONCRETE BASE VIA 1/2" DIA. THREADED "J" BOLTS WITH 1/2" FENDER WASHERS & NUTS.

HEAVY DUTY LOCKING HASP WITH KEYED PADLOCK, COORDINATE KEY # W/ PARKS DEPARTMENT

GROUND WIRE CRIMPED TO GROUNDING LUG

CONCRETE PAD – 6'' THICK (SEE CONCRETE SPECIFICATIONS) AND EXTENDING 12'' IN ALL DIRECTIONS AROUND THE CONTROLLER ENCLOSURE. INSTALL SLAB 1" ABOVE ADJACENT FINISHED GRADE. SEE PLAN VIEW DETAIL.

5/8" x 8 FT. COPPER–CLAD GROUNDING ROD (CAD WELD KIT GR1161PLUS), 6 GA BARE WIRE & 10" ROUND VALVE BOX (TYPICAL). QUANTITY AS RECOMMENDED BY MANUFACTURER.

SWEEP ELL – CONTROL WIRING (3" DIA – 1–80 CONTROL WIRES, 4" – 81–144 CONTROL WIRES) CONDUITS SHALL BE INSTALLED IN SEPARATE TRENCHES (ONE PER CONTROLLER UNIT)

3" SPARE SWEEP ELL (CAP SLEEVE PIPE) (1)

1" SWEEP ELL – GROUND WIRE (1)

1" SWEEP ELL – MASTER VALVE AND FLOW SENSOR WIRES (1)

1" SWEEP ELL – 120v ELECTRICAL SERVICE (1)

1" SPARE SWEEP ELL – (CAP SLEEVE PIPE) (1)

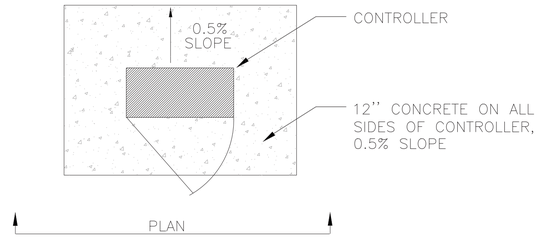

GENERAL NOTES AND REQUIRMENTS

1. 450 MHz RADIO COMMUNICATION SYSTEM SHALL BE FULLY COMPATIBLE WITH EXISTING DENVER DEPARTMENT OF PARKS AND RECREATION CENTRAL CONTROL UNIT RADIO FREQUENCY.
2. FLOW SENSOR SHIELDED CABLE (PAIGE 7171D–A) SHALL BE CONNECTED TO FLOW SENSOR TERMINAL AT TOP OF CONTROLLER.
3. MASTER VALVE WIRE SHALL BE CONNECTED TO THE MASTER VALVE TERMINAL AT THE TOP OF THE CONTROLLER.
4. ALL WIRE CONDUITS SHALL BE SCH. 40 PVC CONDUIT AND SHALL EXTEND A MINIMUM OF 12" BEYOND THE CONCRETE SLAB AND CUT FLUSH WITH CONCRETE PAD.
5. CONTRACTOR SHALL PROVIDE 48'' LENGTH OF SPARE WIRES WITHIN ENCLOSURE. NEATLY COIL WIRES AT BASE OF ENCLOSURE. BUNDLE AND LABEL WIRES ACCORDING TO CONTROLLER DESIGNATION SHOWN ON PLANS.
6. LOCATE CONTROLLER ENCLOSURE SO THAT IRRIGATION HEADS DO NOT SPRAY INTO CABINET.
7. CONTRACTOR SHALL ARRANGE AND PAY FOR A SITE SURVEY FOR ANTENNA SET–UP FOR MAXIMUM SIGNAL QUALITY FOR EACH CONTROLLER SITE AND OPTIMIZATION OF CENTRAL CONTROL COMMUNICATION AFTER INSTALLATION. SURVEY TO BE CONDUCTED PRIOR TO CONSTRUCTION AND ORDERING OF EQUIPMENT AND IN SUMMER TIME DURING FULL TREE LEAF OUT.

ELECTRICAL AND GROUNDING NOTES:

1. CONTRACTOR TO GROUND AND PROVIDE SURGE PROTECTION FOR FIELD UNIT IN ACCORDANCE WITH MANUFACTURER'S RECOMMENDATIONS AND GROUND ROD(S) SHOWN. 6 GA. (MIN) BARE COPPER GROUND WIRE SHALL BE CONNECTED AND CRIMPED TO STUDS ON THE BACKSIDE OF THE PANEL.
2. CONTROLLER(S) SHALL BE EARTH GROUND TESTED VIA MEGGER WITH ACCEPTABLE GROUND RESISTANCE OF 10 OHMS OR LESS. CONTRACTOR SHALL PERFORM GROUNDING TEST IN PRESENCE OF DENVER PARKS & RECREATION REPRESENTATIVE OR CONSULTANT.
3. EARTH GROUND MUST BE IN ACCORDANCE WITH ARTICLE 250 OF THE NATIONAL ELECTRICAL CODE (NEC).
4. ALL ELECTRICAL WORK TO CONFORM TO LOCAL AND STATE CODES.

CONTOLLER - SINGLE DOOR

Rev. 5/2/13

15

REFER TO SHEET

IR-1	IRRIG. SCHEDULE AND NOTES
IR-2	IRRIGATION HYDROZONE PLAN
IR-3	IRRIGATION CHARTS
IR-4	IRRIGATION PLAN
IR-5 - IR-11	IRRIGATION DETAILS

1

Know what's below. Call before you dig.
CALL 3 BUSINESS DAYS IN ADVANCE BEFORE YOU DIG, GRADE, OR EXCAVATE FOR THE MARKING OF UNDERGROUND MEMBER UTILITIES.

wenk
ASSOCIATES
PLANNERS & LANDSCAPE ARCHITECTS
303.628.0003

DENVER
THE MILE HIGH CITY

RIVER NORTH PARK
DENVER, COLORADO

FOR AND ON BEHALF OF WENK ASSOCIATES
NOT VALID WITHOUT ORIGINAL SIGNATURE

KEY PLAN:

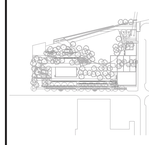

REVISIONS:

NAME	DATE
ADDENDUM #1 - IRRIG. REV.	01-22-19

DRAWN BY: KJD

REVIEWED BY: JSB

PROJECT NUMBER: 15014

DATE: **NOVEMBER 2018**

ISSUE: BID SET

SHEET TITLE: IRRIGATION DETAILS

SHEET NUMBER: IR-9

011099

HydroSystems-KDI, Inc. Irrigation Consulting
860 Tabor Street Suite 200
Lakewood, Colorado 80401
303-980-5327
(fax) 303-980-5384

811
Know what's below.
Call before you dig.
CALL 3 BUSINESS DAYS IN ADVANCE BEFORE YOU DIG, GRADE, OR EXCAVATE FOR THE MARKING OF UNDERGROUND MEMBER UTILITIES.

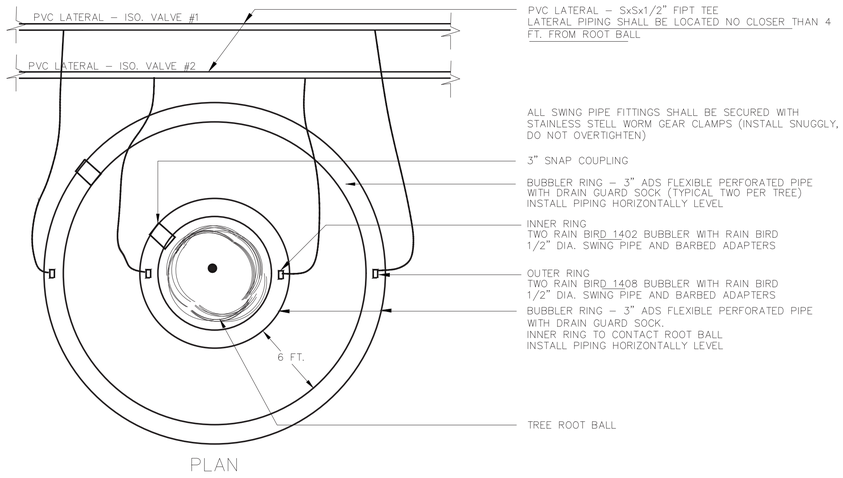

PLAN

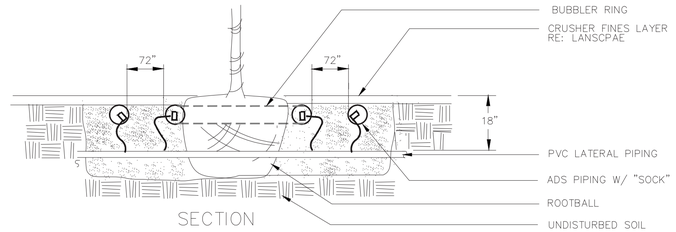

SECTION

NOTE:
ALL PERFORATED PIPE SHALL BE INSTALLED LEVEL
SECURE ALL ADS COUPLINGS AND BUBBLERS WITH FABRIC–REINFORCED ADHESIVE TAPE

OPERATION RECOMMENDATIONS: IRRIGATE NEW TREE WITH INNER RING DURING FIRST TWO GROWING SEASONS. ACTIVATE OUTER RINGS (IN ADDITION TO INNER RINGS) FOR GROWING SEASON NO. 3 AND BEYOND

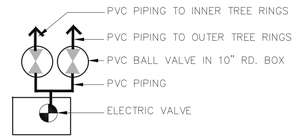

INSTALL ONE CHRISTY'S VALVE MARKER TAG ON EA. BALL VALVE. MARK INNER RING VALVWE AS "INNER" AND OUTER RING AS "OUTER". USE INDELIBLE INK

BUBBLER VALVE CONFIGURATION

TREE BUBBLER RINGS

16

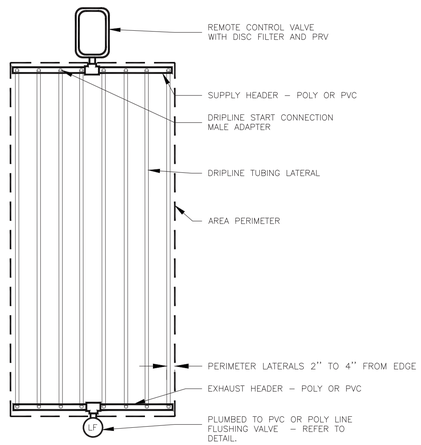

SUBSURFACE DRIP - TOP VIEW

END FEED LAYOUT - TYPICAL

17

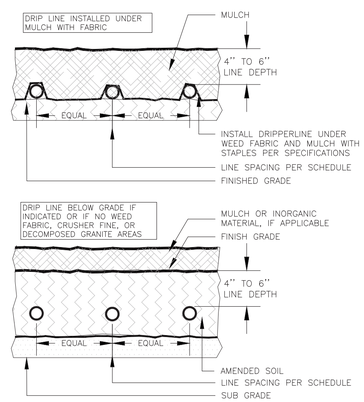

SUBSURFACE DRIP

HORIZONTAL VIEW - Bed

18

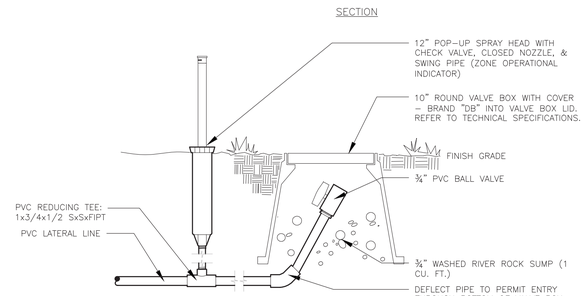

DRIP INDICATOR AND FLUSH VALVE

19

REFER TO SHEET

IR-1	IRRIG. SCHEDULE AND NOTES
IR-2	IRRIGATION HYDROZONE PLAN
IR-3	IRRIGATION CHARTS
IR-4	IRRIGATION PLAN
IR-5 - IR-11	IRRIGATION DETAILS

1

HydroSystems-KDI, Inc.
Irrigation Consulting
860 Tabor Street Suite 200
Lakewood, Colorado 80401
303-980-5327
(fax) 303-980-5384

wenk
ASSOCIATES
PLANNERS & LANDSCAPE ARCHITECTS
303.628.0003

DENVER
THE MILE HIGH CITY

RIVER NORTH PARK
DENVER, COLORADO

FOR AND ON BEHALF OF WENK ASSOCIATES
NOT VALID WITHOUT ORIGINAL SIGNATURE

KEY PLAN:

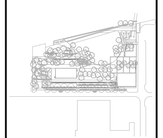

REVISIONS:

NAME	DATE
ADDENDUM #1 - IRRIG. REV.	01-22-19

DRAWN BY:
KJD

REVIEWED BY:
JSB

PROJECT NUMBER:
15014

DATE:
NOVEMBER 2018

ISSUE:
BID SET

SHEET TITLE:
IRRIGATION DETAILS

SHEET NUMBER:
IR-10

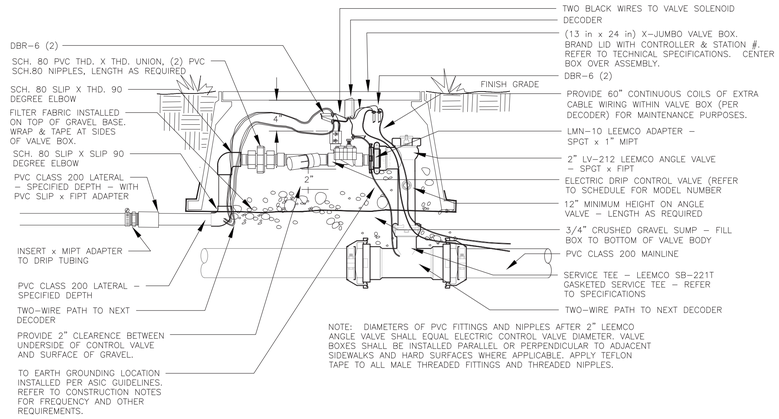

NOTE: DIAMETERS OF PVC FITTINGS AND NIPPLES AFTER 2" LEEMCO ANGLE VALVE SHALL EQUAL ELECTRIC CONTROL VALVE DIAMETER. VALVE BOXES SHALL BE INSTALLED PARALLEL OR PERPENDICULAR TO ADJACENT SIDEWALKS AND HARD SURFACES WHERE APPLICABLE. APPLY TEFLON TAPE TO ALL MALE THREADED FITTINGS AND THREADED NIPPLES.

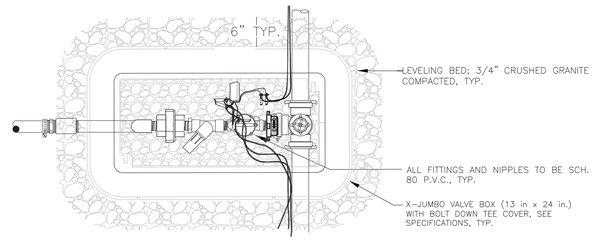

SINGLE VALVE MANIFOLD (TYP.)

1

NOTE:
1. ONE CONTROL VALVE PER BOX.
2. CENTER CONTROL VALVE ASSEMBLY IN BOX. ENSURE THAT LATERAL PIPE HAS 3" OF COVER MINIMUM WHERE IT PASSES UNDER VALVE BOX FRAME.
3. DO NOT MODIFY OR CUT SIDE WALLS OF VALVE BOX.
4. ASSEMBLE CONTROL VALVE ASSEMBLY FOR REVIEW AND APPROVAL PRIOR TO FABRICATION AND INSTALLATION.
5. LOCATE VALVE BOXES AND MAINLINE A MINIMUM DISTANCE OF 24" FROM CURBS AND WALKS AND A MINIMUM OF 36" FROM CENTER LINE OF DRAINAGE SWALES.

SINGLE DRIP ELECTRIC CONTROL VALVE
TWO WIRE SYSTEM

20

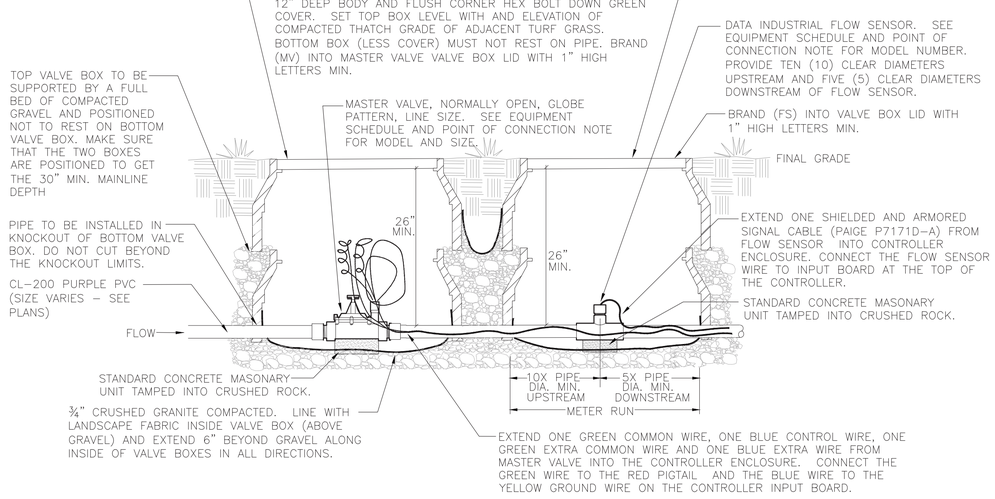

MASTER VALVE/FLOW SENSOR

Rev. 06/09/10

21

REFER TO SHEET

IR-1	IRRIG. SCHEDULE AND NOTES
IR-2	IRRIGATION HYDROZONE PLAN
IR-3	IRRIGATION CHARTS
IR-4	IRRIGATION PLAN
IR-5 - IR-11	IRRIGATION DETAILS

1

Know what's below. Call before you dig.
CALL 3 BUSINESS DAYS IN ADVANCE BEFORE YOU DIG, GRADE, OR EXCAVATE FOR THE MARKING OF UNDERGROUND MEMBER UTILITIES.

wenk
ASSOCIATES
PLANNERS & LANDSCAPE ARCHITECTS
303.628.0003

DENVER
THE MILE HIGH CITY

RIVER NORTH PARK
DENVER, COLORADO

FOR AND ON BEHALF OF WENK ASSOCIATES
NOT VALID WITHOUT ORIGINAL SIGNATURE

KEY PLAN:

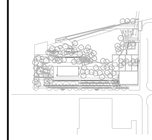

REVISIONS:

NAME	DATE
ADDENDUM #1 - IRRIG. REV.	01-22-19

DRAWN BY: KJD
REVIEWED BY: JSB
PROJECT NUMBER: 15014
DATE: **NOVEMBER 2018**
ISSUE: BID SET
SHEET TITLE: IRRIGATION DETAILS
SHEET NUMBER: IR-11

HydroSystems-KDI, Inc. Irrigation Consulting
860 Tabor Street Suite 200
Lakewood, Colorado 80401
303-980-5327
(fax) 303-980-5384

RIVER NORTH PARK

BID SET - ADDENDUM 2 REVISIONS

JANUARY 2019

WENK PROJECT NO. 15014.00 DPW PROJECT CONTROL NO. 2016-PROJMSTR-00000124

NORTHEAST QUARTER OF SECTION 27, TOWNSHIP 3 SOUTH, RANGE 68 WEST OF THE SIXTH PRINCIPAL MERIDIAN

SHEET INDEX

COVER SHEETS

CV1.0	GENERAL NOTES

EXISTING CONDITIONS

EX1.1 - 1.2	EXISTING CONDITIONS

EROSION CONTROL

C3.1	EROSION CONTROL PLAN (INITIAL)
C3.2	EROSION CONTROL PLAN (INTERIM)
C3.3	EROSION CONTROL PLAN (FINAL)

DEMOLITION

DM1.1 - 1.2	DEMOLITION PLANS

GRADING/CIVIL

C2.0	NOTES
C2.1	OVERALL GRADING & UTILITY PLAN
C2.2-2.5	DETAILED GRADING PLANS

STORMWATER

C5.1-5.2	POND DETAILS
C5.3	STORM SEWER PLAN & PROFILE
C5.4	STORM SEWER DETAILS
C5.5	DRAINAGE MAP

UTILTIES

C6.0	WATER COVER SHEET
C6.1	WATER LINE NOTES & DETAILS
C6.2	WATER ONLY PLAN
C6.3	OVERALL UTILITY PLAN

LAYOUT & MATERIALS

L1.0	OVERALL LAYOUT PLAN & NOTES
L1.1 - L1.2	LAYOUT & MATERIALS PLANS
L1.3 - L1.4	SOILS & MULCHING PLANS
L3.0 - L3.1	LANDSCAPE SECTIONS
L4.1 - L4.15	LANDSCAPE DETAILS

PLANTING

PL1.0	PLANTING NOTES & PLANT SCHEDULE
PL1.1 - PL1.4	PLANTING PLANS
PL4.1 - PL4.2	PLANTING DETAILS

IRRIGATION

IR-1	IRRIGATION SCHEDULE AND NOTES
IR-2	IRRIGATION HYDROZONE PLAN
IR-3	IRRIGATION CHARTS
IR-4	IRRIGATION PLAN
IR-5 - IR-11	IRRIGATION DETAILS

LIGHTING & ELECTRICAL

LE0.0	COVER SHEET
LE1.1	SITE ELECTRICAL PLAN
LE2.1	SITE LIGHTING PLAN
LE4.0	ELECTRICAL ONE-LINE
LE5.0	ELECTRICAL DETAILS
LE6.0	ELECTRICAL SCHEDULES

FURNISHINGS & SITE ELEMENTS

F1-6	SITE FURNISHINGS & SITE ELEMENTS
F7-8	ELECTRICAL ENCLOSURES

VICINITY MAP

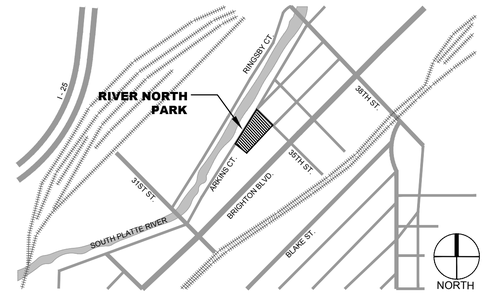

City and County of Denver
Parks and Recreation Department
Checked for General Compliance with applicable Denver Criteria, Rules, Regulations and Standards.

APPROVED (if validly signed)

Approved by: Director of Planning Date

(Note: Signature in Print)

APPROVED AS TO FORM.
DRAWINGS AND DESIGN ADEQUACY ARE ACCEPTED BASED UPON THE PROJECT LANDSCAPE ARCHITECT'S ATTACHED SEAL OF REGISTRATION.

(Project Landscape Architect's Professional Seal, Signature and Date)

CITY AND COUNTY OF DENVER DEPARTMENT OF PUBLIC WORKS

APPROVED BY:

EXECUTIVE DIRECTOR OF PUBLIC WORKS DATE

CITY ENGINEER DATE

DIRECTOR OF ENGINEERING CAPITAL PROJECTS DATE

CITY TRAFFIC ENGINEER DATE

Landscape Architect-Prime Consultant
Nicole Horst/Tyrel Sturgeon
Wenk Associates, Inc.
1130 31st Street, Suite 101
Denver, Colorado 80205
303.628.0003

Civil Engineering
Jay Peters
EES, Inc.
518 17th Street, Suite 1575
Denver, Colorado 80202
303.572.7997

Structural Engineering
Leslie Tyson
LT Engineering, LLC
5620 Zuni Street
Denver, Colorado 80221
303.477.3861

Irrigation
Ken DiPaolo
Hydosystems KDI, Inc.
860 Tabor Street, Suite 200
Lakewood, Colorado 80401
303.980.5327

Lighting & Electrical
Gregg Adams
BCER Engineering, Inc.
5420 Ward Rd, Suite 200
Arvada, CO 80002
303.463.7772

Geotechnical
Don Hunt
Rocksol Consulting Group, Inc.
6510 W. 91st Ave, Suite 130
Westminster, CO 80031
303.962.9300

Architecture/Art
Mike Moore / Jack Ricci
tres birds workshop
3821 Steele Street, Unit B
Denver, CO 80205
303.442.3790

Denver Parks & Rec Project Manager
Owen Snell - PM
City and County of Denver
720.913.0618

wenk ASSOCIATES PLANNERS & LANDSCAPE ARCHITECTS 303.628.0003

DENVER THE MILE HIGH CITY

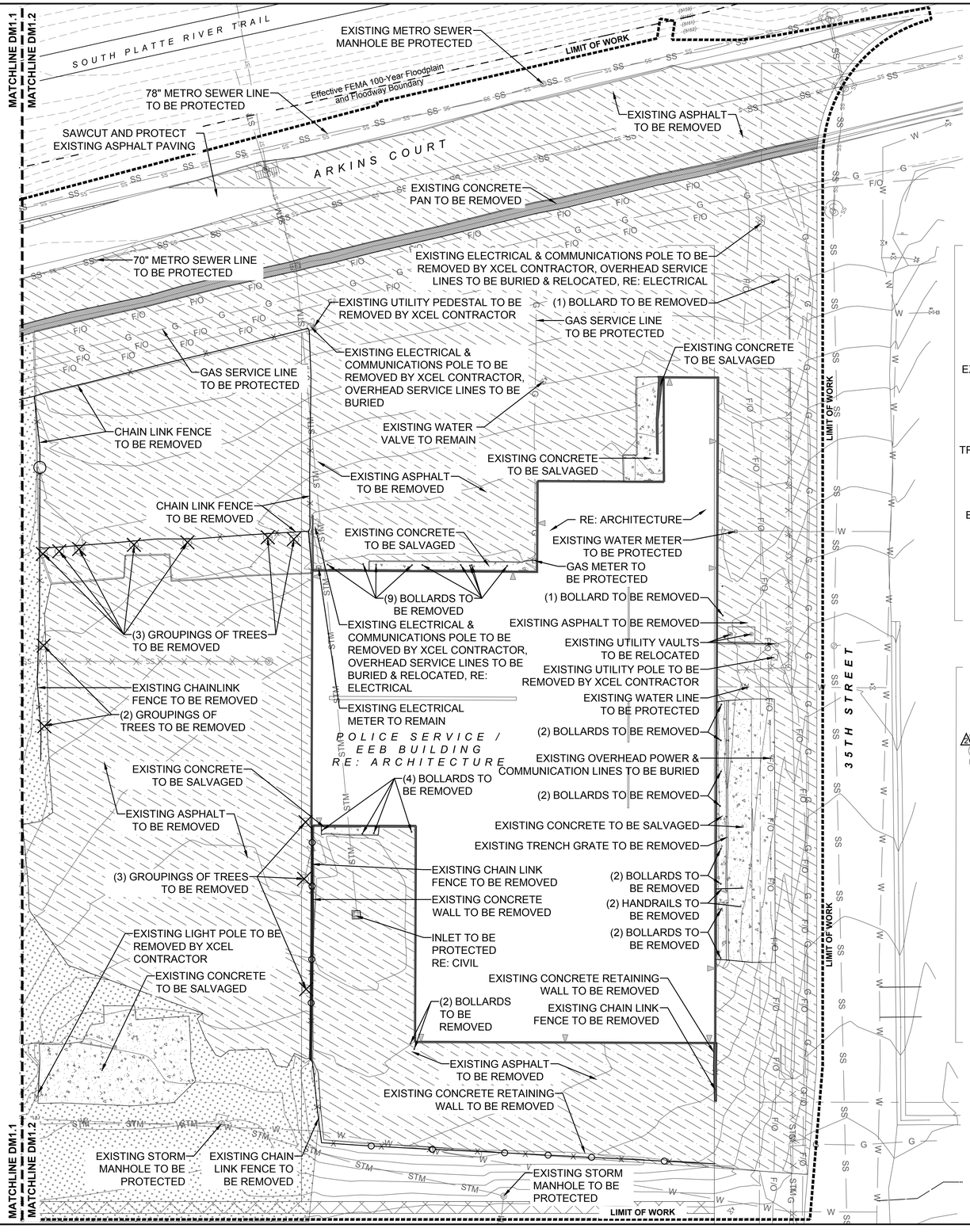

DEMO PLAN LEGEND

- ASPHALT TO BE REMOVED
- CONCRETE TO BE REMOVED-SEE NOTE
- CLEAR AND GRUB
- CONCRETE PAN TO BE REMOVED
- WALLS TO BE REMOVED
- FENCE TO BE REMOVED
- UTILITY POLE TO BE REMOVED-BY XCEL
- UTILITY PEDESTAL TO BE REMOVED-BY XCEL
- TREE TO BE REMOVED
- STRUCTURE TO BE REMOVED
- EFFECTIVE FEMA 100-YEAR FLOODPLAIN AND FLOODWAY BOUNDARY

NOTE: REFERENCE SPECIFICATIONS AND DETAIL 6/L4.1 FOR REMOVAL OF CONCRETE TO BE SALVAGED.

MAKER'S PLAZA- EEB FLOOR ENLARGEMENT

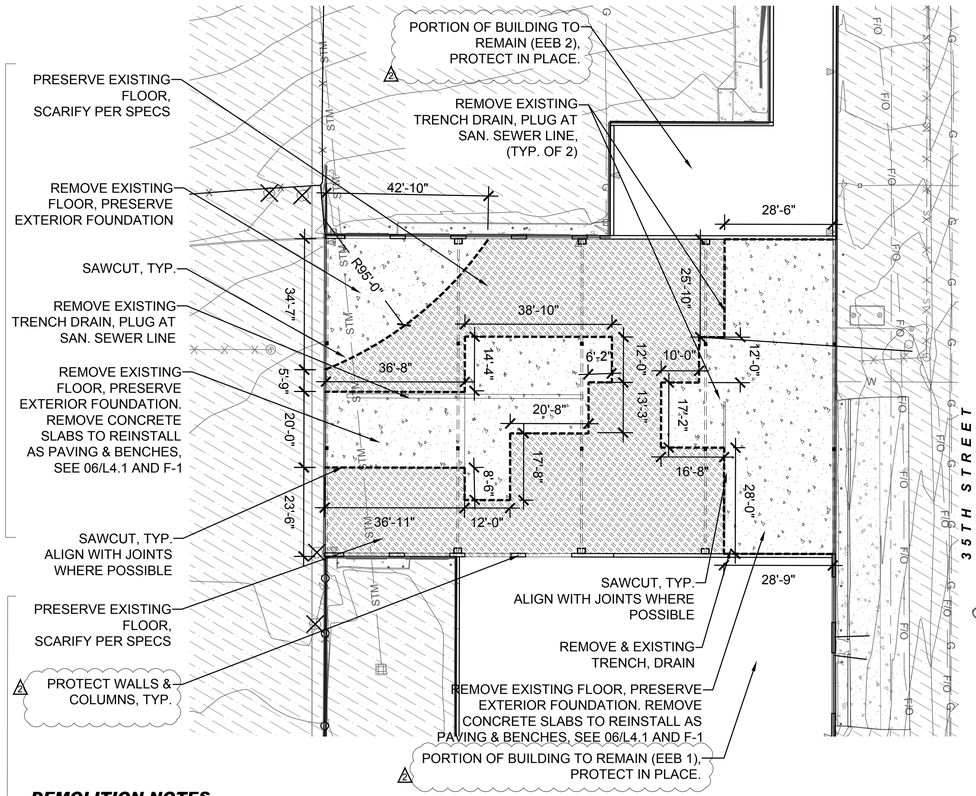

DEMOLITION NOTES

1. ALL ITEMS TO BE REMOVED AND NOT RESET SHALL BECOME THE PROPERTY OF THE CONTRACTOR AND SHALL BE REMOVED FROM THE SITE AND DISPOSED OF PROPERLY.
2. SIGNS AND / OR SIGNAL EQUIPMENT DESIGNATED AS REMOVAL ITEMS SHALL BE CAREFULLY REMOVED AND DELIVERED BY THE CONTRACTOR TO THE CITY YARD AT 5440 ROSLYN STREET, BUILDING E. ANY MATERIAL DESIGNATED FOR SALVAGE THAT IS DAMAGED AFTER REMOVAL SHALL BE REPAIRED OR REPLACED BY THE CONTRACTOR TO THE SATISFACTION OF THE ENGINEER. NO SEPARATE PAYMENT SHALL BE MADE FOR LOADING, HAULING, ULOADING, OR PLACING SALVAGED MATERIALS IN THE CITY YARD.
3. WHERE IT IS REQUIRED TO REMOVE EXISTING CONCRETE OR ASPHALT, CUTTING SHALL BE DONE TO A NEAT WORK LINE TO FULL DEPTH USING A SAW, CUTTING WHEEL, OR OTHER METHOD APPROVED BY THE PROJECT MANAGER. THIS WILL NOT BE PAID SEPARATELY, BUT SHALL BE INCLUDED IN THE WORK.
4. REMOVAL OF EXISTING CURB AND GUTTER, SIDEWALK, DRIVEWAYS, CURB CUTS, AND OTHER CONCRETE ITEMS THAT ARE ATTACHED OR ADJACENT TO OTHER CONCRETE ITEMS SHALL BE REMOVED TO THE NEAREST JOINT, AS NEEDED TO AVOID DAMAGING THE REMAINING CONCRETE ITEMS. THE CONTRACTOR SHALL BE RESPONSIBLE FOR DAMAGE TO ADJACENT SIDEWALK DURING CURB AND GUTTER REMOVAL AND SHALL REPLACE DAMAGED SECTIONS AT NO ADDITIONAL COST TO THE PROJECT.
5. THE CONTRACTOR IS REQUIRED TO RESET, ADJUST, OR REPLACE ANY UTILITIES, LANDSCAPING, SPRINKLER SYSTEMS, SIGNS, SIDEWALKS, ETC. THAT ARE IMPACTED BY CONSTRUCTION AND ARE NOT DESIGNATED TO BE REMOVED.
6. NO FILL OR STRUCTURES ARE ALLOWED IN THE FLOODWAY.
7. MODIFICATION OF ANY MWRD MANHOLE MUST BE IN ACCORDANCE WITH MWRD STANDARD SPECIFICATIONS AND THE STANDARD MANHOLE DETAIL. IF THE FINAL GRADE OF MWRD MANHOLE IS RAISED OF LOWERED FROM ITS CURRENT ELEVATION, IT SHALL CONFORM TO THE 18" MAXIMUM AND 10" MINIMUM DISTANCE FROM THE TOP OF THE CONE TO THE FINAL FINISHED GRADE AS SHOWN ON SAID DETAIL. IF THE REQUIRED FINAL GRADE IS GREATER THAN 18" OR LESS THAN 10" FROM THE EXISTING TOP OF CONE ELEVATION, THE CONE SHALL BE REMOVED, AND BARREL SECTIONS SHALL BE ADDED OR REMOVED TO COMPLY WITH STANDARD DETAIL. SHOULD ADDITIONAL STEPS BE REQUIRED DUE TO THE ADDITION OF BARREL SECTIONS, THEY SHALL BE ADDED AS REQUIRED.
8. GENERAL CONTRACTOR TO COORDINATE WITH XCEL CONTRACTOR FOR SCHEDULING SEQUENCING.

0 10 20 40

wenk
ASSOCIATES
PLANNERS & LANDSCAPE ARCHITECTS
303.628.0003

DENVER
THE MILE HIGH CITY

RIVER NORTH PARK
DENVER, COLORADO

NICOLE K. HORST
626
10/07/2008
Original Date of Licensure
STATE OF COLORADO
LICENSED LANDSCAPE ARCHITECT
FOR AND ON BEHALF OF WENK ASSOCIATES
NOT VALID WITHOUT ORIGINAL SIGNATURE

KEY PLAN:

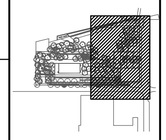

REVISIONS:

NAME	DATE
1 IRRIGATION REVISIONS	JAN. 2019
2 ADDENDUM 2 REVISIONS	JAN. 2019

DRAWN BY: BP/TS

REVIEWED BY: NH

PROJECT NUMBER: 15014

DATE: **OCTOBER 2018**

ISSUE: BID SET

SHEET TITLE: DEMOLITION PLAN

SHEET NUMBER: DM1.2

Table RECP-2. ECTC Standard Specification for Permanent[1] Rolled Erosion Control Products
(Adapted from: Erosion Control Technology Council 2005)

Product Type	Slope Applications	Channel Applications	
TRMs with a minimum thickness of 0.25 inches (6.35 mm) per ASTM D 6525 and UV stability of 80% per ASTM D 4355 (500 hours exposure).	Maximum Gradient	Maximum Shear Stress[4,5]	Minimum Tensile Strength[2,3]
	0.5:1 (H:V)	6.0 lbs/ft^2 (288 Pa)	125 lbs/ft (1.82 kN/m)
	0.5:1 (H:V)	8.0 lbs/ft^2 (384 Pa)	150 lbs/ft (2.19 kN/m)
	0.5:1 (H:V)	10.0 lbs/ft^2 (480 Pa)	175 lbs/ft (2.55 kN/m)

[1] For TRMs containing degradable components, all property values must be obtained on the non-degradable portion of the matting alone.

[2] Minimum Average Roll Values, machine direction only for tensile strength determination using ASTM D 6818 (Supersedes Mod. ASTM D 5035 for RECPs)

[3] Field conditions with high loading and/or high survivability requirements may warrant the use of a TRM with a tensile strength of 44 kN/m (3,000 lb/ft) or greater.

[4] Required minimum shear stress TRM (fully vegetated) can sustain without physical damage or excess erosion (> 12.7 mm (0.5 in.) soil loss) during a 30-minute flow event in large scale testing.

[5] Acceptable large-scale testing protocols may include ASTM D 6460, or other independent testing deemed acceptable by the engineer.

Design and Installation

RECPs should be installed according to manufacturer's specifications and guidelines. Regardless of the type of product used, it is important to ensure no gaps or voids exist under the material and that all corners of the material are secured using stakes and trenching. Continuous contact between the product and the soil is necessary to avoid failure. Never use metal stakes to secure temporary erosion control products. Often wooden stakes are used to anchor RECPs; however, wood stakes may present installation and maintenance challenges and generally take a long time to biodegrade. Some local jurisdictions have had favorable experiences using biodegradable stakes.

This BMP Fact Sheet provides design details for several commonly used ECB applications, including:

ECB-1 Pipe Outlet to Drainageway

ECB-2 Small Ditch or Drainageway

ECB-3 Outside of Drainageway

CITY AND COUNTY OF DENVER

STATE OF COLORADO

DEPARTMENT OF PUBLIC WORKS

Technical Specifications

Contract Number: 201846567

River North Park

December 28, 2018

CITY AND COUNTY OF DENVER
DEPARTMENT OF PUBLIC WORKS

PLANS OF PROPOSED
CITY & COUNTY OF DENVER CONTRACT CONTROL NO. 201309615

FESTIVAL STREET
Master Project Number 2015-PROJMSTR-0000571
PILAR Project Number 2018-CIP-0000241

TABULATION OF LENGTH AND DESIGN DATA

STATION	ROADWAY SH 88		MAJOR STR.
	LIN FT	MILES	LIN FT
FESTIVAL STREET BEGIN PROJECT = STA. 5+63.00 END PROJECT = STA. 11+54.00	591.00	0.11	NA
SUBTOTAL LENGTH	591.00	0.11	
PROJECT GROSS LENGTH	591.00	0.11	

DESIGN DATA	FESTIVAL ST
MINIMUM RADIUS OF CURVE	25 FT.
MAXIMUM GRADE	5.0%
MINIMUM S.S.D. (HORIZONTAL)	> 300 FT.
MINIMUM S.S.D. (VERTICAL)	200 FT.
MAXIMUM DESIGN SPEED	30 MPH (25 MPH POSTED)
2035 DESIGN TRAFFIC (ADT)	
COMBINED	-
TRUCKS %	-

CITY AND COUNTY OF DENVER
DEPARTMENT OF PUBLIC WORKS

APPROVED BY:

EXECUTIVE DIRECTOR OF PUBLIC WORKS — DATE 11/20/18

CITY ENGINEER — DATE 11/14/18

DIRECTOR OF ENGINEERING CAPITAL PROJECTS — DATE 11/16/18

CITY TRAFFIC ENGINEER — DATE 11/20/18

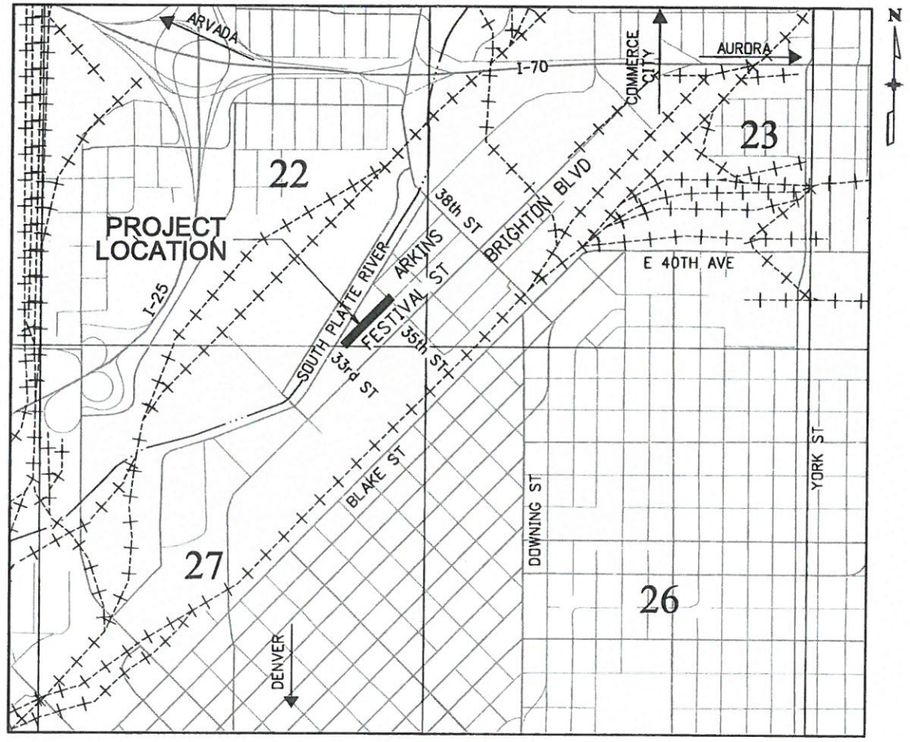

VICINITY MAP
APPROX: 1" = 1000'
SECTION 22 & 27
TOWNSHIP 3 SOUTH
RANGE 68 WEST
0' 500' 1000' 2000'

INDEX OF SHEETS

SHEET NO	TITLE	
1	COVER SHEET	
2	STANDARD PLANS LIST	
3	ABBREVIATIONS AND SYMBOLS	
4 – 6	STANDARD NOTES	3 SHEETS
7	SURVEY CONTROL DIAGRAM	1 SHEET
8	SUMMARY OF APPROXIMATE QUANTITIES	1 SHEET
9	REMOVAL PLAN	1 SHEET
10	TYPICAL ROADWAY SECTIONS	1 SHEET
11	OVERALL GEOMETRIC LAYOUT	1 SHEET
12 – 13	ROADWAY PLAN AND PROFILE	2 SHEETS
14 – 15	INTERSECTION AND HAMMERHEAD DETAILS	2 SHEETS
16	ROADWAY GRADING PLAN	1 SHEET
17	GENERAL UTILITY LEGEND AND CONTACT LIST	1 SHEET
18	UTILITY PLAN	1 SHEET
19 – 22	STORMWATER MANAGEMENT PLANS	4 SHEETS
23 – 24	STRIPING PLANS	2 SHEETS
25	END OF ROADWAY BARRICADE DETAIL	1 SHEET

NOTE: LIGHTING PLANS NOT INCLUDED IN THIS SET (BY OTHERS)

COLORADO LICENSED
RANDAL LAPSLEY
28785
11/26/18
PROFESSIONAL ENGINEER

TSIOUVARAS SIMMONS HOLDERNESS
CONSULTING ENGINEERS

FINAL SUBMITTAL - NOVEMBER 26, 2018

Last Modification Date:	Init.:	Sheet Revisions	
Drawing File Name: 1505480D-COVER SHT.dgn		Date: Comments Init.	
Horizontal Scale: 1:2000	Vert. Scale: As Noted		

DEPARTMENT OF PUBLIC WORKS
201 WEST COLFAX AVENUE
DENVER, CO 80202
PHONE: (720) 913-4501
FAX: (720) 913-4544

As Constructed
No Revisions:
Revised:
Void:

FESTIVAL STREET
COVER SHEET

Designer:	CCL	Structure Numbers	
Detailer:	CCL		
Sheet Subset:	CVR	Subset Sheets:	1 of 1

Project No./Code
-
-
Sheet Number 1

LimC
11/16/2018
8:08:52 AM
P:\1505480D - CCD 33rd Festival 35th\FESTIVAL STREET PROJECT\ROW\

TRANSPORTATION ENGINEERING STANDARD DRAWINGS

NO.	DESCRIPTION
■ 1.0	INDEX OF STANDARD DRAWINGS
☐ 1.1	LEGEND
☐ 2.0	LOCAL STREET CROSS-SECTION AND STANDARD UTILITY PLACEMENT DETAIL
☐ 3.0	COLLECTOR - 2 OR 3 LANE CROSS-SECTION
☐ 4.0	ARTERIAL - 4 LANE WITH MEDIAN AND NO PARKING CROSS-SECTION
☐ 4.1	ARTERIAL - 4 LANE WITH MEDIAN AND PARKING CROSS-SECTION
☐ 4.2	ARTERIAL - 6 LANE CROSS-SECTION
☐ 5.0	CURB & GUTTER AND DETACHED SIDEWALK
■ 5.1	CURB & GUTTER AND ATTACHED SIDEWALK
■ 5.2	TYPICAL CURB & GUTTER SECTIONS
■ 5.3	SPECIAL USE CURB & GUTTER SECTIONS
☐ 5.4	CONCRETE GUTTER OVERLAY
☐ 5.5	CURB BULB EXTENSION
☐ 5.6	MONOLITHIC MEDIAN CURB NOSE
☐ 6.0	STANDARD RESIDENTIAL CURB CUT
☐ 6.1	STANDARD COMMERCIAL & MULTI-FAMILY CURB CUT
☐ 6.2	CURB CUT CROSS-SECTIONS
☐ 6.3	CORNER CLEARANCES & MINIMUM DISTANCES BETWEEN CURB CUTS
■ 7.0a,b	GENERAL NOTES FOR CURB RAMPS
☐ 7.1	CURB RAMP TYPE 1
☐ 7.2a	CURB RAMP TYPE 2
☐ 7.2b	CURB RAMP TYPE 2 MODIFIED (FOR COMBINATION CURB, GUTTER AND SIDEWALK)
■ 7.3	CURB RAMP TYPE 3
☐ 7.4	CURB RAMP TYPE 4
☐ 7.5	DOWNTOWN SIGNALIZED CORNER BLENDED TRANSITION
■ 7.6a,b	CURB RAMP TRUNCATED DOME PLACEMENT OPTIONS
■ 7.7	CURB RAMP TYPICAL SECTION
☐ 7.8	TYPICAL SIDEWALK TRANSITIONS TO CURB RAMP LANDING
☐ 7.9	SIGNAL EQUIPMENT CLEAR ZONE
☐ 8.0	INTERSECTION VALLEY GUTTER
☐ 8.1	SIDEWALK CHASE DRAIN AND TREAD PLATE
☐ 9.0	TYPICAL CONCRETE BUS PULLOUT
☐ 9.1	TYPICAL CONCRETE BUS PAD IN ASPHALT ROADWAY
☐ 10.0	TYPICAL ALLEY LAYOUT
☐ 10.1	ALLEY CUT
☐ 10.2	ALLEY CUT (HISTORICAL DISTRICT)
☐ 10.3	TYPICAL ALLEY CROSS-SECTION
☐ 10.4	ALLEY CURB HEAD
☐ 10.5	"L" TYPE ALLEY CONFIGURATIONS
☐ 11.0a,b,c	GENERAL NOTES FOR CONCRETE PAVEMENT AND PAVEMENT JOINTS
☐ 11.1	CONCRETE NON- ROADWAY JOINTS H AND Z
☐ 11.2	CONCRETE ROADWAY JOINTS AND TRANSITIONS A-DA
☐ 11.3	CONCRETE ROADWAY JOINTS AND TRANSITIONS DC-L
☐ 11.4	CONCRETE ROADWAY JOINTS AND TRANSITIONS SA-X
☐ 11.5	CONCRETE ROADWAY JOINT SEALANTS
☐ 11.6	CONCRETE ROADWAY JOINTING AT NEW MANHOLES AND ALL INLETS
☐ 11.7	CONCRETE ROADWAY JOINTING AT EXISTING MANHOLES
☐ 11.8	CONCRETE ROADWAY TYPICAL JOINT LAYOUT
☐ 11.9	CONCRETE ROADWAY PANEL REPLACEMENT
☐ 11.10	CONCRETE STREET EXPLORATORY HOLES (POTHOLES) TYPICAL REPAIR
☐ 12.0	ASPHALT PATCH
☐ 12.1	TRENCH PATCH THROUGH EXISTING GRAVEL OR LANDSCAPE MATERIALS
☐ 12.2	TRENCH VERTICAL PATCH (ASPHALT) IN MORATORIUM STREET
☐ 12.3	TRENCH ("T") PATCH (CONCRETE)
☐ 12.4	TRENCH BACKFILL MATERIAL REQUIREMENTS
■ 12.5	TYPICAL ASPHALT PAVEMENT DETAIL
■ 12.6	TYPICAL ASPHALT PAVEMENT DETAIL LIFT THICKNESS CRITERIA
■ 12.7	TYPICAL ASPHALT MIX DETAILS BY TRAFFIC USE OR LIFT POSITION
☐ 13.0	TREE PLANTER (RAISED CURB)
☐ 13.1	TREE PLANTER (GRATES)
☐ 13.2	SIDEWALK CLEAR ZONES
☐ 13.3	AMENITY ZONE PERMEABLE PAVERS
☐ 14.0	STANDARD CUL-DE-SAC
☐ 15.0	RIGHT-OF-WAY SURVEY CONTROL-RANGE POINTS

THE STANDARD DRAWINGS/DETAILS INDICATED HEREON BY A MARKED BOX ARE TO BE USED TO CONSTRUCT THIS PROJECT.

NOTE : THE MOST CURRENT CITY AND COUNTY OF DENVER STANDARDS AND DETAILS TO BE USED FOR THE DESIGN AND CONSTRUCTION OF THE PROJECT.

TRAFFIC STANDARD DRAWINGS

NO.	DESCRIPTION
☐ 16.1.0	2011 TRAFFIC ENGINEERING SERVICES
☐ 16.1.1	TRAFFIC SIGNAL NOTES
☐ 16.1.2	LEGEND/KEY NOTES
☐ 16.1.3	SPAN WIRE SIGNAL DESIGN
☐ 16.1.4	MOUNTING HARDWARE
☐ 16.1.5	LOOP DETECTION
☐ 16.1.6	CONDUIT DETAILS
☐ 16.1.7	PULL BOXES
☐ 16.1.8	SIGNAL POLE FOUNDATION
☐ 16.1.9	MAST ARM POLE LOADS
☐ 16.1.10	MOUNTING DETAILS
☐ 16.1.11	TABLE DATA
☐ 16.1.12	LUMINAIRE DETAILS
☐ 16.1.13	PEDESTAL POLE DETAILS
☐ 16.1.14	POLE FOUNDATION DETAILS
☐ 16.1.15	FOUNDATIONS FOR XCEL FACILITIES
☐ 16.1.16	"P" CABINET BASE
☐ 16.1.17	"P" CABINET & BASE
☐ 16.1.18	"M" CABINET BASE
☐ 16.1.19	METER PEDESTAL CABINET DETAILS
☐ 16.1.20	METER PEDESTAL CABINET FOUNDATION AND BASE
☐ 16.1.21	FLASHING BEACON DETAILS
☐ 16.1.22	DRIVER'S FEEDBACK SIGN DETAILS
☐ 16.1.23	FLASHING BEACON & SIGN SHEET 1
☐ 16.1.24	FLASHING BEACON & SIGN SHEET 2
☐ 16.2.1	CROSSWALK LAYOUT DETAILS
■ 16.2.2	PAVEMENT MARKING DETAILS SHEET 1
☐ 16.2.3	PAVEMENT MARKING DETAILS SHEET 2
☐ 16.2.4	BIKE LANE TYPICAL MARKING DETAILS
☐ 16.2.5	CENTRAL BUSINESS DISTRICT PAVEMENT MARKING DETAILS
☐ 16.2.6	SINGLE SIGN POST MOUNTING DETAILS
■ 16.2.7	MULTIPLE SIGN POST MOUNTING DETAILS
☐ 16.2.8	ONE-WAY SIGN PLACEMENT DETAILS
☐ 16.2.9	TRAFFIC SIGN UTILITY POLE MOUNTING DETAIL
■ 16.2.10	GROUND MOUNT STREET NAME SIGN INSTALLATION DETAIL
■ 16.2.11	GROUND MOUNT STREET NAME SIGN DETAIL
☐ 16.2.12	OVERHEAD STREET NAME SIGNS (INSTALLED PRIOR TO APRIL, 2011)
☐ 16.2.13	OVERHEAD STREET NAME SIGNS (INSTALLED AFTER APRIL, 2011)
☐ 16.2.14	PARKING METER POST INSTALLATION
■ 16.2.15	BARRICADE DETAILS

NOTE:

THE FOLLOWING CDOT M&S STANDARD DRAWINGS WILL BE USED, S-630-1, 2

CITY AND COUNTY OF DENVER
PUBLIC WORKS DEPARTMENT
STANDARD DRAWINGS LIST
APRIL 2017

COLORADO LICENSED RANDAL LAPSLEY 28785 11/26/18 PROFESSIONAL ENGINEER

TSIOUVARAS SIMMONS HOLDERNESS
CONSULTING ENGINEERS

FINAL SUBMITTAL - NOVEMBER 26, 2018

LimC
11/28/2018
2:19:43 PM
P:\1505480D - CCD 33rd Festival 35th\FESTIVAL STREET PROJECT\RDWY\

Last Modification Date:	Init.:	
Drawing File Name: 1505480D-GEN-01.dgn		
Horizontal Scale: 1:2	Vert. Scale: As Noted	

Sheet Revisions		
Date:	Comments	Init.

DEPARTMENT OF PUBLIC WORKS
201 WEST COLFAX AVENUE
DENVER, CO 80202
PHONE: (720) 913-4501
FAX: (720) 913-4544

As Constructed	
No Revisions:	
Revised:	
Void:	

FESTIVAL STREET
STANDARD PLANS LIST

Designer:	CCL	Structure Numbers	
Detailer:	CCL		
Sheet Subset:	GEN	Subset Sheets:	1 of 1

Project No./Code	
	-
	-
Sheet Number	2

LIST OF PROJECT SPECIFIC ABBREVIATIONS:

A	
ABC	AGGREGATE BASE COURSE
ABD	ABANDONED
AC	ASBESTOS CEMENT
AL	ALUMINUM
AHW	ALLOWABLE HEADWATER
AUX	AUXILIARY LANE
AV/AVE	AVENUE
AWWA	AMERICAN WATER WORKS ASSOCIATION
B	
BRDG	BRIDGE
BLVD	BOULEVARD
BOTT	BOTTOM
BW	BARBED WIRE
C	
℄	CONTROL LINE
CC	CENTER OF CURVE
CDOT/CDOH	COLORADO DEPARTMENT OF TRANSPORTATION
CIR	CIRCLE
CL	CONTROL LINE
CMP	CORRUGATED METAL PIPE
CO.	COMPANY
COL	CITY OF LAKEWOOD
CS	CURVE TO SPIRAL
CSP	CORRUGATED STEEL PIPE
CT	COURT
C900	AWWA C900 DR25 PVC (PRESSURE RATED PLASTIC PIPE)
CU	COPPER
D	
DA	DRAINAGE AREA
DHW	DESIGN HEADWATER
DIP	DUCTILE IRON PIPE
DR	DRIVE
DWG	DRAWING
DW	DRIVEWAY
E	
e	EXTERNAL DISTANCE
ELEC	ELECTRICAL
ELEV	ELEVATION
ELT	ELECTRIC TRANSMISSION
EP	EDGE OF PAVEMENT
EX/EXIST	EXISTING
F	
FB	STEEL
F/FL	FLOWLINE
FO	FIBER OPTIC
FOC	FIBER OPTIC CABLE
G	
GB	GRADE BREAK
H	
HERCP	HORIZONTAL ELLIPTICAL REINFORCED CONCRETE PIPE
HCL	HORIZONTAL CONTROL LINE
HGL	HYDRAULIC GRADE LINE
HP	HINGE POINT
HW/D	HEADWATER TO DEPTH RATIO
I	
IRR	IRRIGATION
INV	INVERT
K	
K	LENGTH OF VERTICAL CURVE PER CHANGE IN GRADE
KVA	KILO VOLT AMPERES
L	
L	LENGTH OF CURVE
LAT	LATERAL
LF	LINEAR FEET
LN	LANE
LT	LEFT
M	
MDS	MAXIMUM DESIGN SPEED
MH	MANHOLE
ML	MAINLINE
MW	MILL WRAP STEEL
N	
NA	NOT APPLICABLE
NC	NORMAL CROWN
NF	NOT FOUND
O	
OH	OVERHEAD
OHE	OVERHEAD ELECTRIC
OHT	OVERHEAD TELEPHONE
O/S	OFFSET
P	
PC	POINT OF CURVATURE
PCC	POINT OF COMPOUND CURVATURE
PCCP	PORTLAND CEMENT CONCRETE PAVEMENT
PCR	POINT OF CURB RETURN
PE	POLYETHYLENE
PED	POLYETHYLENE DISTRIBUTION
PGL	PROPOSED GRADE LINE
PH	POTHOLE
PI	POINT OF INTERSECTION
P/PL	PROPERTY LINE
PLD	POROUS LANDSCAPE DETENTION
POB	POINT OF BEGINNING
POE	POINT OF ENDING
PR/PROP	PROPOSED
PRVT	PRIVATE
PVC	POLYVINYL CHLORIDE
PVRC	POINT OF VERTICAL REVERSE CURVATURE
PVT	POINT OF VERTICAL TANGENCY
R	
RCP	REINFORCED CONCRETE PIPE
RD	ROAD
REINF	REINFORCEMENT
RET	RETAINING
ROW	RIGHT OF WAY
RT	RIGHT
S	
SAN SWR	SANITARY SEWER
SD	STOPPING DISTANCE
SDWLK	SIDEWALK
SRB	SOIL RETENTION BLANKET
SRT	SLOTTED RAIL TERMINAL
SSD	STOPPING SIGHT DISTANCE
ST	STREET
STM	STORM
SUPER	SUPERELEVATION
SVC	SERVICE
SWC	SWITCH CABINET
T	
T	TANGENT DISTANCE
TBW	TOP BACK WALK
TEL	TELEPHONE
TEMP	TEMPORARY
TOW	TOP OF WALL
TP	TERMINAL POLE
TS	TANGENT TO SPIRAL
TV	TELEVISION
U	
U	UNKNOWN
UGE	UNDERGROUND ELECTRIC
UGFO	UNDERGROUND FIBER OPTIC
UGT	UNDERGROUND TELEPHONE
UGTV	UNDERGROUND TELEVISION
V	
VT	VOLT
W	
W	WIDTH
WTR	WATER
Y	
YR	YEAR
X	
XFMR	TRANSFORMER
XING	CROSSING

LIST OF SYMBOLS:

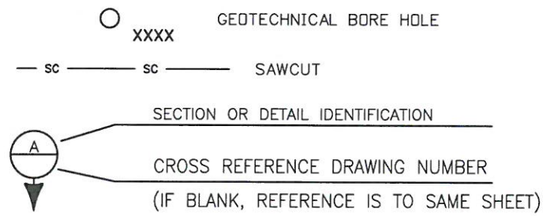



TSIOUVARAS SIMMONS HOLDERNESS
CONSULTING ENGINEERS

FINAL SUBMITTAL - NOVEMBER 26, 2018

Charlie.Lim
8/10/2018
10:03:22 AM
P:\15054800 - CCD 33rd Festival 35th\FESTIVAL STREET PROJECT\ROWY\

Last Modification Date:	Init.:
Drawing File Name: 15054800-GEN-02.dgn	
Horizontal Scale: 1:2	Vert. Scale: As Noted

Sheet Revisions		
Date:	Comments	Init.

DEPARTMENT OF PUBLIC WORKS
201 WEST COLFAX AVENUE
DENVER, CO 80202
PHONE: (720) 913-4501
FAX: (720) 913-4544

As Constructed
No Revisions:
Revised:
Void:

FESTIVAL STREET ABBREVIATIONS AND SYMBOLS			
Designer:	CC;	Structure Numbers	
Detailer:	CCL		
Sheet Subset:	GEN	Subset Sheets:	1 of 1

Project No./Code
-
-
Sheet Number 3

STANDARD NOTES

GENERAL

1. PROPOSED FINISHED GROUND ELEVATIONS FOR ITEMS TO BE ADJUSTED, RESET, OR MODIFIED SHALL BE FIELD VERIFIED BY THE CONTRACTOR.

2. THE CONTRACTOR SHALL BE RESPONSIBLE FOR ALL ASPECTS OF SAFETY INCLUDING, BUT NOT LIMITED TO EXCAVATION, TRENCHING, SHORING, TRAFFIC CONTROL, AND SECURITY.

3. THE CONTRACTOR SHOULD REMOVE MATERIALS AND EQUIPMENT FROM THE ROADWAY ROW AT THE CLOSE OF DAILY OPERATIONS. THE TRAFFIC CONTROL PLAN (TCP) MUST INCLUDE PROTECTIVE MEASURES WHERE MATERIALS AND EQUIPMENT MAY BE STORED IN THE ROW, BUT ENSURE FIVE FEET OF PEDESTRIAN CLEARANCE ON SIDEWALKS. THE CONTRACTOR SHALL NOT STOCKPILE MATERIAL IN THE CLEAR ZONE OF THE TRAVELED WAY.

4. THE CONTRACTOR IS RESPONSIBLE FOR OBTAINING ALL PROJECT PERMITS ASSOCIATED WITH CONSTRUCTION. THE CONTRACTOR IS RESPONSIBLE FOR BEING AWARE OF, NOTIFYING, COORDINATING AND SCHEDULING ALL INSPECTIONS REQUIRED FOR FINAL APPROVALS AND PROJECT ACCEPTANCE. ALL WORK, INCLUDING CORRECTION WORK, IS SUBJECT TO NOTIFICATION AND INSPECTION REQUIREMENTS.

5. IF ANY OF THE CONTRACTOR'S OPERATIONS DESTROY OR DAMAGE ANY PROPERTY, PUBLIC OR PRIVATE, THE CONTRACTOR SHALL PROMPTLY REPAIR OR REPLACE SUCH PROPERTY, TO THE SATISFACTION OF THE PROJECT MANAGER, BEFORE THE CITY WILL ACCEPT OR PAY FOR THE WORK PERFORMED UNDER THE CONTRACT. IF THE CONTRACTOR FAILS TO REPAIR OR REPLACE SUCH PROPERTY, THE CITY, AT THE SOLE DISCRETION OF THE MANAGER, MAY UNDERTAKE SUCH REPAIR OR REPLACEMENT AND DEDUCT THE COST OF THE SAME FROM AMOUNTS PAYABLE TO THE CONTRACTOR UNDER THE CONTRACT.

6. THE CONTRACTOR SHALL BE RESPONSIBLE FOR RECORDING AS-BUILT INFORMATION ON A SET OF RECORD DRAWINGS KEPT ON THE CONSTRUCTION SITE, AND AVAILABLE TO THE CITY INSPECTOR AT ALL TIMES. UPON COMPLETION OF THE WORK, THE CONTRACTOR SHALL SUBMIT RECORD DRAWINGS, IN AN AUTOCAD COMPATIBLE FORMAT, TO THE CITY. THE PRODUCTION OF THESE DOCUMENTS WILL NOT BE PAID FOR SEPARATELY, BUT SHALL BE INCLUDED IN THE COST OF THE WORK.

7. ALL WORK SHALL CONFORM TO CURRENT CITY AND COUNTY OF DENVER STANDARDS AND SPECIFICATIONS. THE CITY RESERVES THE RIGHT TO ACCEPT OR REJECT ANY MATERIALS AND WORKMANSHIP THAT DOES NOT CONFORM TO THE LATEST EDITION OF THE CITY STANDARDS SPECIFICATIONS, OR HALT CONSTRUCTION UNTIL THE CONFLICT IS RESOLVED.

8. PRIOR TO THE COMMENCEMENT OF CONSTRUCTION, ALL STORM DRAIN INLETS, LATERALS, MAINS AND OTHER STORM RUNOFF APPURTENANCES WITHIN THE PROJECT LIMITS SHALL BE CLEARED OF SEDIMENT AND DEBRIS IN ACCORDANCE WITH DENVER WASTEWATER MANAGEMENT DIVISION STANDARDS. AFTER CONSTRUCTION, THE CONTRACTOR SHALL REMOVE ANY SEDIMENT OR DEBRIS FROM THE STORM SEWER SYSTEM AT NO COST TO THE CITY.

9. PRIOR TO FINAL ACCEPTANCE, ALL DISTURBED PORTIONS OF ROADWAY ROW SHALL BE CLEANED UP AND RESTORED TO THEIR ORIGINAL CONDITION, SUBJECT TO CITY APPROVAL.

10. NO WORK SHALL BE PERMITTED ON WEEKENDS OR HOLIDAYS WITHOUT PRIOR AUTHORIZATION OR UNLESS OTHERWISE SPECIFIED. THE CITY MAY RESTRICT WORK IN THE ROW DURING ADVERSE WEATHER CONDITIONS OR DURING PERIODS OF HIGH TRAFFIC VOLUME.

11. NO CLEATED OR TRACKED EQUIPMENT MAY WORK IN OR MOVE OVER PAVED SURFACES WITHOUT MATS.

12. WHERE ROW FENCES MUST BE REMOVED OR CUT TO FACILITATE CONSTRUCTION, APPROVAL MUST FIRST BE GIVEN BY THE CITY. EXISTING ROW/FENCE LINE MUST BE ESTABLISHED BY GOOD SURVEY PRACTICES. FENCES WILL BE REPLACED IN KIND ACCORDING TO CITY FENCING STANDARDS.

13. PROTECTION AND REPLACEMENT OF STREET IMPROVEMENTS ARE THE RESPONSIBILITY OF THE CONTRACTOR UNTIL THESE IMPROVEMENTS ARE FULLY COMPLETED AND ACCEPTED BY THE CITY.

14. THE FESTIVAL STREET IS BEING CONSTRUCTED IN CONJUNCTION WITH THE RIVER NORTH PARK PROJECT. REFER TO THE RIVER NORTH PARK PLANS DATED APRIL, 2018. SOME ITEMS REQUIRED TO CONSTRUCT FESTIVAL STREET SUCH AS REMOVAL ITEMS MAY BE SHOWN ON THE RIVER NORTH PARK PLANS. THE CONTRACTOR SHALL COORDINATE THE WORK BETWEEN PROJECTS. CONFLICTS BETWEEN THE PLANS SHALL BE BROUGHT TO THE ATTENTION OF THE PROJECT ENGINEER.

PROJECT PLANS, SPECIFICATIONS, PERMITS

1. ALL MATERIAL, EQUIPMENT, INSTALLATION AND CONSTRUCTION WITHIN THE ROW SHALL BE IN ACCORDANCE WITH THE LATEST EDITION OF THE FOLLOWING STANDARD REFERENCES AS APPLICABLE:
   a. CITY AND COUNTY OF DENVER, STANDARDS AND DETAILS FOR ENGINEERING DIVISION
   b. STORM DRAINAGE AND SANITARY SEWER CONSTRUCTION DETAIL AND TECHNICAL SPECIFICATIONS
   c. DEPARTMENT OF PUBLIC WORKS STANDARD SPECIFICATIONS FOR CONSTRUCTION GENERAL CONTRACT CONDITIONS
   d. WASTEWATER MANAGEMENT DIVISION STANDARD DETAILS
   e. TRAFFIC STANDARD DRAWINGS AND TRAFFIC ENGINEERING SERVICES PROJECT SPECIALS
   f. COLORADO DEPARTMENT OF TRANSPORTATION (CDOT) STANDARD SPECIFICATIONS FOR ROAD AND BRIDGE CONSTRUCTION AND STANDARD PLANS, (M&S STANDARDS)
   g. FEDERAL HIGHWAY ADMINISTRATION (FHWA), MANUAL ON UNIFORM TRAFFIC CONTROL DEVICES (MUTCD) FOR STREETS AND HIGHWAYS AND THE COLORADO SUPPLEMENT THERETO
   h. AMERICAN ASSOCIATION OF STATE AND HIGHWAY TRANSPORTATION OFFICIALS (AASHTO) ROADSIDE DESIGN GUIDE

2. THE CONTRACTOR SHALL HAVE ONSITE AT ALL TIMES, ONE COPY OF THE APPROVED PLANS, ONE COPY OF THE APPROPRIATE STANDARDS AND SPECIFICATIONS, AND COPIES OF ANY PERMITS AND EXTENSION AGREEMENTS NEEDED FOR THE JOB.

3. IF DURING THE CONSTRUCTION PROCESS, CONDITIONS ARE ENCOUNTERED WHICH COULD INDICATE A SITUATION THAT IS NOT IDENTIFIED ON THE PLANS OR SPECIFICATIONS, THE CONTRACTOR SHALL CONTACT THE PROJECT MANAGER IMMEDIATELY.

UTILITIES

1. THE TYPE, SIZE, LOCATION AND NUMBER OF ALL KNOWN UNDERGROUND UTILITIES ARE APPROXIMATE WHEN SHOWN ON THE DRAWINGS, UNLESS OTHERWISE NOTED. IT SHALL BE THE RESPONSIBILITY OF THE CONTRACTOR TO VERIFY THE EXISTENCE AND LOCATION OF ALL UNDERGROUND UTILITIES ALONG THE ROUTE OF THE WORK BEFORE COMMENCING NEW CONSTRUCTION. RESPONSIBILITIES FOR THE RELOCATION OF UTILITY LINES ARE AS NOTED IN THE PROJECT SPECIAL PROVISIONS. THE CONTRACTOR SHALL COOPERATE WITH COMPANIES TRYING TO COORDINATE THE RELOCATION EFFORT. LINES NOT RELOCATED SHALL BE PROTECTED BY THE CONTRACTOR IN PLACE. THE CONTRACTOR SHALL CONTACT THE UTILITY NOTIFICATION CENTER OF COLORADO (UNCC) AT 1-800-922-1987, AT LEAST 2 WORKING DAYS PRIOR TO BEGINNING EXCAVATION OR GRADING.

2. THE CONTRACTOR SHALL BE RESPONSIBLE FOR PROTECTING UTILITIES DURING CONSTRUCTION AND SHALL HOLD THE CITY AND ITS ENGINEERS HARMLESS FOR DAMAGES ARISING FROM THE CONTRACTOR'S FAILURE TO ADEQUATELY PROTECT EXISTING UTILITIES. DAMAGED UTILITES SHALL BE REPAIRED BY AND AT THE EXPENSE OF THE CONTRACTOR.

3. THE CONTRACTOR IS REQUIRED TO RESET, ADJUST OR REPLACE ANY UTILITIES THAT ARE IMPACTED BY CONSTRUCTION AND ARE DESIGNED TO REMAIN WITHIN THE PROJECT LIMITS.

4. LOCATIONS FOR POTHOLING SHALL BE AS APPROVED BY THE PROJECT MANAGER.

REMOVALS, EXISTING ITEMS, SAW CUTTING

1. ALL ITEMS, EXCEPT AS INDICATED IN NOTE 2, TO BE REMOVED AND NOT RESET SHALL BECOME THE PROPERTY OF THE CONTRACTOR AND SHALL BE REMOVED FROM THE SITE AND DISPOSED OF PROPERLY.

2. SIGNS AND / OR SIGNAL EQUIPMENT DESIGNATED AS REMOVAL ITEMS SHALL BE CAREFULLY REMOVED AND DELIVERED BY THE CONTRACTOR TO THE CITY YARD AT 5440 ROSLYN STREET, BUILDING E. ANY MATERIAL DESIGNATED FOR SALVAGE THAT IS DAMAGED AFTER REMOVAL SHALL BE REPAIRED OR REPLACED BY THE CONTRACTOR TO THE SATISFACTION OF THE ENGINEER. NO SEPARATE PAYMENT SHALL BE MADE FOR LOADING, HAULING, UNLOADING, OR PLACING SALVAGED MATERIALS IN THE CITY YARD.

3. WHERE IT IS REQUIRED TO REMOVE EXISTING CONCRETE OR ASPHALT, CUTTING SHALL BE DONE TO A NEAT WORK LINE TO FULL DEPTH USING A SAW, CUTTING WHEEL, OR OTHER METHOD APPROVED BY THE PROJECT MANAGER. THIS WILL NOT BE PAID SEPARATELY, BUT SHALL BE INCLUDED IN THE WORK.

4. REMOVAL OF EXISTING CURB AND GUTTER, SIDEWALK, DRIVEWAYS, CURB CUTS, AND OTHER CONCRETE ITEMS THAT ARE ATTACHED OR ADJACENT TO OTHER CONCRETE ITEMS SHALL BE REMOVED TO THE NEAREST JOINT, AS NEEDED TO AVOID DAMAGING THE REMAINING CONCRETE ITEMS. THE CONTRACTOR SHALL BE RESPONSIBLE FOR DAMAGE TO ADJACENT SIDEWALK DURING CURB AND GUTTER REMOVAL AND SHALL REPLACE DAMAGED SECTIONS AT NO ADDITIONAL COST TO THE PROJECT.

5. THE CONTRACTOR IS REQUIRED TO RESET, ADJUST, OR REPLACE ANY UTILITIES, LANDSCAPING, SPRINKLER SYSTEMS, SIGNS, SIDEWALKS, ETC. THAT ARE IMPACTED BY CONSTRUCTION AND ARE NOT DESIGNATED TO BE REMOVED.

6. THE CONTRACTOR SHALL USE AGGREGATE BASE COURSE OR ASPHALT MILLINGS TO FILL AREAS LEFT BY REMOVAL OF DRIVEWAY OR CURB RAMP PRIOR TO PLACEMENT OF NEW SIDEWALK, DRIVEWAY OR CURB RAMP.

PAVEMENT

1. A TACK COAT IS REQUIRED PRIOR TO THE PLACEMENT OF SUBSEQUENT LIFTS OF HMA.

2. WHERE NEW CONSTRUCTION IS TO ABUT EXISTING PAVEMENT, THE EXISTING PAVEMENT SHALL BE REMOVED TO A NEAT VERTICAL LINE TO CREATE A CLEAN CONSTRUCTION JOINT.

3. PATCH ASPHALT PAVEMENT AS NECESSARY TO JOIN NEW GUTTERS WITH EXISTING PAVEMENT.

4. WHEN AN EXISTING ASPHALT STREET IS CUT, THE STREET MUST BE RESTORED TO A CONDITION EQUAL TO OR BETTER THAN ITS ORIGINAL CONDITION. THE EXISTING STREET CONDITION SHALL BE DOCUMENTED BEFORE ANY CUTS ARE MADE. PATCHING SHALL BE DONE IN CONFORMACE WITH THE PROJECT STANDARDS. THE FINISHED PATCH SHALL BLEND SMOOTHLY INTO THE EXISTING SURFACE. ALL LARGE PATCHES SHALL BE PAVED WITH AN ASPHALT LAY-DOWN MACHINE.

COLORADO LICENSED
RANDAL TAPSLEY
28785
11/20/18
PROFESSIONAL ENGINEER

TSIOUVARAS SIMMONS HOLDERNESS
CONSULTING ENGINEERS

FINAL SUBMITTAL - NOVEMBER 26, 2018

Charlie.Lim
8/10/2018
10:04:07 AM
P:\1505480D - CCD 33rd Festival 35th\FESTIVAL STREET PROJECT\ROW\

Last Modification Date:	Init.:		
Drawing File Name: 1505480D-GEN-03.dgn			
Horizontal Scale: 1:2	Vert. Scale: As Noted		

Sheet Revisions

Date:	Comments	Init.

DEPARTMENT OF PUBLIC WORKS
201 WEST COLFAX AVENUE
DENVER, CO 80202
PHONE: (720) 913-4501
FAX: (720) 913-4544

As Constructed
No Revisions:
Revised:
Void:

FESTIVAL STREET
STANDARD NOTES

Designer:	CCL	Structure Numbers	
Detailer:	CCL		
Sheet Subset:	GEN	Subset Sheets:	1 of 3

Project No./Code
-
-
Sheet Number 4

STANDARD NOTES

EARTHWORK AND EXCAVATIONS

1. THE CONTRACTOR SHALL LIMIT CONSTRUCTION ACTIVITIES TO THOSE AREAS WITHIN THE LIMITS OF DISTURBANCE AND TOES OF SLOPE AS SHOWN ON THE PLANS AND CROSS SECTION. ANY DISTURBANCE BEYOND THESE LIMITS SHALL BE RESTORED TO ORIGINAL CONDITIONS AT THE EXPENSE OF THE CONTRACTOR.
2. WATER SHALL BE USED AS A DUST PALLIATIVE WHERE REQUIRED. COST FOR DUST PALLATIVE SHALL NOT BE MEASURED AND PAID FOR SEPARATELY, BUT SHALL BE CONSIDERED INCIDENTAL TO THE WORK.
3. THE DEPTH OF RECONDITIONING AND FOR THE BASES OF CUTS AND FILLS SHALL BE 6 INCHES. THE PROJECT SPECIFIED MOISTURE DENSITY CONTROL SHALL BE APPLIED FOR THE SPECIFIED DEPTH. THE EXCAVATION REQUIRED FOR COMPACTION OF BASES OF CUTS AND FILLS WILL BE CONSIDERED SUBSIDIARY TO THAT OPERATION AND WILL NOT BE PAID FOR SEPARATELY.
4. MOISTURE DENSITY CONTROL SHALL BE APPLIED FULL DEPTH FOR ALL EMBANKMENTS.
5. DURING EACH PHASE OF CONSTRUCTION, THE CONTRACTOR SHALL SHAPE TO DRAIN AND COMPACT THE WORK AREA TO A UNIFORM CROSS-SECTION. ELIMINATE ALL RUTS AND LOW SPOTS THAT COULD HOLD WATER. AREAS AND FACILITIES SUBJECTED TO FLOODING, REGARDLESS OF THE SOURCE OF WATER, SHALL BE PROMPTLY DEWATERED AND RESTORED AT NO ADDITIONAL COST TO THE CITY.
6. ALL WORK SHALL BE PROPERLY BACKFILLED OR PROTECTED PRIOR TO THE END OF THE WORKDAY. NO UNPROTECTED OPEN HOLES ARE ALLOWED OVERNIGHT.
7. WHERE CONSISTENT WITH SAFETY AND SPACE CONSIDERATIONS, EXCAVATED MATERIAL IS TO BE PLACED ON THE UPHILL SIDE OF TRENCHES.
8. MATERIAL REMOVED FROM ANY PORTION OF THE ROADWAY PRISM MUST BE REPLACED IN LIKE KIND WITH EQUAL OR BETTER COMPACTION. NO SEGREGATION OF MATERIALS WILL BE PERMITTED.

CONCRETE

1. IF CONCRETE REPLACEMENT IS NECESSARY, THE ENTIRE AFFECTED SLAB OR PANEL MUST REPLACED.
2. THE CONTRACTOR SHALL SELECT AND USE A BOXOUT AT CATCH BASINS, MANHOLES, AND OTHER ROADWAY APPURTENANCES OF SIMILAR AND LARGER SIZE. SEE CCD STD DWG NO. 11.5.
3. SIDEWALK SHALL BE CLASS P CONCRETE. THE USE OF ¾ IN (#67) TOP SIZE AGGREGATE IS ALLOWED.
4. BENDER BOARDS (TWO INCH MINIMUM THICKNESS) SHALL BE USED ON CURVES WITH A RADIUS LESS THAN 75 FEET SHALL BE FORMED TO ACHIEVED A SMOOTH, NON-CHORDED EDGE.
5. CURB AND GUTTER ANGLE BREAKS SHALL BE SMOOTHED WITH A 2 FT RADIUS UNLESS OTHERWISE SHOWN ON THE PLANS.
6. PROVIDE A 2 FT CURB AND GUTTER TRANSITION AT EACH END OF INLETS.
7. THE CONTRACTOR SHALL INSTALL ½ IN EXPANSION JOINT MATERIAL BETWEEN THE CURB, CURB AND GUTTER AND THE SIDEWALK, AND AROUND INLET STRUCTURES OR BLOCKOUTS OR AS DIRECTED BY THE PROJECT MANAGER.
8. CURB RAMPS SHALL BE CONSTRUCTED USING TRUNCATED DOMES AS SHOWN IN THE CITY AND COUNTY OF DENVER STANDARD DETAILS. TRUNCATED DOMES AND GROOVES SHALL NOT BE PAID SEPARATELY, BUT INCLUDED IN THE COST OF THE CONCRETE CURB RAMP.

TRAFFIC

1. THE CONTRACTOR IS RESPONSIBLE FOR PROVIDING AND MAINTAINING ADEQUATE TRAFFIC CONTROL THROUGHOUT THE PROJECT, INCLUDING PROPER TRAFFIC CONTROL DEVICES AND PERSONNEL. A TRAFFIC CONTROL PLAN (TCP) IS SUBJECT TO CITY APPROVAL PRIOR TO COMMENCING WORK ON ROADWAY ROW. A COPY OF APPROVED TCPS MUST BE AVAILABLE ON SITE DURING WORK. TRAFFIC CONTROL IS TO BE IN ACCORDANCE WITH THE MANUAL ON UNIFORM TRAFFIC CONTROL DEVICES (MUTCD).
2. ALL PAVEMENT MARKINGS MUST BE INSTALLED ACCORDING TO MANUFACTURER'S SPECIFICATIONS.
3. COORDINATE ALL TRAFFIC SIGNAL EQUIPMENT RELOCATIONS WITH PUBLIC WORKS TRAFFIC ENGINEERING SERVICES (TES).

LANDSCAPING

1. THE CONTRACTOR SHALL NOT SPRAY, CUT OR TRIM TREES OR OTHER LANDSCAPING WITHIN THE ROW UNLESS SUCH WORK IS OTHERWISE SPECIFIED IN THIS PERMIT OR CLEARLY INDICATED ON THE APPROVED PLANS.
2. SEEDING, SODDING AND PLANTING IN THE ROW SHALL BE AS SPECIFIED OR OTHERWISE APPROVED BY THE CITY. CONSTRUCTION, MAINTENANCE AND WATERING REQUIREMENTS SHALL CONFORM TO CITY STANDARD SPECIFICATIONS.
3. UNLESS STREETSCAPE HAS BEEN APPROVED, THE CONTRACTOR SHALL LANDSCAPE ALL ROW WITH SOD AND TREES. ALL LANDSCAPING WITHIN THE ROW SHALL BE IN CONFORMANCE WITH THE LATEST STREETSCAPE DESIGN MANUAL. NO LOOSE MATERIAL (I.E. ROCK, BARK, GRAVEL, ETC.) SHALL BE ALLOWED. DECORATIVE CONCRETE OR LOW GROWING PLANT MATERIAL MAY BE ALLOWED ONLY WITH THE SPECIFIC APPROVAL OF THE CITY. TREES SHALL BE PRE-APPROVED BY THE DEPARTMENT OF PARKS AND RECREATION, FORESTRY OFFICE, AND SHALL BE A MINIMUM OF 20-FEET FROM PROPERTY CORNERS AT INTERSECTIONS, 25-FEET FROM STREET LIGHTS AND 10-FEET FROM EDGE OF DRIVEWAYS.

DRAINAGE

1. ALL SEWER PIPES SHALL BE INSTALLED WITH CLASS B BEDDING AS A MINIMUM.
2. SANITARY SEWER PIPES SHALL BE PVC AND CONFORM TO: ASTMD3034 SDR 35 FOR SIZES 8 INCHES TO 15 INCHES IN DIAMETER (SOLID WALL), ASTM F789 FOR 18 INCHES (SOLID WALL), ASTM F679 FOR SIZES 18 TO 36 INCHES (SOLID WALL), ASTM F949 FOR SIZES 8 TO 36 INCHES (PVC PROFILE WALL), ASTM F794 FOR SIZES 8 TO 48 INCHES (PROFILE WALL), OR ASTM F1803 FOR SIZES 18 TO 60 INCHES (CLOSED PROFILE GRAVITY PIPE).
3. THE CONTRACTOR PERFORMING WORK ON ANY PUBLIC OR PRIVATE STORM SEWER FACILITY OR APPURTENANCE MUST BE PROPERLY TRADE LICENSED AS A COMPANY AND HAVE A LICENSED PLUMBER OR CERTIFIED JOURNEYMAN DRAINLAYER ON SITE DURING THE WORK.
4. ACCESS MUST BE MAINTAINED FOR ALL SEWER MANHOLES DURING CONSTRUCTION. MINIMUM ACCESS TO EACH MANHOLE IS A 20 FOOT WIDE LANE FROM THE NEAREST PUBLIC RIGHT OF WAY, CENTERED AT THE MANHOLE INCLUDING A 10 FOOT RADIUS AROUND THE MANHOLE AND 22.0 FEET OF VERTICAL CLEARANCE.
5. ALL DROP STRUCTURES SHALL BE INSPECTED BY CCD MAINLINE INSPECTIONS. THE CONTRACTOR MUST CALL MAINLINE INSPECTIONS @ (303)446-3722, A MINIMUM OF 24 HOURS PRIOR TO THE PRECONSTRUCTION MEETING AND PRIOR STARTING ANY WORK.

SURVEYING

1. PRIOR TO BEGINNING WORK ON THE PROJECT, THE CONTRACTOR'S SURVEYOR SHALL PERFORM A SURVEY TO VERIFY ALL SURVEY CONTROL POINTS, CITY OF DENVER RANGE POINTS, SECTION CORNERS, AND BENCHMARKS AS SHOWN ON THE SURVEY CONTROL DIAGRAM. THE CONTRACTOR SHALL BE RESPONSIBLE FOR REPLACING ALL LAND SURVEY MONUMENTS DISRUPTED BY CONSTRUCTION ACTIVITIES OR BY NEGLIGENCE ON THE PART OF THE CONTRACTOR. THE CONTRACTOR IS REQUIRED TO FOLLOW COLORADO STATE LAW REGARDING SURVEY MONUMENTS. THE CONTRACTOR SHALL RETAIN A COLORADO LICENSED PROFESSIONAL LAND SURVEYOR TO RESET ANY AFFECTED SURVEY MONUMENTS. THIS WILL NOT BE PAID SEPARATELY, BUT SHALL BE INCLUDED IN THE WORK UNLESS SPECIFIED OTHERWISE IN SECTION 625. FOR FURTHER INFORMATION CONTACT:

   PUBLIC WORKS - SURVEY DEPARTMENT
   ATTN: CITY SURVEYOR
   201 W. COLFAX AVE.
   DENVER, CO 80202
   720-865-3121

SURVEYING (CONT'D)

2. AFTER COMPLETION OF THE PAVING OPERATIONS, THE CONTRACTOR SHALL UPGRADE TEMPORARY RANGE POINTS WITH PERMANENT RANGE POINT MONUMENTS AT THE LOCATIONS AS INDICATED ON THE LAND SURVEY CONTROL DIAGRAM. MONUMENTS SHALL MEET CURRENT CITY AND COUNTY OF DENVER STANDARDS. SEE SECTION 625 OF THE SPECIAL PROVISIONS FOR MORE INFORMATION.
3. A SURVEY SHALL BE DEPOSITED WITH THE CITY AND COUNTY OF DENVER PER STATE STATUTE. CITY MONUMENT TIE OUT SHEETS SHALL BE PREPARED FOR ALL RANGE POINTS WITHIN THE PROJECT AND DEPOSITED WITH THE CITY SURVEYOR.
4. ANY PERSON WHO KNOWINGLY REMOVES, ALTERS, OR DEFACES ANY PUBLIC LAND SURVEY MONUMENT AND/OR BOUNDARY MONUMENT OR ACCESSORY, COMMITS A CLASS TWO (2) MISDEMEANOR PURSUANT TO STATE STATUTE C.R.S. SECTION 18-4-508.
5. ALL STATIONS AND OFFSETS SHOWN ON THE PLANS ARE TO THE CONTROL LINES UNLESS OTHERWISE NOTED. THE USE OF CONTROL MONUMENTS FOR CONSTRUCTION STAKING OTHER THAN THOSE SHOWN ON THE PLANS OR APPROVED BY THE PW DEPT IS PROHIBITED, AND USE OF SUCH MONUMENTS IS AT THE CONTRACTOR'S SOLE RISK.
6. PROPOSED FINISHED GROUND ELEVATIONS FOR ITEMS TO BE ADJUSTED, RESET OR MODIFIED SHALL BE FIELD VERIFIED BY THE CONTRACTOR.

ENVIRONMENTAL

1. CONTRACTOR SHALL TAKE REASONABLE MEASURES TO PREVENT PARTICULATE MATTER FROM BECOMING AIRBORNE AND TO PREVENT THE VISIBLE DISCHARGE OF FUGITIVE PARTICULATE EMISSIONS BEYOND THE PROPERTY ON WHICH THE EMISSIONS ORIGINATE. THE MEASURES TAKEN MUST BE EFFECTIVE IN THE CONTROL OF FUGITIVE PARTICULATE EMISSIONS AT ALL TIMES ON THE SITE, INCLUDING PERIODS OF INACTIVITY SUCH AS EVENINGS, WEEKENDS, AND HOLIDAYS AS WELL AS ANY OTHER PERIOD OF INACTIVITY.
2. ANY FILL MATERIAL OR SOILS TO BE MOVED TO AND PLACED ON CCD-OWNED PROPERTY OR PLACED ON REAL PROPERTY TO BE TRANSFERRED TO THE CCD MUST BE FREE OF KNOWN CONTAMINATION (OBSERVED OR PREVIOUSLY DOCUMENTED) AND BE ACCEPTABLE FOR UNRESTRICTED RESIDENTAIL USE. CONTACT DAVE ERICKSON, DENVER ENVIRONMENTAL HEALTH (720-865-5433) FOR CLARIFICATION, IF NEEDED, REGARDING THIS CCD REQUIREMENT.
3. IF UNKNOWN/UNIDENTIFIED UNDERGROUND STORAGE TANKS, DRUMS, ODOROUS SOIL, STAINED SOIL, ASBESTOS-CEMENT PIPE, TRANSITE, BUILDING DEBRIS OR WASTE MATERIALS ARE ENCOUNTERED DURING THE PROJECT, CONTRACTOR IMMEDIATELY STOP WORK IN THE AREA OF DISCOVERY UNTIL DENVER ENVIRONMENTAL HEALTH (DEH) MAKES A DETERMINATION OF HOW TO PROCEED. CONTRACTOR SHALL IMMEDIATELY NOTIFY DEH OF THE DISCOVERY VIA THE PHONE NUMBER 720-460-1706.
4. THE CONTRACTOR SHALL DIRECT NON-RECYCLABLE, NON-HAZARDOUS WASTES FROM CCD-OWNED OR CONTROLLED PROPERTY OR FACILITIES TO THE DENVER ARAPAHOE DISPOSAL SITES (DADS) LANDFILL FOR DISPOSAL, FOLLOWING THE REQUIREMENT AND PROCEDURAL GUIDANCE OUTLINED IN CCD EXECUTIVE ORDER 115.
5. NOISE CONTROL, EXEMPTED HOURS FOR CONSTRUCTION IN THE CITY AND COUNTY OF DENVER ARE FROM 7 A.M. TO 9 P.M. MONDAY THROUGH FRIDAY AND 8 A.M. TO 5 P.M. ON SATURDAYS AND SUNDAYS PER SECTION 36-6.(B)(7) AND 36-7.(5)A., B. AND C. OF CHAPTER 36 NOISE CONTROL, DENVER REVISED MUNICIPAL CODE (DRMC). IF THERE IS AN ANTICIPATED NEED TO WORK OUTSIDE OF THE EXEMPTED HOURS FOR CONSTRUCTION: 1) THE CONTRACTOR WILL NEED TO MAKE A REQUEST FOR A NIGHTTIME NOISE VARIANCE AS ALLOWED FOR IN SECTION 36-7.(5)C. OF THE DRMC AND 2) THE VARIANCE PROCESS NEEDS TO BE STARTED A MINIMUM OF TWO TO THREE MONTHS PRIOR TO THE DESIRED START DATE OF ANY WORK NEEDING TO OCCUR OUTSIDE OF THE EXEMPTED HOURS. ANY NOISE VARIANCE QUESTIONS SHOULD BE DIRECTED TO PAUL RIEDESEL, DEPARTMENT OF ENVIRONMENTAL HEALTH, DENVER COMMUNITY NOISE PROGRAM, (PHONE 720-865-5410; FAX 720-865-5532) A MINIMUN OF THREE MONTHS PRIOR TO THE START OF THE PROJECT.

COLORADO LICENSED RANDAL LAPSLEY 26785 PROFESSIONAL ENGINEER 11/26/18

TSIOUVARAS SIMMONS HOLDERNESS
CONSULTING ENGINEERS

FINAL SUBMITTAL - NOVEMBER 26, 2018

LimC
10/4/2018
3:31:51 PM
P:\1505480D - CCD 33rd Festival 35th\FESTIVAL STREET PROJECT\ROW\

Last Modification Date:	Init.:
Drawing File Name: 1505480D-GEN-04.dgn	
Horizontal Scale: 1:2	Vert. Scale: As Noted

Sheet Revisions

Date:	Comments	Init.

DEPARTMENT OF PUBLIC WORKS
201 WEST COLFAX AVENUE
DENVER, CO 80202
PHONE: (720) 913-4501
FAX: (720) 913-4544

As Constructed	
No. Revised:	
Revised:	
Void:	

FESTIVAL STREET
STANDARD NOTES

Designer:	CCL	Structure Numbers	
Detailer:	CCL		
Sheet Subset:	GEN	Subset Sheets:	2 of 3

Project No./Code	
-	
-	
Sheet Number	5

STANDARD NOTES

EROSION CONTROL

THE PERMITTEE SHALL ENSURE THAT ALL POTENTIAL POLLUTANTS GENERATED DURING DEMOLITION OR CONSTRUCTION WORK ASSOCIATED WITH THIS PERMIT, BE PREVENTED FROM DISCHARGE TO STORMWATER CONVENYANCE SYSTEMS IN THE VICINITY OF THIS PROJECT SITE.

THE OWNER, SITE DEVELOPER, CONTRACTOR AND/OR THEIR AUTHORIZED AGENTS SHALL PREVENT SEDIMENT, DEBRIS AND ALL OTHER POLLUTANTS FROM ENTERING THE STORM SEWER SYSTEM DURING ALL DEMOLITION, EXCAVATION, TRENCHING, BORING, GRADING, OR OTHER CONSTRUCTION OPERATIONS THAT ARE PART OF THIS PROJECT. THE OWNER, SITE DEVELOPER, CONTRACTOR AND/OR THEIR AUTHORIZED AGENTS SHALL BE HELD RESPONSIBLE FOR REMEDIATION OF ANY ADVERSE IMPACTS TO THE MUNICIPAL SEPARATE STORM SEWER SYSTEM, RECEIVING WATERS, WATERWAYS, WETLANDS, AND OR OTHER PUBLIC OR PRIVATE PROPERTIES, RESULTING FROM WORK DONE AS PART OF THIS PROJECT.

THE OWNER, SITE DEVELOPER, CONTRACTOR AND/OR THEIR AUTHORIZED AGENTS SHALL REMOVE ALL SEDIMENT, MUD, CONSTRUCTION DEBRIS, OR OTHER POTENTIAL POLLUTANTS THAT MAY HAVE BEEN DISCHARGED TO OR, ACCUMULATE IN THE FLOWLINES, STORM DRAINAGE APPURTENANCES, AND PUBLIC RIGHTS OF WAYS OF THE CITY AND COUNTY OF DENVER AS A RESULT OF CONSTRUCTION ACTIVITIES ASSOCIATED WITH THIS PERMIT. ALL REMOVALS SHALL BE CONDUCTED IN A TIMELY MANNER.

THE OWNER, SITE DEVELOPER, CONTRACTOR AND/OR THEIR AUTHORIZED AGENTS SHALL INSURE THAT ALL LOADS OF CUT AND FILL MATERIAL IMPORTED TO OR EXPORTED FROM THIS SITE SHALL BE PROPERLY COVERED TO PREVENT LOSS OF THE MATERIAL DURING TRANSPORT ON PUBLIC RIGHTSOF WAY. "(SEC.49-552;REVISED MUNICPAL CODE)

THE USE OF REBAR TO ANCHOR BEST MANAGEMENT PRACTICES IS PROHIBITED. STEEL FENCE POSTS MAY BE USED ON A CASE BY CASE BASIS AND REQUIRES APPROVAL FROM THE CITY AND COUNTY OF DENVER SWMP REVIEWER OR THE STORMWATER ENFORCEMENT INVESTIGATOR PRIOR TO INSTALLATION.

THE CONSTRUCTION ACTIVITIES STORMWATER DISCHARGE PERMIT (STATE AND LOCAL) ARE REQUIRED AND IT IS THE CONTRACTOR'S RESPONSIBILITY TO OBTAIN THE PERMITS. APPROVED COPIES OF ALL REQUIRED PERMITS MUST BE SUBMITTED TO THE CITY CONSTRUCTION PROJECT MANAGER PRIOR TO START OF CONSTRUCTION.

THE PERMITTEE SHALL IMPLEMENT THE FOLLOWING BEST MANAGEMENT PRACTICES (BMPS) ON SITE DURING CONSTRUCTION:

1. VEHICLE TRACKING CONTROL: THIS BMP IS REQUIRED AT ALL ACCESS POINTS FOR INGRESS/EGRSS FROM OFF-SITE IMPERVIOUS SURFACES TO A CONSTRUCTION SITE THAT ARE USED BY VEHICULAR TRAFFIC OR CONSTRUCTION EQUIPMENT.

2. INLET PROTECTION: THIS BMP IS REQUIRED ON ALL EXISTING OR PROPOSED STORM SEWER INLETS IN THE VICINITY OF THE CONSTRUCTION SITE THAT MAY RECEIVE SITE RUNOFF. THE BMP MUST BE APPROPRIATE TO THE TYPE OF STORM INLET AND APPROPRIATE FOR THE GROUND SURFACE AT THE INLET.

3. INTERIM SITE STABILIZATION: THIS BMP IS REQUIRED TO PROVIDE A MEASURE FOR PREVENTING THE DISCHARGE OF SEDIMENT FROM CONSTRUCTION SITES WHERE OVERLOT GRADING OR OTHER SITE DISTURBANCE HAS OCCURRED. THIS BMP IS PARTICULARLY NECESSARY ON SITES WHERE CONSTRUCTION ACTIVITIES/DISTURBANCE WILL BE LIMITED TO SMALL AREAS OF THE PROJECT SITE. ACCEPTABLE BMPS INCLUDE:
   A) PRESERVING EXISTING VEGETATION
   B) SEEDING AND PLANTING
   C) MULCHING
   D) MULCHING AND SEEDING
   E) TEMPORARY/PERMANENT RE-VEGETATION OPERATIONS
   F) CHEMICAL SOIL STABILIZER APPLICATION (REQUIRES WMD APPROVAL)

4. WASTE MANAGEMENT/CONTAINMENT: THIS BMP REQUIRES THAT ALL CONSTRUCTION WASTES, FUELS, LUBRICANTS, CHEMICAL WASTES, TRASH, SANITARY WASTES, CONTAMINATED SOILS OR DEBRIS SHALL BE CONTAINED ON SITE, PROTECTED FROM CONTACT WITH PRECIPITATION OR SURFACE RUNOFF, PERIODICALLY REMOVED FROM THE CONSTRUCTION SITE, AND PROPERLY DISPOSED OF.

5. SPILL PREVENTION /CONTAINMENT: THIS BMP DEFINES THE MEASURES PROPOSED FOR PREVENTING, CONTROLLING, OR CONTAINING SPILLS OF FUEL, LUBRICANTS, OR OTHER POLLUTANTS; AND PROTECTING POTENTIAL POLLUTANTS FROM CONTACT WITH PRECIPITATION OR RUNOFF.

6. CHUTE WASHOUT CONTAINMENT: WATER USED IN THE CLEANING OF CEMENT TRUCK DELIVERY CHUTES SHALL BE DISCHARGED INTO A PREDEFINED, BERMED CONTAINMENT AREA ON THE JOB SITE. THE REQUIRED CONTAINMENT AREA IS TO BE BERMED SO THAT WASH WATER IS TOTALLY CONTAINED. WASH WATER DISCHARGED INTO THE CONTAINMENT AREA SHALL BE ALLOWED TO INFILTRATE OR EVAPORATE. DRIED CEMENT WASTE IS REMOVED FROM THE CONTAINMENT AREA AND PROPERLY DISPOSED OF.
   A) SHOULD A PREDEFINED BERMED CONTAINMENT AREA NOT BE AVAILABLE DUE TO THE PROJECT SIZE, OR LACK OF AN AREA WITH A SUITABLE GROUND SURFACE FOR ESTABLISHING A CONTAINMENT AREA, PROPER DISPOSAL OF READY MIX WASHOUT AND RINSE OFF WATER AT THE JOB SITE SHALL CONFORM TO THE APPROVED TECHNIQUES AND PRACTICES IDENTIFIED IN THE COLORADO DEPARTMENT OF PUBLIC HEALTH & ENVIRONMENT'S TRAINING VIDEO ENTITLED "**BUILDING FOR A CLEANER ENVIRONMENT, READY MIX WASHOUT TRAINING**", AND ITS ACCOMPANYING MANUAL ENTITLED, "**READY MIX WASHOUT GUIDEBOOK, VEHICLE AND EQUIPMENT WASHOUT AT CONSTRUCTION SITES**."
   B) THE DIRECT OR INDIRECT DISCHARGE OF WATER CONTAINING WASTE CEMENT TO THE STORM SEWER SYSTEM IS **PROHIBITED** (SEC.56-102A, C; REVISED MUNICIPAL CODE, CITY AND COUNTY OF DENVER).
   C) INFORMATION ABOUT, OR COPIES OF THE VIDEO AND TRAINING MANUAL ARE AVAILABLE FROM THE WATER QUALITY CONTROL DIVISION, COLORADO DEPARTMENT OF PUBLIC HEALTH & ENVIRONMENT, 4300 CHERRY CREEK DRIVE SOUTH, DENVER, COLORADO 80222-1530, (303) 692-3555.

7. STREET SWEEPING: THIS BMP REQUIRES THAT PAVED SURFACES WHICH ARE ADJACENT TO CONSTRUCTION SITES BE SWEPT IN A TIMELY MANNER WHEN SEDIMENT AND OTHER MATERIALS ARE TRACKED OR DISCHARGED ON TO THEM. EITHER SWEEPING BY HAND OR USE OF STREET SWEEPERS IS ACCEPTABLE. STREET SWEEPERS USING WATER WHILE SWEEPING IS PREFERRED IN ORDER TO MINIMIZE DUST. FLUSHING OFF PAVED SURFACES WITH WATER IS PROHIBITED.

8. PERIMETER CONTROL: THIS BMP REQUIRES THAT A CONSTRUCTION SITE INSTALL A PERIMETER CONTROL MEASURE ALONG THE EDGE OF THE CONSTRUCTION SITE, TO PREVENT, OR FILTER THE DISCHARGE OF SURFACE RUNOFF FROM THE CONSTRUCTION SITE. THE TYPE OF PERIMETER CONTROL USED SHALL BE DETERMINED BASED ON SITE CONDITIONS AND LOCATION. MAINTENANCE AND REPAIR OF THE CONTROL MEASURE SHALL OCCUR AS NEEDED, IN A TIMELY MANNER.

9. STOCK PILES: SOILS THAT WILL BE STOCKPILED FOR MORE THAN THIRTY (30) DAYS SHALL BE PROTECTED FROM WIND AND WATER EROSION WITHIN FOURTEEN (14) DAYS OF STOCKPILE CONSTRUCTION. STABILIZATION OF STOCKPILES LOCATED WITHIN 100 FEET OF RECEIVING WATERS, OR WITH SLOPES 3 TO 1 OR GREATER SHALL BE COMPLETED WITHIN SEVEN (7) DAYS FOLLOWING STOCKPILE CONSTRUCTION. STABILIZATION AND PROTECTION OF THE STOCKPILE MAY BE ACCOMPLISHED BY ANY OF THE FOLLOWING: MULCHING, TEMPORARY/PERMANENT REVEGETATION OPERATIONS, CHEMICAL SOIL STABILIZER APPLICATION (REQUIRES DENVER PUBLIC WORKS APPROVAL), OR EROSION CONTROL MATTING/GEOTEXTILES. IF STOCKPILES ARE LOCATED WITHIN 100 FEET OF RECEIVING WATERS, A DRAINAGEWAY OR THE SITE PERIMETER, ADDITIONAL SEDIMENT CONTROLS SHALL BE REQUIRED.

10. SAW CUTTING OPERATIONS: "THE CONTRACTOR SHALL PROTECT ALL STORM SEWER FACILITIES ADJACENT TO ANY LOCATION WHERE PAVEMENT CUTTING OPERATIONS INVOLVING WHEEL CUTTING, SAW CUTTING, OR ABRASIVE WATER JET CUTTING ARE TO TAKE PLACE. THE CONTRACTOR SHALL REMOVE AND PROPERLY DISPOSE OF ALL WASTE PRODUCTS GENERATED BY SAID CUTTING OPERATIONS ON A DAILY BASIS OR AS NEEDED THROUGHOUT THE WORK DAY. THE DISCHARGE OF ANY WATER CONTAMINATED BY WASTE PRODUCTS FROM CUTTING OPERATIONS TO THE STORM SEWER SYSTEM IS PROHIBITED." (SEC.56-102A, C; REVISED MUNICIPAL CODE, CITY AND COUNTY OF DENVER)

11. STRUCTURAL CONTROLS: DEVELOPMENT SITES THAT ARE REQUIRED TO PROVIDE DETENTION AND WATER QUALITY ENHANCEMENT FACILITIES FOR STORM RUNOFF NEED TO INSTALL THE DETENTION FACILITIES EARLY IN THE CONSTRUCTION BUILD-OUT OF THE SITE. PROJECTS THAT ARE USING UNDERGROUND DETENTION ARE REQUIRED TO INSTALL A PRETREATMENT STRUCTURE OR SEDIMENTATION BASINS AS A MEANS OF TREATING POTENTIALLY POLLUTED STORM WATER PRIOR TO ENTERING THE DETENTION STRUCTURE. USE OF THESE STRUCTURES IS REQUIRED FOR ENTRAPPING SEDIMENT AND CONSTRUCTION DEBRIS DURING THE ACTIVE CONSTRUCTION PHASE OF THE PROJECT. THE NARRATIVE SECTION OF THE MANAGEMENT PLAN IS ALSO REQUIRED TO ADDRESS OPERATION AND MAINTENANCE OF THE STRUCTURAL CONTROLS BEING USED AS AN ACTIVE CONSTRUCTION BMP

COLORADO LICENSED
RANDAL LARSEY
28785
PROFESSIONAL ENGINEER
11/26/18

TSIOUVARAS SIMMONS HOLDERNESS
CONSULTING ENGINEERS

FINAL SUBMITTAL - NOVEMBER 26, 2018

Last Modification Date:	Init.:		
Drawing File Name: 1505480D-GEN-05.dgn			
Horizontal Scale: 1:2	Vert. Scale: As Noted		

Sheet Revisions		
Date:	Comments	Init.

DEPARTMENT OF PUBLIC WORKS
201 WEST COLFAX AVENUE
DENVER, CO 80202
PHONE: (720) 913-4501
FAX: (720) 913-4544

As Constructed
No Revisions:
Revised:
Void:

FESTIVAL STREET
STANDARD NOTES

Designer:	CCL	Structure Numbers	
Detailer:	CCL		
Sheet Subset:	GEN	Subset Sheets:	3 of 3

Project No./Code
-
-
Sheet Number 6

Charlie.Lim
8/10/2018
10:05:47 AM
P:\1505480D - CCD 33rd Festival 35th\FESTIVAL STREET PROJECT\RDWY\

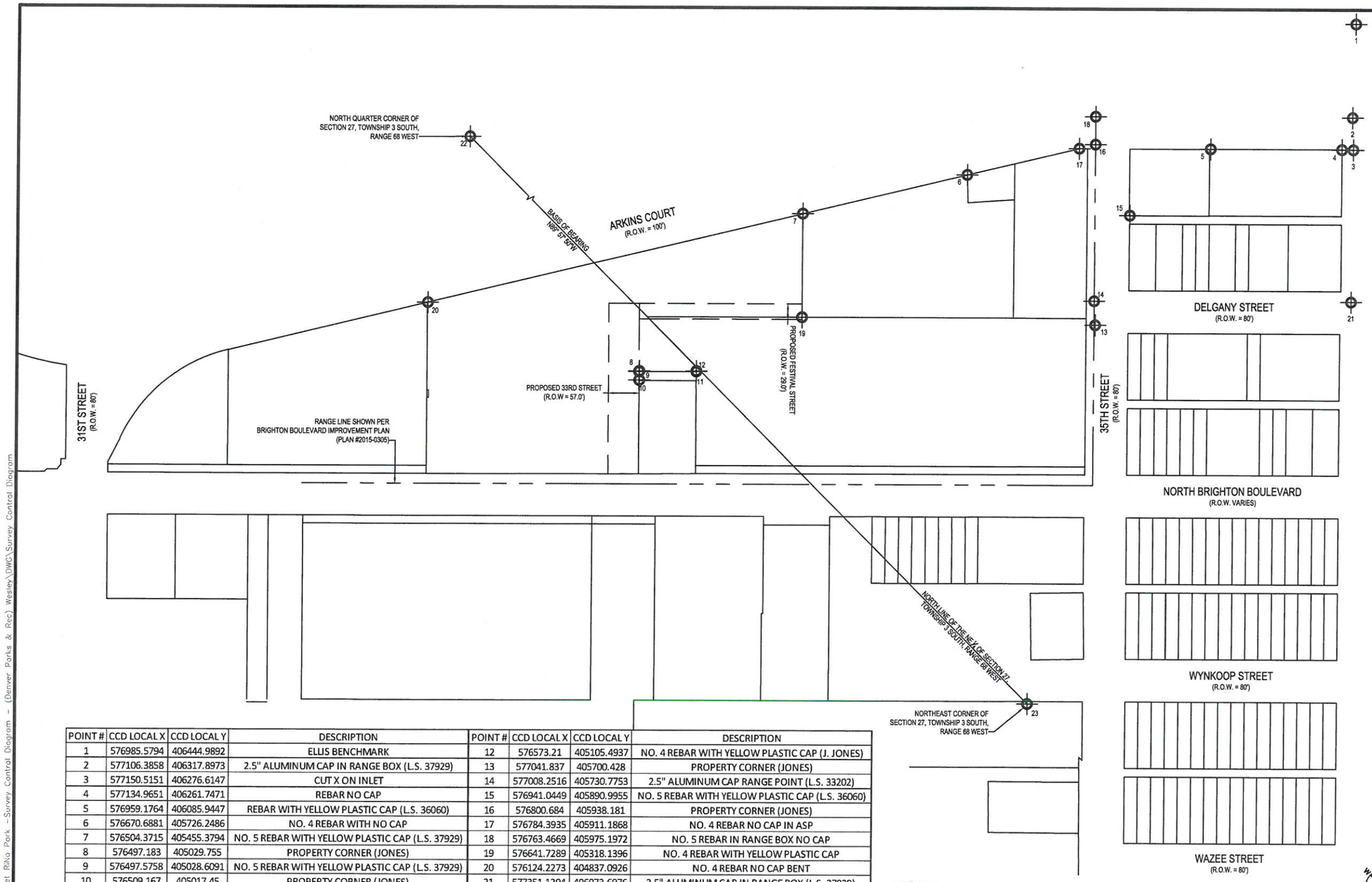

POINT #	CCD LOCAL X	CCD LOCAL Y	DESCRIPTION
1	576985.5794	406444.9892	ELLIS BENCHMARK
2	577106.3858	406317.8973	2.5" ALUMINUM CAP IN RANGE BOX (L.S. 37929)
3	577150.5151	406276.6147	CUT X ON INLET
4	577134.9651	406261.7471	REBAR NO CAP
5	576959.1764	406085.9447	REBAR WITH YELLOW PLASTIC CAP (L.S. 36060)
6	576670.6881	405726.2486	NO. 4 REBAR WITH NO CAP
7	576504.3715	405455.3794	NO. 5 REBAR WITH YELLOW PLASTIC CAP (L.S. 37929)
8	576497.183	405029.755	PROPERTY CORNER (JONES)
9	576497.5758	405028.6091	NO. 5 REBAR WITH YELLOW PLASTIC CAP (L.S. 37929)
10	576509.167	405017.45	PROPERTY CORNER (JONES)
11	576573.469	405104.9375	NO. 5 REBAR WITH YELLOW PLASTIC CAP (L.S. 37929)

POINT #	CCD LOCAL X	CCD LOCAL Y	DESCRIPTION
12	576573.21	405105.4937	NO. 4 REBAR WITH YELLOW PLASTIC CAP (J. JONES)
13	577041.837	405700.428	PROPERTY CORNER (JONES)
14	577008.2516	405730.7753	2.5" ALUMINUM CAP RANGE POINT (L.S. 33202)
15	576941.0449	405890.9955	NO. 5 REBAR WITH YELLOW PLASTIC CAP (L.S. 36060)
16	576800.684	405938.181	PROPERTY CORNER (JONES)
17	576784.3935	405911.1868	NO. 4 REBAR NO CAP IN ASP
18	576763.4669	405975.1972	NO. 5 REBAR IN RANGE BOX NO CAP
19	576641.7289	405318.1396	NO. 4 REBAR WITH YELLOW PLASTIC CAP
20	576124.2273	404837.0926	NO. 4 REBAR NO CAP BENT
21	577351.1204	406073.6976	2.5" ALUMINUM CAP IN RANGE BOX (L.S. 37929)
22	575959.042	405111.655	2.5" ALUMINUM CAP (L.S. 33204)
23	577458.655	405110.708	CHISELED "+" IN STONE

LEGEND

FOUND MONUMENT AS DESCRIBED
SECTION LINE
RANGE LINE
PROPOSED R.O.W.

GENERAL NOTES:

1. FIELD WORK PERFORMED IN APRIL 2018.

2. BASIS OF BEARINGS: BASIS OF BEARING IS THE NORTH LINE OF THE NORTHEAST QUARTER (NE¼) OF SECTION 27, TOWNSHIP 3 SOUTH, RANGE 68 WEST OF THE SIXTH PRINCIPAL MERIDIAN BETWEEN THE FOUND 2.5" CAP (LS 33204) AT THE NORTH QUARTER CORNER (N¼) OF SAID SECTION 27, TOWNSHIP 3 SOUTH, RANGE 68 WEST OF THE SIXTH PRINCIPAL MERIDIAN AND THE FOUND CUT "+" IN STONE AT THE NORTHEAST QUARTER (NE¼) OF OF SAID SECTION 27, TOWNSHIP 3 SOUTH, RANGE 68 WEST OF THE SIXTH PRINCIPAL MERIDIAN, WITH AN ASSUMED BEARING OF N89°57'50"W.
3. ALL LINEAR MEASUREMENTS WERE TAKEN USING THE U.S. SURVEY FOOT. THE CONVERSION FACTOR IS : ONE METER EQUALS 3937/1200 FEET.

BENCHMARK STATEMENT:

CITY AND COUNT OF DENVER BENCHMARK ELLIS, A 1-1/2" BRASS CAP LOCATED AT THE NORTHWEST CORNER OF ARKINS COURT AND 36TH STREET ON TOP OF FLAGSTONE OUTFALL INTO PLATTE RIVER (EAST SIDE).
NAVD88 VERTICAL ELEVATION: 5162.35'
CCD LOCAL X: 576985.7660'
CCD LOCAL Y: 406445.0620'

LEGAL NOTICE:

According to Colorado law, you must commence any legal action based upon any defect in this Land Survey Plat within three years after you first discovered such defect. In no event may any legal action based upon any defect in this Land Survey Plat be commenced more than ten years from the date of certification shown hereon.

SURVEYOR'S CERTIFICATE:

I, KARL W. FRANKLIN, A LICENSED PROFESSIONAL LAND SURVEYOR IN THE STATE OF COLORADO HEREBY CERTIFY THAT:

- THIS SURVEY IS A TRUE AND CORRECT LAND SURVEY PLAT AND WAS PREPARED BY ME OR UNDER MY DIRECT SUPERVISION AND RESPONSIBLE CHARGE AND COMPLIES WITH CRS 38-51-106.
- THIS SURVEY IS BASED UPON THIS SURVEYOR'S KNOWLEDGE, INFORMATION AND BELIEF.
- THIS IS IN ACCORDANCE WITH APPLICABLE STANDARDS OF PRACTICE.

THE USE OF THE WORD "CERTIFY" OR "CERTIFICATION" BY A LICENSED PROFESSIONAL LAND SURVEYOR IN THE PRACTICE OF LAND SURVEYING, CONSTITUTES AN OPINION REGARDING THOSE FACTS OF FINDINGS WHICH ARE THE SUBJECT OF THE CERTIFICATION, AND DOES NOT CONSTITUTE A WARRANTY OR GUARANTEE, EITHER EXPRESSED OR IMPLIED.

COLORADO LICENSED
KARL W. FRANKLIN
6/1/2018
37929
PROFESSIONAL LAND SURVEYOR

LTITUDE
LAND CONSULTANTS
CIVIL | SURVEY | PLANNING | LANDSCAPE

0 100 200 400 600
(IN FEET)
1 inch = 200 ft. (11" x 17")

DRAFT SUBMITTAL - MARCH 9, 2018

WESLEY.CORDES
1/27/2016
3:27:05 PM
Y:\Projects\2018 Projects\18-061 – Festival Street RiNo Park – Survey Control Diagram – (Denver Parks & Rec) Wesley\DWG\Survey Control Diagram

Last Modification Date:	Init.:
Drawing File Name: 33rd & Festival – Survey Control Diagram	
Horizontal Scale: 1" = 200'	Vert. Scale: NO SCALE

Sheet Revisions		
Date:	Comments	Init.
1/27/16	Addressed CCD Comments	WSC
5/8/18	Updated Found Monuments	CDF
5/11/18	Updated Found Monuments	WSC

DEPARTMENT OF PUBLIC WORKS
201 WEST COLFAX AVENUE
DENVER, CO 80202
PHONE: (720) 913-4501
FAX: (720) 913-4544

As Constructed
No Revisions:
Revised:
Void:

33RD STREET AND FESTIVAL STREET
SURVEY CONTROL DIAGRAM

Designer:	WSC	Structure Numbers	
Detailer:	WSC		
Sheet Subset:	SURVEY CONTROL	Subset Sheets:	1 of 1

Project No./Code
–
–
Sheet Number 7

INDEX			ITEM NO.	ITEM DESCRIPTION	UNIT	ROADWAY						PROJECT TOTALS
BOOK	PAGE	SHEET				PLAN	AS CONST.	PLAN	AS CONST.	PLAN	AS CONST.	PLAN
			201	CLEARING AND GRUBBING	L S	1						1
			202	REMOVAL OF STRUCTURES AND OBSTRUCTIONS	L S	1						1
			202	REMOVAL OF WALL	LF	20						20
			202	REMOVAL OF CONCRETE PAVEMENT	SY	7						7
			202	REMOVAL OF ASPHALT MAT	SY	663						663
			202	REMOVAL OF FENCE	LF	270						270
			203	UNCLASSIFIED EXCAVATION	CY	468						468
			203	EMBANKMENT MATERIAL (COMPLETE IN PLACE)	CY	1,280						1,280
			203	MUCK EXCAVATION	CY	50						50
			203	COMBINATION LOADER	HOUR	8						8
			203	POTHOLING	HOUR	4						4
			207	TOPSOIL	CY	98						98
			208	SILT FENCE	LF	578						578
			208	ROCK SOCK	EACH	7						7
			208	CONCRETE WASHOUT STRUCTURE	EACH	1						1
			208	STORM DRAIN INLET PROTECTION	EACH	2						2
			208	VEHICLE TRACKING PAD	EACH	1						1
			208	EROSION CONTROL SUPERVISOR	HOUR	40						40
			210	ADJUST MANHOLE	EACH	1						1
			210	MODIFY MANHOLE	EACH	1						1
			210	ADJUST VALVE BOX	EACH	1						1
			210	ADJUST VALVE BOX (SPECIAL) (SANITARY CLEAN-OUT)	EACH	1						1
			212	SEEDING (NATIVE)	ACRE	0.12						0.1
			250	ENVIRONMENTAL HEALTH AND SAFETY MANAGEMENT	L S	1						1.0
			250	HEALTH AND SAFETY OFFICER	HOUR	80						80.0
			250	CERTIFIED ASBESTOS BUILDING INSPECTOR	HOUR	120						120.0
			250	MATERIAL SAMPLING AND DELIVERY	EACH	2						2.0
			250	MATERIAL HANDLING (STOCKPILE)	CY	100						100.0
			250	HAUL NON-HAZARDOUS WASTE	CY	468						468.0
			304	AGGREGATE BASE COURSE (CLASS 6)	CY	35						34.9
			403	HOT MIX ASPHALT (GRADING S) (75) (PG 64-22)	TON	329						329
			403	HOT MIX ASPHALT (GRADING SX) (75) (PG 64-22)	TON	219						219
			411	EMULSIFIED ASPHALT (SLOW-SETTING)	GAL	66						66
			608	CONCRETE SIDEWALK (6 INCH)	SY	318						318
			608	BITUMINOUS SIDEWALK	TON	2						2
			608	CONCRETE CURB RAMP	SY	8						8
			609	4" MOUNTABLE CURB	LF	557						557
			609	6" CURB & GUTTER - 2' CATCH PAN	LF	23						23
			609	GUTTER (SPECIAL)	LF	534						534
			609	CURB TYPE 6 (SECTION M)	LF	38						38
			614	SIGN PANEL (CLASS I)	EACH	2						2
			614	SIGN POST (2 X 2 INCH TUBING)	EACH	2						2
			620	SANITARY FACILITY	EACH	1						1
			625	CONSTRUCTION SURVEYING	L S	1						1
			626	MOBILIZATION	L S	1						1
			627	24" SOLID WHITE PLASTIC TAPE (PREFORMED THERMOPLASTIC)	LF	10						10
			630	TRAFFIC CONTROL INSPECTION	DAY	25						25
			630	TRAFFIC CONTROL MANAGEMENT	DAY	10						10
			630	END OF ROADWAY BARRICADE (STD DWG 16.2.15)	EACH	1						1
			630	TRAFFIC CONE	EACH	10						10

FINAL SUBMITTAL - NOVEMBER 26, 2018

COLORADO LICENSED GENERAL LAND SURVEYOR 28785 PROFESSIONAL ENGINEER

TSIOUVARAS SIMMONS HOLDERNESS
CONSULTING ENGINEERS

Last Modification Date:	Init.:
Drawing File Name: 1505480D-DES_SAQ.dgn	
Horizontal Scale: 1:2	Vert. Scale: As Noted

Sheet Revisions

Date:	Comments	Init.

DEPARTMENT OF PUBLIC WORKS
201 WEST COLFAX AVENUE
DENVER, CO 80202
PHONE: (720) 913-4501
FAX: (720) 913-4544

As Constructed

No Revisions:	
Revised:	
Void:	

FESTIVAL STREET
SUMMARY OF APPROXIMATE QUANTITIES

Designer:	CCL	Structure Numbers	
Detailer:	CCL		
Sheet Subset:	SAQ	Subset Sheets:	1 of 1

Project No./Code
-
-
Sheet Number 8

LimC
11/27/2018
10:21:50 AM
P:\1505480D - CCD_33rd Festival_35th\FESTIVAL STREET PROJECT\ROW\

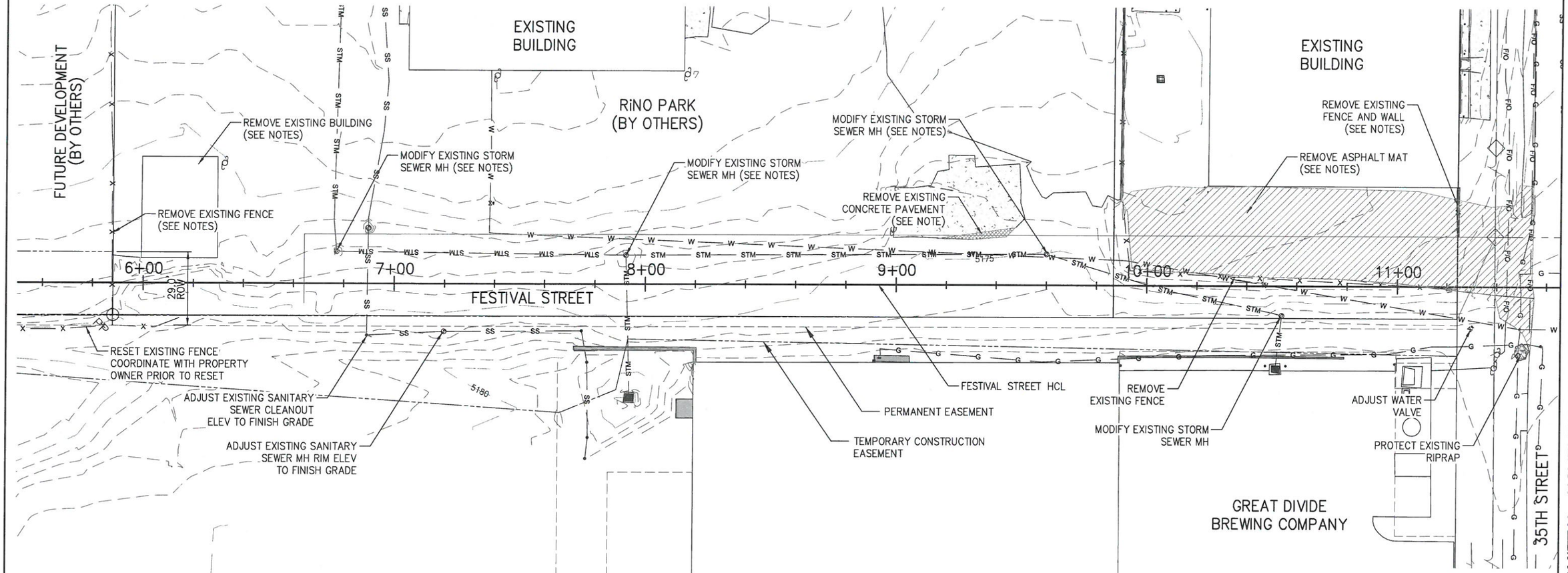

PROPOSED FUTURE REDEVELOPMENT (BY OTHERS)

NOTES:

1. THE FESTIVAL STREET IS BEING CONSTRUCTED IN CONJUNCTION WITH THE RIVER NORTH PARK PROJECT. REFER TO THE RIVER NORTH PARK PLANS DATED APRIL, 2018. SOME ITEMS REQUIRED TO CONSTRUCT FESTIVAL STREET SUCH AS REMOVAL ITEMS MAY BE SHOWN ON THE RIVER NORTH PARK PLANS. THE CONTRACTOR SHALL COORDINATE THE WORK BETWEEN PROJECTS. CONFLICTS BETWEEN THE PLANS SHALL BE BROUGHT TO THE ATTENTION OF THE PROJECT ENGINEER.
2. SEE RIND PARK PLANS FOR INFORMATION ON EXISTING AND PROPOSED WATERLINE.

LEGEND:

EXISTING CONTOURS (1 FT. INTERVAL)

COLORADO LICENSED
RANDAL LAPSLEY
28785
11/20/18
PROFESSIONAL ENGINEER

0 20 40

TSIOUVARAS SIMMONS HOLDERNESS
CONSULTING ENGINEERS

FINAL SUBMITTAL - NOVEMBER 26, 2018

Last Modification Date:	Init.:
Drawing File Name: 1505480D-REM-01.dgn	
Horizontal Scale: 1:40	Vert. Scale: As Noted

Sheet Revisions

Date:	Comments	Init.

DEPARTMENT OF PUBLIC WORKS
201 WEST COLFAX AVENUE
DENVER, CO 80202
PHONE: (720) 913-4501
FAX: (720) 913-4544

As Constructed

No Revisions:	
Revised:	
Void:	

FESTIVAL STREET REMOVAL PLAN

Designer:	CCL	Structure Numbers	
Detailer:	CCL		
Sheet Subset:	REMOVAL	Subset Sheets:	1 of 1

Project No./Code

	-
	-
Sheet Number	9

LimC
8/13/2018
10:40:18 AM
P:\1505480D - CCD 33rd Festival 35th\FESTIVAL STREET PROJECT\RDWY\

LEGEND:

HCL	–	HORIZONTAL CONTROL LINE
PGL	–	PROFILE GRADE LINE
PSS	–	POINT OF SLOPE SELECTION
HP	–	HIGH POINT
VAR	–	VARIABLE
TYP	–	TYPICAL
CR	–	CURB RETURN
LT	–	LEFT
RT	–	RIGHT
EXIST	–	EXISTING
PROP	–	PROPOSED
O	–	VERTICAL ALIGNMENT CONTROL POINTS
?	–	SEE CITY OF DENVER STANDARD DETAIL FOR ADDITIONAL PAVEMENT DETAILS
ϕ	–	ALL DISTURBED SLOPE AND NEW SLOPES SHALL HAVE TOPSOIL AND BE SEEDED AND MULCHED.

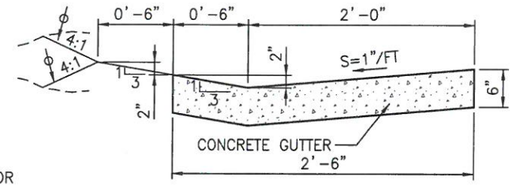

GUTTER (SPECIAL)
(STA. 6+56.78 TO STA. 11+15)

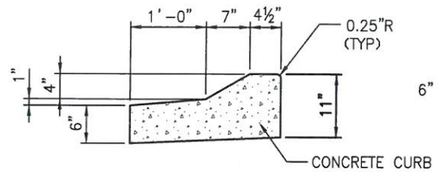

4" MOUNTABLE CURB
(1' SPILL PAN)

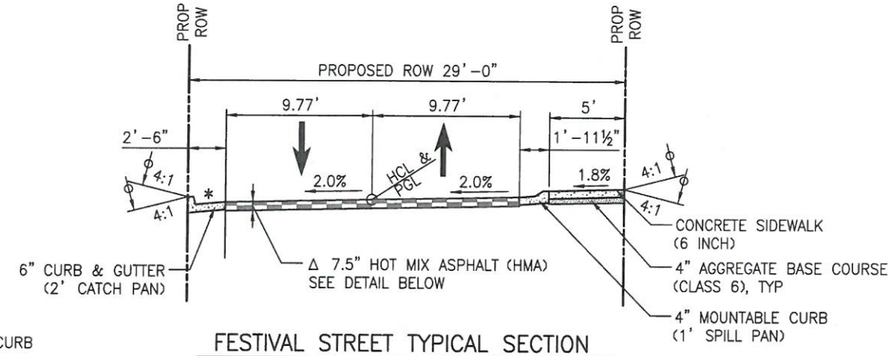

FESTIVAL STREET TYPICAL SECTION
STA. 5+65 TO STA. 5+96.34
(* SEE RINO PARK PLANS FOR DETAIL OF 4" SPECIAL CURB FROM STA 5+96.34 TO 6+56.78)

TYPICAL SECTION NOTES:

1. BREAK POINTS IN SLOPES SHALL BE ROUNDED DURING CONSTRUCTION FOR A PLEASING APPEARANCE.
2. SEE GEOMETRIC LAYOUT SHEETS FOR HORIZONTAL CONTROL LINE (HCL) DATA. SEE ROADWAY PLAN AND PROFILES FOR PROFILE GRADE LINE (PGL) AND CROSS SLOPE TRANSITION DATA.
3. A TACK COAT IS REQUIRED BETWEEN LAYERS OF BITUMINOUS PAVEMENT AND WHERE BITUMINOUS PAVEMENT IS PLACED NEXT TO EDGES OF PAVEMENT. DILUTED EMULSIFIED ASPHALT FOR TACK COAT CONSISTS OF 1–PART EMULSIFIED AND 1–PART WATER. RATES OF APPLICATION SHALL BE AS DETERMINED BY THE ENGINEER AT THE TIME OF APPLICATION.
4. PAYMENT FOR ITEM 202 – REMOVAL OF ASPHALT MAT SHALL INCLUDE, IF ENCOUNTERED, THE REMOVAL OF ANY EXISTING CONCRETE PAVEMENT UNDER ASPHALT PAVEMENT TO BE REMOVED. SEE REMOVAL PLANS FOR LIMITS OF REMOVAL OF ASPHALT.
5. EXTEND FULL DEPTH ASPHALT PAVEMENT ON FESTIVAL STREET FROM STA 11+15 TO STA 11+55.52 WHERE TEMPORARY BITUMINOUS MOUNTABLE CURB IS LOCATED.
6. CONTRACTOR MAY USE MORE AND THINNER LIFTS OF HMA TO OBTAIN FINAL THICKNESS. MUST FOLLOW TS&D SECTION 12, AND ALWAYS OBTAIN REQUIRED COMPACTION ON ALL LIFTS FOR THE ENTIRE WORK.
7. CONTRACTOR OR CITY ENGINEER SHALL REVIEW THE GEOTECHNICAL ENGINEER'S REPORT FOR ON–SITE GRADING TO CONSTRUCT A UNIFORM SUBGRADE CONDITION BEFORE ASPHALT IS PAVED. REFER TO PROJECT SPECIFICATIONS FOR IMPORTED EMBANKMENT MATERIAL MINIMUM R VALUE.

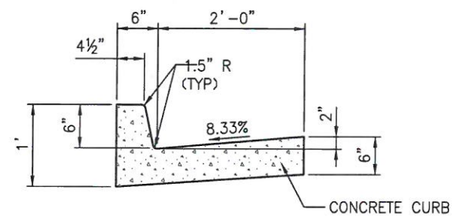

6" CURB AND GUTTER
(2' CATCH PAN)

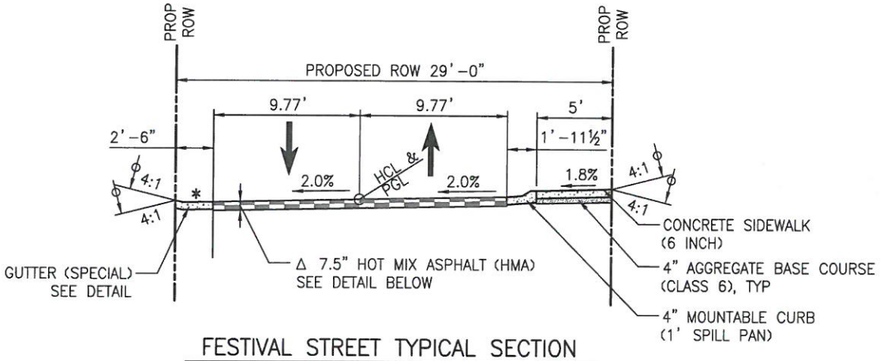

FESTIVAL STREET TYPICAL SECTION
STA. 6+56.78 TO STA. 11+22.23
(* SEE RINO PARK PLANS FOR DETAIL OF 4" SPECIAL CURB FROM STA 5+96.34 TO 6+56.78)

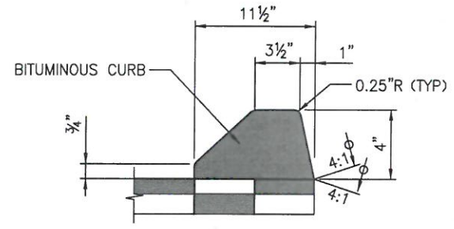

CURB TYPE 6 (SECTION M)
4" MOUNTABLE

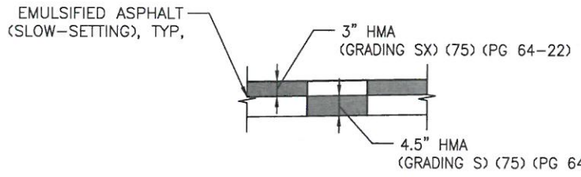

7.5" FULL DEPTH HMA LIFT DIAGRAM

COLORADO LICENSED
RANDAL LAPLEY
28785
11/20/18
PROFESSIONAL ENGINEER

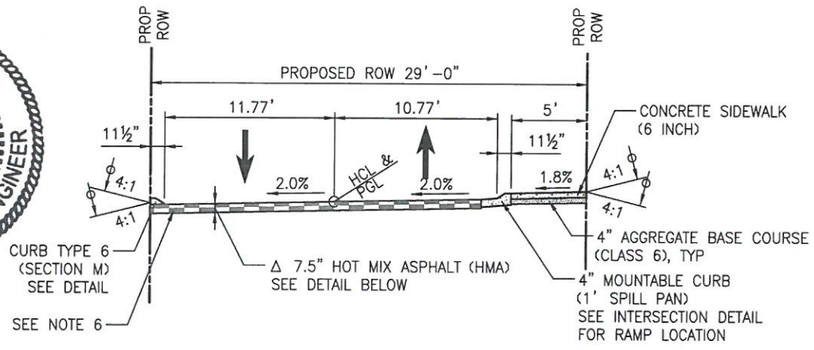

FESTIVAL STREET TYPICAL SECTION
STA. 11+22.23 TO STA. 11+54.00

TSIOUVARAS SIMMONS HOLDERNESS
CONSULTING ENGINEERS

FINAL SUBMITTAL - NOVEMBER 26, 2018

Last Modification Date:	Init.:		
Drawing File Name: 1505480D-RD-TYP-01.dgn			
Horizontal Scale: 1:10	Vert. Scale: As Noted		

Sheet Revisions

Date:	Comments	Init.

DEPARTMENT OF PUBLIC WORKS
201 WEST COLFAX AVENUE
DENVER, CO 80202
PHONE: (720) 913–4501
FAX: (720) 913–4544

As Constructed
No Revisions:
Revised:
Void:

33RD STREET AND FESTIVAL STREET
TYPICAL ROADWAY SECTIONS

Designer:	CCL	Structure Numbers	
Detailer:	CCL		
Sheet Subset:	TYPICAL	Subset Sheets:	1 of 1

Project No./Code
–
–
Sheet Number 10

LimC
10/4/2018
10:14:16 AM
P:\1505480D – CCD 33rd Festival 35th\FESTIVAL STREET PROJECT\RDWY\

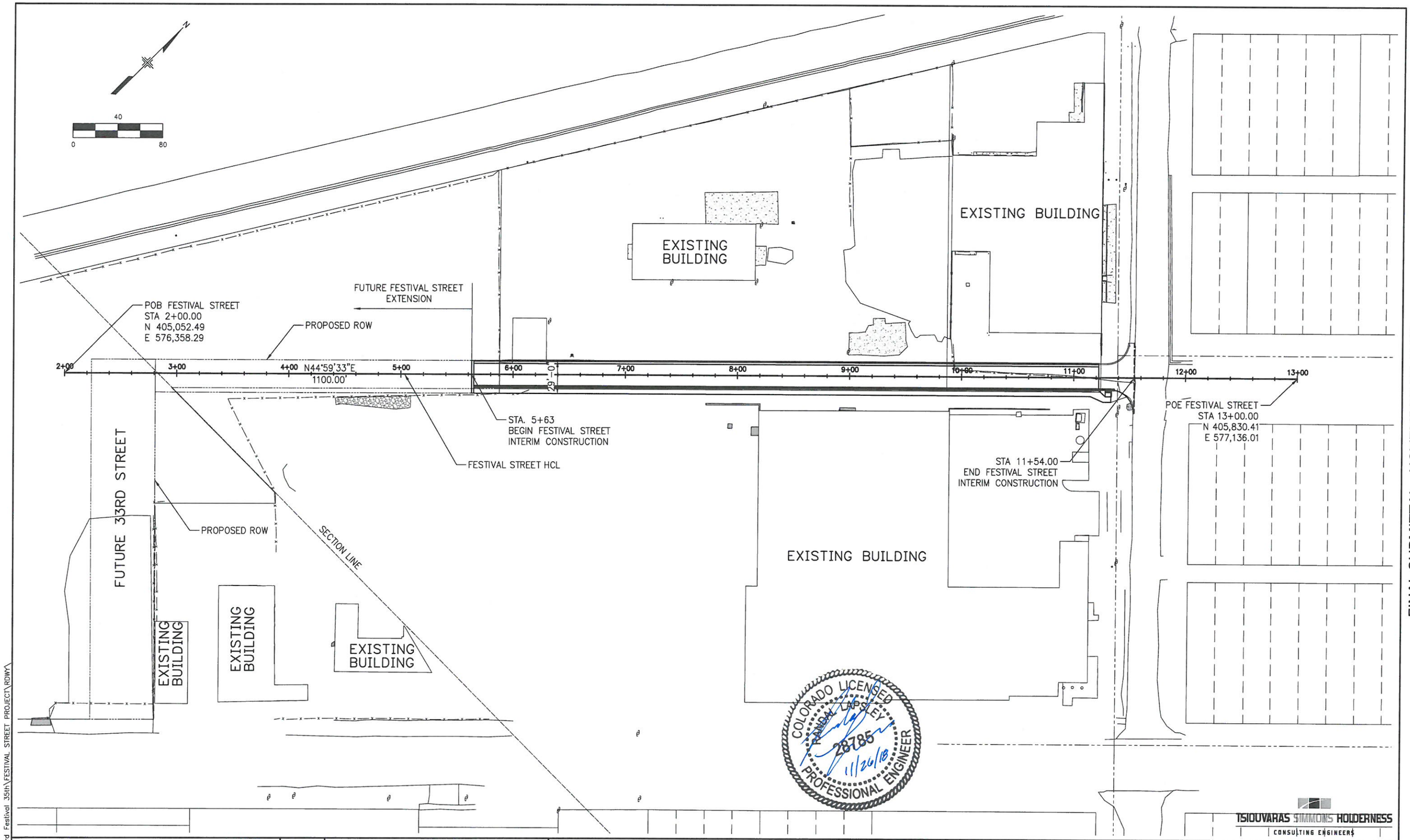

TSIOUVARAS SIMMONS HOLDERNESS
CONSULTING ENGINEERS

Last Modification Date:	Init.:
Drawing File Name: 1505480D-GEOM-01.dgn	
Horizontal Scale: 1:80	Vert. Scale: As Noted

Sheet Revisions		
Date:	Comments	Init.

DEPARTMENT OF PUBLIC WORKS
201 WEST COLFAX AVENUE
DENVER, CO 80202
PHONE: (720) 913-4501
FAX: (720) 913-4544

As Constructed
No Revisions:
Revised:
Void:

FESTIVAL STREET
OVERALL GEOMETRIC LAYOUT

Designer:	CCL	Structure Numbers	
Detailer:	CCL		
Sheet Subset:	GEOM	Subset Sheets:	1 of 1

Project No./Code
-
-
Sheet Number 11

FINAL SUBMITTAL - NOVEMBER 26, 2018

LimC
10/4/2018
10:36:55 AM
P:\1505480D - CCD 33rd Festival 35th\FESTIVAL STREET PROJECT\ROW\

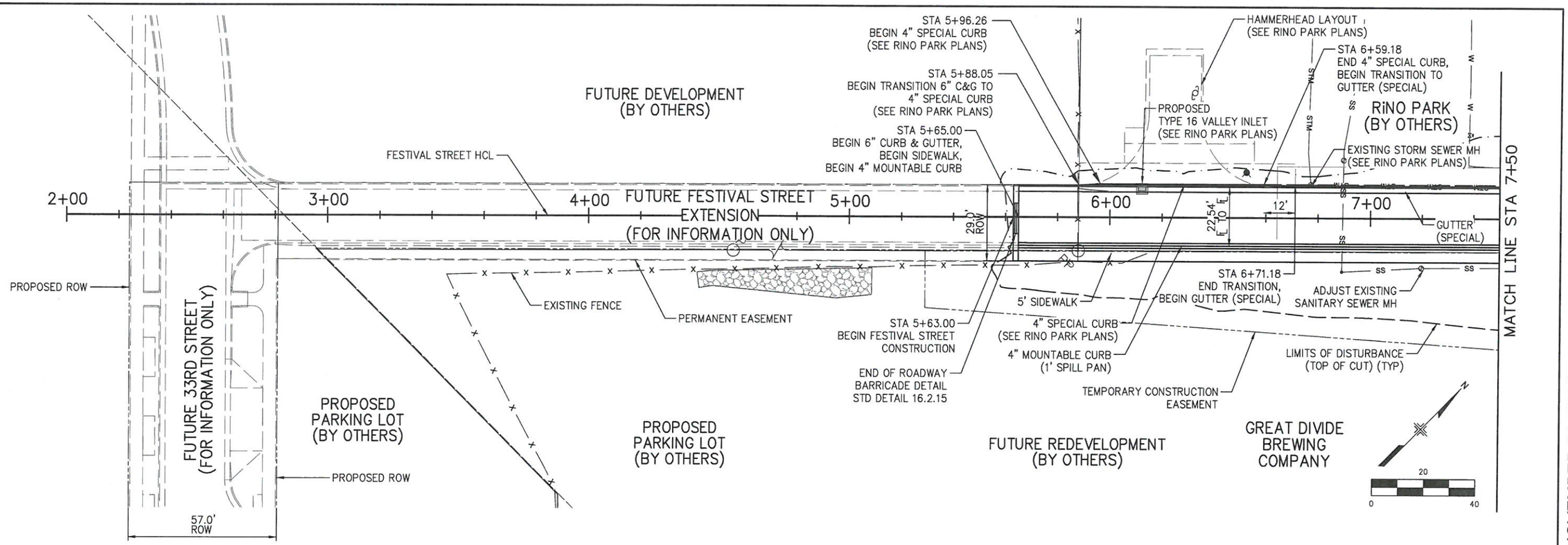

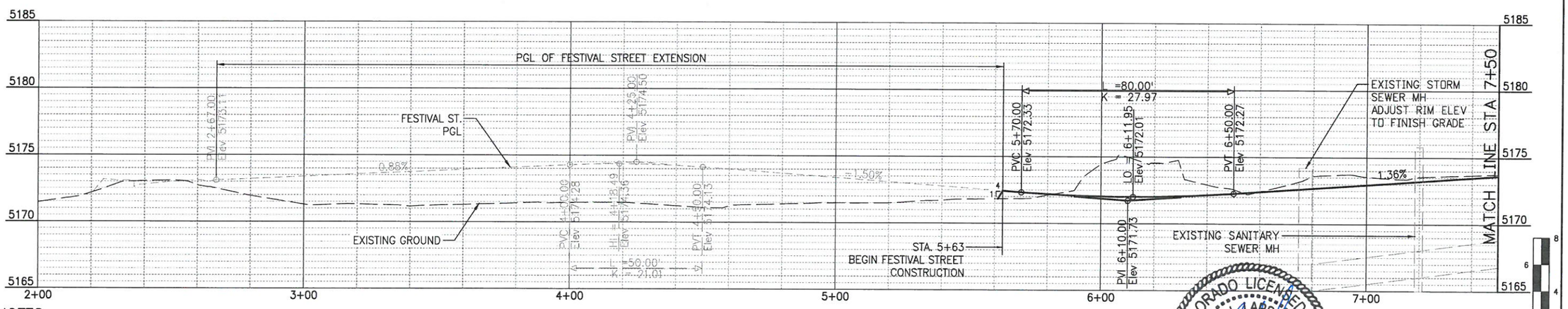

NOTES:

1. THE FESTIVAL STREET IS BEING CONSTRUCTED IN CONJUNCTION WITH THE RIVER NORTH PARK PROJECT. REFER TO THE RIVER NORTH PARK PLANS DATED APRIL, 2018. SOME ITEMS REQUIRED TO CONSTRUCT FESTIVAL STREET MAY BE SHOWN ON THE RIVER NORTH PARK PLANS. THE CONTRACTOR SHALL COORDINATE THE WORK BETWEEN PROJECTS. CONFLICTS BETWEEN THE PLANS SHALL BE BROUGHT TO THE ATTENTION OF THE PROJECT ENGINEER.
2. SEE RINO PARK PLANS FOR INFORMATION ON EXISTING WATERLINE.

COLORADO LICENSED
SANDAL LAPSLEY
28785
PROFESSIONAL ENGINEER
11/26/18

TSIOUVARAS SIMMONS HOLDERNESS
CONSULTING ENGINEERS

Last Modification Date:	Init.:		
Drawing File Name: 1505480D-RD-P&P-01.dgn			
Horizontal Scale: 1:40	Vert. Scale: As Noted		

Sheet Revisions

Date:	Comments	Init.

DEPARTMENT OF PUBLIC WORKS
201 WEST COLFAX AVENUE
DENVER, CO 80202
PHONE: (720) 913-4501
FAX: (720) 913-4544

As Constructed
No Revisions:
Revised:
Void:

FESTIVAL STREET
ROADWAY PLAN AND PROFILE

Designer:	CCL	Structure Numbers	
Detailer:	CCL		
Sheet Subset:	ROADPLAN	Subset Sheets:	1 of 2

Project No./Code
-
-

Sheet Number 12

FINAL SUBMITTAL - NOVEMBER 26, 2018

LimC
10/15/2018
2:40:53 PM
P:\1505480D - CCD 33rd Festival 35th\FESTIVAL STREET PROJECT\ROWY\

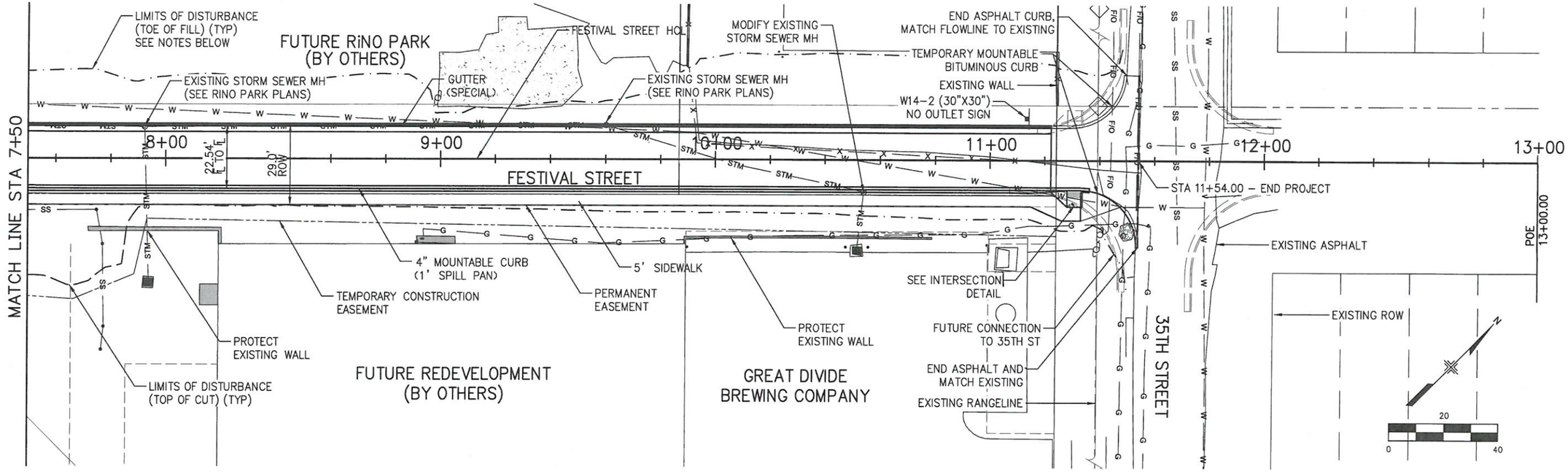

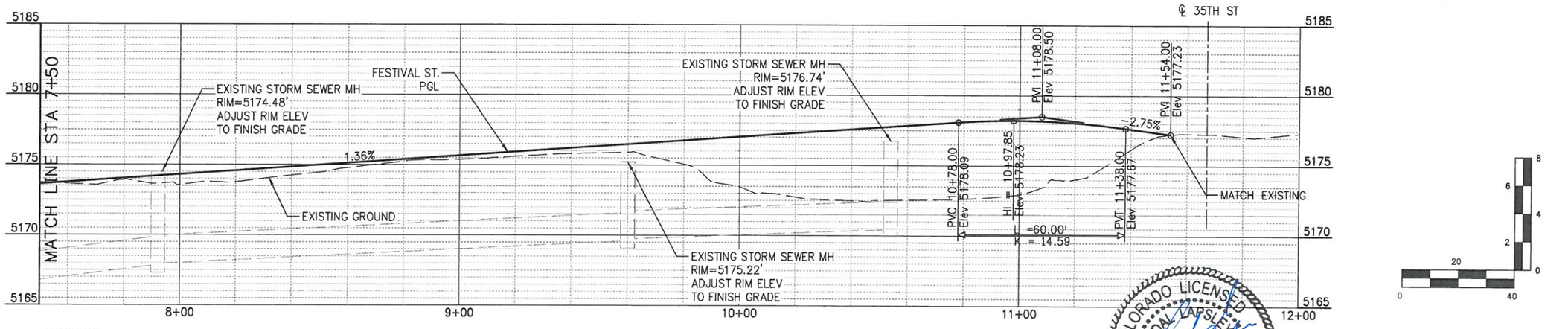

NOTES:

1. THE FESTIVAL STREET IS BEING CONSTRUCTED IN CONJUNCTION WITH THE RIVER NORTH PARK PROJECT. REFER TO THE RIVER NORTH PARK PLANS DATED APRIL, 2018. SOME ITEMS REQUIRED TO CONSTRUCT FESTIVAL STREET MAY BE SHOWN ON THE RIVER NORTH PARK PLANS. THE CONTRACTOR SHALL COORDINATE THE WORK BETWEEN PROJECTS. CONFLICTS BETWEEN THE PLANS SHALL BE BROUGHT TO THE ATTENTION OF THE PROJECT ENGINEER.
2. SEE RINO PARK PLANS FOR INFORMATION ON EXISTING AND PROPOSED WATERLINE.

COLORADO LICENSED
RANDAL LAPSLEY
28785
11/26/18
PROFESSIONAL ENGINEER

TSIOUVARAS SIMMONS HOLDERNESS
CONSULTING ENGINEERS

FINAL SUBMITTAL - NOVEMBER 26, 2018

Last Modification Date:	Init.:
Drawing File Name: 1505480D-RD-P&P-02.dgn	
Horizontal Scale: 1:40	Vert. Scale: As Noted

Sheet Revisions

Date:	Comments	Init.

DEPARTMENT OF PUBLIC WORKS
201 WEST COLFAX AVENUE
DENVER, CO 80202
PHONE: (720) 913-4501
FAX: (720) 913-4544

As Constructed
No Revisions:
Revised:
Void:

FESTIVAL STREET
ROADWAY PLAN AND PROFILE

Designer:	CCL	Structure Numbers	
Detailer:	CCL		
Sheet Subset:	ROADPLAN	Subset Sheets:	2 of 2

Project No./Code
–
–
Sheet Number 13

LimC
10/4/2018
2:32:17 PM
P:\1505480D – CCD 33rd Festival 35th\FESTIVAL STREET PROJECT\RDWY\

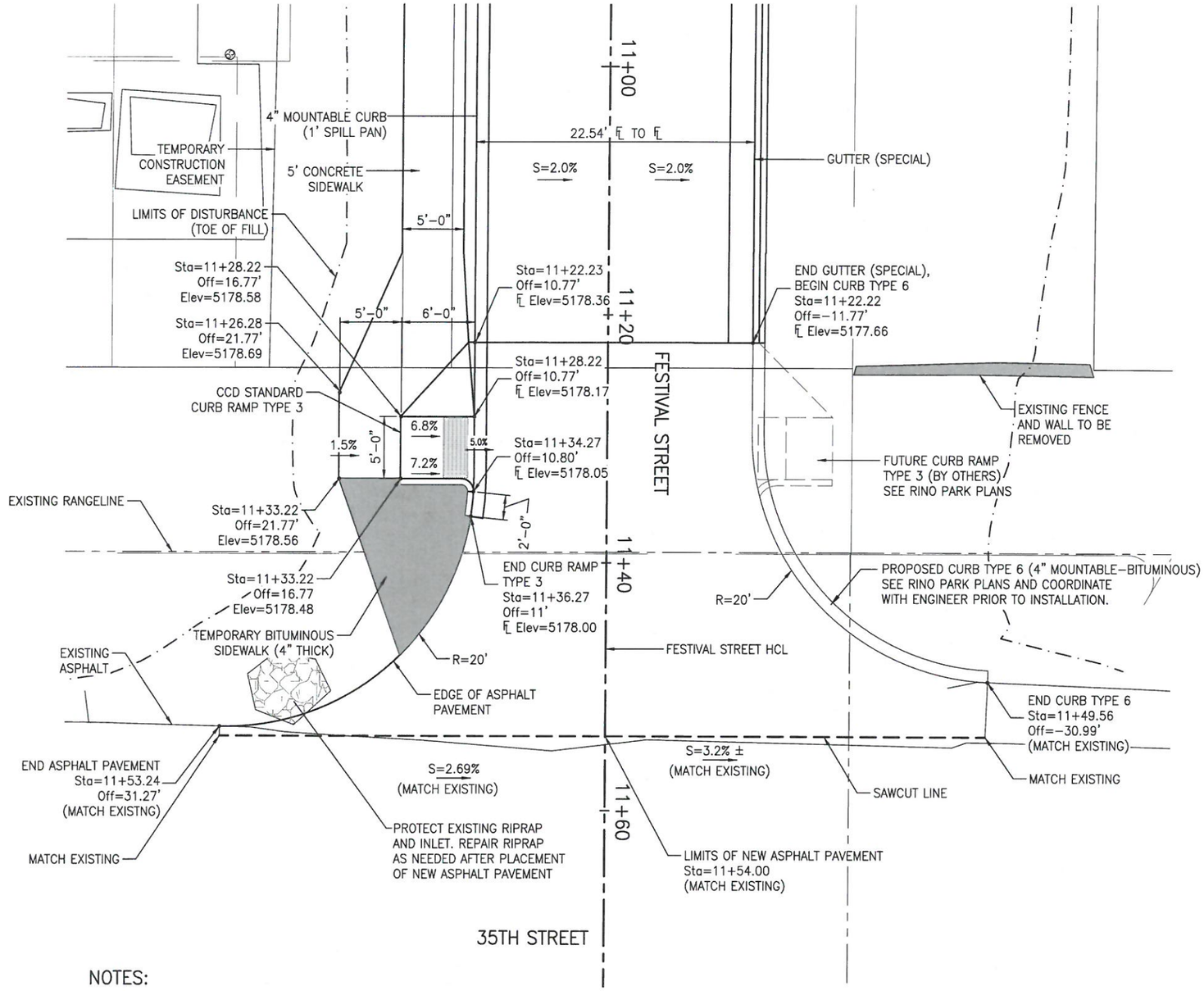

NOTES:

1. THE FESTIVAL STREET IS BEING CONSTRUCTED IN CONJUNCTION WITH THE RIVER NORTH PARK PROJECT. REFER TO THE RIVER NORTH PARK PLANS DATED APRIL, 2018. SOME ITEMS REQUIRED TO CONSTRUCT FESTIVAL STREET MAY BE SHOWN ON THE RIVER NORTH PARK PLANS. THE CONTRACTOR SHALL COORDINATE THE WORK BETWEEN PROJECTS. CONFLICTS BETWEEN THE PLANS SHALL BE BROUGHT TO THE ATTENTION OF THE PROJECT ENGINEER.

2. SEE RINO PARK PLANS FOR INFORMATION ON EXISTING AND PROPOSED WATERLINE.

COLORADO LICENSED PROFESSIONAL ENGINEER RANDAL LAPSLEY 28785 11/26/18

N

5 0 10

TSIOUVARAS SIMMONS HOLDERNESS
CONSULTING ENGINEERS

FINAL SUBMITTAL - NOVEMBER 26, 2018

Last Modification Date: Init.:	Sheet Revisions	DEPARTMENT OF PUBLIC WORKS	As Constructed	FESTIVAL STREET FESTIVAL STREET AND 35TH STREET INTERSECTION DETAIL	Project No./Code
Drawing File Name: 1505480D-RD-DETAILS-01.dgn	Date: Comments Init.	201 WEST COLFAX AVENUE DENVER, CO 80202 PHONE: (720) 913-4501 FAX: (720) 913-4544	No Revisions:		-
Horizontal Scale: 1:10 Vert. Scale: As Noted			Revised:	Designer: CCL Structure Numbers	-
			Void:	Detailer: CCL	
				Sheet Subset: DETAIL Subset Sheets: 1 of 2	Sheet Number 14

LimC 10/4/2018 10:01:26 AM P:\1505480D - CCD 33rd Festival 35th\FESTIVAL STREET PROJECT\RDWY\

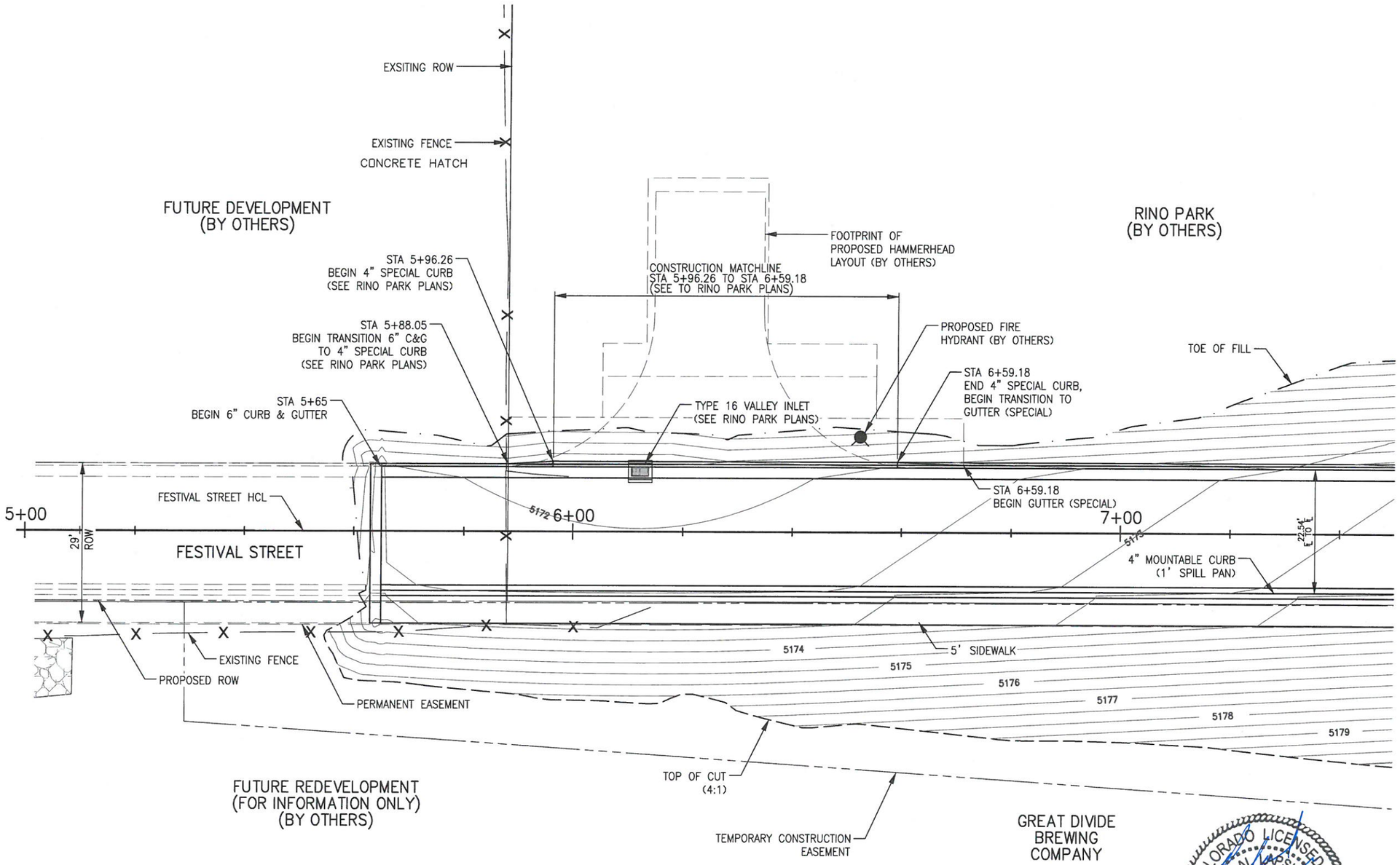

NOTES:

1. THE FESTIVAL STREET IS BEING CONSTRUCTED IN CONJUNCTION WITH THE RIVER NORTH PARK PROJECT. REFER TO THE RIVER NORTH PARK PLANS DATED APRIL, 2018. SOME ITEMS REQUIRED TO CONSTRUCT FESTIVAL STREET MAY BE SHOWN ON THE RIVER NORTH PARK PLANS. THE CONTRACTOR SHALL COORDINATE THE WORK BETWEEN PROJECTS. CONFLICTS BETWEEN THE PLANS SHALL BE BROUGHT TO THE ATTENTION OF THE PROJECT ENGINEER.
2. SEE RINO PARK PLANS FOR INFORMATION ON EXISTING AND PROPOSED WATERLINE.

COLORADO LICENSED
RANDAL LIM
28785
11/26/18
PROFESSIONAL ENGINEER

TSIOUVARAS SIMMONS HOLDERNESS
CONSULTING ENGINEERS

FINAL SUBMITTAL - NOVEMBER 26. 2018

Last Modification Date:	Init.:	
Drawing File Name: 15054800-RD-DETAILS-02.dgn		
Horizontal Scale: 1:20	Vert. Scale: As Noted	

Sheet Revisions

Date:	Comments	Init.

DEPARTMENT OF PUBLIC WORKS
201 WEST COLFAX AVENUE
DENVER, CO 80202
PHONE: (720) 913-4501
FAX: (720) 913-4544

As Constructed
No Revisions:
Revised:
Void:

FESTIVAL STREET
HAMMERHEAD DETAIL

Designer:	C. LIM	Structure Numbers	
Detailer:	C. LIM		
Sheet Subset:	DETAIL	Subset Sheets:	2 of 2

Project No./Code
-
-
Sheet Number 15

LimC
9/5/2018
1:56:19 PM
P:\15054800 - CCD 33rd Festival 35th\FESTIVAL STREET PROJECT\RDWY\

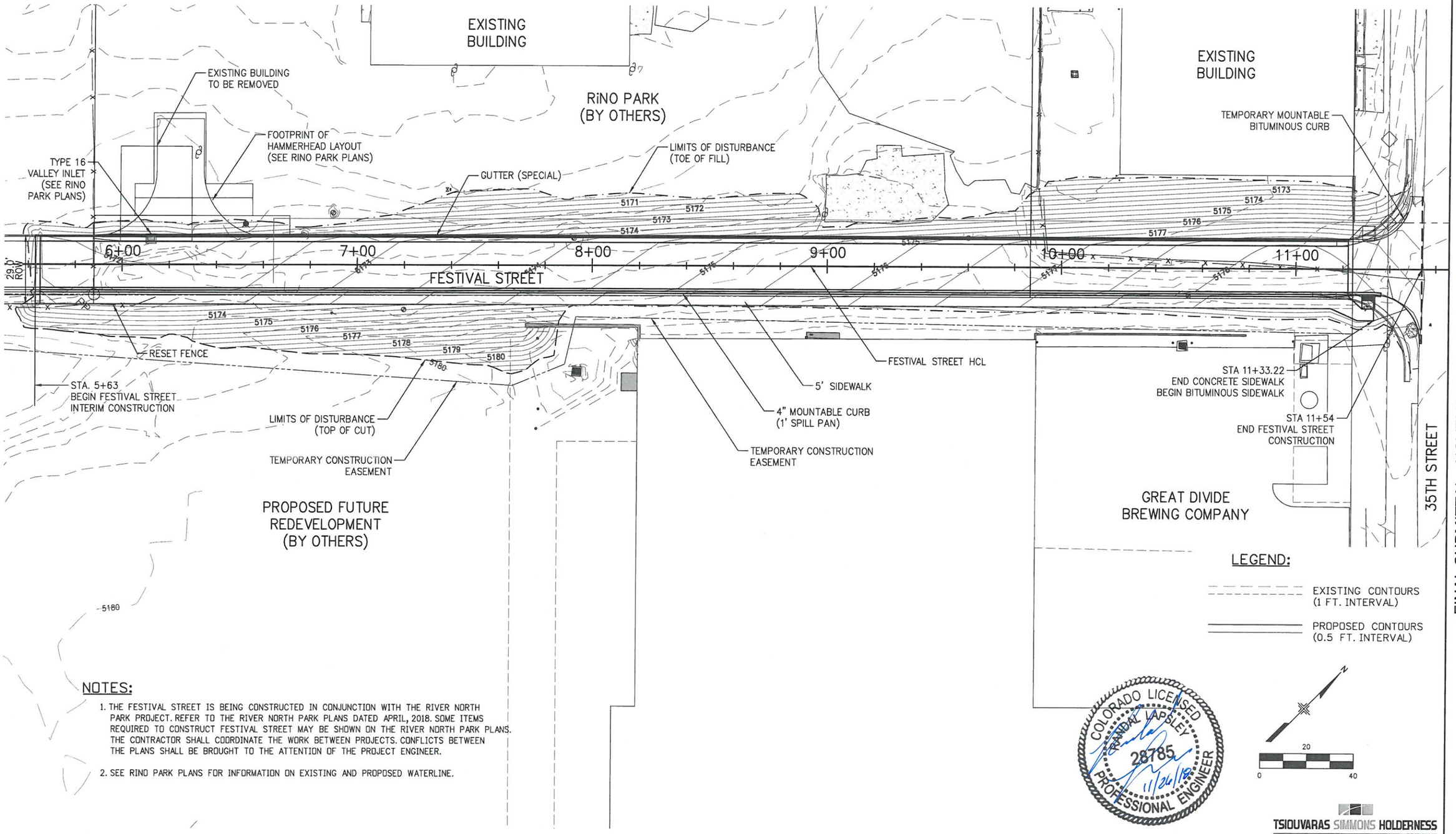

NOTES:

1. THE FESTIVAL STREET IS BEING CONSTRUCTED IN CONJUNCTION WITH THE RIVER NORTH PARK PROJECT. REFER TO THE RIVER NORTH PARK PLANS DATED APRIL, 2018. SOME ITEMS REQUIRED TO CONSTRUCT FESTIVAL STREET MAY BE SHOWN ON THE RIVER NORTH PARK PLANS. THE CONTRACTOR SHALL COORDINATE THE WORK BETWEEN PROJECTS. CONFLICTS BETWEEN THE PLANS SHALL BE BROUGHT TO THE ATTENTION OF THE PROJECT ENGINEER.
2. SEE RINO PARK PLANS FOR INFORMATION ON EXISTING AND PROPOSED WATERLINE.

COLORADO LICENSED RANDAL LAPSLEY 28785 11/26/18 PROFESSIONAL ENGINEER

TSIOUVARAS SIMMONS HOLDERNESS
CONSULTING ENGINEERS

FINAL SUBMITTAL - NOVEMBER 26, 2018

Last Modification Date: 08/20/2015	Init.: CCL
Drawing File Name: 1505480D-RD-GRADING-01.dgn	
Horizontal Scale: 1:40	Vert. Scale: As Noted

Sheet Revisions

Date:	Comments	Init.

DEPARTMENT OF PUBLIC WORKS
201 WEST COLFAX AVENUE
DENVER, CO 80202
PHONE: (720) 913-4501
FAX: (720) 913-4544

As Constructed
No Revisions:
Revised:
Void:

FESTIVAL STREET
ROADWAY GRADING PLAN

Designer:	CCL	Structure Numbers	
Detailer:	CCL		
Sheet Subset:	GRADING	Subset Sheets:	2 of 2

Project No./Code
-
-
Sheet Number 16

LimC
10/4/2018
10:15:11 AM
P:\1505480D - CCD 33rd Festival 35th\FESTIVAL STREET PROJECT\RDWY\

GENERAL UTILITY LEGEND

W W W W	EXISTING WATER
¿M ¿M ¿M ¿M	EXISTING WATER (UNSURVEYED)
G G G G	EXISTING GAS
G? G? G? G?	EXISTING GAS (UNSURVEYED)
E E E E	EXISTING UG ELECTRIC
E OH E OH	EXISTING OH ELECTRIC
E? E? E? E?	EXISTING ELECTRIC (UNSURVEYED)
T T T T	EXISTING UG TELEPHONE
T OH T OH	EXISTING OH TELEPHONE
T? T? T? T?	EXISTING TELEPHONE (UNSURVEYED)
FO FO FO FO	EXISTING FIBER OPTIC
TV TV TV TV	EXISTING UG TV
TV OH TV OH	EXISTING OH TV
TV? TV? TV? TV?	EXISTING TV (UNSURVEYED)
	EXSITING SANITARY SEWER
? ? ? ? ?	EXISTING SANITARY SEWER (UNSURVEYED)
	EXISTING STORM SEWER
? ? ? ? ?	EXISTING STORM SEWER (UNSURVEYED)
	EXISTING PIPE (WITH END SECTION)
	EXISTING PIPE (MISCELLANEOUS)

EXISTING ROOF DRAIN	EXISTING STREET LIGHT
EXISTING STORM MANHOLE	EXISTING ELEC PEDESTAL OR PULL BOX
EXISTING STORM INLET	EXISTING ELECTRICAL MISCELLANEOUS
EXISTING SANITARY MANHOLE	EXISTING ELECTRICAL CONNECTION
EXISTING WATER VALVE	EXISTING ELECTRICAL METER
EXISTING WATER MANHOLE	EXISTING POWER POLE
EXISTING WATER METER	EXISTING GUY POST
EXISTING FIRE HYDRANT	EXISTING GUY WIRE
EXISTING GAS VALVE	EXISTING VAULT OR TRANSFORMER
EXISTING GAS METER	EXISTING TELEPHONE MANHOLE
EXISTING GAS MISCELLANEOUS	EXISTING TELEPHONE PEDESTAL
EXISTING GAS MANHOLE	EXISTING TV MISCELLANEOUS
EXISTING TRAFFIC CONTROL BOX	EXISTING FIBER OPTIC
EXISTING TRAFFIC CONTROL CABINET	EXISTING POTHOLE
EXISTING FUEL MARK	

UTILITY CONTACT LIST

UTILITY COMPANY	TYPE	CONTACT NAME	CONTACT EMAIL	PHONE
AT&T	Fiber	Tom Jakse	tjakse@clearwaterconsulting.net	720-289-5471
CenturyLink	Fiber/ Telephone	Lisa Hauswirth	lisa.hauswirth@centurylink.com	303-451-2329
Comcast	Cable/Fiber	Eric Carroll	eric_carroll@cable.comcast.com	720-413-0245
Denver Traffic	Fiber	Sam Gonzales	sam.gonzales@denvergov.org	720-865-4008
Denver Wastewater Management Division	Sanitary Sewer	Brian Schat		720-865-3045
Denver Water Department	Water	Don Wyman	don.wyman@denverwater.org	303-628-6628
Level 3 Communications	Fiber	Tom Mieczkowski	thomas.mieczkowski@Level3.com	720-888-2013
MCI-Verizon	Fiber	David McAllister	david.mcallister@verizon.com	801-301-0937
TW Telecom	Fiber	Guido Aguillard	Guido.Aguillard@twtelecom.com	303-566-6045
Xcel Energy	Electric/Gas Distribution	Louise Perkins	Louise.perkins@xcelenergy.com	303-571-3113
XO Communications	Fiber	Steve Valdez	steve.g.valdez@xo.com	303-559-1022
Zayo Group	Fiber	Alex Abeyta	alex.abeyta@zayo.com	720-361-1790

FINAL SUBMITTAL - NOVEMBER 26. 2018

COLORADO LICENSED RANDAL LAFFERTY 28785 PROFESSIONAL ENGINEER 11/20/18

Know what's below. Call before you dig.

TSIOUVARAS SIMMONS HOLDERNESS CONSULTING ENGINEERS

Charlie.Lim
8/10/2018
10:08:57 AM
P:\1505480D - CCD 33rd Festival 35th\FESTIVAL STREET PROJECT\ROW\

Last Modification Date:	Init.:	
Drawing File Name: 1505480D-UTIL-01.dgn		
Horizontal Scale: 1:50	Vert. Scale: As Noted	

Sheet Revisions

Date:	Comments	Init.

DEPARTMENT OF PUBLIC WORKS
201 WEST COLFAX AVENUE
DENVER, CO 80202
PHONE: (720) 913-4501
FAX: (720) 913-4544

As Constructed
No Revisions:
Revised:
Void:

FESTIVAL STREET
GENERAL UTILITY LEGEND AND CONTACT LIST

Designer:	CCL	Structure Numbers	
Detailer:	CCL		
Sheet Subset:	UTIL	Subset Sheets:	1 of 1

Project No./Code
-
-
Sheet Number 17

EXISTING BUILDING

PROPOSED CARDONA TOWNHOMES (FOR INFORMATION ONLY) (BY OTHERS)

EXISTING BUILDING

GUTTER (SPECIAL)

RINO PARK (BY OTHERS)

LIMITS OF DISTURBANCE (TOE OF FILL)

EXISTING BUILDING

6+00 | 7+00 | FESTIVAL STREET | 8+00 | 9+00 | 10+00 | 11+00

29.0' ROW

5170 5175 5180

LIMITS OF DISTURBANCE (TOP OF CUT)

EXISTING WALL

WATERLINE SEE RINO PARK PLANS

PERMANENT CONSTRUCTION EASEMENT

FESTIVAL STREET HCL

PERMANENT EASEMENT

GREAT DIVIDE BREWING COMPANY

35TH STREET

PROPOSED FUTURE REDEVELOPMENT (BY OTHERS)

LEGEND:

EXISTING CONTOURS (1 FT. INTERVAL)

NOTES:

1. THE FESTIVAL STREET IS BEING CONSTRUCTED IN CONJUNCTION WITH THE RIVER NORTH PARK PROJECT. REFER TO THE RIVER NORTH PARK PLANS DATED APRIL, 2018. SOME ITEMS REQUIRED TO CONSTRUCT FESTIVAL STREET MAY BE SHOWN ON THE RIVER NORTH PARK PLANS. THE CONTRACTOR SHALL COORDINATE THE WORK BETWEEN PROJECTS. CONFLICTS BETWEEN THE PLANS SHALL BE BROUGHT TO THE ATTENTION OF THE PROJECT ENGINEER.
2. SEE RINO PARK PLANS FOR INFORMATION ON EXISTING AND PROPOSED WATERLINE.
3. EXISTING UTILITY INFORMATION WAS COLLECTED IN JULY, 2015 AND REFLECTS INFORMATION KNOWN AT THAT TIME. NO UPDATES HAVE BEEN MADE TO THE EXISTING UTILITY INFORMATION TO CONFORM WITH THE SUBSURFACE UTILITY LAW SB-18-167.

My responsibility with respect to this sheet is limited to showing existing utility information available in July 2015 from survey.

COLORADO LICENSED RANDALL CAPSLEY 28785 11/26/18 PROFESSIONAL ENGINEER

20 0 40

TSIOUVARAS SIMMONS HOLDERNESS CONSULTING ENGINEERS

FINAL SUBMITTAL - NOVEMBER 26, 2018

Last Modification Date:	Init.:		
Drawing File Name: 1505480D-UTIL-02.dgn			
Horizontal Scale: 1:40	Vert. Scale: As Noted		

Sheet Revisions

Date:	Comments	Init.

DEPARTMENT OF PUBLIC WORKS
201 WEST COLFAX AVENUE
DENVER, CO 80202
PHONE: (720) 913-4501
FAX: (720) 913-4544

As Constructed

No Revisions:	
Revised:	
Void:	

FESTIVAL STREET UTILITY PLAN

Designer:	CCL	Structure Numbers	
Detailer:	CCL		
Sheet Subset:	UTIL	Subset Sheets:	1 of 1

Project No./Code: –

–

Sheet Number: 18

LimC
11/26/2018
9:49:10 AM
P:\1505480D - CCD 33rd Festival 35th\FESTIVAL STREET PROJECT\ROW\

STANDARD NOTES FOR WATER QUALITY/NPDES EROSION & SEDIMENT CONTROL

1. THIS STORMWATER MANAGEMENT PLAN IS INTENDED TO SHOW THE BMP'S NECESSARY TO OBTAIN A PERMIT FOR THE CONSTRUCTION OF THIS PROJECT. A PERMIT HAS NOT BEEN APPLIED FOR. IT IS THE CONTRACTOR'S RESPONSABLITY TO APPLY FOR AND OBTAIN NECESSARY PERMITS.

2. THE OWNER, SITE DEVELOPER, CONTRACTOR AND/OR THEIR AUTHORIZED AGENTS SHALL REMOVE ALL SEDIMENT, MUD, CONSTRUCTION DEBRIS, OR OTHER POTENTIAL POLLUTANTS THAT MAY HAVE BEEN DISCHARGED TO OR, ACCUMULATE IN, THE FLOWLINES AND PUBLIC RIGHTS OF WAYS OF THE CITY AND COUNTY OF DENVER AS A RESULT OF CONSTRUCTION ACTIVITIES ASSOCIATED WITH THIS SITE DEVELOPMENT OR CONSTRUCTION PROJECT. SAID REMOVAL SHALL BE CONDUCTED IN A TIMELY MANNER.

3. THE CONTRACTOR SHALL PREVENT SEDIMENT, DEBRIS AND ALL OTHER POLLUTANTS FROM ENTERING THE STORM SEWER SYSTEM DURING ALL DEMOLITION, EXCAVATION, TRENCHING, BORING, GRADING OR OTHER CONSTRUCTION OPERATIONS THAT ARE PART OF THIS PROJECT. THE CONTRACTOR SHALL BE HELD RESPONSIBLE FOR REMEDIATION OF ANY ADVERSE IMPACTS TO ADJACENT WATERWAYS, WETLANDS, ETC., RESULTING FROM WORK DONE AS PART OF THIS PROJECT.

4. A LAYER OF SUITABLE MULCH SHALL BE APPLIED TO ALL DISTURBED PORTIONS OF THE SITE WITHIN 14 DAYS OF THE COMPLETION OF OVERLOT GRADING. SAID MULCH SHALL BE APPLIED AT A RATE OF 2 TONS PER ACRE AND SHALL BE TACKED OR FASTENED BY AN APPROVED METHOD SUITABLE FOR THE TYPE OF MULCH USED. ROUGH-CUT STREETS SHALL BE MULCHED UNLESS A LAYER OF AGGREGATE ROAD BASE OR ASPHALT PAVING IS TO BE APPLIED TO SAID ROUGH-CUT STREETS WITHIN THE 14-DAY PERIOD AFTER COMPLETION OF OVERLOT GRADING.

5. THE CONTRACTOR SHALL LOCATE, INSTALL, AND MAINTAIN ALL EROSION CONTROL AND WATER QUALITY "BEST MANAGEMENT PRACTICES" AS INDICATED IN THE APPROVED CONSTRUCTION ACTIVITIES STORMWATER MANAGEMENT PLAN (CHAPTER 10, CITY AND COUNTY OF DENVER, DEPARTMENT OF PUBLIC WORKS, RULES AND REGULATIONS GOVERNING SEWERAGE CHARGES AND FEES AND MANAGEMENT OF WASTEWATER).

6. THE DEVELOPER, GENERAL CONTRACTOR, GRADING CONTRACTOR AND/OR THEIR AUTHORIZED AGENTS SHALL INSURE THAT ALL LOADS OF CUT AND FILL MATERIAL IMPORTED TO OR EXPORTED FROM THIS SITE SHALL BE PROPERLY COVERED TO PREVENT LOSS OF THE MATERIAL DURING TRANSPORT ON PUBLIC RIGHTS OF WAYS (SEC. 49-552; REVISED MUNICIPAL CODE).

7. THE USE OF REBAR, STEEL STAKES, OR STEEL FENCE POSTS TO STAKE DOWN STRAW OR HAY BALES; OR TO SUPPORT SILT FENCING USED AS AN EROSION CONTROL MEASURE; IS PROHIBITED. THE USE OF OSHA APPROVED COLORED WARNING CAPS ON REBAR OR FENCE POSTS USED WITH EROSION CONTROL MEASURES IS NOT ACCEPTABLE.

8. SOILS THAT WILL BE STOCKPILED FOR MORE THAN 30 DAYS SHALL BE PROTECTED FROM WIND AND WATER EROSION WITHIN 14 DAYS OF STOCKPILE CONSTRUCTION. STABILIZATION AND PROTECTION OF THE STOCKPILE MAY BE ACCOMPLISHED BY ANY OF THE FOLLOWING: MULCHING, TEMPORARY/PERMANENT REVEGETATION OPERATIONS, CHEMICAL SOIL STABILIZER APPLICATION (REQUIRES PW WMD APPROVAL), OR EROSION CONTROL MATTING/GEOTEXTILES. IF STOCKPILES ARE LOCATED WITHIN 100 FEET OF A DRAINAGEWAY, ADDITIONAL SEDIMENT CONTROLS SUCH AS TEMPORARY DIKES OR SILT FENCE SHALL BE REQUIRED.

9. APPROVED EROSION AND SEDIMENT CONTROL "BEST MANAGEMENT PRACTICES" (BMP) SHALL BE MAINTAINED AND KEPT IN GOOD REPAIR FOR THE DURATION OF THIS PROJECT. AT A MINIMUM, THE CONTRACTOR OR HIS AGENT SHALL INSPECT ALL BMPS WEEKLY AND AFTER SIGNIFICANT PRECIPITATION EVENTS. ALL NECESSARY MAINTENANCE AND REPAIR SHALL BE COMPLETED IN A TIMELY MANNER. ACCUMULATED SEDIMENT AND DEBRIS SHALL BE REMOVED FROM A BMP WHEN THE SEDIMENT LEVEL REACHES ONE HALF THE HEIGHT OF THE BMP OR, AT ANY TIME THAT SEDIMENT OR DEBRIS ADVERSELY IMPACTS THE FUNCTIONING OF THE BMP.

10. MODIFICATION OF AN ACTIVE CONSTRUCTION ACTIVITIES STORMWATER DISCHARGE PERMIT BY THE DEVELOPER, CONTRACTOR OR THEIR AUTHORIZED AGENTS SHALL REQUIRE TIMELY NOTIFICATION OF AND APPROVAL BY PUBLIC WORKS, WASTEWATER MANAGEMENT DIVISION. TERMINATION OF AN ACTIVE CONSTRUCTION ACTIVITIES STORMWATER DISCHARGE PERMIT UPON COMPLETION OF THE PROJECT REQUIRES NOTIFICATION OF AND APPROVAL BY PUBLIC WORKS, WASTEWATER MANAGEMENT DIVISION.

11. WATER USED IN THE CLEANING OF CEMENT TRUCK DELIVERY CHUTES SHALL BE DISCHARGED INTO A PREDEFINED, BERMED CONTAINMENT AREA ON THE JOB SITE. THE REQUIRED CONTAINMENT AREA IS TO BE BERMED SO THAT WASH WATER IS TOTALLY CONTAINED. WASH WATER DISCHARGED INTO THE CONTAINMENT AREA SHALL BE ALLOWED TO INFILTRATE OR EVAPORATE. DRIED CEMENT WASTE IS REMOVED FROM THE CONTAINMENT AREA AND PROPERLY DISPOSED OF. SHOULD A PREDEFINED BERMED CONTAINMENT AREA NOT BE AVAILABLE DUE TO THE PROJECT SIZE, OR LACK OF AN AREA WITH A SUITABLE GROUND SURFACE FOR ESTABLISHING A CONTAINMENT AREA, PROPER DISPOSAL OF READY MIX WASHOUT AND RINSE OFF WATER AT THE JOB SITE SHALL CONFORM TO THE APPROVED TECHNIQUES AND PRACTICES IDENTIFIED IN THE COLORADO DEPARTMENT OF PUBLIC HEALTH & ENVIRONMENT'S TRAINING VIDEO ENTITLED "BUILDING FOR A CLEANER ENVIRONMENT, READY MIX WASHOUT TRAINING", AND ITS ACCOMPANYING MANUAL ENTITLED, "READY MIX WASHOUT GUIDEBOOK, VEHICLE AND EQUIPMENT WASHOUT AT CONSTRUCTION SITES." THE DIRECT OR INDIRECT DISCHARGE OF WATER CONTAINING WASTE CEMENT TO THE STORM SEWER SYSTEM IS PROHIBITED (SEC. 56-102 (A)(C); REVISED MUNICIPAL CODE, CITY AND COUNTY OF DENVER). INFORMATION ABOUT, OR COPIES OF THE VIDEO AND TRAINING MANUAL ARE AVAILABLE FROM THE WATER QUALITY CONTROL DIVISION, COLORADO DEPARTMENT OF PUBLIC HEALTH & ENVIRONMENT, 4300 CHERRY CREEK DRIVE SOUTH, DENVER, COLORADO 80222-1530, 303-692-3555.

12. THE CONTRACTOR SHALL PROTECT ALL STORM SEWER FACILITIES ADJACENT TO ANY LOCATION WHERE PAVEMENT CUTTING OPERATIONS INVOLVING WHEEL CUTTING, SAW CUTTING OR ABRASIVE WATER JET CUTTING ARE TO TAKE PLACE. THE CONTRACTOR SHALL REMOVE AND PROPERLY DISPOSE OF ALL WASTE PRODUCTS GENERATED BY SAID CUTTING OPERATIONS ON A DAILY BASIS. THE DISCHARGE OF ANY WATER CONTAMINATED BY WASTE PRODUCTS FROM CUTTING OPERATIONS TO THE STORM SEWER SYSTEM IS PROHIBITED.

13. PAVED SURFACES WHICH ARE ADJACENT TO CONSTRUCTION SITES BE SWEPT IN A TIMELY MANNER WHEN SEDIMENT AND OTHER MATERIALS ARE TRACKED OR DISCHARGED ON TO THEM. EITHER SWEEPING BY HAND OR USE OF STREET SWEEPERS IS ACCEPTABLE. STREET SWEEPERS USING WATER WHILE SWEEPING IS PREFERRED IN ORDER TO MINIMIZE DUST. FLUSHING OFF PAVED SURFACES WITH WATER IS PROHIBITED (SEC. 56-102 (A)(C); REVISED MUNICIPAL CODE, CITY AND COUNTY OF DENVER).

FINAL SUBMITTAL - NOVEMBER 26, 2018

COLORADO LICENSED
BRIAN SLOAN
40820
11/27/18
PROFESSIONAL ENGINEER

TSIOUVARAS SIMMONS HOLDERNESS
CONSULTING ENGINEERS

Last Modification Date:	Init.:		
Drawing File Name: 15054800-DR-SWMP-01.dgn			
Horizontal Scale: 1:2	Vert. Scale: As Noted		

Sheet Revisions

Date:	Comments	Init.

DEPARTMENT OF PUBLIC WORKS
201 WEST COLFAX AVENUE
DENVER, CO 80202
PHONE: (720) 913-4501
FAX: (720) 913-4544

As Constructed
No Revisions:
Revised:
Void:

FESTIVAL STREET
STORMWATER MANAGEMENT PLAN
GENERAL NOTES

Designer:	JAS	Structure Numbers	
Detailer:	LAN		
Sheet Subset:	EROS	Subset Sheets:	1 of 4

Project No./Code
-
-
Sheet Number 19

larry.nichols
8/10/2018
1:31:37 PM
P:\15054800 - CCD 33rd Festival 35th\FESTIVAL STREET PROJECT\DRNG\

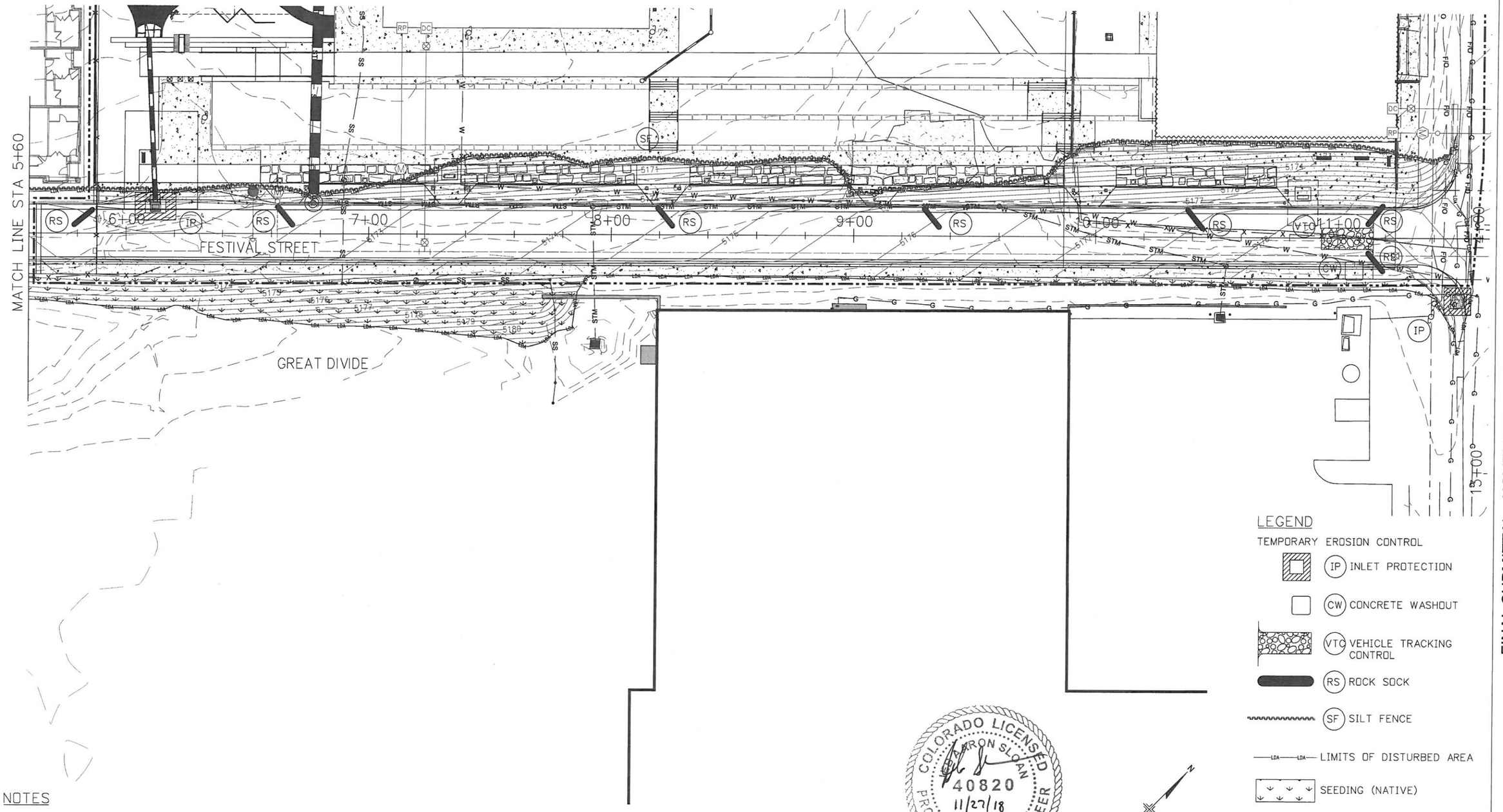

NOTES

1. THE FESTIVAL STREET IS BEING CONSTRUCTED IN CONJUNCTION WITH THE RIVER NORTH PARK PROJECT. REFER TO THE RIVER NORTH PARK PLANS DATED APRIL, 2018. SOME ITEMS REQUIRED TO CONSTRUCT FESTIVAL STREET MAY BE SHOWN ON THE RIVER NORTH PARK PLANS. THE CONTRACTOR SHALL COORDINATE THE WORK BETWEEN PROJECTS. CONFLICTS BETWEEN THE PLANS SHALL BE BROUGHT TO THE ATTENTION OF THE PROJECT ENGINEER.

LEGEND

TEMPORARY EROSION CONTROL

- IP — INLET PROTECTION
- CW — CONCRETE WASHOUT
- VTC — VEHICLE TRACKING CONTROL
- RS — ROCK SOCK
- SF — SILT FENCE
- LDA — LDA — LIMITS OF DISTURBED AREA
- SEEDING (NATIVE)

COLORADO LICENSED
AARON SLOAN
40820
11/27/18
PROFESSIONAL ENGINEER

0 20 40

TSIOUVARAS SIMMONS HOLDERNESS
CONSULTING ENGINEERS

FINAL SUBMITTAL - NOVEMBER 26, 2018

Last Modification Date: 12/11/2015	Init.: JAS
Drawing File Name: 1505480D-DR-SWMP-02.dgn	
Horizontal Scale: 1:40	Vert. Scale: As Noted

Sheet Revisions		
Date:	Comments	Init.

DEPARTMENT OF PUBLIC WORKS
201 WEST COLFAX AVENUE
DENVER, CO 80202
PHONE: (720) 913-4501
FAX: (720) 913-4544

As Constructed

No Revisions:	
Revised:	
Void:	

FESTIVAL STREET
STORMWATER MANAGEMENT PLAN

Designer:	JAS	Structure Numbers	
Detailer:	LAN		
Sheet Subset:	EROS	Subset Sheets:	2 of 4

Project No./Code: _ / _

Sheet Number: 20

LimC
8/14/2018
9:58:55 AM
P:\1505480D - CCD 33rd Festival 35th\FESTIVAL STREET PROJECT\DRNG\

Concrete Washout Area (CWA) MM-1

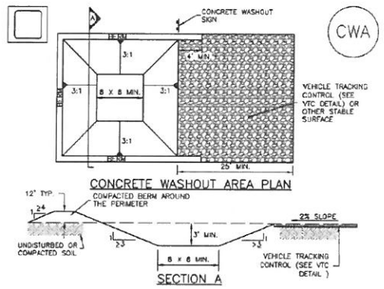

CWA-1. CONCRETE WASHOUT AREA

CWA INSTALLATION NOTES

1. SEE PLAN VIEW FOR:
   -CWA INSTALLATION LOCATION.

2. DO NOT LOCATE AN UNLINED CWA WITHIN 400' OF ANY NATURAL DRAINAGE PATHWAY OR WATERBODY, DO NOT LOCATE WITHIN 1,000' OF ANY WELLS OR DRINKING WATER SOURCES. IF SITE CONSTRAINTS MAKE THIS INFEASIBLE, OR IF HIGHLY PERMEABLE SOILS EXIST ON SITE, THE CWA MUST BE INSTALLED WITH AN IMPERMEABLE LINER (16 MIL MIN. THICKNESS) OR SURFACE STORAGE ALTERNATIVES USING PREFABRICATED CONCRETE WASHOUT DEVICES OR A LINED ABOVE GROUND STORAGE AREA SHOULD BE USED.

3. THE CWA SHALL BE INSTALLED PRIOR TO CONCRETE PLACEMENT ON SITE.

4. CWA SHALL INCLUDE A FLAT SUBSURFACE PIT THAT IS AT LEAST 8' BY 8' SLOPES LEADING OUT OF THE SUBSURFACE PIT SHALL BE 3:1 OR FLATTER. THE PIT SHALL BE AT LEAST 3' DEEP.

5. BERM SURROUNDING SIDES AND BACK OF THE CWA SHALL HAVE MINIMUM HEIGHT OF 1'.

6. VEHICLE TRACKING PAD SHALL BE SLOPED 2% TOWARDS THE CWA.

7. SIGNS SHALL BE PLACED AT THE CONSTRUCTION ENTRANCE, AT THE CWA, AND ELSEWHERE AS NECESSARY TO CLEARLY INDICATE THE LOCATION OF THE CWA TO OPERATORS OF CONCRETE TRUCKS AND PUMP RIGS.

8. USE EXCAVATED MATERIAL FOR PERIMETER BERM CONSTRUCTION

Rock Sock (RS) SC-5

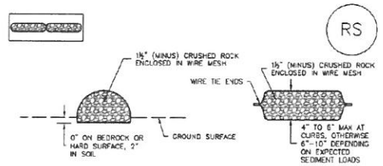

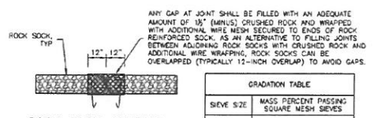

GRADATION TABLE	
SIEVE SIZE	MASS PERCENT PASSING SQUARE MESH SIEVES
	NO. 4
2"	100
1½"	90 - 100
1"	20 - 55
⅜"	0 - 15
#8	0 - 5
MATCHES SPECIFICATIONS FOR NO. 4 COARSE AGGREGATE FOR CONCRETE PER AASHTO M43. ALL ROCK SHALL BE FRACTURED FACE ALL SIDES.	

ROCK SOCK INSTALLATION NOTES

1. SEE PLAN VIEW FOR:
   -LOCATION(S) OF ROCK SOCKS

2. CRUSHED ROCK SHALL BE 1½" (MINUS) IN SIZE WITH A FRACTURED FACE (ALL SIDES) AND SHALL COMPLY WITH GRADATION SHOWN ON THIS SHEET (1½" MINUS).

3. WIRE MESH SHALL BE FABRICATED OF 10 GAGE POULTRY MESH, OR EQUIVALENT, WITH A MAXIMUM OPENING OF ½". RECOMMENDED MINIMUM ROLL WIDTH OF 48"

4. WIRE MESH SHALL BE SECURED USING "HOG RINGS" OR WIRE TIES AT 6" CENTERS ALONG ALL JOINTS AND AT 2" CENTERS ON ENDS OF SOCKS.

5. SOME MUNICIPALITIES MAY ALLOW THE USE OF FILTER FABRIC AS AN ALTERNATIVE TO WIRE MESH FOR THE ROCK ENCLOSURE.

RS-1. ROCK SOCK PERIMETER CONTROL

Vehicle Tracking Control (VTC) SM-4

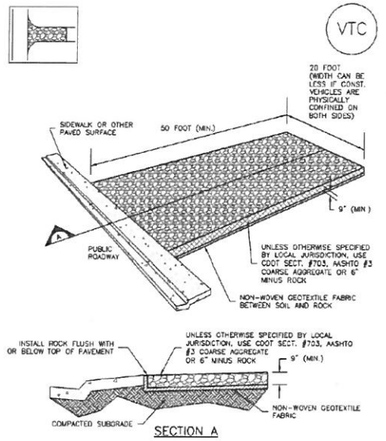

VTC-1. AGGREGATE VEHICLE TRACKING CONTROL

Silt Fence (SF) SC-1

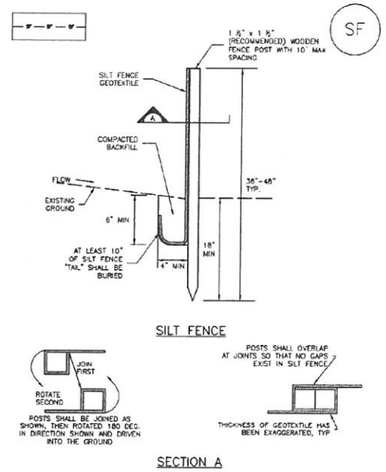

SF-1. SILT FENCE

MM-1 Concrete Washout Area (CWA)

CWA MAINTENANCE NOTES

1. INSPECT BMPs EACH WORKDAY, AND MAINTAIN THEM IN EFFECTIVE OPERATING CONDITION. MAINTENANCE OF BMPs SHOULD BE PROACTIVE, NOT REACTIVE. INSPECT BMPs AS SOON AS POSSIBLE (AND ALWAYS WITHIN 24 HOURS) FOLLOWING A STORM THAT CAUSES SURFACE EROSION, AND PERFORM NECESSARY MAINTENANCE.

2. FREQUENT OBSERVATIONS AND MAINTENANCE ARE NECESSARY TO MAINTAIN BMPs IN EFFECTIVE OPERATING CONDITION. INSPECTIONS AND CORRECTIVE MEASURES SHOULD BE DOCUMENTED THOROUGHLY.

3. WHERE BMPs HAVE FAILED, REPAIR OR REPLACEMENT SHOULD BE INITIATED UPON DISCOVERY OF THE FAILURE.

4. THE CWA SHALL BE REPAIRED, CLEANED, OR ENLARGED AS NECESSARY TO MAINTAIN CAPACITY FOR CONCRETE WASTE. CONCRETE MATERIALS, ACCUMULATED IN PIT, SHALL BE REMOVED ONCE THE MATERIALS HAVE REACHED A DEPTH OF 3'.

5. CONCRETE WASHOUT WATER, WASTED PIECES OF CONCRETE AND ALL OTHER DEBRIS IN THE SUBSURFACE PIT SHALL BE TRANSPORTED FROM THE JOB SITE IN A WATER-TIGHT CONTAINER AND DISPOSED OF PROPERLY.

6. THE CWA SHALL REMAIN IN PLACE UNTIL ALL CONCRETE FOR THE PROJECT IS PLACED.

7. WHEN THE CWA IS REMOVED, COVER THE DISTURBED AREA WITH TOP SOIL, SEED AND MULCH OR OTHERWISE STABILIZED IN A MANNER APPROVED BY THE LOCAL JURISDICTION.

(DETAIL ADAPTED FROM DOUGLAS COUNTY, COLORADO AND THE CITY OF PARKER, COLORADO, NOT AVAILABLE IN AUTOCAD)

NOTE: MANY JURISDICTIONS HAVE BMP DETAILS THAT VARY FROM UDFCD STANDARD DETAILS. CONSULT WITH LOCAL JURISDICTIONS AS TO WHICH DETAIL SHOULD BE USED WHEN DIFFERENCES ARE NOTED.

Rock Sock (RS) SC-5

ROCK SOCK MAINTENANCE NOTES

1. INSPECT BMPs EACH WORKDAY, AND MAINTAIN THEM IN EFFECTIVE OPERATING CONDITION. MAINTENANCE OF BMPs SHOULD BE PROACTIVE, NOT REACTIVE. INSPECT BMPs AS SOON AS POSSIBLE (AND ALWAYS WITHIN 24 HOURS) FOLLOWING A STORM THAT CAUSES SURFACE EROSION, AND PERFORM NECESSARY MAINTENANCE.

2. FREQUENT OBSERVATIONS AND MAINTENANCE ARE NECESSARY TO MAINTAIN BMPs IN EFFECTIVE OPERATING CONDITION. INSPECTIONS AND CORRECTIVE MEASURES SHOULD BE DOCUMENTED THOROUGHLY.

3. WHERE BMPs HAVE FAILED, REPAIR OR REPLACEMENT SHOULD BE INITIATED UPON DISCOVERY OF THE FAILURE.

4. ROCK SOCKS SHALL BE REPLACED IF THEY BECOME HEAVILY SOILED, OR DAMAGED BEYOND REPAIR.

5. SEDIMENT ACCUMULATED UPSTREAM OF ROCK SOCKS SHALL BE REMOVED AS NEEDED TO MAINTAIN FUNCTIONALITY OF THE BMP, TYPICALLY WHEN DEPTH OF ACCUMULATED SEDIMENTS IS APPROXIMATELY ½ OF THE HEIGHT OF THE ROCK SOCK.

6. ROCK SOCKS ARE TO REMAIN IN PLACE UNTIL THE UPSTREAM DISTURBED AREA IS STABILIZED AND APPROVED BY THE LOCAL JURISDICTION.

7. WHEN ROCK SOCKS ARE REMOVED, ALL DISTURBED AREAS SHALL BE COVERED WITH TOPSOIL, SEEDED AND MULCHED OR OTHERWISE STABILIZED AS APPROVED BY LOCAL JURISDICTION.

(DETAIL ADAPTED FROM TOWN OF PARKER, COLORADO AND CITY OF AURORA, COLORADO, NOT AVAILABLE IN AUTOCAD)

NOTE: MANY JURISDICTIONS HAVE BMP DETAILS THAT VARY FROM UDFCD STANDARD DETAILS. CONSULT WITH LOCAL JURISDICTIONS AS TO WHICH DETAIL SHOULD BE USED WHEN DIFFERENCES ARE NOTED.

NOTE: THE DETAILS INCLUDED WITH THIS FACT SHEET SHOW COMMONLY USED, CONVENTIONAL METHODS OF ROCK SOCK INSTALLATION IN THE DENVER METROPOLITAN AREA. THERE ARE MANY OTHER SIMILAR PROPRIETARY PRODUCTS ON THE MARKET. UDFCD NEITHER ENDORSES NOR DISCOURAGES USE OF PROPRIETARY PROTECTION PRODUCTS; HOWEVER, IN THE EVENT PROPRIETARY METHODS ARE USED, THE APPROPRIATE DETAIL FROM THE MANUFACTURER MUST BE INCLUDED IN THE SWMP AND THE BMP MUST BE INSTALLED AND MAINTAINED AS SHOWN IN THE MANUFACTURER'S DETAILS.

SM-4 Vehicle Tracking Control (VTC)

STABILIZED CONSTRUCTION ENTRANCE/EXIT INSTALLATION NOTES

1. SEE PLAN VIEW FOR
   -LOCATION OF CONSTRUCTION ENTRANCE(S)/EXIT(S).
   -TYPE OF CONSTRUCTION ENTRANCE(S)/EXITS(S) (WITH/WITHOUT WHEEL WASH, CONSTRUCTION MAT OR TRM).

2. CONSTRUCTION MAT OR TRM STABILIZED CONSTRUCTION ENTRANCES ARE ONLY TO BE USED ON SHORT DURATION PROJECTS (TYPICALLY RANGING FROM A WEEK TO A MONTH) WHERE THERE WILL BE LIMITED VEHICULAR ACCESS

3. A STABILIZED CONSTRUCTION ENTRANCE/EXIT SHALL BE LOCATED AT ALL ACCESS POINTS WHERE VEHICLES ACCESS THE CONSTRUCTION SITE FROM PAVED RIGHT-OF-WAYS.

4. STABILIZED CONSTRUCTION ENTRANCE/EXIT SHALL BE INSTALLED PRIOR TO ANY LAND DISTURBING ACTIVITIES.

5. A NON-WOVEN GEOTEXTILE FABRIC SHALL BE PLACED UNDER THE STABILIZED CONSTRUCTION ENTRANCE/EXIT PRIOR TO THE PLACEMENT OF ROCK.

6. UNLESS OTHERWISE SPECIFIED BY LOCAL JURISDICTION, ROCK SHALL CONSIST OF DOT SECT. #703, AASHTO #3 COARSE AGGREGATE OR 6" (MINUS) ROCK.

STABILIZED CONSTRUCTION ENTRANCE/EXIT MAINTENANCE NOTES

1. INSPECT BMPs EACH WORKDAY, AND MAINTAIN THEM IN EFFECTIVE OPERATING CONDITION. MAINTENANCE OF BMPs SHOULD BE PROACTIVE, NOT REACTIVE. INSPECT BMPs AS SOON AS POSSIBLE (AND ALWAYS WITHIN 24 HOURS) FOLLOWING A STORM THAT CAUSES SURFACE EROSION, AND PERFORM NECESSARY MAINTENANCE.

2. FREQUENT OBSERVATIONS AND MAINTENANCE ARE NECESSARY TO MAINTAIN BMPs IN EFFECTIVE OPERATING CONDITION. INSPECTIONS AND CORRECTIVE MEASURES SHOULD BE DOCUMENTED THOROUGHLY.

3. WHERE BMPs HAVE FAILED, REPAIR OR REPLACEMENT SHOULD BE INITIATED UPON DISCOVERY OF THE FAILURE.

4. ROCK SHALL BE REAPPLIED OR REGRADED AS NECESSARY TO THE STABILIZED ENTRANCE/EXIT TO MAINTAIN A CONSISTENT DEPTH.

5. SEDIMENT TRACKED ONTO PAVED ROADS IS TO BE REMOVED THROUGHOUT THE DAY AND AT THE END OF THE DAY BY SHOVELING OR SWEEPING. SEDIMENT MAY NOT BE WASHED DOWN STORM SEWER DRAINS.

NOTE: MANY JURISDICTIONS HAVE BMP DETAILS THAT VARY FROM UDFCD STANDARD DETAILS. CONSULT WITH LOCAL JURISDICTIONS AS TO WHICH DETAIL SHOULD BE USED WHEN DIFFERENCES ARE NOTED.

(DETAILS ADAPTED FROM CITY OF BROOMFIELD, COLORADO, NOT AVAILABLE IN AUTOCAD)

SC-1 Silt Fence (SF)

SILT FENCE INSTALLATION NOTES

1. SILT FENCE MUST BE PLACED AWAY FROM THE TOE OF THE SLOPE TO ALLOW FOR WATER PONDING. SILT FENCE AT THE TOE OF A SLOPE SHOULD BE INSTALLED IN A FLAT LOCATION AT LEAST SEVERAL FEET (2-5 FT) FROM THE TOE OF THE SLOPE TO ALLOW ROOM FOR PONDING AND DEPOSITION.

2. A UNIFORM 6" X 4" ANCHOR TRENCH SHALL BE EXCAVATED USING TRENCHER OR SILT FENCE INSTALLATION DEVICE. NO ROAD GRADERS, BACKHOES, OR SIMILAR EQUIPMENT SHALL BE USED

3. COMPACT ANCHOR TRENCH BY HAND WITH A "JUMPING JACK" OR BY WHEEL ROLLING. COMPACTION SHALL BE SUCH THAT SILT FENCE RESISTS BEING PULLED OUT OF ANCHOR TRENCH BY HAND.

4. SILT FENCE SHALL BE PULLED TIGHT AS IT IS ANCHORED TO THE STAKES. THERE SHOULD BE NO NOTICEABLE SAG BETWEEN STAKES AFTER IT HAS BEEN ANCHORED TO THE STAKES.

5. SILT FENCE FABRIC SHALL BE ANCHORED TO THE STAKES USING 1" HEAVY DUTY STAPLES OR NAILS WITH 1" HEADS. STAPLES AND NAILS SHOULD BE PLACED 3" ALONG THE FABRIC DOWN THE STAKE.

6. AT THE END OF A RUN OF SILT FENCE ALONG A CONTOUR, THE SILT FENCE SHOULD BE TURNED PERPENDICULAR TO THE CONTOUR TO CREATE A "J-HOOK." THE "J-HOOK" EXTENDING PERPENDICULAR TO THE CONTOUR SHOULD BE OF SUFFICIENT LENGTH TO KEEP RUNOFF FROM FLOWING AROUND THE END OF THE SILT FENCE (TYPICALLY 10' - 20').

7. SILT FENCE SHALL BE INSTALLED PRIOR TO ANY LAND DISTURBING ACTIVITIES.

SILT FENCE MAINTENANCE NOTES

1. INSPECT BMPs EACH WORKDAY, AND MAINTAIN THEM IN EFFECTIVE OPERATING CONDITION. MAINTENANCE OF BMPs SHOULD BE PROACTIVE, NOT REACTIVE. INSPECT BMPs AS SOON AS POSSIBLE (AND ALWAYS WITHIN 24 HOURS) FOLLOWING A STORM THAT CAUSES SURFACE EROSION, AND PERFORM NECESSARY MAINTENANCE.

2. FREQUENT OBSERVATIONS AND MAINTENANCE ARE NECESSARY TO MAINTAIN BMPs IN EFFECTIVE OPERATING CONDITION. INSPECTIONS AND CORRECTIVE MEASURES SHOULD BE DOCUMENTED THOROUGHLY.

3. WHERE BMPs HAVE FAILED, REPAIR OR REPLACEMENT SHOULD BE INITIATED UPON DISCOVERY OF THE FAILURE.

4. SEDIMENT ACCUMULATED UPSTREAM OF THE SILT FENCE SHALL BE REMOVED AS NEEDED TO MAINTAIN THE FUNCTIONALITY OF THE BMP, TYPICALLY WHEN DEPTH OF ACCUMULATED SEDIMENTS IS APPROXIMATELY 6".

5. REPAIR OR REPLACE SILT FENCE WHEN THERE ARE SIGNS OF WEAR, SUCH AS SAGGING, TEARING, OR COLLAPSE.

6. SILT FENCE IS TO REMAIN IN PLACE UNTIL THE UPSTREAM DISTURBED AREA IS STABILIZED AND APPROVED BY THE LOCAL JURISDICTION, OR IS REPLACED BY AN EQUIVALENT PERIMETER SEDIMENT CONTROL BMP.

7. WHEN SILT FENCE IS REMOVED, ALL DISTURBED AREAS SHALL BE COVERED WITH TOPSOIL, SEEDED AND MULCHED OR OTHERWISE STABILIZED AS APPROVED BY LOCAL JURISDICTION.

(DETAIL ADAPTED FROM TOWN OF PARKER, COLORADO AND CITY OF AURORA, NOT AVAILABLE IN AUTOCAD)

NOTE: MANY JURISDICTIONS HAVE BMP DETAILS THAT VARY FROM UDFCD STANDARD DETAILS. CONSULT WITH LOCAL JURISDICTIONS AS TO WHICH DETAIL SHOULD BE USED WHEN DIFFERENCES ARE NOTED.

TSIOUVARAS SIMMONS HOLDERNESS
CONSULTING ENGINEERS

FINAL SUBMITTAL - NOVEMBER 26, 2018

Last Modification Date: 12/11/2015 Init.: JAS	Sheet Revisions		
Drawing File Name: 1505480D-DR-SWMP-03.dgn	Date:	Comments	Init.
Horizontal Scale: 1:40 Vert. Scale: As Noted			

DEPARTMENT OF PUBLIC WORKS
201 WEST COLFAX AVENUE
DENVER, CO 80202
PHONE: (720) 913-4501
FAX: (720) 913-4544

As Constructed
No. Revisions:
Revised:
Void:

FESTIVAL STREET
STORMWATER MANAGEMENT PLAN
(DETAILS 1 OF 2)

Designer:	JAS	Structure Numbers	
Detailer:	LAN		
Sheet Subset:	EROS	Subset Sheets:	3 of 4

Project No./Code: _
_
Sheet Number: 21

larry.nichols
8/10/2018
1:31:47 PM
P:\1505480D - CCD 33rd Festival 35th\FESTIVAL STREET PROJECT\DRNG\

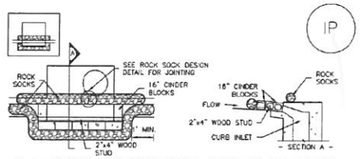

IP-1, BLOCK AND ROCK SOCK SUMP OR ON GRADE INLET PROTECTION

BLOCK AND CURB SOCK INLET PROTECTION INSTALLATION NOTES

1. SEE ROCK SOCK DESIGN DETAIL FOR INSTALLATION REQUIREMENTS.
2. CONCRETE "CINDER" BLOCKS SHALL BE LAID ON THEIR SIDES AROUND THE INLET IN A SINGLE ROW, ABUTTING ONE ANOTHER WITH THE OPEN END FACING AWAY FROM THE CURB.
3. GRAVEL BAGS SHALL BE PLACED AROUND CONCRETE BLOCKS, CLOSELY ABUTTING ONE ANOTHER AND JOINTED TOGETHER IN ACCORDANCE WITH ROCK SOCK DESIGN DETAIL.

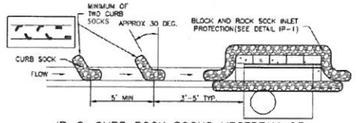

IP-2, CURB ROCK SOCKS UPSTREAM OF INLET PROTECTION

CURB ROCK SOCK INLET PROTECTION INSTALLATION NOTES

1. SEE ROCK SOCK DESIGN DETAIL INSTALLATION REQUIREMENTS.
2. PLACEMENT OF THE SOCK SHALL BE APPROXIMATELY 30 DEGREES FROM PERPENDICULAR IN THE OPPOSITE DIRECTION OF FLOW.
3. SOCKS ARE TO BE FLUSH WITH THE CURB AND SPACED A MINIMUM OF 5 FEET APART.
4. AT LEAST TWO CURB SOCKS IN SERIES ARE REQUIRED UPSTREAM OF ON-GRADE INLETS

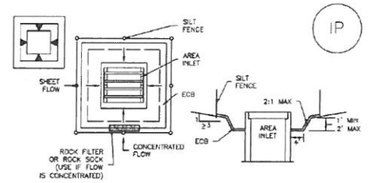

IP-5, OVEREXCAVATION INLET PROTECTION

OVEREXCAVATION INLET PROTECTION INSTALLATION NOTES

1. THIS FORM OF INLET PROTECTION IS PRIMARILY APPLICABLE FOR SITES THAT HAVE NOT YET REACHED FINAL GRADE AND SHOULD BE USED ONLY FOR INLETS WITH A RELATIVELY SMALL CONTRIBUTING DRAINAGE AREA.
2. WHEN USING FOR CONCENTRATED FLOWS, SHAPE BASIN IN 2:1 RATIO WITH LENGTH ORIENTED TOWARDS DIRECTION OF FLOW.
3. SEDIMENT MUST BE PERIODICALLY REMOVED FROM THE OVEREXCAVATED AREA.

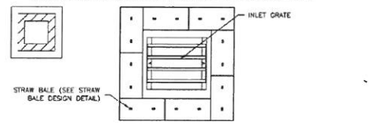

IP-6, STRAW BALE FOR SUMP INLET PROTECTION

STRAW BALE BARRIER INLET PROTECTION INSTALLATION NOTES

1. SEE STRAW BALE DESIGN DETAIL FOR INSTALLATION REQUIREMENTS.
2. BALES SHALL BE PLACED IN A SINGLE ROW AROUND THE INLET WITH ENDS OF BALES TIGHTLY ABUTTING ONE ANOTHER.

Description

Street sweeping and vacuuming remove sediment that has been tracked onto roadways to reduce sediment transport into storm drain systems or a surface waterway.



Photograph SS-1. A street sweeper removes sediment and potential pollutants along the curb line at a construction site. Photo courtesy of Tom Gore.

Appropriate Uses

Use this practice at construction sites where vehicles may track sediment offsite onto paved roadways.

Design and Installation

Street sweeping or vacuuming should be conducted when there is noticeable sediment accumulation on roadways adjacent to the construction site. Typically, this will be concentrated at the entrance/exit to the construction site. Well-maintained stabilized construction entrances, vehicle tracking controls and tire wash facilities can help reduce the necessary frequency of street sweeping and vacuuming.

On smaller construction sites, street sweeping can be conducted manually using a shovel and broom. Never wash accumulated sediment on roadways into storm drains.

Maintenance and Removal

- Inspect paved roads around the perimeter of the construction site on a daily basis and more frequently, as needed. Remove accumulated sediment, as needed.
- Following street sweeping, check inlet protection that may have been displaced during street sweeping.
- Inspect area to be swept for materials that may be hazardous prior to beginning sweeping operations.

Street Sweeping/ Vacuuming	
Functions	
Erosion Control	No
Sediment Control	Yes
Site/Material Management	Yes

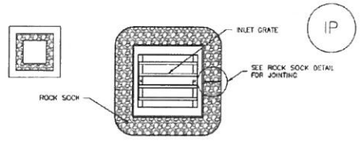

IP-3, ROCK SOCK SUMP/AREA INLET PROTECTION

ROCK SOCK SUMP/AREA INLET PROTECTION INSTALLATION NOTES

1. SEE ROCK SOCK DESIGN DETAIL FOR INSTALLATION REQUIREMENTS.
2. STRAW WATTLES/SEDIMENT CONTROL LOGS MAY BE USED IN PLACE OF ROCK SOCKS FOR INLETS IN PERVIOUS AREAS. INSTALL PER SEDIMENT CONTROL LOG DETAIL.

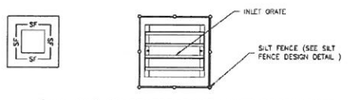

IP-4, SILT FENCE FOR SUMP INLET PROTECTION

SILT FENCE INLET PROTECTION INSTALLATION NOTES

1. SEE SILT FENCE DESIGN DETAIL FOR INSTALLATION REQUIREMENTS.
2. POSTS SHALL BE PLACED AT EACH CORNER OF THE INLET AND AROUND THE EDGES AT A MAXIMUM SPACING OF 3 FEET.
3. STRAW WATTLES/SEDIMENT CONTROL LOGS MAY BE USED IN PLACE OF SILT FENCE FOR INLETS IN PERVIOUS AREAS. INSTALL PER SEDIMENT CONTROL LOG DETAIL.

GENERAL INLET PROTECTION INSTALLATION NOTES

1. SEE PLAN VIEW FOR:
   -LOCATION OF INLET PROTECTION.
   -TYPE OF INLET PROTECTION (IP.1, IP.2, IP.3, IP.4, IP.5, IP.6)
2. INLET PROTECTION SHALL BE INSTALLED PROMPTLY AFTER INLET CONSTRUCTION OR PAVING IS COMPLETE (TYPICALLY WITHIN 48 HOURS). IF A RAINFALL/RUNOFF EVENT IS FORECAST, INSTALL INLET PROTECTION PRIOR TO ONSET OF EVENT.
3. MANY JURISDICTIONS HAVE BMP DETAILS THAT VARY FROM UDFCD STANDARD DETAILS. CONSULT WITH LOCAL JURISDICTIONS AS TO WHICH DETAIL SHOULD BE USED WHEN DIFFERENCES ARE NOTED.

INLET PROTECTION MAINTENANCE NOTES

1. INSPECT BMPs EACH WORKDAY, AND MAINTAIN THEM IN EFFECTIVE OPERATING CONDITION. MAINTENANCE OF BMPs SHOULD BE PROACTIVE, NOT REACTIVE. INSPECT BMPs AS SOON AS POSSIBLE (AND ALWAYS WITHIN 24 HOURS) FOLLOWING A STORM THAT CAUSES SURFACE EROSION, AND PERFORM NECESSARY MAINTENANCE.
2. FREQUENT OBSERVATIONS AND MAINTENANCE ARE NECESSARY TO MAINTAIN BMPs IN EFFECTIVE OPERATING CONDITION. INSPECTIONS AND CORRECTIVE MEASURES SHOULD BE DOCUMENTED THOROUGHLY.
3. WHERE BMPs HAVE FAILED, REPAIR OR REPLACEMENT SHOULD BE INITIATED UPON DISCOVERY OF THE FAILURE.
4. SEDIMENT ACCUMULATED UPSTREAM OF INLET PROTECTION SHALL BE REMOVED AS NECESSARY TO MAINTAIN BMP EFFECTIVENESS, TYPICALLY WHEN STORAGE VOLUME REACHES 50% OF CAPACITY. A DEPTH OF 6" WHEN SILT FENCE IS USED, OR ½ OF THE HEIGHT FOR STRAW BALES.
5. INLET PROTECTION IS TO REMAIN IN PLACE UNTIL THE UPSTREAM DISTURBED AREA IS PERMANENTLY STABILIZED, UNLESS THE LOCAL JURISDICTION APPROVES EARLIER REMOVAL OF INLET PROTECTION IN STREETS.
6. WHEN INLET PROTECTION AT AREA INLETS IS REMOVED, THE DISTURBED AREA SHALL BE COVERED WITH TOP SOIL, SEEDED AND MULCHED, OR OTHERWISE STABILIZED IN A MANNER APPROVED BY THE LOCAL JURISDICTION.

(DETAIL ADAPTED FROM TOWN OF PARKER, COLORADO AND CITY OF AURORA, COLORADO, NOT AVAILABLE IN AUTOCAD)

NOTE: MANY JURISDICTIONS HAVE BMP DETAILS THAT VARY FROM UDFCD STANDARD DETAILS. CONSULT WITH LOCAL JURISDICTIONS AS TO WHICH DETAIL SHOULD BE USED WHEN DIFFERENCES ARE NOTED.

NOTE: THE DETAILS INCLUDED WITH THIS FACT SHEET SHOW COMMONLY USED, CONVENTIONAL METHODS OF INLET PROTECTION IN THE DENVER METROPOLITAN AREA. THERE ARE MANY PROPRIETARY INLET PROTECTION METHODS ON THE MARKET. UDFCD NEITHER ENDORSES NOR DISCOURAGES USE OF PROPRIETARY INLET PROTECTION; HOWEVER, IN THE EVENT PROPRIETARY METHODS ARE USED, THE APPROPRIATE DETAIL FROM THE MANUFACTURER MUST BE INCLUDED IN THE SWMP AND THE BMP MUST BE INSTALLED AND MAINTAINED AS SHOWN IN THE MANUFACTURER'S DETAILS.

NOTE: SOME MUNICIPALITIES DISCOURAGE OR PROHIBIT THE USE OF STRAW BALES FOR INLET PROTECTION. CHECK WITH LOCAL JURISDICTION TO DETERMINE IF STRAW BALE INLET PROTECTION IS ACCEPTABLE.

FINAL SUBMITTAL - NOVEMBER 26, 2018

TSIOUVARAS SIMMONS HOLDERNESS
CONSULTING ENGINEERS

Last Modification Date: 12/11/2015 Init.: JAS	Sheet Revisions			DEPARTMENT OF PUBLIC WORKS	As Constructed
Drawing File Name: 1505480D-DR-SWMP-04.dgn	Date:	Comments	Init.	201 WEST COLFAX AVENUE	No Revisions:
Horizontal Scale: 1:40 Vert. Scale: As Noted				DENVER, CO 80202	Revised:
				PHONE: (720) 913-4501	Void:
				FAX: (720) 913-4544	

FESTIVAL STREET STORMWATER MANAGEMENT PLAN (DETAILS 2 OF 2)				Project No./Code
Designer: JAS	Structure Numbers			-
Detailer: LAN				-
Sheet Subset: EROS	Subset Sheets: 4 of 4			Sheet Number 22

larry.nichols
8/10/2018
1:31:55 PM
P:\1505480D - CCD 33rd Festival 35th\FESTIVAL STREET PROJECT\DRNG\

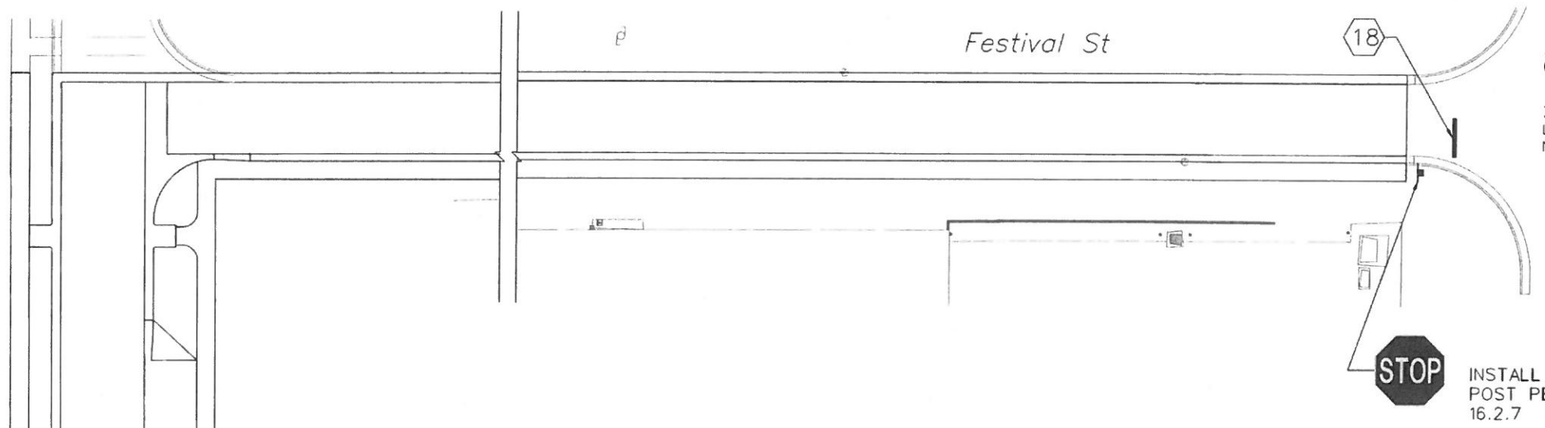

COLORADO LICENSED
CHARLES D. ALEXANDER
49117
PROFESSIONAL ENGINEER
11/27/2018

TRAFFIC LANE PAVEMENT MARKINGS GENERAL NOTES

A. EPOXY PAVEMENT MARKING MATERIAL SHALL BE USED UNLESS OTHERWISE APPROVED BY T.E.S.

B. CROSSWALK MARKINGS - MATERIAL SHALL BE REFLECTORIZED PREFORMED THERMO-PLASTIC (MIN. 90 MIL THICKNESS) FULL WIDTH WITHOUT SEAMS UNLESS OTHERWISE SPECIFIED.

(17) 24" X 10' WHITE CROSSWALK BAR

(18) 24" WHITE STOP LINE, ONLY WHEN SHOWN ON PLANS

C. ANY FINAL PAVEMENT MARKING QUANTITIES SHALL INCLUDE REMOVAL OF ANY CONFLICTING, PREVIOUS OR DETOUR MARKINGS AS NECESSARY.

D. ALL OTHER PROVISIONS OF "CITY AND COUNTY OF DENVER STANDARDS AND SPECIFICATION" AND "STANDARD SPECIFICATIONS FOR ROAD AND BRIDGE CONSTRUCTION", STATE DEPARTMENT OF HIGHWAYS, STATE OF COLORADO, CURRENT EDITION(S) SHALL APPLY.

E. ALL REMOVALS SHALL BE BY GRINDING, SANDBLASTING OR WATER BLASTING METHODS PROVIDED THAT THE PAVEMENT SURFACE SHALL NOT BE MATERIALLY DAMAGED. THE PAVEMENT MARKINGS SHALL BE REMOVED TO THE EXTENT THAT THEY SHALL NOT BE VISIBLE UNDER DAY OR NIGHT CONDITIONS.

ITEM #	ITEM DESCRIPTION	UNIT	TOTAL
Stop Bar Line	24" Solid White Plastic Tape (Preformed Thermoplastic)	LF	10
~~Crosswalk~~	~~2' x 10' White Panel (Preformed Thermoplastic)~~	~~SF~~	~~-~~
Sign Post	Sign Post per Standard Drawing No 16.2.7	EA	1
R1-1	"STOP" (White on Red)	EA	1

TRAFFIC CONTROL AT THE 33RD STREET/BRIGHTON BOULEVARD INTERSECTION, INCLUDING SIGNING AND PAVEMENT MARKINGS, SHALL BE INSTALLED BY THE BRIGHTON BOULEVARD PROJECT. IF TRAFFIC CONTROL AT THIS INTERSECTION INCLUDING STOP SIGN, STOP BAR AND CROSSWALK IS NOT INSTALLED BY THE BRIGHTON BOULEVARD PROJECT, IT SHALL BE INSTALLED BEFORE 33RD STREET IS OPENED.

20 0 20 40
1" = 20' GRAPHIC SCALE

FEHR & PEERS
621 17th Street Suite 2301 Denver, CO 80293 (303) 296-4300

FINAL SUBMITTAL - NOVEMBER 26, 2018

CCD 33rd Festival 35th\FESTIVAL STREET PROJECT\ROW\
Charlie.Lim
8/10/2018
10:55:07 AM
P:\15054800

Last Modification Date:	Init.:	
Drawing File Name: 15-0501_Striping-100.dwg		
Horizontal Scale: 1:2	Vert. Scale: As Noted	

Sheet Revisions

Date:	Comments	Init.

DEPARTMENT OF PUBLIC WORKS
201 WEST COLFAX AVENUE
DENVER, CO 80202
PHONE: (720) 913-4501
FAX: (720) 913-4544

As Constructed
No Revisions:
Revised:
Void:

33RD STREET AND FESTIVAL STREET
STRIPING PLAN, GENERAL NOTES, QUANTITIES

Designer:	CA	Structure Numbers	
Detailer:	JM		
Sheet Subset:	STRIPING	Subset Sheets:	1 of 2

Project No./Code
-
-
Sheet Number 23

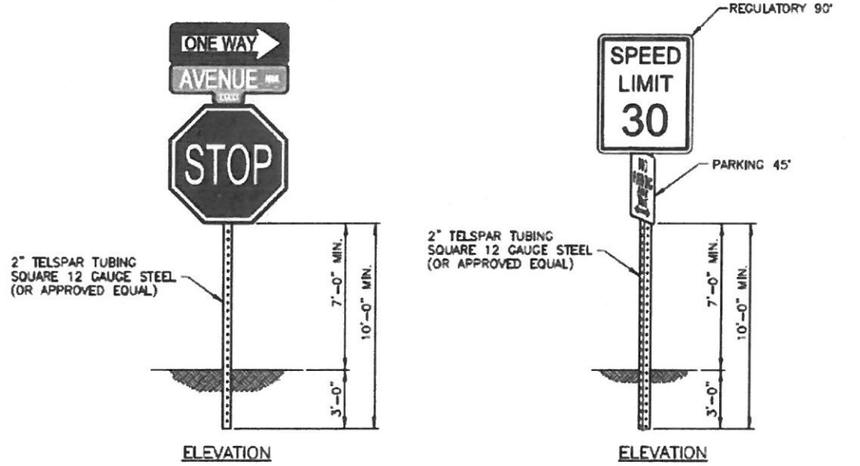

NOTE

SIGNS: ALL SIGNS SHALL BE FABRICATED FROM ASTM TYPE XI, 4000 SERIES SIGN FACE SHEETING MATERIAL. ALL SIGNS ARE 0.080 GAUGE, 6061-T6 OR 5052-H38 ALUMINUM ALLOY, TREATED WITH ALONDINE 1200 CONVERSION COATING, 3/8 INCH DIAMETER HOLES PUNCHED, CENTERED ON TOP AND BOTTOM, HORIZONTAL AXIS WITH STANDARD 1-1/2 INCH RADIUS CORNERS. ALL IMAGING SHALL BE ACCOMPLISHED WITH A MATCH COMPONENT SYSTEM WITH ACRYLIC FILM THAT MATCHES THE WARRANTY OF THE BASE REFLECTIVE SHEETING. INKS SHALL NOT BE PERMITTED FOR IMAGING.

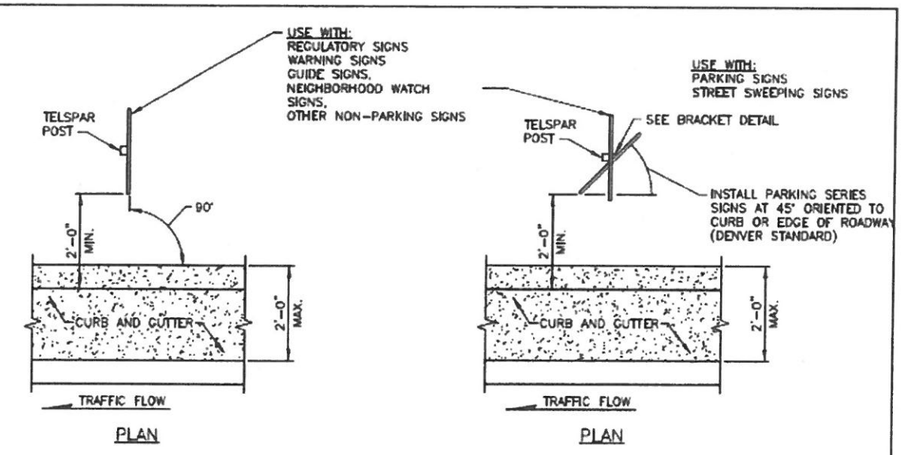

ROADSIDE SIGN INSTALLATION

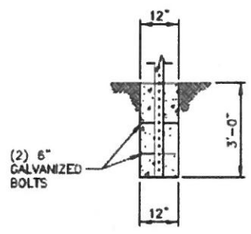

DETAIL 1
MOUNTED IN DIRT

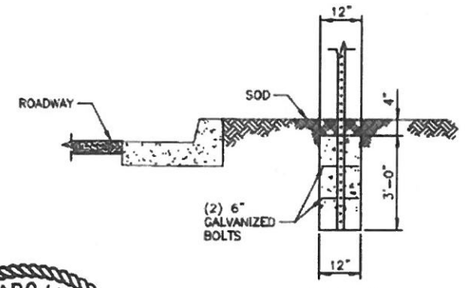

DETAIL 2
MOUNTED IN SOD/VEGETATION

NOTE
MOUNTING IN SOD OR DIRT REQUIRES APPROXIMATELY 3.0 CU. FT. OF CONCRETE.

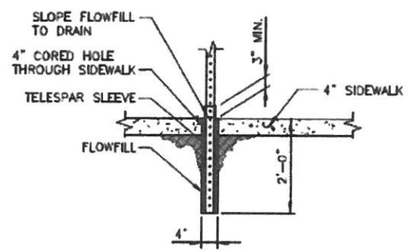

DETAIL 3
MOUNTED IN SIDEWALK/HARDSCAPE

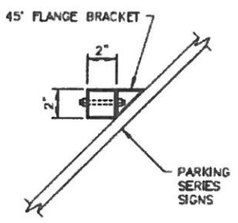

BRACKET DETAIL

COLORADO LICENSED
CHARLES D. ALEXANDER
49117
PROFESSIONAL ENGINEER

4/27/2018

CITY & COUNTY OF DENVER

MULTIPLE SIGN POST MOUNTING DETAILS

STD DWG NO 16.2.7

DATE 1/12/12

FEHR & PEERS
621 17th Street, Suite 2301, Denver, CO 80293, (303) 296-4300

Last Modification Date:	Init.:		
Drawing File Name: 15-0501_Striping-101.dwg			
Horizontal Scale: 1:2	Vert. Scale: As Noted		

Sheet Revisions

Date:	Comments	Init.

DEPARTMENT OF PUBLIC WORKS
201 WEST COLFAX AVENUE
DENVER, CO 80202
PHONE: (720) 913-4501
FAX: (720) 913-4544

As Constructed
No Revisions:
Revised:
Void:

FESTIVAL STREET
POST DETAIL

Designer:	CA	Structure Numbers	
Detailer:	JM		
Sheet Subset:	STRIPING	Subset Sheets:	2 of 2

Project No./Code
-
-
Sheet Number 24

FINAL SUBMITTAL - NOVEMBER 26, 2018

Charlie Lim
9/10/2018
10:57:36 AM
P:\15054600 - CCD 33rd Festival 35th\FESTIVAL STREET PROJECT\RBW\

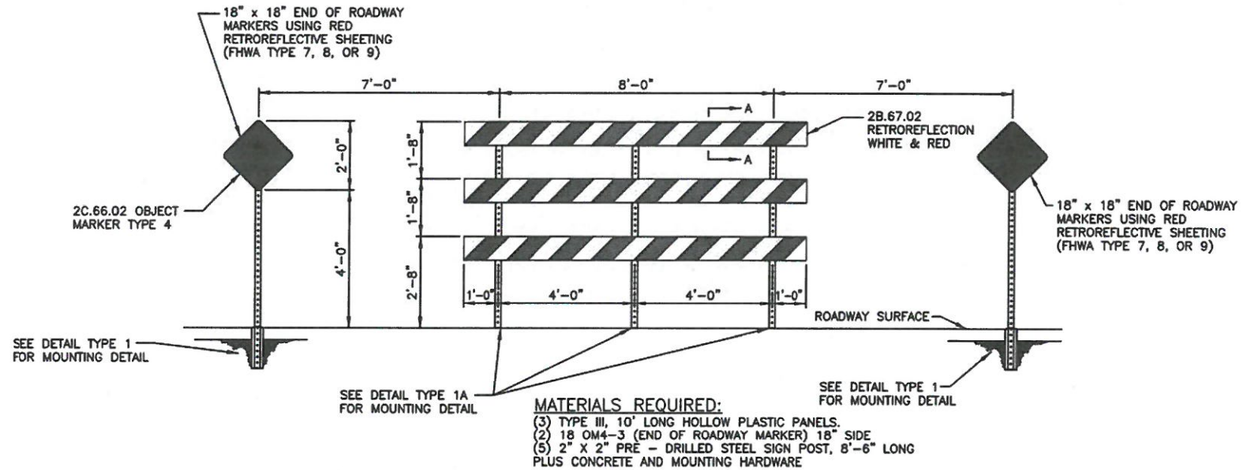

MATERIALS REQUIRED:
(3) TYPE III, 10' LONG HOLLOW PLASTIC PANELS.
(2) 18 OM4-3 (END OF ROADWAY MARKER) 18" SIDE
(5) 2" X 2" PRE - DRILLED STEEL SIGN POST, 8'-6" LONG
PLUS CONCRETE AND MOUNTING HARDWARE

ELEVATION - END OF ROADWAY BARRICADE DETAIL

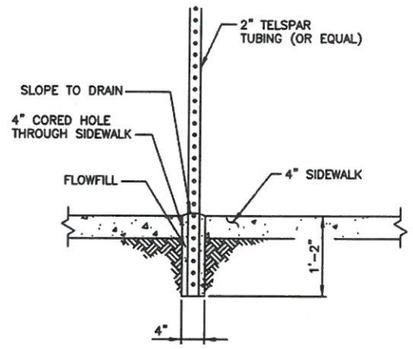

DETAIL - TYPE 1

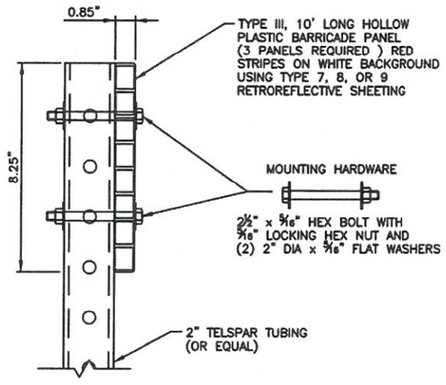

SECTION A

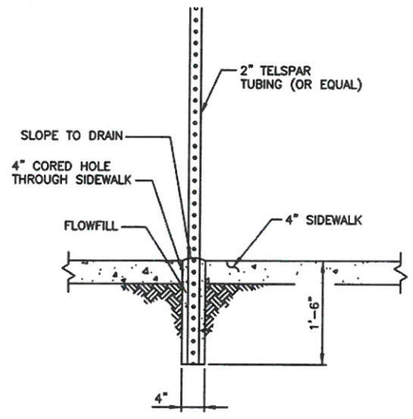

DETAIL - TYPE 1A

CITY & COUNTY OF DENVER

BARRICADE DETAILS

STD DWG NO 16.2.15

DATE 1/12/12

COLORADO LICENSED RANDAL LAPSLEY 28785 11/20/18 PROFESSIONAL ENGINEER

TSIOUVARAS SIMMONS HOLDERNESS
CONSULTING ENGINEERS

FINAL SUBMITTAL - NOVEMBER 26, 2018

LimC
10/15/2018
3:40:00 PM
P:\1505480D - CCD 33rd Festival 35th\FESTIVAL STREET PROJECT\RDWY\

Last Modification Date:	Init.:
Drawing File Name: 1505480D-RD-DETAILS-03.dgn	
Horizontal Scale: 1:2	Vert. Scale: As Noted

Sheet Revisions		
Date:	Comments	Init.

DEPARTMENT OF PUBLIC WORKS
201 WEST COLFAX AVENUE
DENVER, CO 80202
PHONE: (720) 913-4501
FAX: (720) 913-4544

As Constructed

No Revisions:	
Revised:	
Void:	

FESTIVAL STREET
END OF ROADWAY BARRICADE DETAIL

Designer:	CCL	Structure Numbers	
Detailer:	CCL		
Sheet Subset:	DETAIL	Subset Sheets:	1 of 1

Project No./Code
-
-

Sheet Number 25

RIVER NORTH PARK

BID SET

OCTOBER 2018

WENK PROJECT NO. 15014.00 DPW PROJECT CONTROL NO. 2016-PROJMSTR-00000124

NORTHEAST QUARTER OF SECTION 27, TOWNSHIP 3 SOUTH, RANGE 68 WEST OF THE SIXTH PRINCIPAL MERIDIAN

SHEET INDEX

COVER SHEETS
CV1.0 GENERAL NOTES

EXISTING CONDITIONS
EX1.1 - 1.2 EXISTING CONDITIONS

EROSION CONTROL
C3.1 EROSION CONTROL PLAN (INITIAL)
C3.2 EROSION CONTROL PLAN (INTERIM)
C3.3 EROSION CONTROL PLAN (FINAL)

DEMOLITION
DM1.1 - 1.2 DEMOLITION PLANS

GRADING/CIVIL
C2.0 NOTES
C2.1 OVERALL GRADING & UTILITY PLAN
C2.2-2.5 DETAILED GRADING PLANS

STORMWATER
C5.1-5.2 POND DETAILS
C5.3 STORM SEWER PLAN & PROFILE
C5.4 STORM SEWER DETAILS
C5.5 DRAINAGE MAP

UTILTIES
C6.0 WATER COVER SHEET
C6.1 WATER LINE NOTES & DETAILS
C6.2 WATER ONLY PLAN
C6.3 OVERALL UTILITY PLAN

LAYOUT & MATERIALS
L1.0 OVERALL LAYOUT PLAN & NOTES
L1.1 - L1.2 LAYOUT & MATERIALS PLANS
L1.3 - L1.4 SOILS & MULCHING PLANS
L3.0 - L3.1 LANDSCAPE SECTIONS
L4.1 - L4.15 LANDSCAPE DETAILS

PLANTING
PL1.0 PLANTING NOTES & PLANT SCHEDULE
PL1.1 - PL1.4 PLANTING PLANS
PL4.1 - PL4.2 PLANTING DETAILS

IRRIGATION
IR-1 IRRIGATION SCHEDULE AND NOTES
IR-2 IRRIGATION HYDROZONE PLAN
IR-3 IRRIGATION CHARTS
IR-4 IRRIGATION PLAN
IR-5 - IR-10 IRRIGATION DETAILS

LIGHTING & ELECTRICAL
LE0.0 COVER SHEET
LE1.1 SITE ELECTRICAL PLAN
LE2.1 SITE LIGHTING PLAN
LE4.0 ELECTRICAL ONE-LINE
LE5.0 ELECTRICAL DETAILS
LE6.0 ELECTRICAL SCHEDULES

FURNISHINGS & SITE ELEMENTS
F1-6 SITE FURNISHINGS & SITE ELEMENTS
F7-8 ELECTRICAL ENCLOSURES

VICINITY MAP

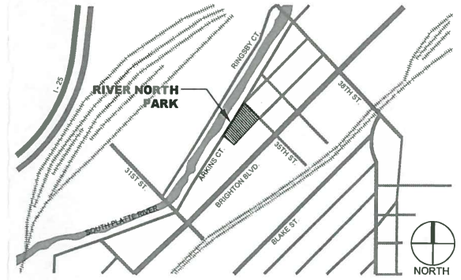

City and County of Denver
Parks and Recreation Department
Checked for General Compliance with applicable Denver Criteria, Rules, Regulations and Standards.

APPROVED (if validly signed)

Approved by: Director of Planning — Date: 11.20.18

(Note: Signature in Print) GORDON ROBERTSON

APPROVED AS TO FORM.
DRAWINGS AND DESIGN ADEQUACY ARE ACCEPTED BASED UPON THE PROJECT LANDSCAPE ARCHITECT'S ATTACHED SEAL OF REGISTRATION.

(Project Landscape Architect's Professional Seal, Signature and Date)

CITY AND COUNTY OF DENVER DEPARTMENT OF PUBLIC WORKS

APPROVED BY:

EXECUTIVE DIRECTOR OF PUBLIC WORKS — DATE 11.28.18

CITY ENGINEER — DATE 11.28.18

DIRECTOR OF ENGINEERING CAPITAL PROJECTS — DATE 11/27/18

CITY TRAFFIC ENGINEER — DATE 11/27/18

Landscape Architect-Prime Consultant
Nicole Horst/Tyrel Sturgeon
Wenk Associates, Inc.
1130 31st Street, Suite 101
Denver, Colorado 80205
303.628.0003

Civil Engineering
Jay Peters
EES, Inc.
518 17th Street, Suite 1575
Denver, Colorado 80202
303.572.7997

Structural Engineering
Leslie Tyson
LT Engineering, LLC
5620 Zuni Street
Denver, Colorado 80221
303.477.3861

Irrigation
Ken DiPaolo
Hydosystems KDI, Inc.
860 Tabor Street, Suite 200
Lakewood, Colorado 80401
303.980.5327

Lighting & Electrical
Gregg Adams
BCER Engineering, Inc.
5420 Ward Rd, Suite 200
Arvada, CO 80002
303.463.7772

Geotechnical
Don Hunt
Rocksol Consulting Group, Inc.
6510 W. 91st Ave, Suite 130
Westminster, CO 80031
303.962.9300

Architecture/Art
Mike Moore / Jack Ricci
tres birds workshop
3821 Steele Street, Unit B
Denver, CO 80205
303.442.3790

Denver Parks & Rec Project Manager
Owen Snell - PM
City and County of Denver
720.913.0618

wenk ASSOCIATES PLANNERS & LANDSCAPE ARCHITECTS 303.628.0003

DENVER THE MILE HIGH CITY

GENERAL NOTES

1. SURVEY WAS PERFORMED BY EV STUDIO CIVIL ENGINEERING/ALTITUDE LAND CONSULTANTS, INC. SURVEY DATED 01/27 /16 UNDER CONTRACT WITH THE CITY OF DENVER. EXISTING CONTOUR INTERVAL IS 1 FOOT.

2. PRIOR TO BEGINNING WORK ON THE PROJECT, THE CONTRACTOR'S SURVEYOR SHALL PERFORM A SURVEY TO VERIFY ALL SURVEY CONTROL POINTS, CITY OF DENVER RANGE POINTS, SECTION CORNERS, AND BENCHMARKS AS SHOWN ON THE SURVEY CONTROL DIAGRAM. THE CONTRACTOR SHALL BE RESPONSIBLE FOR REPLACING ALL LAND SURVEY MONUMENTS DISRUPTED BY CONSTRUCTION ACTIVITIES OR BY NEGLIGENCE ON THE PART OF THE CONTRACTOR. THE CONTRACTOR IS REQUIRED TO FOLLOW COLORADO STATE LAW REGARDING SURVEY MONUMENTS. THE CONTRACTOR SHALL RETAIN A COLORADO LICENSED PROFESSIONAL LAND SURVEYOR TO RESET ANY AFFECTED SURVEY MONUMENTS. THIS WILL NOT BE PAID SEPARATELY, BUT SHALL BE INCLUDED IN THE WORK UNLESS SPECIFIED OTHERWISE IN SECTION 629. FOR FURTHER INFORMATION CONTACT:
   PUBLIC WORKS - SURVEY DEPARTMENT
   ATTN: CITY SURVEYOR
   201 W. COLFAX AVE.
   DENVER, CO 80202
   720-865-3121

3. CONTRACTOR SHALL MAINTAIN AND PRESERVE EXISTING MONUMENTS, BENCHMARKS, AND CONTROL POINTS.

4. ANY PERSON WHO KNOWINGLY REMOVES, ALTERS, OR DEFACES ANY PUBLIC LAND SURVEY MONUMENT AND/OR BOUNDARY MONUMENT OR ACCESSORY, COMMITS A CLASS TWO (2) MISDEMEANOR PURSUANT TO STATE STATUTE C.R.S. SECTION 18-4-508.

5. THE OWNER WILL PROVIDE ALL ELECTRONIC FILES OF THESE DOCUMENTS. THE ELECTRONIC FILES ARE FOR USE BY THE CONTRACTOR FOR LAYOUT OF ALL IMPROVEMENTS AT CONTRACTORS RISK. CONSTRUCTION IS TO OCCUR FROM ORIGINAL PRINTED SET.

3. LOCATIONS OF UTILITIES ARE GRAPHIC ONLY AND MAY NOT REPRESENT ACTUAL FIELD CONDITIONS. CONTRACTOR SHALL CALL UTILITY NOTIFICATION CENTER OF COLORADO (UNCC) 1-800-922-1987 TO LOCATE ALL UTILITIES PRIOR TO COMMENCING WORK. CONTRACTOR SHALL VERIFY LOCATIONS AND BURY DEPTHS OF ALL UTILITIES ON SITE. THE CONTRACTOR SHALL BE RESPONSIBLE FOR PROTECTING UTILITIES DURING CONSTRUCTION AND SHALL HOLD THE CITY AND ITS ENGINEERS HARMLESS FOR DAMAGES ARISING FROM THE CONTRACTOR'S FAILURE TO ADEQUATELY PROTECT EXISTING UTILITIES. DAMAGED UTILITIES SHALL BE REPAIRED BY AND AT THE EXPENSE OF THE CONTRACTOR.

4. THE CONTRACTOR IS REQUIRED TO RESET, ADJUST OR REPLACE ANY UTILITIES THAT ARE IMPACTED BY CONSTRUCTION AND ARE DESIGNED TO REMAIN WITHIN THE PROJECT LIMITS.

5. LOCATIONS FOR POTHOLING SHALL BE AS APPROVED BY THE PROJECT MANAGER.

6. DAMAGED UTILITIES SHALL BE REPAIRED AT THE CONTRACTORS EXPENSE. IT SHALL BE THE RESPONSIBILITY OF THE CONTRACTOR TO MAINTAIN AND PROVIDE FOR ADEQUATE DRAINAGE THROUGH THE SITE DURING THE PROCESS OF EXCAVATION, GRADING AND EMBANKMENT. THE GRADE SHALL BE MAINTAINED IN SUCH CONDITION THAT IT IS WELL DRAINED AT ALL TIMES.

7. ALL WORK AND MATERIALS SHALL CONFORM TO URBAN DRAINAGE & FLOOD CONTROL, DENVER PARKS, AND CITY & COUNTY OF DENVER STANDARDS, REGULATIONS, AND CODES FOR DESIGN AND CONSTRUCTION OF PUBLIC IMPROVEMENTS. THE CITY RESERVES THE RIGHT TO ACCEPT OR REJECT ANY MATERIALS AND WORKMANSHIP THAT DOES NOT CONFORM TO THE LATEST EDITION OF THE CITY STANDARDS SPECIFICATIONS, OR HALT CONSTRUCTION UNTIL THE CONFLICT IS RESOLVED.

8. PROPOSED FINISHED GRADES AND PAVEMENTS SHALL ABUT EXISTING CURBS, PAVEMENTS, ETC., IN BOTH LINE AND GRADE. CONTRACTOR SHALL NOTIFY THE OWNER'S REPRESENTATIVE IMMEDIATELY OF ANY DISCREPANCIES.

9. CONTRACTOR SHALL NOT WILLFULLY PROCEED WITH CONSTRUCTION AS DESIGNED WHEN IT IS OBVIOUS THAT PREVIOUSLY UNKNOWN OBSTRUCTIONS AND/OR GRADE DIFFERENCES EXIST THAT MAY NOT HAVE BEEN KNOWN DURING DESIGN. SUCH CONDITIONS SHALL BE IMMEDIATELY BROUGHT TO THE ATTENTION OF THE OWNER'S REPRESENTATIVE FOR DECISION. THE CONTRACTOR SHALL ASSUME FULL RESPONSIBILITY FOR ALL NECESSARY REVISIONS AND REPAIRS DUE TO FAILURE TO GIVE SUCH NOTIFICATION AT NO ADDITIONAL COST TO OWNER.

10. CONTRACTOR SHALL OBTAIN, ALL APPLICABLE CODES, LICENSES, PERMITS, BONDS, ETC. NECESSARY TO PERFORM THE PROPOSED WORK 72 HOURS PRIOR TO THE START OF ANY CONSTRUCTION. THE CONTRACTOR IS RESPONSIBLE FOR BEING AWARE OF, NOTIFYING, COORDINATING AND SCHEDULING ALL INSPECTIONS REQUIRED FOR FINAL APPROVALS AND PROJECT ACCEPTANCE. ALL WORK, INCLUDING CORRECTION WORK, IS SUBJECT TO NOTIFICATION AND INSPECTION REQUIREMENTS.

11. THE CONTRACTOR SHALL HAVE ONSITE AT ALL TIMES, ONE COPY OF THE APPROVED PLANS, ONE COPY OF THE APPROPRIATE STANDARDS AND SPECIFICATIONS, AND COPIES OF ANY PERMITS AND EXTENSION AGREEMENTS NEEDED FOR THE JOB.

12. THE CONTRACTOR SHALL SUBMIT A BICYCLE/PEDESTRIAN TRAFFIC DETOUR PLAN AND A VEHICULAR TRAFFIC DETOUR PLAN, FOR APPROVAL PRIOR TO CONSTRUCTION. CONTRACTOR IS RESPONSIBLE FOR PROVIDING A TRAFFIC CONTROL PLAN TO THE CITY FOR ALL WORK IN THE RIGHT-OF-WAY AND SITE ACCESS FROM 35TH STREET. A COPY OF APPROVED TCPS MUST BE AVAILABLE ON SITE DURING WORK. THE CONTRACTOR SHALL PROVIDE LIGHTS, SIGNS, BARRICADES, FLAG MEN, OR OTHER DEVICES NECESSARY TO PROVIDE FOR PUBLIC SAFETY, CUSTOMER ACCESS, AND SAFE TRAFFIC IN ACCORDANCE WITH THE MUTCD, CURRENT EDITION. BICYCLE/PEDESTRIAN THROUGH TRAFFIC SHALL BE MAINTAINED DURING THE DURATION OF CONSTRUCTION. BICYCLE/PEDESTRIAN DETOUR SHALL BE INSPECTED DAILY WITH LOG.

13. CONTRACTOR SHALL NOTIFY THE OWNER'S REPRESENTATIVE 72 HOURS PRIOR TO START OF ANY CONSTRUCTION. IF WORK IS SUSPENDED FOR ANY PERIOD OF TIME AFTER INITIAL START-UP, THE CONTRACTOR SHALL NOTIFY THE OWNER'S REPRESENTATIVE OF REASON FOR SUSPENSION AND ESTIMATED TIME OF SUSPENSION WITHIN 48 HOURS OF SUSPENSION . CONTRACTOR SHALL NOTIFY THE OWNER'S REPRESENTATIVE 48 HOURS PRIOR TO RESTART OF CONSTRUCTION.

OVERALL PLAN

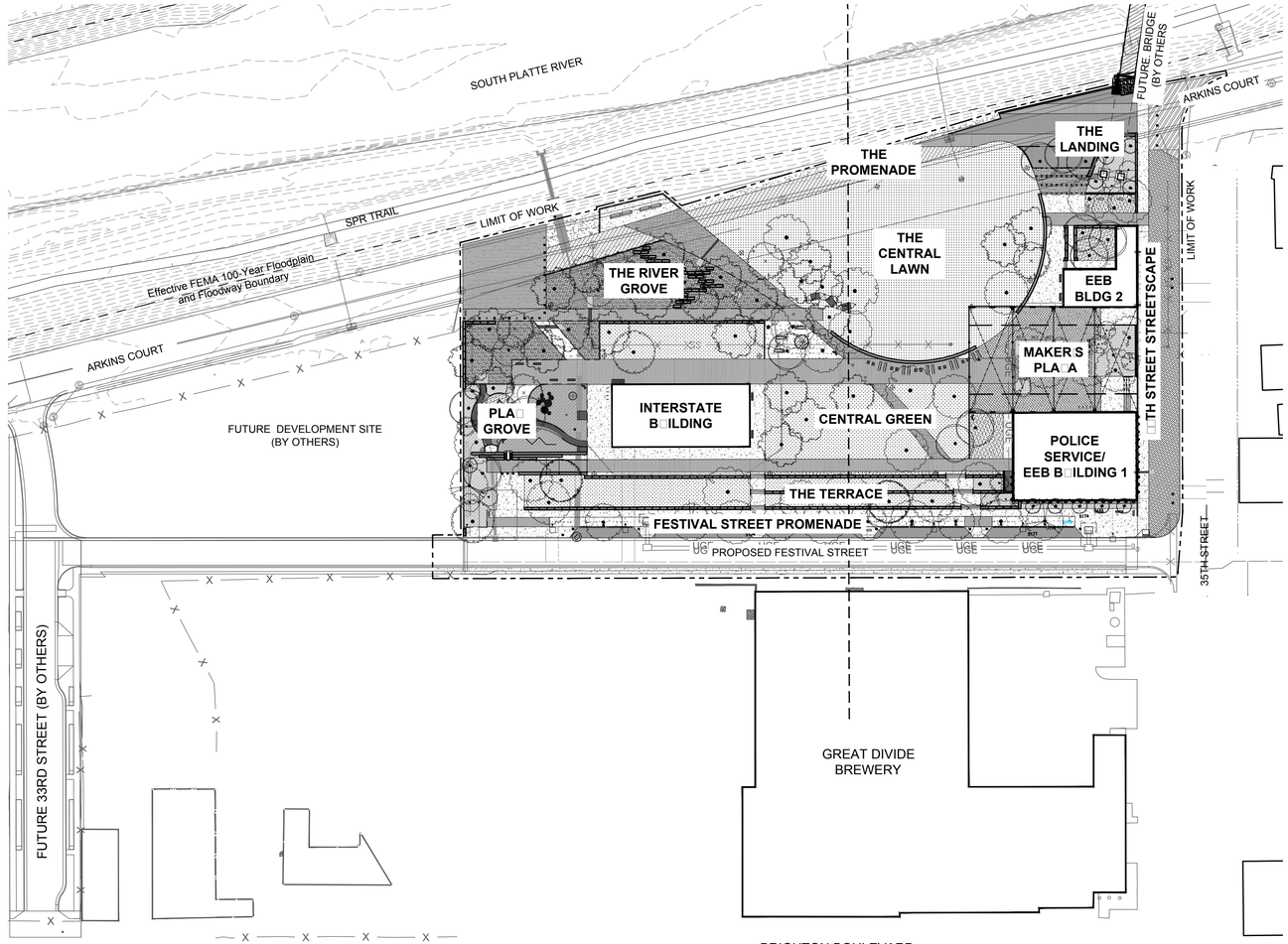

PLANT MATERIAL LEGEND

- ASPHALT PAVING - EXISTING
- ASPHALT PAVING - NEW
- CONCRETE PAVING - STANDARD FINISH
- CONCRETE PAVING - TINED FINISH
- CONCRETE PAVING - SAND FINISH
- CONCRETE PAVING - EXISTING (TEXTURED)
- CONCRETE PAVING - RECYCLED SLAB
- CONCRETE UNIT PAVERS - PERMEABLE
- CRUSHER FINES PAVING
- WATER QUALITY POND
- GROUTED COBBLE SWALE
- ENGINEERED WOOD FIBER
- ROAD BASE MATERIAL
- CONCRETE WALL
- MSE WALL
- CONCRETE BIN BLOCK WALL
- CONCRETE BAND
- CHASE DRAIN
- TRENCH GRATE
- HANDRAIL
- WOOD BENCH
- UNDERDRAIN
- CLEANOUT
- BOLLARD (6"Ø)
- BOLLARD (6"Ø) - REMOVABLE
- BOLLARD (6"Ø) - LIGHTED
- BOLLARD (9"Ø) - POWERED
- BOLLARD (9"Ø)
- ART
- ELECTRICAL ENCLOSURE
- FIRE LANE
- EFFECTIVE FEMA 100-YEAR FLOODPLAIN AND FLOODWAY BOUNDARY

14. PRIOR TO THE COMMENCEMENT OF CONSTRUCTION, ALL STORM DRAIN INLETS, LATERALS, MAINS AND OTHER STORM RUNOFF APPURTENANCES WITHIN THE PROJECT LIMITS SHALL BE CLEARED OF SEDIMENT AND DEBRIS IN ACCORDANCE WITH DENVER WASTEWATER MANAGEMENT DIVISION STANDARDS. AFTER CONSTRUCTION, THE CONTRACTOR SHALL REMOVE ANY SEDIMENT OR DEBRIS FROM THE STORM SEWER SYSTEM AT NO COST TO THE CITY.

15. PRIOR TO FINAL ACCEPTANCE, ALL DISTURBED PORTIONS OF ROADWAY ROW SHALL BE CLEANED UP AND RESTORED TO THEIR ORIGINAL CONDITION, SUBJECT TO CITY APPROVAL.

16. PROTECTION AND REPLACEMENT OF STREET IMPROVEMENTS ARE THE RESPONSIBILITY OF THE CONTRACTOR UNTIL THESE IMPROVEMENTS ARE FULLY COMPLETED AND ACCEPTED BY THE CITY.

17. ALL MATERIAL, EQUIPMENT, INSTALLATION AND CONSTRUCTION WITHIN THE ROW SHALL BE IN ACCORDANCE WITH THE LATEST EDITION OF THE FOLLOWING STANDARD REFERENCES AS APPLICABLE:
   a. CITY AND COUNTY OF DENVER, STANDARDS AND DETAILS FOR ENGINEERING DIVISION
   b. STORM DRAINAGE AND SANITARY SEWER CONSTRUCTION DETAIL AND TECHNICAL SPECIFICATIONS
   c. DEPARTMENT OF PUBLIC WORKS STANDARD SPECIFICATIONS FOR CONSTRUCTION GENERAL CONTRACT CONDITIONS
   d. WASTEWATER MANAGEMENT DIVISION STANDARD DETAILS
   e. TRAFFIC STANDARD DRAWINGS AND TRAFFIC ENGINEERING SERVICES PROJECT SPECIALS
   f. COLORADO DEPARTMENT OF TRANSPORTATION (CDOT) STANDARD SPECIFICATIONS FOR ROAD AND BRIDGE CONSTRUCTION AND STANDARD PLANS, (M&S STANDARDS)
   g. FEDERAL HIGHWAY ADMINISTRATION (FHWA), MANUAL ON UNIFORM TRAFFIC CONTROL DEVICES (MUTCD) FOR STREETS AND HIGHWAYS AND THE COLORADO SUPPLEMENT THERETO
   h. AMERICAN ASSOCIATION OF STATE AND HIGHWAY TRANSPORTATION OFFICIALS (AASHTO) ROADSIDE DESIGN GUIDE

12. CONTRACTOR SHALL OBTAIN OWNER'S REPRESENTATIVE APPROVAL PRIOR TO REMOVAL OF ANY OBSTRUCTION INTERFERING WITH PROPOSED IMPROVEMENTS UNLESS EXPLICITLY STATED IN PLANS.

13. CONTRACTOR SHALL BE RESPONSIBLE FOR REPLACING EXISTING PAVEMENT MARKINGS, SIGNING, LANDSCAPE, IRRIGATION, HARDSCAPE, OR OTHER ITEMS, PUBLIC OR PRIVATE, THAT HAVE BEEN DAMAGED DURING CONSTRUCTION AT CONTRACTOR'S EXPENSE.THE CONTRACTOR SHALL PROMPTLY REPAIR OR REPLACE SUCH PROPERTY, TO THE SATISFACTION OF THE PROJECT MANAGER, BEFORE THE CITY WILL ACCEPT OR PAY FOR THE WORK PERFORMED UNDER THE CONTRACT. IF THE CONTRACTOR FAILS TO REPAIR OR REPLACE SUCH PROPERTY, THE CITY, AT THE SOLE DISCRETION OF THE MANAGER, MAY UNDERTAKE SUCH REPAIR OR REPLACEMENT AND DEDUCT THE COST OF THE SAME FROM AMOUNTS PAYABLE TO THE CONTRACTOR UNDER THE CONTRACT. CONTRACTOR SHALL PROTECT ALL ADJACENT IMPROVEMENTS (BUILDINGS, ROADS, LANDSCAPE AREAS, ETC.) FROM DAMAGE AND EROSION DUE TO CONSTRUCTION ACTIVITIES. ALL DISTURBED AREAS OFF-SITE SHALL BE RESTORED TO A MINIMUM OF THEIR ORIGINAL CONDITION AT THE CONTRACTOR'S EXPENSE.

14. CONTRACTOR SHALL BE SOLELY AND COMPLETELY RESPONSIBLE FOR THE CONDITIONS AT THE JOB SITE, INCLUDING SAFETY OF PERSONS AND PROPERTY DURING PERFORMANCE OF THE WORK.

15. CONSTRUCTION SITES AND STAGING AREAS MUST BE FENCED AND MAINTAINED IN A SECURE CONDITION AT ALL TIMES. KEEP FENCING AND SURROUNDING AREAS CLEAR OF TRASH AND DEBRIS. ANY CONSTRUCTION DEBRIS OR MUD DROPPED INTO MANHOLES, PIPES, OR TRACKED ONTO EXISTING ROADWAYS SHALL BE REMOVED IMMEDIATELY BY CONTRACTOR. CONTRACTOR SHALL REPAIR ANY EXCAVATIONS OR PAVEMENT FAILURES CAUSED BY CONSTRUCTION WITHIN OR IN THE VICINITY OF THE LIMITS OF CONSTRUCTION. THE CONTRACTOR SHALL BE RESPONSIBLE FOR DAMAGE DUE TO CONSTRUCTION AT NO ADDITIONAL COSTS TO OWNER. THE CONTRACTOR SHALL REMOVE ALL SEDIMENT, MUD, AND CONSTRUCTION DEBRIS THAT MAY ACCUMULATE IN THE FLOW LINES, PRIVATE PROPERTY, AND PUBLIC RIGHTS OF WAYS AS A RESULT OF THIS CONSTRUCTION PROJECT. REMOVAL SHALL BE CONDUCTED WITHIN 48 HOURS. RETURN ALL CONSTRUCTION STAGING SITES TO THEIR ORIGINAL CONDITION UPON COMPLETION OF THE CONSTRUCTION PROJECT.

16. WATER SHALL BE USED AS A DUST PALLIATIVE WHERE REQUIRED. COST FOR DUST PALLATIVE SHALL NOT BE MEASURED AND PAID FOR SEPARATELY, BUT SHALL BE CONSIDERED INCIDENTAL TO THE WORK.

17. ALL WORK SHALL BE PROPERLY BACKFILLED PRIOR TO THE END OF THE WORKDAY. NO OPEN HOLES ARE ALLOWED OVERNIGHT.

18. WHERE CONSISTENT WITH SAFETY AND SPACE CONSIDERATIONS, EXCAVATED MATERIAL IS TO BE PLACED ON THE UPHILL SIDE OF TRENCHES.

19. THE CONTRACTOR SHALL BE RESPONSIBLE FOR RECORDING AS-BUILT INFORMATION ON A SET OF RECORD DRAWINGS KEPT ON THE CONSTRUCTION SITE, AND AVAILABLE TO THE CITY INSPECTOR AT ALL TIMES. UPON COMPLETION OF THE WORK, THE CONTRACTOR SHALL SUBMIT RECORD DRAWINGS, IN AN AUTOCAD COMPATIBLE FORMAT, TO THE CITY. THE PRODUCTION OF THESE DOCUMENTS WILL NOT BE PAID FOR SEPARATELY, BUT SHALL BE INCLUDED IN THE COST OF THE WORK.

14. CONTRACTOR SHALL FURNISH ELECTRONIC REPRODUCIBLE AS-BUILT RECORD DRAWINGS IN PDF AND CAD FORMAT SHOWING HORIZONTAL AND VERTICAL LOCATIONS, AND OTHER PERTINENT DATA REGARDING UTILITIES AND RELATED FACILITIES AS CONSTRUCTED. REFERENCE SPECIFICATIONS FOR ADDITIONAL INFORMATION.

20. ALL QUANTITIES ARE BASED ON HORIZONTAL PLAN MEASUREMENTS. CONTRACTOR SHALL MAKE ALLOWANCES FOR SLOPE FACTOR, OVERLAP, TRENCHING, ETC.

21. WORKERS SHALL BE ALERT DURING EXCAVATION FOR VISUAL AND OLFACTORY SIGNS OF CONTAMINATION. IF SOIL CONTAMINATION IS ENCOUNTERED DURING CONSTRUCTION ACTIVITIES, WORK WILL STOP IMMEDIATELY, AND THE PROCEDURES OUTLINED IN THE MATERIALS MANAGEMENT PLAN SHALL BE FOLLOWED. THE CONTRACTOR SHALL BE RESPONSIBLE FOR THE REQUIRED WORKERS' HEALTH AND SAFETY. CONTAMINATED SOILS, IF ANY, SHALL BE PROPERLY MANAGED IN ACCORDANCE WITH LOCAL, STATE AND FEDERAL REGULATIONS.

22. NOTIFY METRO WASTEWATER RECLAMATION DISTRICT (MWRD) 48 HOURS PRIOR TO CONSTRUCTION STARTING ON OR ADJACENT TO ANY MWRD MANHOLES AT 303.286.3229.

23. NOTIFY AND INVITE MWRD TO THE PRECONSTRUCTION MEETING AT 303.286.3229

24. CONTRACTOR SHALL COORDINATE WITH ARTIST FOR PLACEMENT OF FEATURES, AS SHOWN ON DRAWINGS.

wenk ASSOCIATES
PLANNERS & LANDSCAPE ARCHITECTS
303.628.0003

DENVER
THE MILE HIGH CITY

RIVER NORTH PARK
DENVER, COLORADO

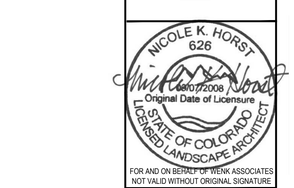

FOR AND ON BEHALF OF WENK ASSOCIATES
NOT VALID WITHOUT ORIGINAL SIGNATURE

KEY PLAN:

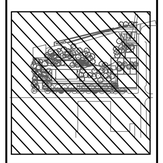

REVISIONS:

NAME	DATE

DRAWN BY: BP/TS

REVIEWED BY: NH

PROJECT NUMBER: 15014

DATE: **OCTOBER 2018**

ISSUE: BID SET

SHEET TITLE: GENERAL NOTES

SHEET NUMBER: CV1.0

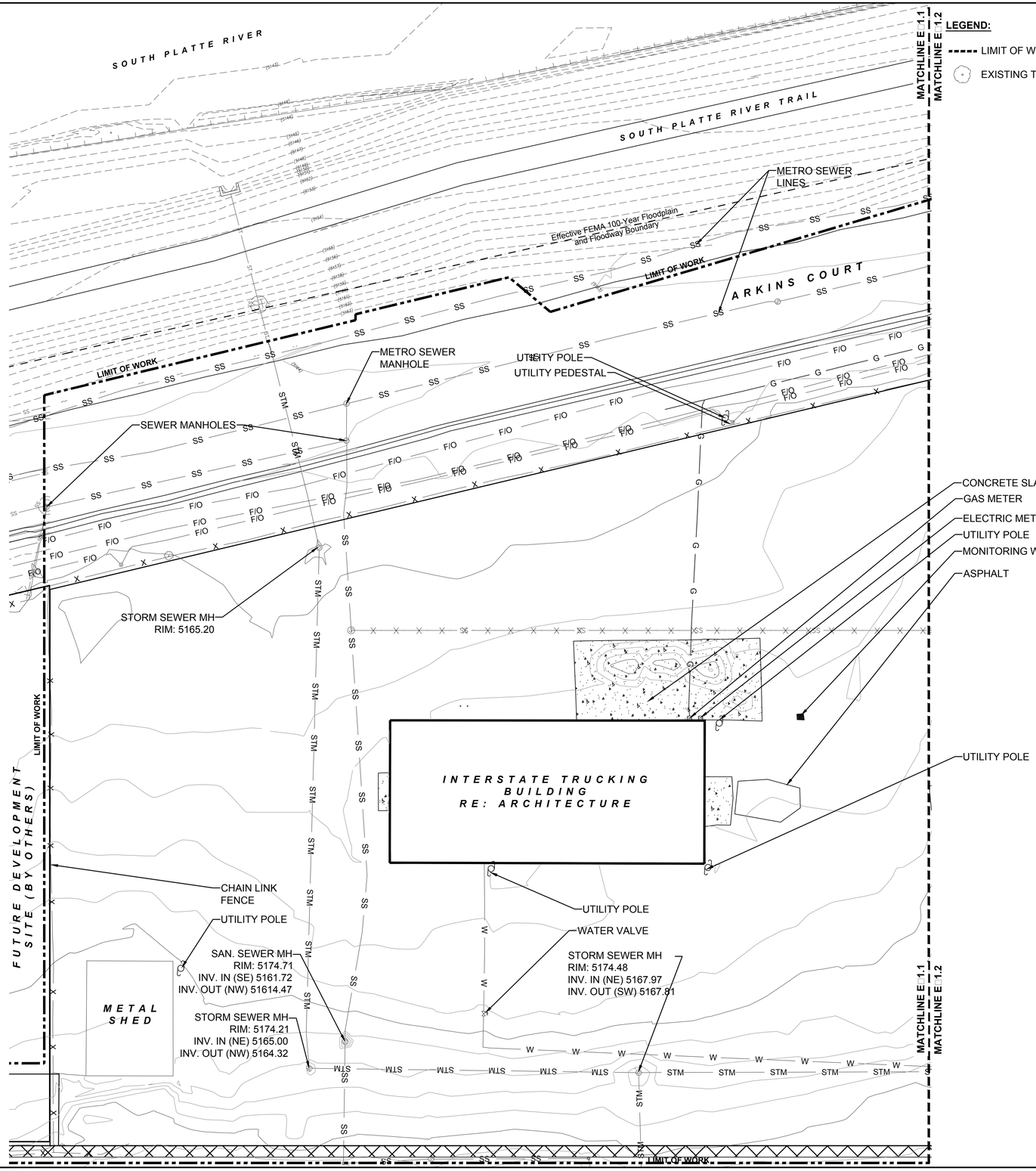

LEGEND:

- LIMIT OF WORK
- EXISTING TREE
- GAS LINE
- WATER LINE
- STORM SEWER
- SANITARY SEWER
- FIBER OPTIC LINE
- ELECTRIC LINE (OVERHEAD)
- CHAIN LINK FENCE
- CONCRETE
- EFFECTIVE FEMA 100-YEAR FLOODPLAIN AND FLOODWAY BOUNDARY

NOTES:

1. FOR INFORMATION ONLY. CONTRACTOR SHALL FIELD VERIFY EXISTING CONDITIONS PRIOR TO BEGINNING CONSTRUCTION.
2. LOCATIONS OF UTILITIES ARE GRAPHIC ONLY AND MAY NOT REPRESENT ACTUAL FIELD CONDITIONS. CONTRACTOR SHALL CALL UTILITY NOTIFICATION CENTER OF COLORADO 1-800-922-1987 TO LOCATE ALL UTILITIES PRIOR TO COMMENCING WORK.
3. SURVEY WAS PROVIDED BY THE CITY & COUNTY OF DENVER, PARKS & RECREATION. CONTRACTOR SHALL COMMUNICATE ANY DISCREPANCIES BETWEEN THE EXISTING CONDITIONS ILLUSTRATED AND FIELD CONDITIONS AT TIME OF CONSTRUCTION WITH THE OWNER IMMEDIATELY UPON THEIR DISCOVERY.

0 10 20 40

wenk
ASSOCIATES
PLANNERS & LANDSCAPE ARCHITECTS
303.628.0003

DENVER
THE MILE HIGH CITY

RIVER NORTH PARK

DENVER, COLORADO

NICOLE K. HORST
626
08/07/2008
Original Date of Licensure
STATE OF COLORADO
LICENSED LANDSCAPE ARCHITECT

FOR AND ON BEHALF OF WENK ASSOCIATES
NOT VALID WITHOUT ORIGINAL SIGNATURE

KEY PLAN:

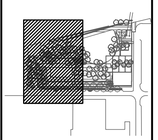

REVISIONS:
NAME DATE

DRAWN BY:
BP/TS

REVIEWED BY:
NH

PROJECT NUMBER:
15014

DATE:
OCTOBER 2018

ISSUE:
BID SET

SHEET TITLE:
EXISTING CONDITIONS

SHEET NUMBER:
EX1.1

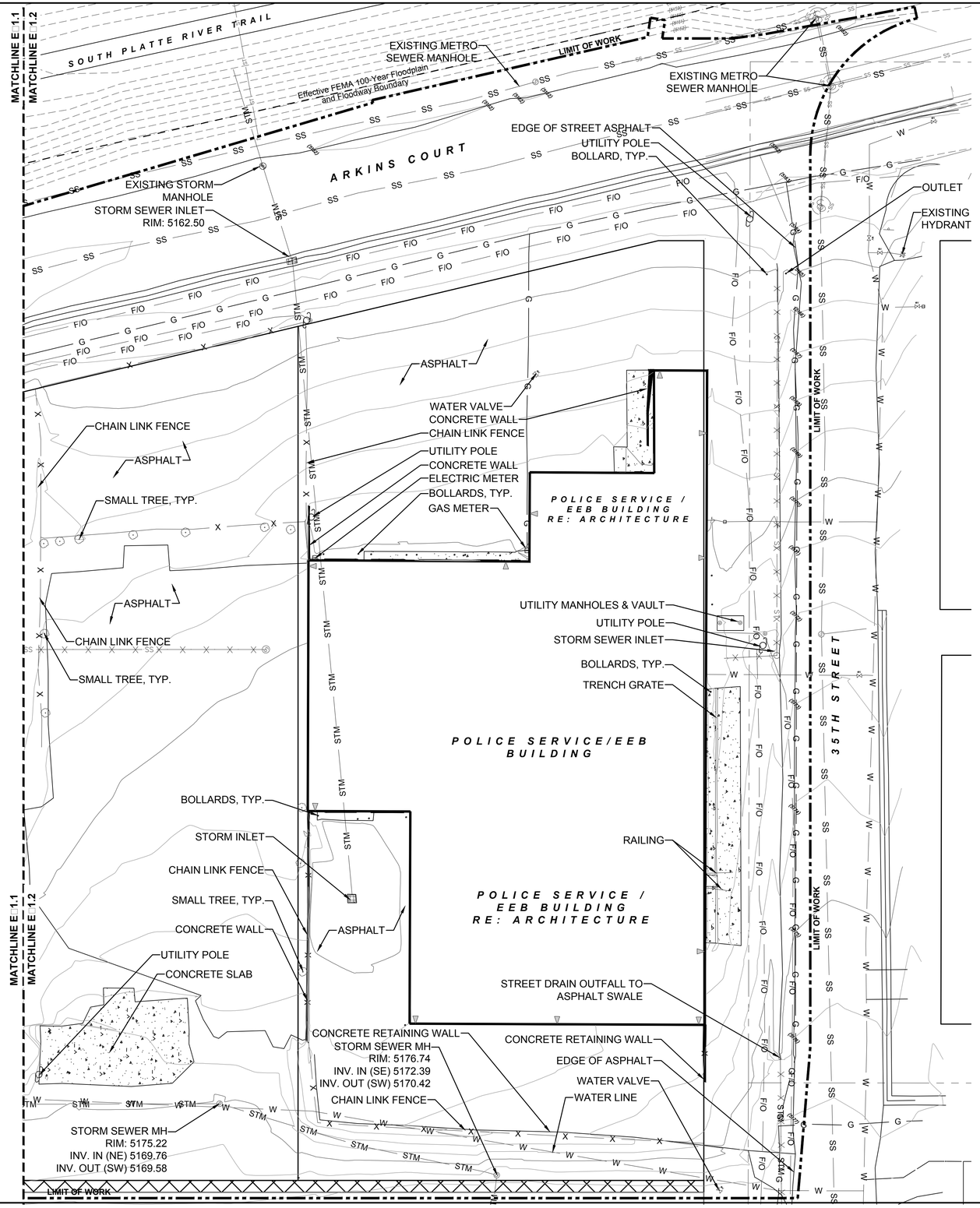

LEGEND:

- LIMIT OF WORK
- EXISTING TREE
- GAS LINE
- WATER LINE
- STORM SEWER
- SANITARY SEWER
- FIBER OPTIC LINE
- ELECTRIC LINE (OVERHEAD)
- CHAIN LINK FENCE
- CONCRETE
- EFFECTIVE FEMA 100-YEAR FLOODPLAIN AND FLOODWAY BOUNDARY

NOTES:

1. FOR INFORMATION ONLY. CONTRACTOR SHALL FIELD VERIFY EXISTING CONDITIONS PRIOR TO BEGINNING CONSTRUCTION.
2. LOCATIONS OF UTILITIES ARE GRAPHIC ONLY AND MAY NOT REPRESENT ACTUAL FIELD CONDITIONS. CONTRACTOR SHALL CALL UTILITY NOTIFICATION CENTER OF COLORADO 1-800-922-1987 TO LOCATE ALL UTILITIES PRIOR TO COMMENCING WORK.
3. SURVEY WAS PROVIDED BY THE CITY & COUNTY OF DENVER, PARKS & RECREATION. CONTRACTOR SHALL COMMUNICATE ANY DISCREPANCIES BETWEEN THE EXISTING CONDITIONS ILLUSTRATED AND FIELD CONDITIONS AT TIME OF CONSTRUCTION WITH THE OWNER IMMEDIATELY UPON THEIR DISCOVERY.

0 10 20 40

Wenk ASSOCIATES
PLANNERS & LANDSCAPE ARCHITECTS
303.628.0003

DENVER
THE MILE HIGH CITY

RIVER NORTH PARK

DENVER, COLORADO

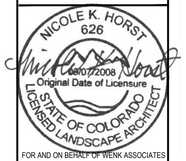

FOR AND ON BEHALF OF WENK ASSOCIATES
NOT VALID WITHOUT ORIGINAL SIGNATURE

KEY PLAN:

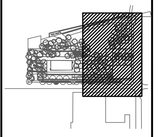

REVISIONS:

NAME	DATE

DRAWN BY: BP/TS

REVIEWED BY: NH

PROJECT NUMBER: 15014

DATE: **OCTOBER 2018**

ISSUE: BID SET

SHEET TITLE: EXISTING CONDTIONS

SHEET NUMBER: EX1.2

© 2017, ALL RIGHTS RESERVED.

2017-EC-0000204

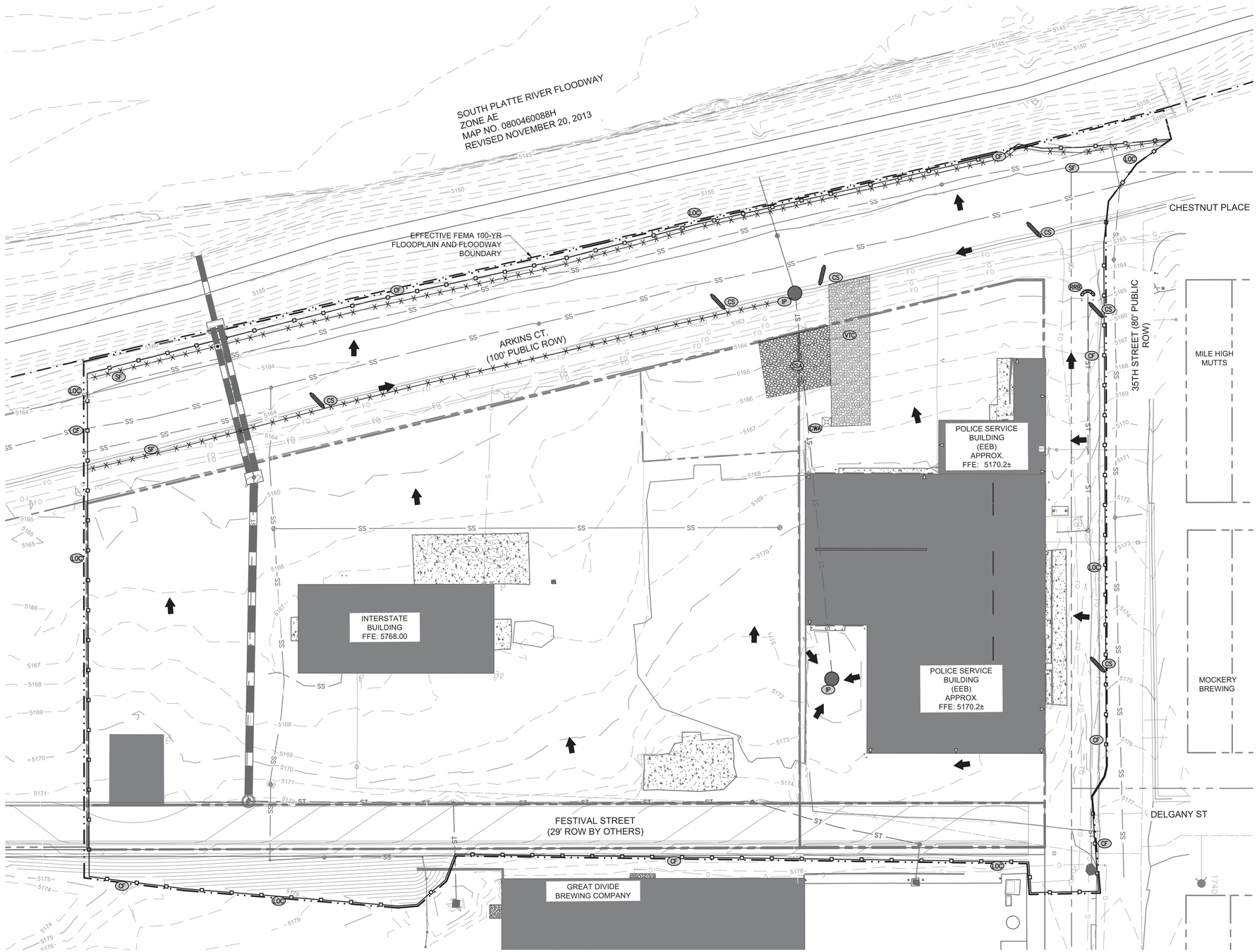



LEGEND

- PROPERTY LINE
- EXISTING CONTOUR
- EXISTING SANITARY SEWER
- EXISTING WATER LINE
- EXISTING GAS LINE
- EXISTING STORM SEWER
- EXISTING OVERHEAD ELECTRIC
- EXISTING SANITARY MANHOLE
- EXISTING STORM MANHOLE
- EXISTING FIRE HYDRANT
- EXISTING LIGHT POLE
- EXISTING GAS METER
- EXISTING ELECTRIC METER
- EXISTING CLEANOUT
- EXISTING STORM INLET
- EXISTING POWER POLE
- EXISTING TELECOM MANHOLE
- LOC — LIMITS OF CONSTRUCTION
- CF — CONSTRUCTION FENCE
- SF — SILT FENCE
- VTC — VEHICLE TRACKING CONTROL
- CWA — CONCRETE WASHOUT AREA
- SSA — STABILIZED STAGING AREA
- IP — INLET PROTECTION
- CS — CURB SOCK
- TS — TEMPORARY SEEDING AND MULCHING
- SM — SEEDING AND MULCHING
- LSA — LANDSCAPED AREA
- RRB — REINFORCED ROCK BERM AT OUTLET PROTECTION
- DRAINAGE FLOW ARROW

BASIS OF BEARINGS

BEARINGS ARE BASED ON THE NORTH LINE OF THE NORTHEAST QUARTER (NE¼) OF SECTION 27, TOWNSHIP 3 SOUTH, RANGE 68 WEST OF THE SIXTH PRINCIPAL MERIDIAN BETWEEN THE FOUND 2.5" CAP (LS 33204) AT THE NORTH QUARTER CORNER (N ¼) OF SAID SECTION 27 TOWNSHIP 3 SOUTH, RANGE 68 WEST OF THE SIXTH PRINCIPAL MERIDIAN AND THE FOUND CUT "+" IN STONE AT THE NORTHEAST QUARTER (NE ¼) OF SAID SECTION 27, TOWNSHIP 3 SOUTH, RANGE 68 WEST OF THE SIXTH PRINCIPAL MERIDIAN , WITH AN ASSUMED BEARING OF N89°57'50"W.

PROJECT BENCHMARK

BENCHMARK IS CITY AND COUNTY OF DENVER BENCHMARK ELLIS, A 1-½" BRASS CAP LOCATED AT THE NORTHWEST CORNER OF ARKINS COURT AND 36TH STREET ON TOP OF FLASTONE OUTFALL INTO PLATTE RIVER (EAST SIDE) WITH A NAVD88 VERTICAL ELEVATION OF 5162.35.

NOTE:

1. PORTABLE TOILETS SHOULD BE SECURED/STAKED ON ALL FOUR SIDES.

811 Know what's below. Call before you dig.

CALL UTILITY NOTIFICATION CENTER OF COLORADO
1-800-922-1987 or 811
CALL 3-BUSINESS DAYS (NOT INCLUDING INITIAL DAY OF CONTACT) IN ADVANCE BEFORE YOU DIG, GRADE, OR EXCAVATE FOR THE MARKING OF UNDERGROUND MEMBER UTILITIES.

EES ENTITLEMENT AND ENGINEERING SOLUTIONS, INC.
501 S Cherry St
Suite 300
Denver, CO 80246
www.ees.us.com
303-572-7997

WENK ASSOCIATES
PLANNERS & LANDSCAPE ARCHITECTS
303.628.0003

DENVER THE MILE HIGH CITY

RIVER NORTH PARK

DENVER, COLORADO

COLORADO LICENSED PROFESSIONAL ENGINEER
JEFFREY L. HARRINGTON
11/19/18
47215
FOR AND ON BEHALF OF EES
NOT VALID WITHOUT ORIGINAL SIGNATURE

KEY PLAN:

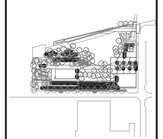

REVISIONS:
NAME DATE

DRAWN BY: JLH

REVIEWED BY: JSP

PROJECT NUMBER: 15014

DATE: **OCTOBER, 2018**

ISSUE: BID SET

SHEET TITLE: EROSION CONTROL PLAN (INITIAL)

SHEET NUMBER: C3.1

8/21/2015 12:21 PM P:\WENK\LARINO PARK\08 CAD\C3.1 EROSION CONTROL PLAN (INITIAL).DWG

© 2017, ALL RIGHTS RESERVED.

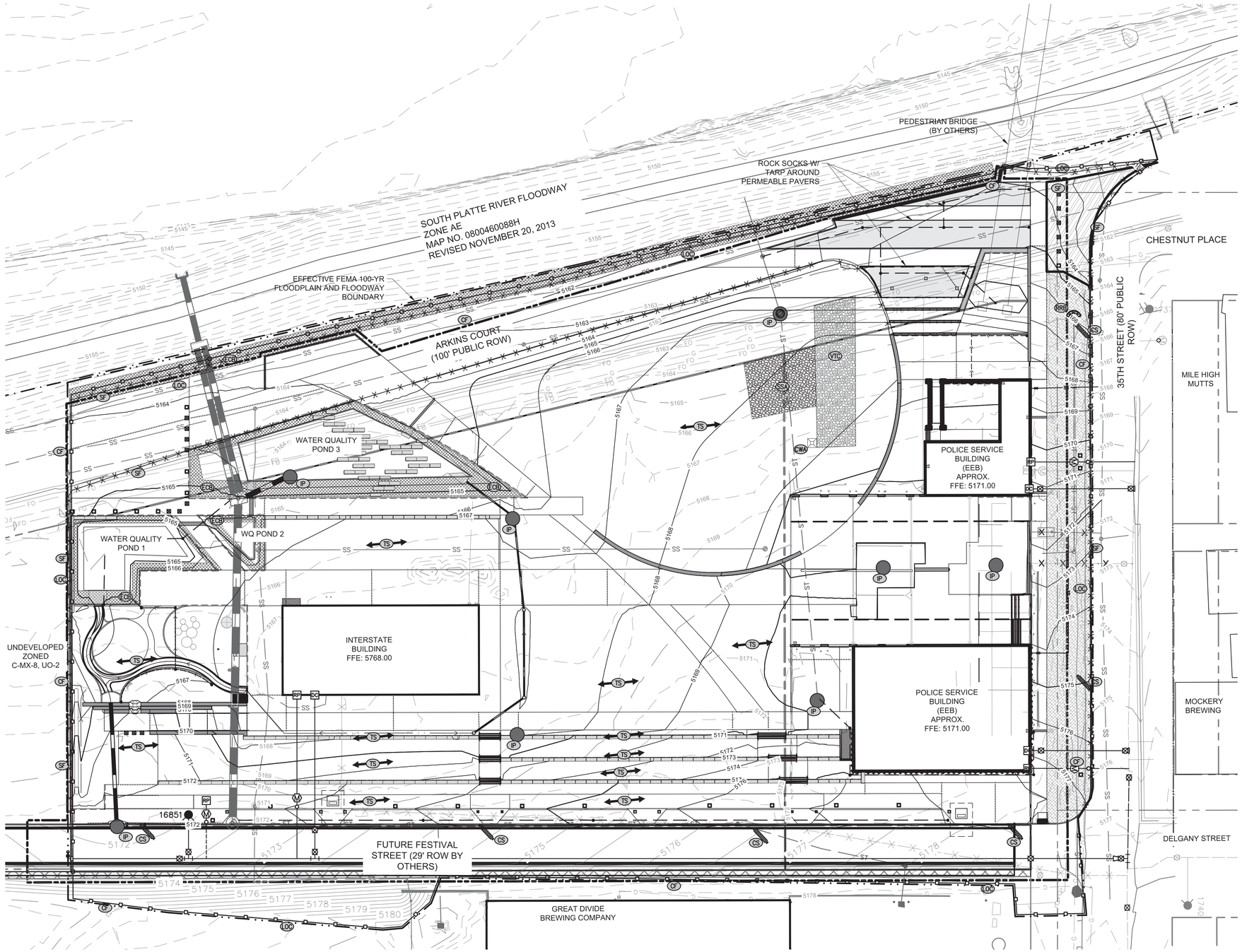

2017-EC-0000204

0 30 60

1 INCH = 30 FT.

LEGEND

- PROPERTY LINE
- 5280 EXISTING CONTOUR
- SS EXISTING SANITARY SEWER
- W EXISTING WATER LINE
- G EXISTING GAS LINE
- ST EXISTING STORM SEWER
- OE EXISTING OVERHEAD ELECTRIC
- EXISTING SANITARY MANHOLE
- EXISTING STORM MANHOLE
- EXISTING FIRE HYDRANT
- EXISTING LIGHT POLE
- EXISTING GAS METER
- EXISTING ELECTRIC METER
- EXISTING CLEANOUT
- EXISTING STORM INLET
- EXISTING POWER POLE
- EXISTING TELECOM MANHOLE
- 5280 PROPOSED CONTOUR
- W PROPOSED WATER LINE
- ST PROPOSED STORM SEWER
- SS PROPOSED SANITARY SEWER
- PROPOSED STORM INLET
- ST PROPOSED STORM MANHOLE
- SS PROPOSED SANITARY MANHOLE
- W PROPOSED WATER METER
- PROPOSED LIGHT POLE
- PROPOSED TREE
- PROPOSED STORM MANHOLE
- PROPOSED STORM PIPE
- PROPOSED STORM INLET
- LOC LIMITS OF CONSTRUCTION
- CF CONSTRUCTION FENCE
- SF SILT FENCE
- VTC VEHICLE TRACKING CONTROL
- CWA CONCRETE WASHOUT AREA
- SSA STABILIZED STAGING AREA
- IP INLET PROTECTION
- CS CURB SOCK
- TS TEMPORARY SEEDING AND MULCHING
- SM SEEDING AND MULCHING
- LSA LANDSCAPED AREA
- ECB EROSION CONTROL BLANKET
- RRB REINFORCED ROCK BERM AT OUTLET PROTECTION

BASIS OF BEARINGS

BEARINGS ARE BASED ON THE NORTH LINE OF THE NORTHEAST QUARTER (NE¼) OF SECTION 27, TOWNSHIP 3 SOUTH, RANGE 68 WEST OF THE SIXTH PRINCIPAL MERIDIAN BETWEEN THE FOUND 2.5" CAP (LS 33204) AT THE NORTH QUARTER CORNER (N ¼) OF SAID SECTION 27 TOWNSHIP 3 SOUTH, RANGE 68 WEST OF THE SIXTH PRINCIPAL MERIDIAN AND THE FOUND CUT "+" IN STONE AT THE NORTHEAST QUARTER (NE ¼) OF SAID SECTION 27, TOWNSHIP 3 SOUTH, RANGE 68 WEST OF THE SIXTH PRINCIPAL MERIDIAN , WITH AN ASSUMED BEARING OF N89°57'50"W.

PROJECT BENCHMARK

BENCHMARK IS CITY AND COUNTY OF DENVER BENCHMARK ELLIS, A 1-½" BRASS CAP LOCATED AT THE NORTHWEST CORNER OF ARKINS COURT AND 36TH STREET ON TOP OF FLASTONE OUTFALL INTO PLATTE RIVER (EAST SIDE) WITH A NAVD88 VERTICAL ELEVATION OF 5162.35.

NOTE:

1. TEMPORARY SEED MIX TO BE PLACED IN AREAS NOT PLANNED FOR HARDSCAPE.
2. PORTABLE TOILETS SHOULD BE SECURED/STAKED ON ALL FOUR SIDES.

811 Know what's below. Call before you dig.

CALL UTILITY NOTIFICATION CENTER OF COLORADO
1-800-922-1987 or 811
CALL 3-BUSINESS DAYS (NOT INCLUDING INITIAL DAY OF CONTACT) IN ADVANCE BEFORE YOU DIG, GRADE, OR EXCAVATE FOR THE MARKING OF UNDERGROUND MEMBER UTILITIES.

EES ENTITLEMENT AND ENGINEERING SOLUTIONS, INC.
501 S Cherry St
Suite 300
Denver, CO 80246
www.ees.us.com
303-572-7997

wenk ASSOCIATES PLANNERS & LANDSCAPE ARCHITECTS 303.628.0003

DENVER THE MILE HIGH CITY

RIVER NORTH PARK

DENVER, COLORADO

COLORADO LICENSED PROFESSIONAL ENGINEER 11/19/18 47215

FOR AND ON BEHALF OF EES
NOT VALID WITHOUT ORIGINAL SIGNATURE

KEY PLAN:

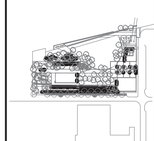

REVISIONS:
NAME DATE

DRAWN BY: JLH

REVIEWED BY: JSP

PROJECT NUMBER: 15014

DATE: **OCTOBER, 2018**

ISSUE: BID SET

SHEET TITLE: EROSION CONTROL PLAN (INTERIM)
SHEET NUMBER: C3.2

8/21/2015 12:21 PM P:\WENK-LARINO PARK\08 CAD\C3.2 EROSION CONTROL PLAN (INTERIM).DWG

© 2017, ALL RIGHTS RESERVED.

2017-EC-0000204

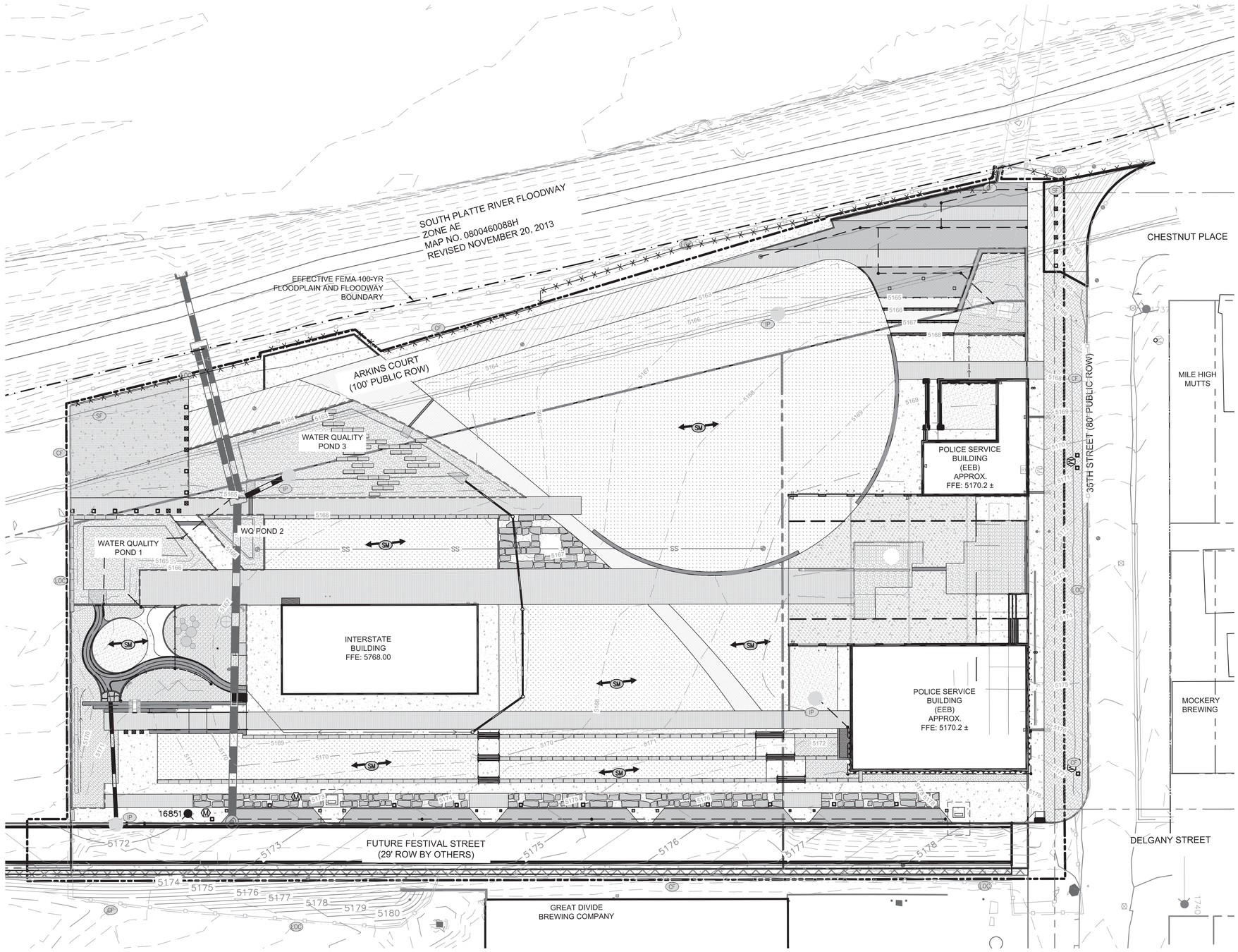

0 30 60

1 INCH = 30 FT.

LEGEND

- PROPERTY LINE
- EXISTING CONTOUR
- EXISTING SANITARY SEWER
- EXISTING WATER LINE
- EXISTING GAS LINE
- EXISTING STORM SEWER
- EXISTING OVERHEAD ELECTRIC
- EXISTING SANITARY MANHOLE
- EXISTING STORM MANHOLE
- EXISTING FIRE HYDRANT
- EXISTING LIGHT POLE
- EXISTING GAS METER
- EXISTING ELECTRIC METER
- EXISTING CLEANOUT
- EXISTING STORM INLET
- EXISTING POWER POLE
- EXISTING TELECOM MANHOLE
- PROPOSED CONTOUR
- PROPOSED WATER LINE
- PROPOSED STORM SEWER
- PROPOSED SANITARY SEWER
- PROPOSED STORM INLET
- PROPOSED STORM MANHOLE
- PROPOSED SANITARY MANHOLE
- PROPOSED WATER METER
- PROPOSED LIGHT POLE
- PROPOSED TREE
- PROPOSED STORM MANHOLE
- PROPOSED STORM PIPE
- PROPOSED STORM INLET
- LIMITS OF CONSTRUCTION
- CONSTRUCTION FENCE
- SILT FENCE
- VEHICLE TRACKING CONTROL
- CONCRETE WASHOUT AREA
- STABILIZED STAGING AREA
- INLET PROTECTION
- CURB SOCK
- TEMPORARY SEEDING AND MULCHING
- SEEDING AND MULCHING
- LANDSCAPED AREA

BASIS OF BEARINGS

BEARINGS ARE BASED ON THE NORTH LINE OF THE NORTHEAST QUARTER (NE¼) OF SECTION 27, TOWNSHIP 3 SOUTH, RANGE 68 WEST OF THE SIXTH PRINCIPAL MERIDIAN BETWEEN THE FOUND 2.5" CAP (LS 33204) AT THE NORTH QUARTER CORNER (N ¼) OF SAID SECTION 27 TOWNSHIP 3 SOUTH, RANGE 68 WEST OF THE SIXTH PRINCIPAL MERIDIAN AND THE FOUND CUT "+" IN STONE AT THE NORTHEAST QUARTER (NE ¼) OF SAID SECTION 27, TOWNSHIP 3 SOUTH, RANGE 68 WEST OF THE SIXTH PRINCIPAL MERIDIAN , WITH AN ASSUMED BEARING OF N89°57'50"W.

PROJECT BENCHMARK

BENCHMARK IS CITY AND COUNTY OF DENVER BENCHMARK ELLIS, A 1-½" BRASS CAP LOCATED AT THE NORTHWEST CORNER OF ARKINS COURT AND 36TH STREET ON TOP OF FLASTONE OUTFALL INTO PLATTE RIVER (EAST SIDE) WITH A NAVD88 VERTICAL ELEVATION OF 5162.35.

811 Know what's below. Call before you dig.

CALL UTILITY NOTIFICATION CENTER OF COLORADO
1-800-922-1987 or 811
CALL 3-BUSINESS DAYS (NOT INCLUDING INITIAL DAY OF CONTACT) IN ADVANCE BEFORE YOU DIG, GRADE, OR EXCAVATE FOR THE MARKING OF UNDERGROUND MEMBER UTILITIES.

EES ENTITLEMENT AND ENGINEERING SOLUTIONS, INC.
501 S Cherry St
Suite 300
Denver, CO 80246
www.ees.us.com
303-572-7997

wenk ASSOCIATES
PLANNERS & LANDSCAPE ARCHITECTS
303.628.0003

DENVER THE MILE HIGH CITY

RIVER NORTH PARK
DENVER, COLORADO

COLORADO LICENSED PROFESSIONAL ENGINEER 11/19/18 47215

FOR AND ON BEHALF OF EES
NOT VALID WITHOUT ORIGINAL SIGNATURE

KEY PLAN:

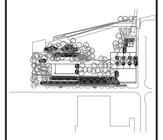

REVISIONS:
NAME DATE

DRAWN BY: JLH

REVIEWED BY: JSP

PROJECT NUMBER: 15014

DATE: **OCTOBER, 2018**

ISSUE: BID SET

SHEET TITLE: EROSION CONTROL PLAN (FINAL)

SHEET NUMBER: C3.3

8/21/2015 12:21 PM P:\WENK LAIRINO PARK\08 CAD\C3.3 EROSION CONTROL PLAN (FINAL).DWG

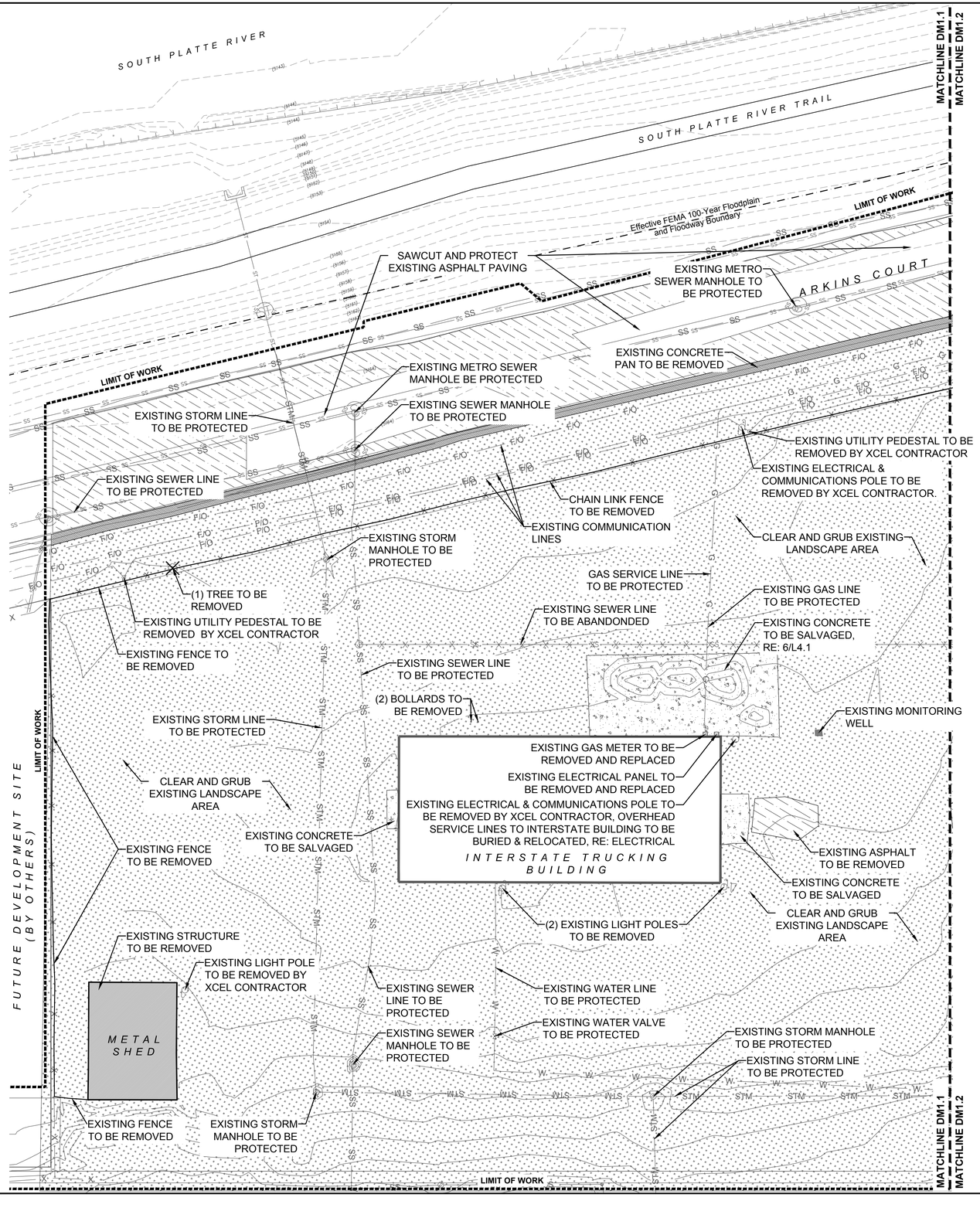

DEMOLITION PLAN LEGEND

- ASPHALT TO BE REMOVED
- CONCRETE TO BE REMOVED-SEE NOTE
- CLEAR AND GRUB
- CONCRETE PAN TO BE REMOVED
- WALLS TO BE REMOVED
- FENCE TO BE REMOVED
- UTILITY POLE TO BE REMOVED-BY XCEL
- UTILITY PEDESTAL TO BE REMOVED-BY XCEL
- TREE TO BE REMOVED
- STRUCTURE TO BE REMOVED
- EFFECTIVE FEMA 100-YEAR FLOODPLAIN AND FLOODWAY BOUNDARY

NOTE: REFERENCE SPECIFICATIONS AND DETAIL 6/L4.1 FOR REMOVAL OF CONCRETE TO BE SALVAGED.

DEMOLITION NOTE

1. ALL ITEMS TO BE REMOVED AND NOT RESET SHALL BECOME THE PROPERTY OF THE CONTRACTOR AND SHALL BE REMOVED FROM THE SITE AND DISPOSED OF PROPERLY.
2. SIGNS AND / OR SIGNAL EQUIPMENT DESIGNATED AS REMOVAL ITEMS SHALL BE CAREFULLY REMOVED AND DELIVERED BY THE CONTRACTOR TO THE CITY YARD AT 5440 ROSLYN STREET, BUILDING E. ANY MATERIAL DESIGNATED FOR SALVAGE THAT IS DAMAGED AFTER REMOVAL SHALL BE REPAIRED OR REPLACED BY THE CONTRACTOR TO THE SATISFACTION OF THE ENGINEER. NO SEPARATE PAYMENT SHALL BE MADE FOR LOADING, HAULING, ULOADING, OR PLACING SALVAGED MATERIALS IN THE CITY YARD.
3. WHERE IT IS REQUIRED TO REMOVE EXISTING CONCRETE OR ASPHALT, CUTTING SHALL BE DONE TO A NEAT WORK LINE TO FULL DEPTH USING A SAW, CUTTING WHEEL, OR OTHER METHOD APPROVED BY THE PROJECT MANAGER. THIS WILL NOT BE PAID SEPARATELY, BUT SHALL BE INCLUDED IN THE WORK.
4. REMOVAL OF EXISTING CURB AND GUTTER, SIDEWALK, DRIVEWAYS, CURB CUTS, AND OTHER CONCRETE ITEMS THAT ARE ATTACHED OR ADJACENT TO OTHER CONCRETE ITEMS SHALL BE REMOVED TO THE NEAREST JOINT, AS NEEDED TO AVOID DAMAGING THE REMAINING CONCRETE ITEMS. THE CONTRACTOR SHALL BE RESPONSIBLE FOR DAMAGE TO ADJACENT SIDEWALK DURING CURB AND GUTTER REMOVAL AND SHALL REPLACE DAMAGED SECTIONS AT NO ADDITIONAL COST TO THE PROJECT.
5. THE CONTRACTOR IS REQUIRED TO RESET, ADJUST, OR REPLACE ANY UTILITIES, LANDSCAPING, SPRINKLER SYSTEMS, SIGNS, SIDEWALKS, ETC. THAT ARE IMPACTED BY CONSTRUCTION AND ARE NOT DESIGNATED TO BE REMOVED.
6. NO FILL OR STRUCTURES ARE ALLOWED IN THE FLOODWAY.
7. MODIFICATION OF ANY MWRD MANHOLE MUST BE IN ACCORDANCE WITH MWRD STANDARD SPECIFICATIONS AND THE STANDARD MANHOLE DETAIL. IF THE FINAL GRADE OF MWRD MANHOLE IS RAISED OF LOWERED FROM ITS CURRENT ELEVATION, IT SHALL CONFORM TO THE 18" MAXIMUM AND 10" MINIMUM DISTANCE FROM THE TOP OF THE CONE TO THE FINAL FINISHED GRADE AS SHOWN ON SAID DETAIL. IF THE REQUIRED FINAL GRADE IS GREATER THAN 18" OR LESS THAN 10" FROM THE EXISTING TOP OF CONE ELEVATION, THE CONE SHALL BE REMOVED, AND BARREL SECTIONS SHALL BE ADDED OR REMOVED TO COMPLY WITH STANDARD DETAIL. SHOULD ADDITIONAL STEPS BE REQUIRED DUE TO THE ADDITION OF BARREL SECTIONS, THEY SHALL BE ADDED AS REQUIRED.
8. GENERAL CONTRACTOR TO COORDINATE WITH XCEL CONTRACTOR FOR SCHEDULING SEQUENCING.

0 10 20 40

wenk
ASSOCIATES
PLANNERS & LANDSCAPE ARCHITECTS
303.628.0003

DENVER
THE MILE HIGH CITY

RIVER NORTH PARK
DENVER, COLORADO

NICOLE K. HORST
626
06/07/2008
Original Date of Licensure
STATE OF COLORADO
LICENSED LANDSCAPE ARCHITECT
FOR AND ON BEHALF OF WENK ASSOCIATES
NOT VALID WITHOUT ORIGINAL SIGNATURE

KEY PLAN:

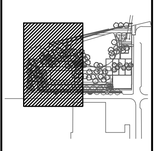

REVISIONS:
NAME DATE

DRAWN BY: BP/TS
REVIEWED BY: NH
PROJECT NUMBER: 15014
DATE: **OCTOBER 2018**
ISSUE: BID SET
SHEET TITLE: DEMOLITION PLAN
SHEET NUMBER: DM1.1

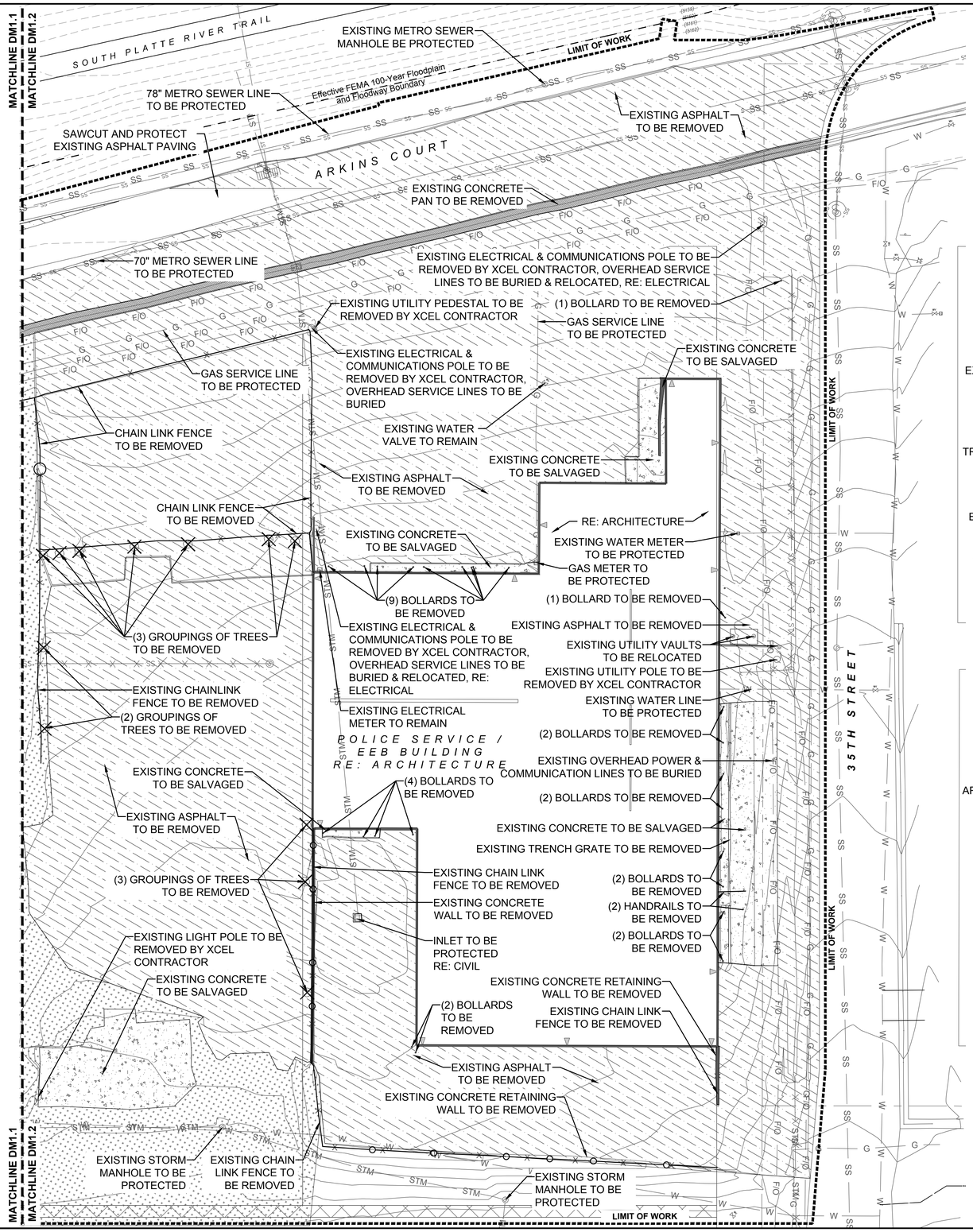

DEMOLITION PLAN

- ASPHALT TO BE REMOVED
- CONCRETE TO BE REMOVED-SEE NOTE
- CLEAR AND GRUB
- CONCRETE PAN TO BE REMOVED
- WALLS TO BE REMOVED
- FENCE TO BE REMOVED
- UTILITY POLE TO BE REMOVED-BY XCEL
- UTILITY PEDESTAL TO BE REMOVED-BY XCEL
- TREE TO BE REMOVED
- STRUCTURE TO BE REMOVED
- EFFECTIVE FEMA 100-YEAR FLOODPLAIN AND FLOODWAY BOUNDARY

NOTE: REFERENCE SPECIFICATIONS AND DETAIL 6/L4.1 FOR REMOVAL OF CONCRETE TO BE SALVAGED.

MAKER'S PLACE DOOR ENLARGEMENT

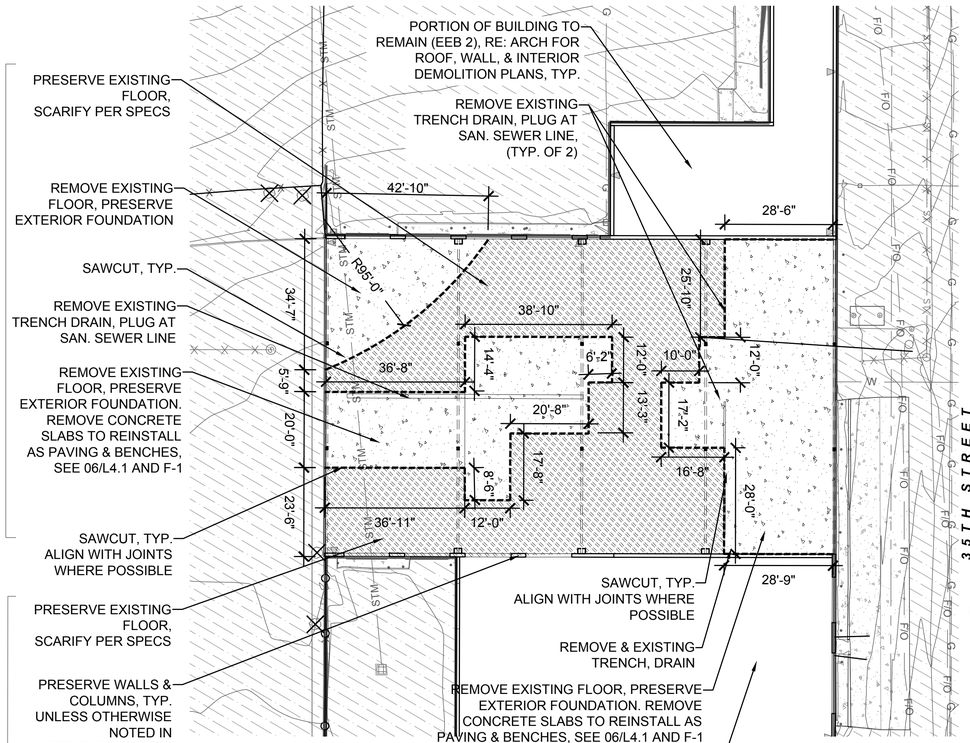

DEMOLITION NOTE

1. ALL ITEMS TO BE REMOVED AND NOT RESET SHALL BECOME THE PROPERTY OF THE CONTRACTOR AND SHALL BE REMOVED FROM THE SITE AND DISPOSED OF PROPERLY.
2. SIGNS AND / OR SIGNAL EQUIPMENT DESIGNATED AS REMOVAL ITEMS SHALL BE CAREFULLY REMOVED AND DELIVERED BY THE CONTRACTOR TO THE CITY YARD AT 5440 ROSLYN STREET, BUILDING E. ANY MATERIAL DESIGNATED FOR SALVAGE THAT IS DAMAGED AFTER REMOVAL SHALL BE REPAIRED OR REPLACED BY THE CONTRACTOR TO THE SATISFACTION OF THE ENGINEER. NO SEPARATE PAYMENT SHALL BE MADE FOR LOADING, HAULING, ULOADING, OR PLACING SALVAGED MATERIALS IN THE CITY YARD.
3. WHERE IT IS REQUIRED TO REMOVE EXISTING CONCRETE OR ASPHALT, CUTTING SHALL BE DONE TO A NEAT WORK LINE TO FULL DEPTH USING A SAW, CUTTING WHEEL, OR OTHER METHOD APPROVED BY THE PROJECT MANAGER. THIS WILL NOT BE PAID SEPARATELY, BUT SHALL BE INCLUDED IN THE WORK.
4. REMOVAL OF EXISTING CURB AND GUTTER, SIDEWALK, DRIVEWAYS, CURB CUTS, AND OTHER CONCRETE ITEMS THAT ARE ATTACHED OR ADJACENT TO OTHER CONCRETE ITEMS SHALL BE REMOVED TO THE NEAREST JOINT, AS NEEDED TO AVOID DAMAGING THE REMAINING CONCRETE ITEMS. THE CONTRACTOR SHALL BE RESPONSIBLE FOR DAMAGE TO ADJACENT SIDEWALK DURING CURB AND GUTTER REMOVAL AND SHALL REPLACE DAMAGED SECTIONS AT NO ADDITIONAL COST TO THE PROJECT.
5. THE CONTRACTOR IS REQUIRED TO RESET, ADJUST, OR REPLACE ANY UTILITIES, LANDSCAPING, SPRINKLER SYSTEMS, SIGNS, SIDEWALKS, ETC. THAT ARE IMPACTED BY CONSTRUCTION AND ARE NOT DESIGNATED TO BE REMOVED.
6. NO FILL OR STRUCTURES ARE ALLOWED IN THE FLOODWAY.
7. MODIFICATION OF ANY MWRD MANHOLE MUST BE IN ACCORDANCE WITH MWRD STANDARD SPECIFICATIONS AND THE STANDARD MANHOLE DETAIL. IF THE FINAL GRADE OF MWRD MANHOLE IS RAISED OF LOWERED FROM ITS CURRENT ELEVATION, IT SHALL CONFORM TO THE 18" MAXIMUM AND 10" MINIMUM DISTANCE FROM THE TOP OF THE CONE TO THE FINAL FINISHED GRADE AS SHOWN ON SAID DETAIL. IF THE REQUIRED FINAL GRADE IS GREATER THAN 18" OR LESS THAN 10" FROM THE EXISTING TOP OF CONE ELEVATION, THE CONE SHALL BE REMOVED, AND BARREL SECTIONS SHALL BE ADDED OR REMOVED TO COMPLY WITH STANDARD DETAIL. SHOULD ADDITIONAL STEPS BE REQUIRED DUE TO THE ADDITION OF BARREL SECTIONS, THEY SHALL BE ADDED AS REQUIRED.
8. GENERAL CONTRACTOR TO COORDINATE WITH XCEL CONTRACTOR FOR SCHEDULING SEQUENCING.

0 10 20 40

wenk
ASSOCIATES
PLANNERS & LANDSCAPE ARCHITECTS
303.628.0003

DENVER
THE MILE HIGH CITY

RIVER NORTH PARK
DENVER, COLORADO

NICOLE K. HORST
626
10/07/2008
Original Date of Licensure
STATE OF COLORADO
LICENSED LANDSCAPE ARCHITECT
FOR AND ON BEHALF OF WENK ASSOCIATES
NOT VALID WITHOUT ORIGINAL SIGNATURE

KEY PLAN:

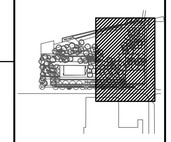

REVISIONS:

NAME	DATE

DRAWN BY: BP/TS

REVIEWED BY: NH

PROJECT NUMBER: 15014

DATE: **OCTOBER 2018**

ISSUE: BID SET

SHEET TITLE: DEMOLITION PLAN

SHEET NUMBER: DM1.2

© 2017, ALL RIGHTS RESERVED.

CITY AND COUNTY OF DENVER CONSTRUCTION ACTIVITIES STORMWATER MANUAL STANDARD NOTES:

1. THE PERMITTEE AND/OR CONTRACTOR SHALL REMOVE ALL SEDIMENT, MUD, CONSTRUCTION DEBRIS, OR OTHER POTENTIAL POLLUTANTS THAT MAY HAVE BEEN DISCHARGED TO OR, ACCUMULATE IN, THE FLOW LINES, STORM DRAINAGE APPURTENANCES, AND PUBLIC RIGHTS OF WAYS OF THE CITY AND COUNTY OF DENVER AS A RESULT OF CONSTRUCTION ACTIVITIES ASSOCIATED WITH THIS SITE DEVELOPMENT OR CONSTRUCTION PROJECT. SAID REMOVAL SHALL BE CONDUCTED IN A TIMELY MANNER.

2. THE CONTRACTOR SHALL PREVENT SEDIMENT, DEBRIS AND ALL OTHER POLLUTANTS FROM ENTERING THE STORM SEWER SYSTEM DURING ALL DEMOLITION, EXCAVATION, TRENCHING, BORING, GRADING, OR OTHER CONSTRUCTION OPERATIONS THAT ARE PART OF THIS PROJECT. THE CONTRACTOR SHALL BE HELD RESPONSIBLE FOR REMEDIATION OF ANY ADVERSE IMPACTS TO THE MUNICIPAL SEPARATE STORM SEWER SYSTEM, RECEIVING WATERS, WATERWAYS, WETLANDS, AND OR OTHER PUBLIC OR PRIVATE PROPERTIES, RESULTING FROM WORK DONE AS PART OF THIS PROJECT.

3. SOIL STABILIZATION MEASURES SHALL BE IMPLEMENTED WITHIN FOURTEEN (14) DAYS FOLLOWING COMPLETION OF GRADING ACTIVITIES. STABILIZATION OF DISTURBED AREAS ADJACENT TO RECEIVING WATERS OR WITH SLOPES 3 TO 1 OR GREATER SHALL BE COMPLETED WITHIN SEVEN (7) DAYS FOLLOWING COMPLETION OF GRADING ACTIVITIES. NOTE: FEDERAL AND STATE REGULATIONS MAY SOON REQUIRE STABILIZATION WITHIN SEVEN (7) DAYS OF COMPLETION OF GRADING ACTIVITIES. IN SUCH CASES, THE SHORTER TIMEFRAME SHALL APPLY TO PROJECTS WITHIN DENVER AS WELL.

4. THE DEVELOPER, GENERAL CONTRACTOR, GRADING CONTRACTOR AND/OR THEIR AUTHORIZED AGENTS SHALL INSURE THAT ALL LOADS OF CUT AND FILL MATERIAL IMPORTED TO OR EXPORTED FROM THIS SITE SHALL BE PROPERLY COVERED TO PREVENT LOSS OF THE MATERIAL DURING TRANSPORT ON PUBLIC RIGHTS OF WAY. (SEC.49-552; REVISED MUNICIPAL CODE)

5. THE USE OF REBAR TO ANCHOR BEST MANAGEMENT PRACTICES IS PROHIBITED. STEEL FENCE POSTS MAY BE USED ON A CASE BY CASE BASIS AND REQUIRES APPROVAL FROM THE CITY AND COUNTY OF DENVER SWMP REVIEWER OR THE STORMWATER ENFORCEMENT INVESTIGATOR PRIOR TO INSTALLATION.

6. SOILS THAT WILL BE STOCKPILED FOR MORE THAN THIRTY (30) DAYS SHALL BE PROTECTED FROM WIND AND WATER EROSION WITHIN FOURTEEN (14) DAYS OF STOCKPILE CONSTRUCTION. STABILIZATION OF STOCKPILES LOCATED WITHIN 100 FEET OF RECEIVING WATERS, OR WITH SLOPES 3 TO 1 OR GREATER SHALL BE COMPLETED WITHIN SEVEN (7) DAYS FOLLOWING STOCKPILE CONSTRUCTION. STABILIZATION AND PROTECTION OF THE STOCKPILE MAY BE ACCOMPLISHED BY ANY OF THE FOLLOWING: MULCHING, TEMPORARY/PERMANENT REVEGETATION OPERATIONS, CHEMICAL SOIL STABILIZER APPLICATION (REQUIRES DENVER PUBLIC WORKS APPROVAL), OR EROSION CONTROL MATTING/GEOTEXTILES. IF STOCKPILES ARE LOCATED WITHIN 100 FEET OF RECEIVING WATERS, A DRAINAGEWAY, OR THE SITE PERIMETER, ADDITIONAL SEDIMENT CONTROLS SHALL BE REQUIRED.

7. APPROVED EROSION AND SEDIMENT CONTROL 'BEST MANAGEMENT PRACTICES' SHALL BE MAINTAINED AND KEPT IN GOOD REPAIR FOR THE DURATION OF THIS PROJECT. AT A MINIMUM, THE PERMITTEE OR CONTRACTOR SHALL PRODUCE AND RETAIN WEEKLY WRITTEN INSPECTION RECORDS FOR ALL BMPS AND AFTER SIGNIFICANT PRECIPITATION EVENTS. ALL NECESSARY MAINTENANCE AND REPAIR SHALL BE COMPLETED IMMEDIATELY. ADDITIONALLY, STREET SWEEPING IS TO BE COMPLETED BY THE CLOSE OF THE BUSINESS DAY OR (AND) ON AN AS NEEDED BASIS THROUGHOUT THE DAY.

8. WATER USED IN THE CLEANING OF CEMENT TRUCK DELIVERY CHUTES SHALL BE DISCHARGED INTO A PREDEFINED, CONCRETE WASHOUT AREA ON THE JOB SITE. BERMED CONTAINMENT OR COMMERCIALLY AVAILABLE CONCRETE WASHOUT DEVICES THAT FULLY CONTAIN ALL WASH WATER ARE ACCEPTABLE. WASH WATER DISCHARGED INTO THE CONTAINMENT AREA OR DEVICE SHALL BE ALLOWED TO INFILTRATE, EVAPORATE, AND/OR BE DISPOSED OF IN ACCORDANCE WITH ALL APPLICABLE REGULATIONS. DRIED CEMENT WASTE IS TO BE REMOVED FROM THE CONTAINMENT AREA AND PROPERLY DISPOSED. SHOULD THE USE OF A PREDEFINED BERMED CONTAINMENT AREA OR APPROVED WASHOUT DEVICE BE TECHNICALLY INFEASIBLE DUE TO THE PROJECT SIZE, OR LACK OF AN AREA WITH A SUITABLE GROUND SURFACE FOR ESTABLISHING CONTAINMENT, PROPER DISPOSAL OF CONCRETE WASHOUT AND WASH WATER AT THE JOB SITE SHALL CONFORM TO THE APPROVED TECHNIQUES AND PRACTICES IDENTIFIED IN THE COLORADO DEPARTMENT OF PUBLIC HEALTH & ENVIRONMENT'S TRAINING VIDEO ENTITLED 'BUILDING FOR A CLEANER ENVIRONMENT, READY MIX WASHOUT TRAINING' AND ITS ACCOMPANYING MANUAL ENTITLED, 'READY MIX WASHOUT GUIDEBOOK, VEHICLE AND EQUIPMENT WASHOUT AT CONSTRUCTION SITES'. THE DIRECT OR INDIRECT DISCHARGE OF WATER CONTAINING WASTE CEMENT TO THE STORM SEWER SYSTEM IS PROHIBITED. (SEC.56- 102A, C; REVISED MUNICIPAL CODE, CITY AND COUNTY OF DENVER).

9. THE CONTRACTOR SHALL PROTECT ALL STORM SEWER FACILITIES ADJACENT TO ANY LOCATION WHERE PAVEMENT CUTTING OPERATIONS INVOLVING WHEEL CUTTING, SAW CUTTING, OR ABRASIVE WATER JET CUTTING ARE TO TAKE PLACE. THE CONTRACTOR SHALL REMOVE AND PROPERLY DISPOSE OF ALL WASTE PRODUCTS GENERATED BY SAID CUTTING OPERATIONS ON A DAILY BASIS OR AS NEEDED THROUGHOUT THE WORK DAY. THE DISCHARGE OF ANY WATER CONTAMINATED BY WASTE PRODUCTS FROM CUTTING OPERATIONS TO THE STORM SEWER SYSTEM IS PROHIBITED. (SEC.56-102A, C; REVISED MUNICIPAL CODE, CITY AND COUNTY OF DENVER).

10. PAVED AND IMPERVIOUS SURFACES WHICH ARE ADJACENT TO CONSTRUCTION SITES MUST BE SWEPT ON A DAILY BASIS AND AS NEEDED DURING THE DAY WHEN SEDIMENT AND OTHER MATERIALS ARE TRACKED OR DISCHARGED ONTO THEM. EITHER SWEEPING BY HAND OR USE OF STREET SWEEPERS IS ACCEPTABLE. STREET SWEEPERS USING WATER WHILE SWEEPING IS PREFERRED IN ORDER TO MINIMIZE DUST. FLUSHING OFF PAVED SURFACES WITH WATER IS PROHIBITED. (SEC.56-102A, C; REVISED MUNICIPAL CODE, CITY AND COUNTY OF DENVER)

BMP MAINTENANCE NOTE:

1. ALL EROSION AND SEDIMENT CONTROL PRACTICES AND OTHER PROTECTIVE MEASURES IDENTIFIED IN THE SWMP MUST BE MAINTAINED IN EFFECTIVE OPERATING CONDITION. PROPER SELECTION AND INSTALLATION OF BMPS AND IMPLEMENTATION OF COMPREHENSIVE INSPECTION AND MAINTENANCE PROCEDURES, IN ACCORDANCE WITH THE SWMP, SHOULD BE ADEQUATE TO MEET THIS CONDITION. BMPS THAT ARE NOT ADEQUATELY MAINTAINED IN ACCORDANCE WITH GOOD ENGINEERING, HYDROLOGIC AND POLLUTION CONTROL PRACTICES, INCLUDING REMOVAL OF COLLECTED SEDIMENT OUTSIDE THE ACCEPTABLE TOLERANCES OF THE BMPS, ARE CONSIDERED TO BE NO LONGER OPERATING EFFECTIVELY AND MUST BE ADDRESSED.

EES GENERAL NOTES:

1. SURVEY INFORMATION PROVIDED BY EV STUDIO. EES MAKES NO WARRANTY TO THE ACCURACY OF THIS INFORMATION. VERIFY ALL CONDITIONS AND DIMENSIONS ON SITE PRIOR TO CONSTRUCTION. IF THERE IS A DISCREPANCY BETWEEN WHAT IS SHOWN ON THE PLANS AND WHAT IS FOUND IN THE FIELD, NOTIFY THE ENGINEER IMMEDIATELY.

2. IT SHALL BE THE CONTRACTOR'S RESPONSIBILITY TO VERIFY THE ACTUAL LOCATION AND ELEVATION OF EXISTING UTILITIES WHICH MAY BE IN CONFLICT WITH THE PROPOSED CONSTRUCTION. IF A CONFLICT DOES EXIST, THE CONTRACTOR SHALL STOP WORK AND NOTIFY THE ENGINEER.

3. ALL UTILITY LOCATIONS SHOWN ARE BASED ON MAPS PROVIDED BY THE APPROPRIATE UTILITY COMPANY AND FIELD SURFACE EVIDENCE AT THE TIME OF SURVEY AND ARE TO BE CONSIDERED APPROXIMATE ONLY. IT IS THE CONTRACTOR'S RESPONSIBILITY TO FIELD VERIFY THE FIELD LOCATION OF ALL UTILITIES, PUBLIC OR PRIVATE, WHETHER SHOWN ON THE PLANS OR NOT, PRIOR TO CONSTRUCTION. REPORT ANY DISCREPANCIES TO THE ENGINEER PRIOR TO CONSTRUCTION.

4. WHERE A PROPOSED UTILITY CROSSES AN EXISTING UTILITY, IT IS THE CONTRACTOR'S RESPONSIBILITY TO FIELD VERIFY THE HORIZONTAL AND VERTICAL LOCATION OF SUCH EXISTING UTILITY, EITHER THROUGH POTHOLING OR AN ALTERNATIVE METHOD. REPORT INFORMATION TO THE ENGINEER PRIOR TO CONSTRUCTION.

5. THE CONTRACTOR SHALL NOTIFY THE CONSTRUCTION MANAGER IMMEDIATELY SHOULD ANY CONFLICT EXIST BETWEEN THE PLANS AND WHAT IS FOUND IN THE FIELD.

6. GENERAL CONTRACTOR TO COORDINATE ALL UTILITY WORK WITH THE APPROPRIATE UTILITY PROVIDER. GENERAL CONTRACTOR TO VERIFY AND FOLLOW ALL UTILITY PROVIDER REQUIREMENTS, PROCEDURES, STANDARDS, AND SPECIFICATIONS.

7. TOW AND BOW GRADES REPRESENT GRADE AT TOP OF WALL AND GRADE AT BOTTO0M OF WALL AND ARE NOT TO BE USED FOR CONSTRUCTION OF THE WALL.

8. REFERENCE STRUCTURAL PLANS FOR ALL WALL RELATED CONSTRUCTION. CIVIL PLANS ARE NOT RESPONSIBLE FOR WALL DESIGN OR WALL CONSTRUCTION.

9. REFERENCE GEOTECHNICAL ENGINEERING REPORT FOR PAVEMENT DESIGN, SOIL CONDITIONING, AND CONSTRUCTION.

10. REFERENCE ARCHITECTURAL PLANS FOR BUILDING DIMENSIONS.

CITY AND COUNTY OF DENVER PUBLIC WORKS STORM AND SANITARY STANDARD NOTES:

1. NO WORK IS AUTHORIZED WITHOUT A PRE-CONSTRUCTION MEETING AT WHICH YOU WILL RECEIVE A COPY OF THE CITY AND COUNTY OF DENVER STAMPED AND APPROVED SET OF PLANS. PLEASE CALL 303-446-3722 TO SCHEDULE A RECONSTRUCTION MEETING AFTER YOUR PLANS HAVE BEEN APPROVED.

2. PUBLIC WORKS, WASTEWATER MANAGEMENT DIVISION'S STANDARD DETAILS AND TECHNICAL SPECIFICATIONS FOR SANITARY & STORM SEWERS APPLY TO THIS WORK. PUBLIC WORKS, WASTEWATER MANAGEMENT DIVISION'S STANDARD DETAILS (DRAWINGS), MOST RECENT EDITION, SHALL BE USED AS A MINIMUM. THE TECHNICAL SPECIFICATIONS ARE AVAILABLE FROM DS – SITE ENGINEERING. BOTH SETS MUST BE IN POSSESSION OF THE CONTRACTOR AT THE PRE-CONSTRUCTION CONFERENCE AND MUST REMAIN ON THE JOB SITE AT ALL TIMES DURING CONSTRUCTION.

3. THE STANDARD DETAILS CAN BE VIEWED AT: WASTEWATER MANAGEMENT DIVISION STANDARD DETAILS 2015.

4. CONTRACTOR SHALL CONFORM TO ALL FEDERAL, STATE AND LOCAL HEALTH AND SAFETY RULES AND REGULATIONS.

5. ONE SET OF THE APPROVED SEWER CONSTRUCTION DRAWINGS MUST BE ON-SITE AT ALL TIMES OF CONSTRUCTION.

6. ALL SEWER PIPES SHALL BE INSTALLED WITH CLASS B BEDDING AS A MINIMUM.

7. ANY MODIFICATIONS, ADJUSTMENTS, CONSTRUCTION OR RECONSTRUCTION OF PUBLIC WORKS, WASTEWATER DIVISION FACILITIES MUST BE INSPECTED BY A PW CONSTRUCTION ENGINEERING INSPECTOR. PLEASE SCHEDULE AN APPOINTMENT AT 303-446-3722 A MINIMUM OF 48 HOURS IN ADVANCE OF THE WORK TO SCHEDULE AN INSPECTOR.

8. PIPE MATERIAL, FITTINGS, TRENCHING, BEDDING, CONNECTIONS, AND SEWER INSTALLATION MUST BE INSPECTED BY A PW CONSTRUCTION ENGINEERING INSPECTOR PRIOR TO ANY TRENCH BACKFILL. PLEASE SCHEDULE AN APPOINTMENT AT 303-446-3722 A MINIMUM OF 48 HOURS IN ADVANCE OF THE WORK TO SCHEDULE AN INSPECTOR. MONITORING OF THE PROJECT BY PW SHALL BE FOR THE PURPOSE OF ASSURING GENERAL COMPLIANCE WITH THE APPROVED PLANS, STANDARDS, DETAILS, AND SPECIFICATIONS AS WELL AS THE RULES & REGULATIONS. STORM AND SANITARY INSPECTIONS SHALL NOT TAKE THE PLACE OF CONSTRUCTION INSPECTION AND MATERIALS TESTING, WHICH IS THE OWNER'S RESPONSIBILITY.

9. SANITARY SEWER PIPES SHALL BE PVC AND CONFORM TO: ASTM D3034 SDR 35 FOR SIZES 8 INCHES TO 15 INCHES IN DIAMETER (SOLID WALL), ASTM F789 FOR 18 INCHES (SOLID WALL), ASTM F679 FOR SIZES 18 TO 36 INCHES (SOLID WALL), ASTM F949 FOR SIZES 8 TO 36 INCHES (PVC PROFILE WALL), ASTM F794 FOR SIZES 8 TO 48 INCHES (PROFILE WALL), OR ASTM F1803 FOR SIZES 18 TO 60 INCHES (CLOSED PROFILE GRAVITY PIPE).

10. ANY QUESTIONS REGARDING STORM OR SANITARY FACILITIES THAT ARISE DURING CONSTRUCTION SHOULD BE BROUGHT TO THE ATTENTION OF PW CONSTRUCTION ENGINEERING AT (303) 446-3722.

11. BACKFILL IN PUBLIC RIGHT OF WAY MUST MEET THE REQUIREMENTS OF DENVER PUBLIC WORKS DEPARTMENT. A STREET CUT PERMIT AND INSPECTION OF A BACKFILL AND PAVEMENT REPAIR BY PUBLIC WORKS IS REQUIRED FOR ALL WORK IN THE PUBLIC RIGHT OF WAY. THE CONTRACTOR AND/OR DEVELOPER IS ADVISED TO CONTACT CONSTRUCTION ENGINEERING ROW INSPECTION AT 303-446-3469 OR PWPO AT 303-446-3759 TO OBTAIN INFORMATION REGARDING FEES AND PROCEDURES FOR OBTAINING REQUIRED PERMIT(S). CONTRACTOR MUST OBTAIN A STREET CUT PERMIT AND NOTIFY THE DISTRICT INSPECTOR AT (303) 446-3469, 48-HOURS PRIOR TO START OF JOB. COMPACTION TESTING IS REQUIRED.

12. THE CONTRACTOR PERFORMING WORK ON ANY PUBLIC OR PRIVATE STORM SEWER FACILITY OR APPURTENANCE MUST BE PROPERLY TRADE LICENSED AS A COMPANY AND HAVE A LICENSED PLUMBER, DRAIN LAYER SUPERVISOR OR SEWER CONTRACTOR ON SITE DURING THE WORK.

13. ACCESS MUST BE MAINTAINED FOR ALL SEWER MANHOLES DURING CONSTRUCTION. ANY DESIGN CHANGES TO NEW OR EXISTING PUBLIC STORM OR SANITARY SEWER MUST INCLUDE PERMANENT ACCESS TO THE PUBLIC STORM AND SANITARY SEWER MANHOLES AND COULD REQUIRE ROLL-OVER CURB, COMMERCIAL DRIVE, REINFORCED CONCRETE SIDEWALK, RITTER RINGS OR CONCRETE PAD. MINIMUM ACCESS TO EACH MANHOLE IS A 20' WIDE LANE FROM THE NEAREST PUBLIC RIGHT OF WAY, CENTERED AT THE MANHOLE INCLUDING A 10' RADIUS AROUND THE MANHOLE AND 22.0' VERTICAL CLEARANCE.

14. THE CONNECTION OF A NEW SANITARY/STORM SEWER TO AN EXISTING MANHOLE MAY REQUIRE MANHOLE RECONSTRUCTION AT THE DISCRETION OF THE PW CONSTRUCTION ENGINEERING INSPECTOR OR THE PW CONSTRUCTION ENGINEERING ENGINEER.

15. CHANGES IN THE ELEVATION OF AN EXISTING BRICK MANHOLE MAY REQUIRE THE USE OF A PRE-CAST CONCRETE MANHOLE OR MANHOLE RECONSTRUCTION AT THE DISCRETION OF THE PW CONSTRUCTION ENGINEERING INSPECTOR AND/OR PW CONSTRUCTION ENGINEERING ENGINEER.

16. CHANGES IN ELEVATION OR MODIFICATION TO EXISTING INLETS MAY REQUIRE RECONSTRUCTION AT THE DISCRETION OF THE PW CONSTRUCTION ENGINEERING INSPECTOR OR ENGINEER.

17. THE CONTRACTOR SHALL BE AWARE THAT WHEN DEBRIS IS DROPPED INTO PUBLIC MANHOLES AND OTHER PUBLIC STRUCTURES, THE CONTRACTOR IS TO IMMEDIATELY REMOVE THIS TO ELIMINATE THE POSSIBILITY OF PROPERTY DAMAGE DUE TO THE DEBRIS CAUSING BACKUP INTO PRIVATE PROPERTIES. IF IT IS DETERMINED THAT DEBRIS CAUSED A BACKUP, THE CONTRACTOR SHALL BE HELD RESPONSIBLE FOR DAMAGES.

18. THE CONTRACTOR SHALL MAKE SURE THAT ALL MANHOLES AND OTHER STRUCTURES ARE BUILT TO FINISHED GRADE.

19. NO TREES SHALL BE PLANTED WITHIN ANY SEWER EASEMENT OR WITHIN TEN (10) FEET OF ANY PUBLIC MANHOLES, PIPES OR INLETS.

20. "AS-BUILT" ELECTRONIC SUBMITTAL OR PRINTS ARE TO BE SUBMITTED TO DEVELOPMENT SERVICES AT COMPLETION OF THE PROJECT. "AS-BUILT" DRAWINGS ARE TO BE REPRODUCIBLE COPIES (OR ORIGINALS) OF THE APPROVED CONSTRUCTION DRAWINGS. ANY FIELD CHANGES ARE TO BE NOTED. THE DRAWINGS WILL STATE "AS-BUILT" IN LARGE BLOCK LETTERS. THE "AS-BUILT" ELECTRONIC SUBMITTAL OR PRINTS ARE TO BE SIGNED, DATED AND STAMPED BY A COLORADO REGISTERED ENGINEER.

21. AS-BUILT FIELD NOTES (IF REQUESTED), FROM WHICH THE AS-BUILT DRAWINGS ARE PREPARED, ARE TO BE PROVIDED ANDSTAMPED/SIGNED AND DATED BY THE COLORADO REGISTERED PROFESSIONAL LAND SURVEYOR. THESE NOTES WILL INCLUDE THE STATIONING OF ANY BUILDING SEWER STUBS INSTALLED.

22. UPON COMPLETION OF SITE GRADING AND SEWER CONSTRUCTION, THE OWNER OR DEVELOPER SHALL BE RESPONSIBLE FOR FURNISHING DEVELOPMENT SERVICES WITH A CERTIFICATE OF INSPECTION PREPARED BY THE COLORADO REGISTERED ENGINEER WHO PERFORMED OR SUPERVISED CONSTRUCTION INSPECTION, CERTIFYING THAT:

    A. A CONSTRUCTION INSPECTOR WAS ON THE JOB SITE AT ALL TIMES SEWER OR DRAINAGE FACILITY WORK WAS PERFORMED
    B. ALL STORM AND SANITARY SEWER FACILITIES, SITE GRADING, DETENTION POND GRADING AND OUTLET WORKS (IF ANY) WERE CONSTRUCTED IN COMPLIANCE WITH PLANS AND SPECIFICATIONS APPROVED BY THE DEPARTMENT OF PUBLIC WORKS
    C. THE AS-BUILT DRAWINGS INCLUDED ACCURATELY DEPICT THE FINAL INSTALLATION OF THE STORM DRAINAGE AND/OR SEWER SYSTEM.

    THIS CERTIFICATION SHALL BE REQUIRED FOR ALL STORM AND SANITARY SEWER FACILITIES IN ADDITION TO ANY INSPECTIONS MADE BY THE DIVISION OR THE DEPARTMENT OF PUBLIC WORKS.

ALL PERSONS AND ENTITIES INVOLVED IN THIS PROJECT SHALL HAVE THE RESPONSIBILITY TO TAKE WHATEVER STEPS NECESSARY TO PROTECT ALL WATER FACILITIES. IF ANY WATER FACILITY CANNOT BE ADEQUATELY PROTECTED, THEN SAID WATER FACILITIES SHALL BE RELOCATED OR REMOVED IN ACCORDANCE WITH DENVER WATER DEPARTMENT REQUIREMENTS.

STANDARD ABBREVIATIONS:

AC	-	ASPHALTIC CONCRETE
BCR	-	BEGINNING OF CURB STATION
BM	-	BENCHMARK
BW	-	BOTTOM OF WALL
C&G	-	CURB AND GUTTER
CL	-	CENTER LINE
CP	-	CONTROL POINT
DIA	-	DIAMETER
DW	-	DENVER WATER
E	-	ELECTRIC
EL	-	ELEVATION
EQ	-	EQUAL
EX	-	EXISTING
FF	-	FINISHED FLOOR
FG	-	FINISHED GRADE
FH	-	FIRE HYDRANT
FL	-	FLOW LINE
G	-	GAS
GB	-	GRADE BREAK
HORIZ	-	HORIZONTAL
HP	-	HIGH POINT
ID	-	INSIDE DIAMETER
IN	-	INCHES
INV	-	INVERT
IRR	-	IRRIGATION
JT	-	JOINT TRENCH
LF	-	LINEAR FEET
LS	-	LANDSCAPE
MAX	-	MAXIMUM
MH	-	MANHOLE
MIN	-	MINIMUM
NO	-	NUMBER
OD	-	OUTSIDE DIAMETER
PR	-	PROPOSED
R	-	RADIUS
RCP	-	REINFORCED CONCRETE PIPE
ROW	-	RIGHT OF WAY
RR	-	RAILROAD
SAN	-	SANITARY
SF	-	SQUARE FOOTAGE
STM	-	STORM
T	-	TELEPHONE
TC	-	TOP OF CURB
TF	-	TOP OF FOOTING
TG	-	TOP OF GRATE
TW	-	TOP OF WALL
TEMP	-	TEMPORARY
TYP	-	TYPICAL
VERT	-	VERTICAL
W	-	WATER
W/	-	WITH

MWRD NOTES:

1. MODIFICATION OF ANY MWRD MANHOLE MUST BE IN ACCORDANCE WITH MWRD STANDARD SPECIFICATIONS AND THE STANDARD MANHOLE DETAIL. IF THE FINAL GRADE OF A MWRD MANHOLE IS RAISED OR LOWERED FROM ITS CURRENT ELEVATION, IT SHALL CONFORM TO THE 18" MAXIMUM AND 10" MINIMUM DISTANCE FROM THE TOP OF THE CONE TO THE FINAL FINISHED GRADE AS SHOWN ON SAID DETAIL. IF THE REQUIRED FINAL GRADE IS GREATER THAN 18" OR LESS THAN 10" FROM THE EXISTING TOP OF CONE ELEVATION, THE CONE SHALL BE REMOVED, AND BARREL SECTIONS SHALL BE ADDED OR REMOVED TO COMPLY WITH STANDARD DETAIL. SHOULD ADDITIONAL STEPS BE REQUIRED DUE TO THE ADDITION OF BARREL SECTIONS, THEY SHALL BE ADDED AS REQUIRED.

2. NOTIFY MWRD 48 HOURS PRIOR TO CONSTRUCTION STARTING (ON OR ADJACENT TO ANY MWRD MANHOLES AT 303-286-3229.

3. NOTIFY AND INVITE MWRD TO THE PRECONSTRUCTION MEETING AT 303-286-3229.

EES ENTITLEMENT AND ENGINEERING SOLUTIONS, INC.
501 S Cherry St
Suite 300
Denver, CO 80246
www.ees.us.com
303-572-7997

wenk ASSOCIATES
PLANNERS & LANDSCAPE ARCHITECTS
303.628.0003

DENVER
THE MILE HIGH CITY

RIVER NORTH PARK
DENVER, COLORADO

COLORADO LICENSED PROFESSIONAL ENGINEER
JEFFREY M. ORR
11/19/18
47215

FOR AND ON BEHALF OF EES
NOT VALID WITHOUT ORIGINAL SIGNATURE

KEY PLAN:

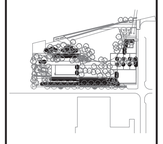

REVISIONS:

NAME	DATE

DRAWN BY: JLH

REVIEWED BY: JSP

PROJECT NUMBER: 15014

DATE: **OCTOBER, 2018**

ISSUE: BID SET

SHEET TITLE: NOTES

SHEET NUMBER: C2.0

8/21/2015 12:21 PM P:\WENK LARIMO PARK\08 CAD\C2.0 NOTES.DWG

© 2017, ALL RIGHTS RESERVED.

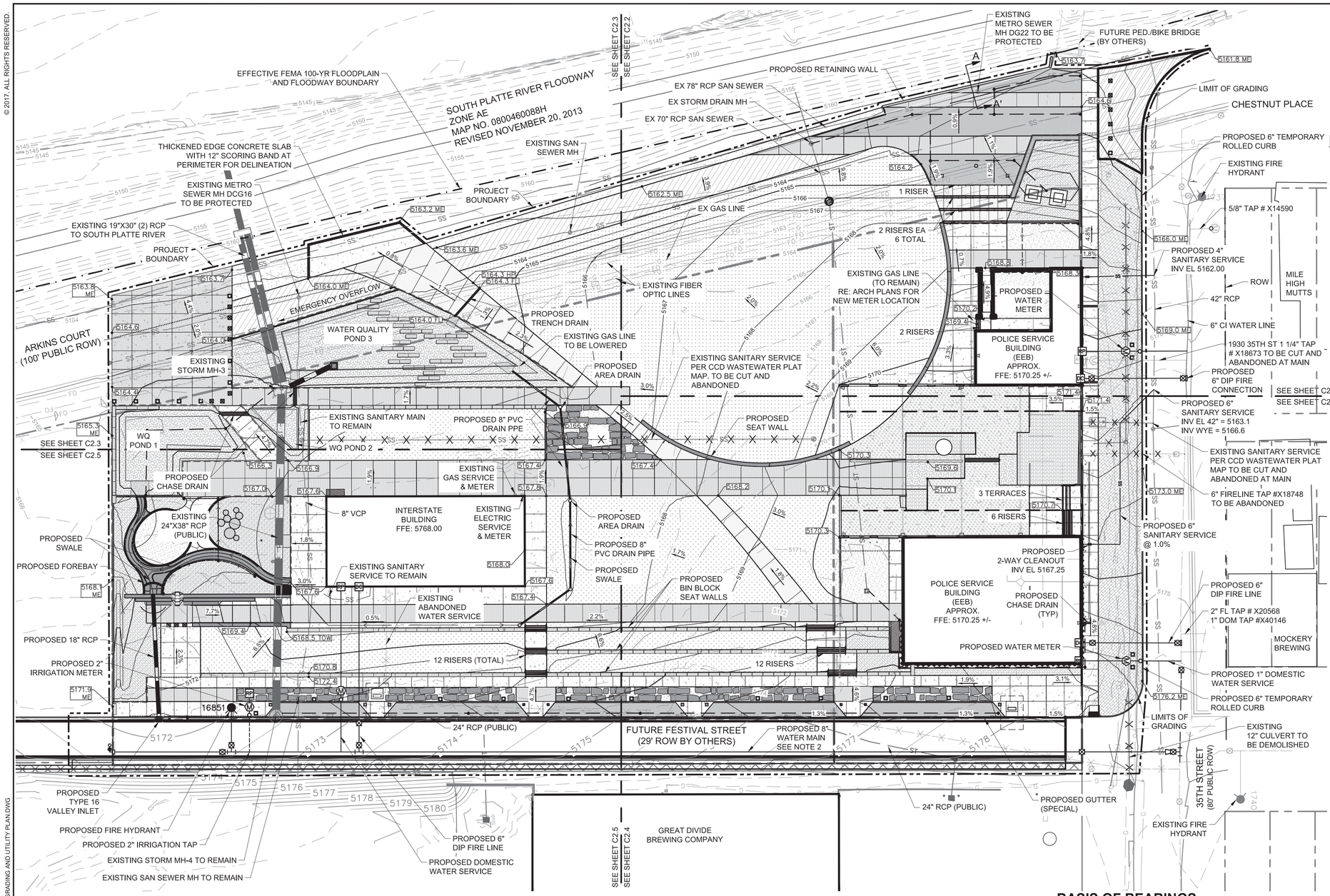

LEGEND

- PROPERTY BOUNDARY
- PROJECT BOUNDARY
- PROPOSED BUILDING
- PROPOSED RETAINING WALL
- PROPOSED GRASS-LINED SWALE
- PROPOSED AREA INLET (PRIVATE)
- PROPOSED CURB INLET (PRIVATE)
- PROPOSED CONTOUR
- EXISTING CONTOUR
- PROPOSED STORM SEWER
- EXISTING STORM SEWER
- PROPOSED STORM MANHOLE
- EXISTING STORM MANHOLE
- PROPOSED DOWNSPOUT
- PROPOSED SANITARY MANHOLE
- EXISTING SANITARY MANHOLE
- PROPOSED SANITARY CLEANOUT
- PROPOSED WATER METER
- PROPOSED FIRE HYDRANT
- EXISTING ROOF DRAIN TO REMAIN
- PROPOSED DRAINAGE FLOW ARROW/SLOPE
- ABBREVIATED SURFACE ELEVATIONS
  - SW: SIDEWALK
  - FG: FINISH GRADE
  - FL: FLOWLINE
  - LP: LOWPOINT
  - HP: HIGHPOINT
  - TW: TOP OF WALL
  - BW: BOTTOM OF WALL
  - TC: TOP OF CURB
  - ME: MATCH EXISTING
- CONCRETE
- UNDERDRAIN
- GRADE BREAK
- * SEE LANDSCAPE PLAN FOR HATCH PATTERN DESIGNATION
- CONCRETE - FINE TINE FINISH
- CONCRETE PAVING-EXISTING REFINISHED
- WATER QUALITY POND
- TURF
- CRUSHER FINES/GRAVEL
- SHRUBBERIES/LANDSCAPING
- CONCRETE STANDARD FIINISH
- CONCRETE SAND FINISH
- CONCRETE UNIT PAVERS-PERMEABLE
- CONCRETE PAVING-RECYCLED SLAB
- SCARIFIED CONCRETE
- EXISTING ASPHALT TO REMAIN
- FINE SAND
- BIN BLOCK WALL
- CONCRETE RETAINING WALL
- DECK
- ENGINEERED WOOD FIBER
- MSE WALL
- SITE LIGHTS
- ROOF DRAIN

PROJECT BENCHMARK

BENCHMARK IS CITY AND COUNTY OF DENVER BENCHMARK ELLIS, A 1-½" BRASS CAP LOCATED AT THE NORTHWEST CORNER OF ARKINS COURT AND 36TH STREET ON TOP OF FLASTONE OUTFALL INTO PLATTE RIVER (EAST SIDE) WITH A NAVD88 VERTICAL ELEVATION OF 5162.35.

811 Know what's below. Call before you dig.

CALL UTILITY NOTIFICATION CENTER OF COLORADO
1-800-922-1987 or 811
CALL 3-BUSINESS DAYS (NOT INCLUDING INITIAL DAY OF CONTACT) IN ADVANCE BEFORE YOU DIG, GRADE, OR EXCAVATE FOR THE MARKING OF UNDERGROUND MEMBER UTILITIES.

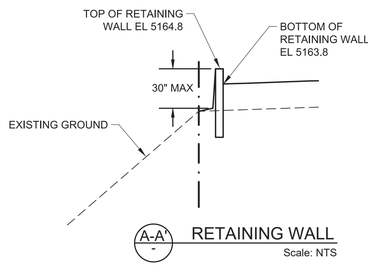

BASIS OF BEARINGS

BEARINGS ARE BASED ON THE NORTH LINE OF THE NORTHEAST QUARTER (NE¼) OF SECTION 27, TOWNSHIP 3 SOUTH, RANGE 68 WEST OF THE SIXTH PRINCIPAL MERIDIAN BETWEEN THE FOUND 2.5" CAP (LS 33204) AT THE NORTH QUARTER CORNER (N ¼) OF SAID SECTION 27 TOWNSHIP 3 SOUTH, RANGE 68 WEST OF THE SIXTH PRINCIPAL MERIDIAN AND THE FOUND CUT "+" IN STONE AT THE NORTHEAST QUARTER (NE ¼) OF SAID SECTION 27, TOWNSHIP 3 SOUTH, RANGE 68 WEST OF THE SIXTH PRINCIPAL MERIDIAN , WITH AN ASSUMED BEARING OF N89°57'50"W.

NOTES:

1. NO FILL OR STRUCTURES ARE ALLOWED WITHIN THE SOUTH PLATTE RIVER FLOODWAY ZONE AE.
2. 8" WATER MAIN AND ALL APPURTENANCES IN FESTIVAL STREET TO BE BY OTHERS.

EES ENTITLEMENT AND ENGINEERING SOLUTIONS, INC.
501 S Cherry St
Suite 300
Denver, CO 80246
www.ees.us.com
303-572-7997

wenk ASSOCIATES PLANNERS & LANDSCAPE ARCHITECTS 303.628.0003

DENVER THE MILE HIGH CITY

RIVER NORTH PARK

DENVER, COLORADO

COLORADO LICENSED PROFESSIONAL ENGINEER 11/19/18 47215 — FOR AND ON BEHALF OF EES NOT VALID WITHOUT ORIGINAL SIGNATURE

KEY PLAN:

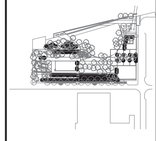

REVISIONS:

NAME	DATE

DRAWN BY: JLH

REVIEWED BY: JSP

PROJECT NUMBER: 15014

DATE: **OCTOBER, 2018**

ISSUE: BID SET

SHEET TITLE: OVERALL GRADING AND UTILITY PLAN

SHEET NUMBER: C2.1

8/21/2015 12:21 PM P:\WENK LARINO PARK\08 CAD\C2.1 GRADING AND UTILITY PLAN.DWG

© 2017. ALL RIGHTS RESERVED

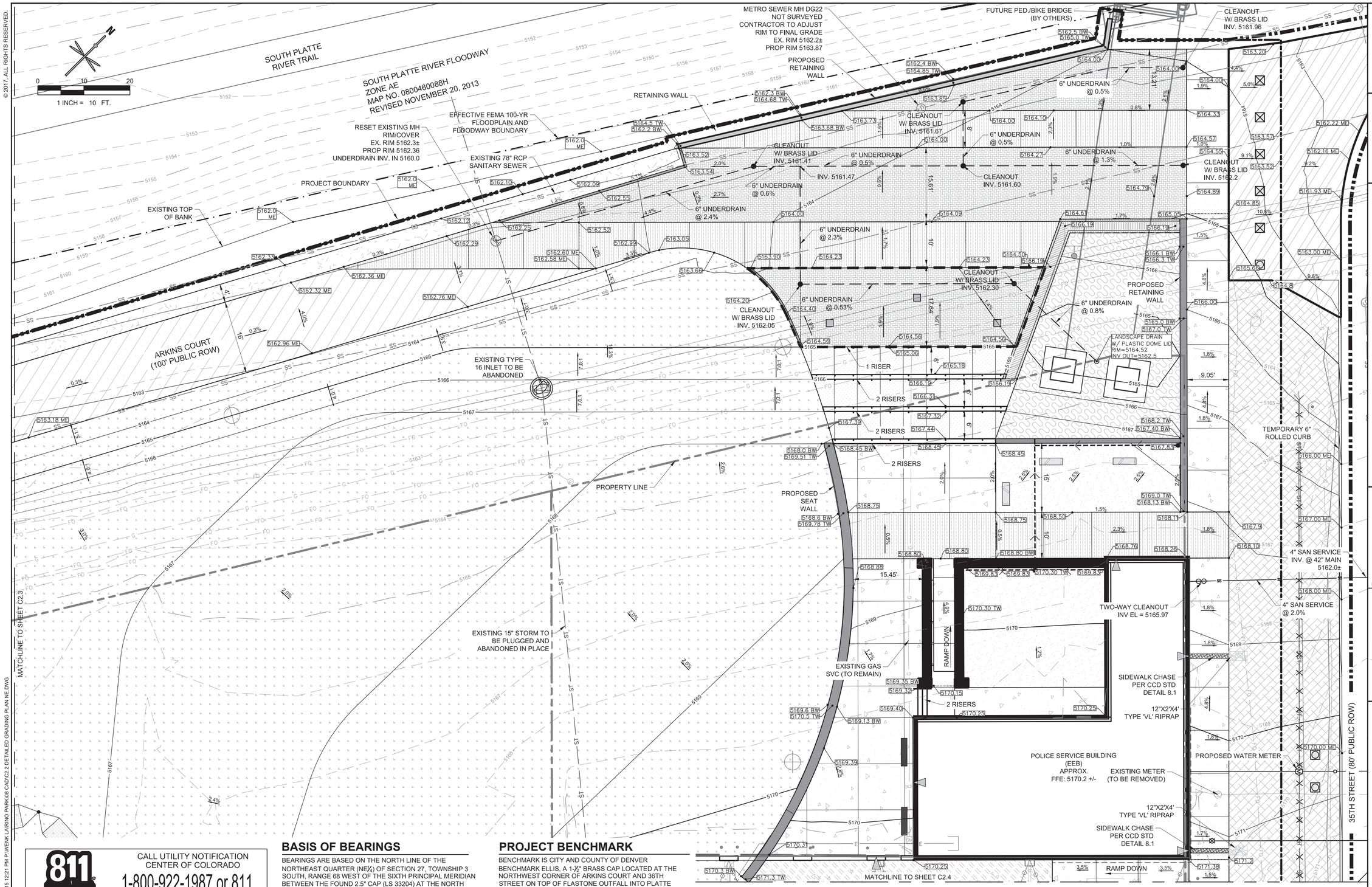

811 Know what's below. Call before you dig.

CALL UTILITY NOTIFICATION CENTER OF COLORADO

1-800-922-1987 or 811

CALL 3-BUSINESS DAYS (NOT INCLUDING INITIAL DAY OF CONTACT) IN ADVANCE BEFORE YOU DIG, GRADE, OR EXCAVATE FOR THE MARKING OF UNDERGROUND MEMBER UTILITIES.

BASIS OF BEARINGS

BEARINGS ARE BASED ON THE NORTH LINE OF THE NORTHEAST QUARTER (NE¼) OF SECTION 27, TOWNSHIP 3 SOUTH, RANGE 68 WEST OF THE SIXTH PRINCIPAL MERIDIAN BETWEEN THE FOUND 2.5" CAP (LS 33204) AT THE NORTH QUARTER CORNER (N ¼) OF SAID SECTION 27 TOWNSHIP 3 SOUTH, RANGE 68 WEST OF THE SIXTH PRINCIPAL MERIDIAN AND THE FOUND CUT "+" IN STONE AT THE NORTHEAST QUARTER (NE ¼) OF SAID SECTION 27, TOWNSHIP 3 SOUTH, RANGE 68 WEST OF THE SIXTH PRINCIPAL MERIDIAN , WITH AN ASSUMED BEARING OF N89°57'50"W.

PROJECT BENCHMARK

BENCHMARK IS CITY AND COUNTY OF DENVER BENCHMARK ELLIS, A 1-½" BRASS CAP LOCATED AT THE NORTHWEST CORNER OF ARKINS COURT AND 36TH STREET ON TOP OF FLASTONE OUTFALL INTO PLATTE RIVER (EAST SIDE) WITH A NAVD88 VERTICAL ELEVATION OF 5162.35.

Wenk ASSOCIATES PLANNERS & LANDSCAPE ARCHITECTS 303.628.0003

DENVER THE MILE HIGH CITY

RIVER NORTH PARK

DENVER, COLORADO

COLORADO LICENSED PROFESSIONAL ENGINEER 11/19/18 47215

FOR AND ON BEHALF OF EES
NOT VALID WITHOUT ORIGINAL SIGNATURE

KEY PLAN:

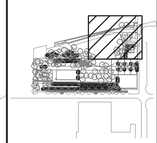

REVISIONS:

NAME	DATE

DRAWN BY: JLH

REVIEWED BY: JSP

PROJECT NUMBER: 15014

DATE: **OCTOBER, 2018**

ISSUE: BID SET

SHEET TITLE: DETAILED GRADING PLAN NE

SHEET NUMBER: C2.2

EES ENTITLEMENT AND ENGINEERING SOLUTIONS, INC. 501 S Cherry St Suite 300 Denver, CO 80246 www.ees.us.com 303-572-7997

8/21/2015 12:21 PM P:\WENK\LARINO PARK\08 CADD\C2.2 DETAILED GRADING PLAN NE.DWG

© 2017, ALL RIGHTS RESERVED.

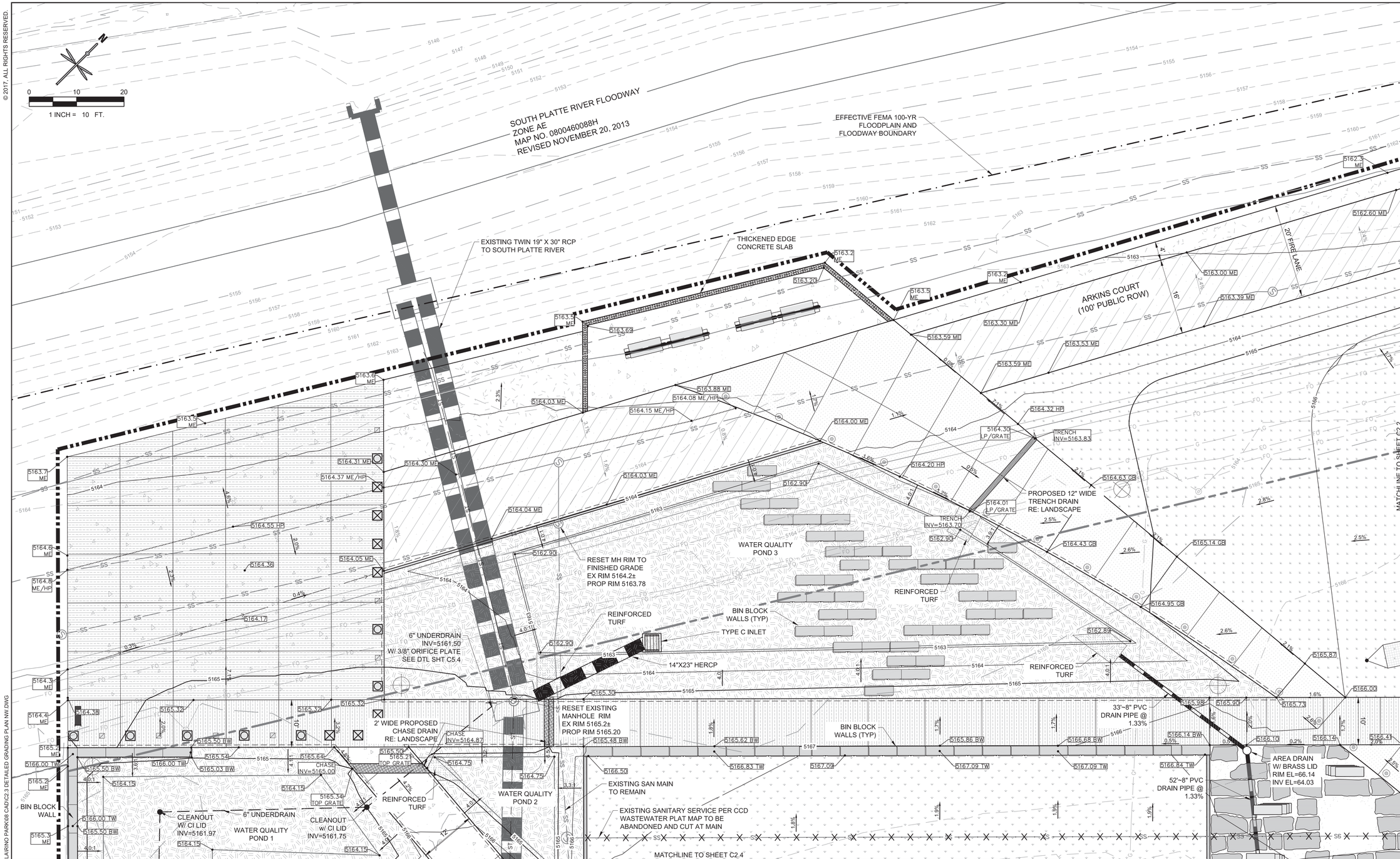

8/21/2015 12:21 PM P:\WENK LARINO PARK\08 CAD\C2.3 DETAILED GRADING PLAN NW.DWG

811 Know what's below. Call before you dig.

CALL UTILITY NOTIFICATION CENTER OF COLORADO

1-800-922-1987 or 811

CALL 3-BUSINESS DAYS (NOT INCLUDING INITIAL DAY OF CONTACT) IN ADVANCE BEFORE YOU DIG, GRADE, OR EXCAVATE FOR THE MARKING OF UNDERGROUND MEMBER UTILITIES.

BASIS OF BEARINGS

BEARINGS ARE BASED ON THE NORTH LINE OF THE NORTHEAST QUARTER (NE¼) OF SECTION 27, TOWNSHIP 3 SOUTH, RANGE 68 WEST OF THE SIXTH PRINCIPAL MERIDIAN BETWEEN THE FOUND 2.5" CAP (LS 33204) AT THE NORTH QUARTER CORNER (N ¼) OF SAID SECTION 27 TOWNSHIP 3 SOUTH, RANGE 68 WEST OF THE SIXTH PRINCIPAL MERIDIAN AND THE FOUND CUT "+" IN STONE AT THE NORTHEAST QUARTER (NE ¼) OF SAID SECTION 27, TOWNSHIP 3 SOUTH, RANGE 68 WEST OF THE SIXTH PRINCIPAL MERIDIAN , WITH AN ASSUMED BEARING OF N89°57'50"W.

PROJECT BENCHMARK

BENCHMARK IS CITY AND COUNTY OF DENVER BENCHMARK ELLIS, A 1-½" BRASS CAP LOCATED AT THE NORTHWEST CORNER OF ARKINS COURT AND 36TH STREET ON TOP OF FLASTONE OUTFALL INTO PLATTE RIVER (EAST SIDE) WITH A NAVD88 VERTICAL ELEVATION OF 5162.35.

EES ENTITLEMENT AND ENGINEERING SOLUTIONS, INC.
501 S Cherry St
Suite 300
Denver, CO 80246
www.ees.us.com
303-572-7997

wenk
ASSOCIATES
PLANNERS & LANDSCAPE ARCHITECTS
303.628.0003

DENVER THE MILE HIGH CITY

RIVER NORTH PARK

DENVER, COLORADO

COLORADO LICENSED PROFESSIONAL ENGINEER
CRISTAL M. ORPINEDA
11/19/18
47215

FOR AND ON BEHALF OF EES
NOT VALID WITHOUT ORIGINAL SIGNATURE

KEY PLAN:



REVISIONS:

NAME	DATE

DRAWN BY: JLH

REVIEWED BY: JSP

PROJECT NUMBER: 15014

DATE: OCTOBER, 2018

ISSUE: BID SET

SHEET TITLE: DETAILED GRADING PLAN NW

SHEET NUMBER: C2.3

© 2017. ALL RIGHTS RESERVED

MATCHLINE TO SHEET C2.2

MATCHLINE TO SHEET C2.5

EXISTING SANITARY SERVICE PER CCD WASTEWATER PLAT MAP TO BE ABANDONED AND CUT AT MAIN

RETAINING WALL

EXISTING TRENCH DRAIN TO BE REMOVED

18" DEPTH GROWING MEDIA PER RAIN GARDEN DETAIL

2' SIDEWALK CHASE RE: LANDSCAPE

CHASE INV=5169.57

CHASE INV=5169.94

EXISTING OVERHEAD ROOF TO BE PRESERVED

RAMP - 29.5'

EXISTING TRENCH DRAIN TO BE REMOVED

RETAINING WALL

18" DEPTH GROWING MEDIA PER RAIN GARDEN DETAIL

EXISTING TRENCH DRAIN TO BE REMOVED

EXISTING SANITARY SERVICE PER CCD WASTEWATER PLAT MAP TO BE ABANDONED. LOCATION AND SIZE TO BE VERIFIED

3 TERRACES

EXISTING TRENCH DRAIN

6 RISERS

TEMPORARY 6" ROLLED ASPHALT CURB

EXISTING OVERHEAD ROOF TO BE PRESERVED

TWO-WAY CLEANOUT INV EL=5167.65

EXISTING TRENCH DRAIN

6" SAN SERVICE @ 1%

CONCRETE EDGE BAND RE: LANDSCAPE

EXISTING AREA DRAIN TO REMAIN
ADJUST RIM TO EL: 5170.15
INV IN: 5166.65

4" SOLID WALL DRAIN @ 5%

POLICE SERVICE BUILDING (EEB)
APPROX.
FFE: 5170.25 +/-

EXISTING TRENCH DRAIN

12"X2'X4' TYPE 'VL' RIPRAP

SIDEWALK CHASE RE: LANDSCAPE PLANS

CLEANOUT W/ BRASS LID INV. 5172.75

4" UNDERDRAIN @ 0.5%

CLEANOUT W/ BRASS LID INV. 5172.63

35TH STREET (80' PUBLIC ROW)

51'~6" DI FIRE LINE

55'~1" DOMESTIC WATER

PROPOSED WATER METER

CLEANOUT W/ BRASS LID INV. 5169.14

4" UNDERDRAIN @ 3.4%

CONCRETE EDGE BAND RE: LANDSCAPE

BIN BLOCK SEAT WALL

4 RISERS

CLEANOUT W/ BRASS LID INV. 5173.14

RESET MH RIM TO FINISHED GRADE
EX RIM 5175.24
PROP RIM 6176.29

6" UNDERDRAIN @ 1.4%

CONCRETE EDGE BAND RE: LANDSCAPE

TRANSFORMER ON CONCRETE PAD

GUTTER (SPECIAL) RE: LANDSCAPE

FUTURE FESTIVAL STREET (29' ROW BY OTHERS)

CLEANOUT W/ BRASS LID INV. 5175.96

BEGIN TEMPORARY 6" ROLLED ASPHALT CURB
DEMOLISH EXISTING STORM

0 10 20
1 INCH = 10 FT.

811 Know what's below. Call before you dig.

CALL UTILITY NOTIFICATION CENTER OF COLORADO
1-800-922-1987 or 811
CALL 3-BUSINESS DAYS (NOT INCLUDING INITIAL DAY OF CONTACT) IN ADVANCE BEFORE YOU DIG, GRADE, OR EXCAVATE FOR THE MARKING OF UNDERGROUND MEMBER UTILITIES.

BASIS OF BEARINGS

BEARINGS ARE BASED ON THE NORTH LINE OF THE NORTHEAST QUARTER (NE¼) OF SECTION 27, TOWNSHIP 3 SOUTH, RANGE 68 WEST OF THE SIXTH PRINCIPAL MERIDIAN BETWEEN THE FOUND 2.5" CAP (LS 33204) AT THE NORTH QUARTER CORNER (N ¼) OF SAID SECTION 27 TOWNSHIP 3 SOUTH, RANGE 68 WEST OF THE SIXTH PRINCIPAL MERIDIAN AND THE FOUND CUT "+" IN STONE AT THE NORTHEAST QUARTER (NE ¼) OF SAID SECTION 27, TOWNSHIP 3 SOUTH, RANGE 68 WEST OF THE SIXTH PRINCIPAL MERIDIAN , WITH AN ASSUMED BEARING OF N89°57'50"W.

PROJECT BENCHMARK

BENCHMARK IS CITY AND COUNTY OF DENVER BENCHMARK ELLIS, A 1-½" BRASS CAP LOCATED AT THE NORTHWEST CORNER OF ARKINS COURT AND 36TH STREET ON TOP OF FLASTONE OUTFALL INTO PLATTE RIVER (EAST SIDE) WITH A NAVD88 VERTICAL ELEVATION OF 5162.35.

wenk ASSOCIATES PLANNERS & LANDSCAPE ARCHITECTS 303.628.0003

DENVER THE MILE HIGH CITY

501 S Cherry St
Suite 300
Denver, CO 80246
www.ees.us.com
303-572-7997

RIVER NORTH PARK
DENVER, COLORADO

COLORADO LICENSED PROFESSIONAL ENGINEER 11/19/18 47215

FOR AND ON BEHALF OF EES
NOT VALID WITHOUT ORIGINAL SIGNATURE

KEY PLAN:

REVISIONS:
NAME DATE

DRAWN BY: JLH

REVIEWED BY: JSP

PROJECT NUMBER: 15014

DATE: **OCTOBER, 2018**

ISSUE: BID SET

SHEET TITLE: DETAILED GRADING PLAN SE

SHEET NUMBER: C2.4

8/21/2015 12:21 PM P:\WENK\LARINO PARK\08 CAD\C2.4 DETAILED GRADING PLAN SE.DWG

© 2017, ALL RIGHTS RESERVED.

MATCHLINE TO SHEET C2.3

WATER QUALITY POND 3

BIN BLOCK WALL

UNDERDRAIN INV EL= 5164.50

REINFORCED TURF

6" UNDERDRAIN @ 0.75%

CLEANOUT W/ BRASS LID INV EL= 5164.57

CLEANOUT W/ BRASS LID INV EL= 5164.72

TELESCOPE

PROPOSED SWALE

6" UNDERDRAIN @ 0.75%

CLEANOUT W/ BRASS LID INV EL= 5164.98

PROPOSED GROUTED COBBLE FOREBAY

CLEANOUT W/ BRASS LID INV EL= 5165.27

PROPOSED SLIDE

CLEANOUT W/ BRASS LID INV EL= 5165.15

EXISTING SEWER 8" VCP

EXISTING 24"X38" RCP (PUBLIC)

INTERSTATE BUILDING
FFE: 5768.00

EXISTING SANITARY SERVICE TO REMAIN

EXISTING GAS SERVICE & METER

EXISTING ELECTRIC SERVICE & METER

PROPOSED AREA INLET W/ BRASS LID
RIM EL=67.28
INV EL=65.53

8" PVC @ 1.33%

PROPOSED AREA INLET W/ CAST IRON LID
RIM EL=66.43
INV EL=64.70

PROPOSED SWALE

8" PVC @ 1.00%

PROPOSED AREA INLET W/ CAST IRON LID
RIM EL=66.93
INV EL=65.23

MATCHLINE TO SHEET C2.4

PROPOSED BERM w/ SWALE

PROPOSED RETAINING WALL

PROPOSED 1" DOMESTIC WATER SERVICE

EXISTING WATER SERVICE TO BE REMOVED

PROPOSED 6" FIRE LINE

PROPOSED BIN BLOCK SEAT WALL

4 RISERS

PROPOSED BIN BLOCK SEAT WALL

PROPOSED BIN BLOCK SEAT WALL

PROPOSED WATER METER

BEGIN CURB TRANSITION (FROM 2" SPECIAL)

END CURB TRANSITION (TO 2" SPECIAL)

END CURB TRANSITION (TO 4" SPECIAL)

6" UNDERDRAIN @ 1.4%

CLEANOUT W/ BRASS LID INV EL= 5171.81

BEGIN CURB TRANSITION (FROM 4" SPECIAL)

PROPOSED SINGLE-TYPE 16 VALLEY INLET

PROPOSED FIRE HYD

PROPOSED 2" IRRIGATION TAP (BY OTHERS)

EXISTING STM MH RESET MH RIM TO FINISHED GRADE
EX RIM 5174.1±
PROP RIM 5172.46

24" RCP (PUBLIC)
EXISTING SAN SEW MH RESET MH RIM TO FINISHED GRADE
EX RIM 5174.3±
PROP RIM 5172.71

CONCRETE PAD AND TRANSFORMER

PROPOSED GUTTER (SPECIAL)

FUTURE FESTIVAL STREET
(29' ROW BY OTHERS)

EXISTING STORM MH RESET MH RIM TO FINISHED GRADE

24" RCP (PUBLIC)

0 10 20
1 INCH = 10 FT.

811 Know what's below. Call before you dig.

CALL UTILITY NOTIFICATION CENTER OF COLORADO
1-800-922-1987 or 811
CALL 3-BUSINESS DAYS (NOT INCLUDING INITIAL DAY OF CONTACT) IN ADVANCE BEFORE YOU DIG, GRADE, OR EXCAVATE FOR THE MARKING OF UNDERGROUND MEMBER UTILITIES.

BASIS OF BEARINGS

BEARINGS ARE BASED ON THE NORTH LINE OF THE NORTHEAST QUARTER (NE¼) OF SECTION 27, TOWNSHIP 3 SOUTH, RANGE 68 WEST OF THE SIXTH PRINCIPAL MERIDIAN BETWEEN THE FOUND 2.5" CAP (LS 33204) AT THE NORTH QUARTER CORNER (N ¼) OF SAID SECTION 27 TOWNSHIP 3 SOUTH, RANGE 68 WEST OF THE SIXTH PRINCIPAL MERIDIAN AND THE FOUND CUT "+" IN STONE AT THE NORTHEAST QUARTER (NE ¼) OF SAID SECTION 27, TOWNSHIP 3 SOUTH, RANGE 68 WEST OF THE SIXTH PRINCIPAL MERIDIAN , WITH AN ASSUMED BEARING OF N89°57'50"W.

PROJECT BENCHMARK

BENCHMARK IS CITY AND COUNTY OF DENVER BENCHMARK ELLIS, A 1-½" BRASS CAP LOCATED AT THE NORTHWEST CORNER OF ARKINS COURT AND 36TH STREET ON TOP OF FLASTONE OUTFALL INTO PLATTE RIVER (EAST SIDE) WITH A NAVD88 VERTICAL ELEVATION OF 5162.35.

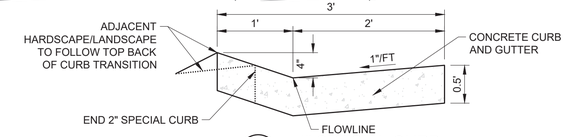

1 – 4" SPECIAL CURB
Scale: N.T.S.

EES ENTITLEMENT AND ENGINEERING SOLUTIONS, INC.
501 S Cherry St
Suite 300
Denver, CO 80246
www.ees.us.com
303-572-7997

wenk ASSOCIATES
PLANNERS & LANDSCAPE ARCHITECTS
303.628.0003

DENVER THE MILE HIGH CITY

RIVER NORTH PARK

DENVER, COLORADO

COLORADO LICENSED PROFESSIONAL ENGINEER
JOHN L. HOLLENBECK
11/19/18
47215

FOR AND ON BEHALF OF EES
NOT VALID WITHOUT ORIGINAL SIGNATURE

KEY PLAN:

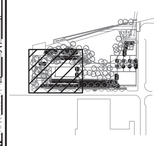

REVISIONS:

NAME	DATE

DRAWN BY: JLH

REVIEWED BY: JSP

PROJECT NUMBER: 15014

DATE: **OCTOBER, 2018**

ISSUE: BID SET

SHEET TITLE: DETAILED GRADING PLAN SW

SHEET NUMBER: C2.5

8/21/2015 12:21 PM P:\WENK LJARNO PARK\08 CAD\C2.5 DETAILED GRADING PLAN SW.DWG

© 2017, ALL RIGHTS RESERVED.

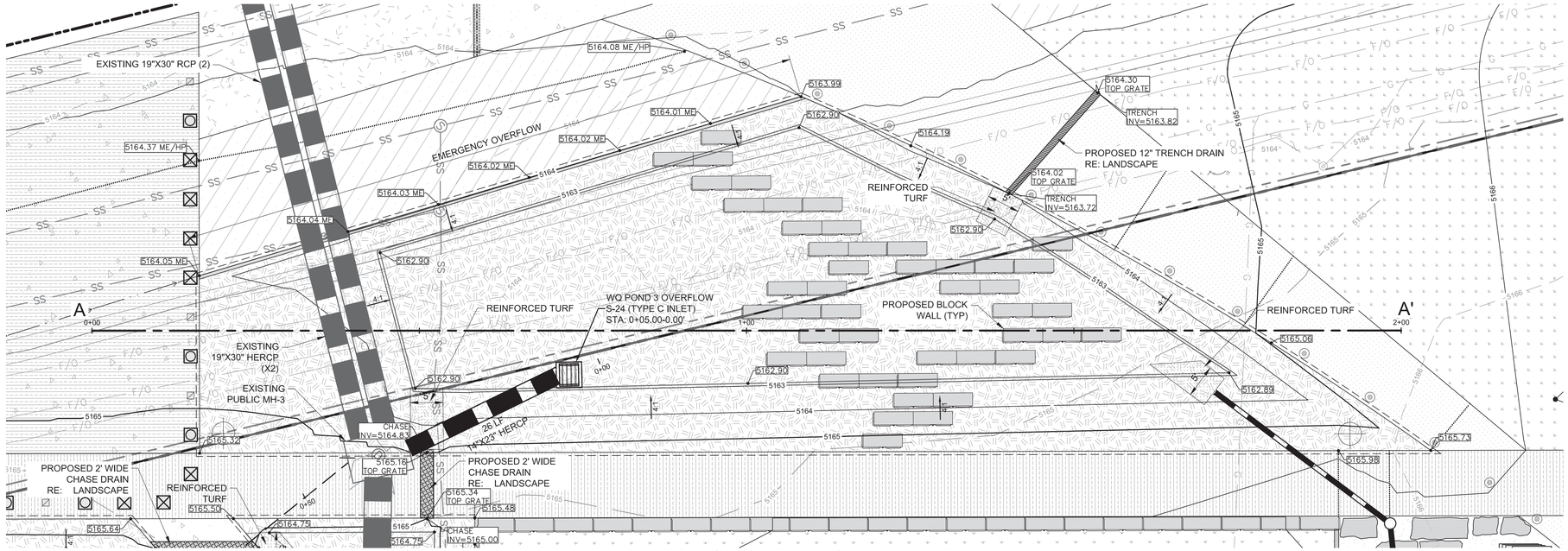

WATER QUALITY POND 3 DETAIL

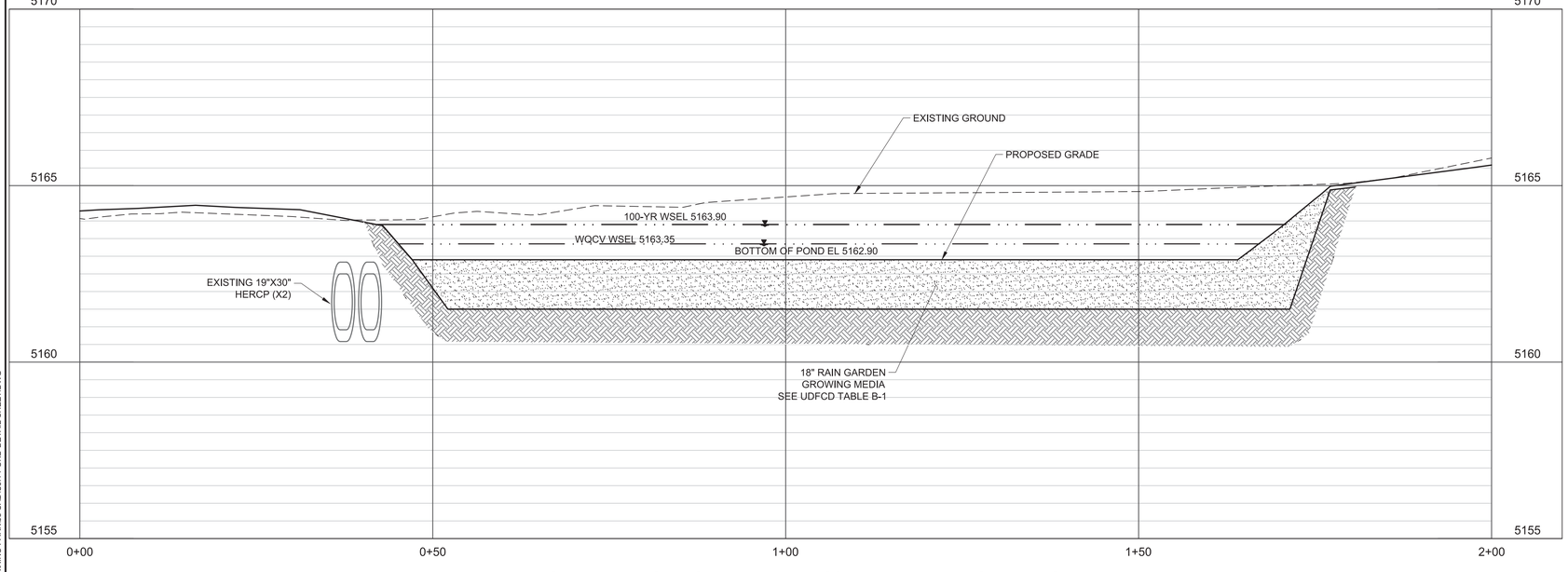

PROFILE WQ POND 3 A-A (STA: 0+00 TO 2+00)

SCALES: 1'=10' HORIZONTAL, 1"=2' VERTICAL

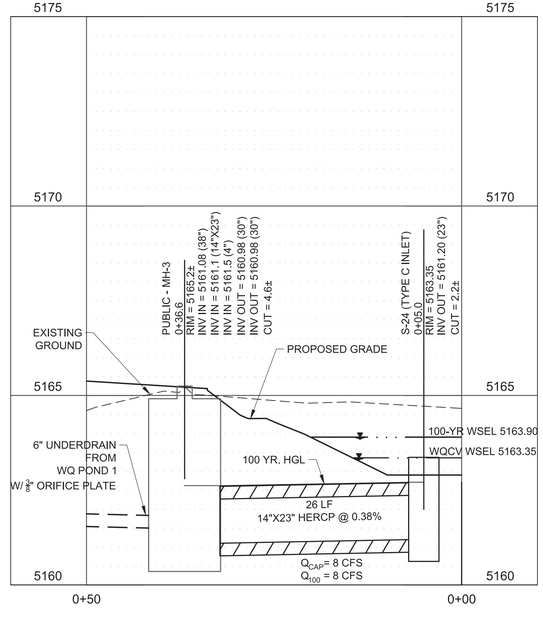

PROFILE WQ POND 3 OVERFLOW (STA: 0+00 TO 0+50)

SCALES: 1'=10' HORIZONTAL, 1"=2' VERTICAL

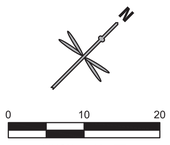

LEGEND

- PROPERTY BOUNDARY
- PROPOSED BUILDING
- PROPOSED RETAINING WALL
- PROPOSED GRASS-LINED SWALE
- PROPOSED AREA INLET (PRIVATE)
- PROPOSED CURB INLET (PRIVATE)
- PROPOSED STORM SEWER
- EXISTING STORM SEWER
- PROPOSED STORM MANHOLE
- EXISTING STORM MANHOLE
- PROPOSED DOWNSPOUT
- PROPOSED WATER LINE
- EXISTING WATER LINE
- PROPOSED WATER METER
- PROPOSED FIRE HYDRANT
- PROPOSED ELECTRICAL LINE

CONCRETE

* SEE LANDSCAPE PLAN FOR HATCH PATTERN DESIGNATION

wenk
ASSOCIATES
PLANNERS &
LANDSCAPE
ARCHITECTS
303.628.0003

DENVER
THE MILE HIGH CITY

RIVER NORTH PARK

DENVER, COLORADO



FOR AND ON BEHALF OF EES
NOT VALID WITHOUT ORIGINAL SIGNATURE

KEY PLAN:

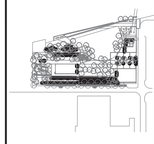

REVISIONS:
NAME DATE

DRAWN BY:
JLH

REVIEWED BY:
JSP

PROJECT NUMBER:
15014

DATE:
OCTOBER, 2018

ISSUE:
BID SET

SHEET TITLE:
POND DETAIL SHEET 1

SHEET NUMBER:
C5.1

EES
ENTITLEMENT AND ENGINEERING SOLUTIONS, INC.
501 S Cherry St
Suite 300
Denver, CO 80246
www.ees.us.com
303-572-7997

8/21/2015 12:21 PM P:\WENK LAIRINO PARK\08 CAD\CS.1 POND DETAIL SHEET.DWG

© 2017, ALL RIGHTS RESERVED.

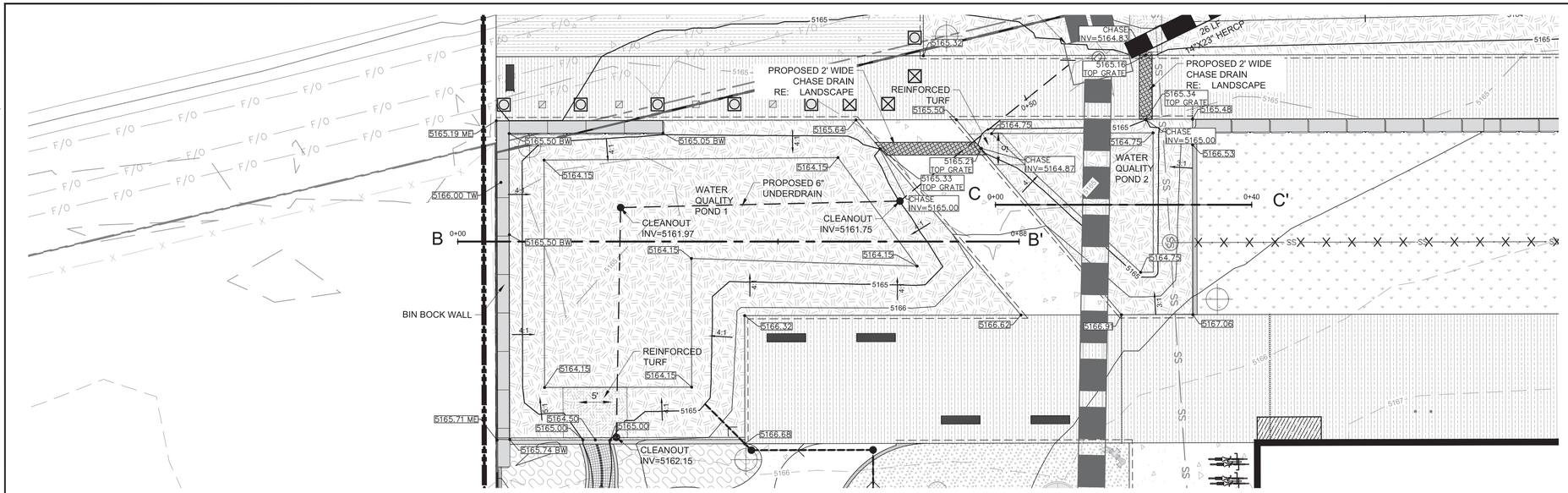

WATER QUALITY PONDS 1 AND 2 DETAILS

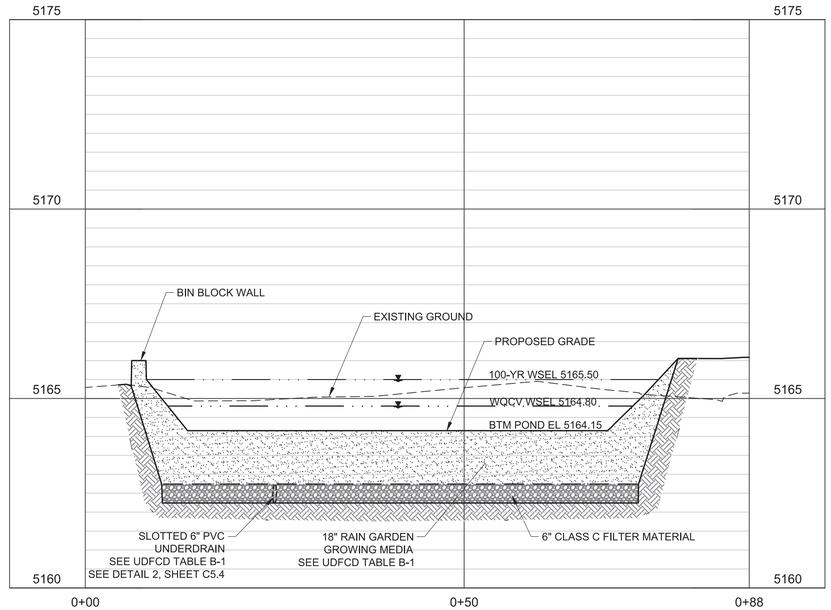

PROFILE POND 1 B-B' (STA: 0+00 TO 0+88)

SCALES: 1'=10' HORIZONTAL, 1"=2' VERTICAL

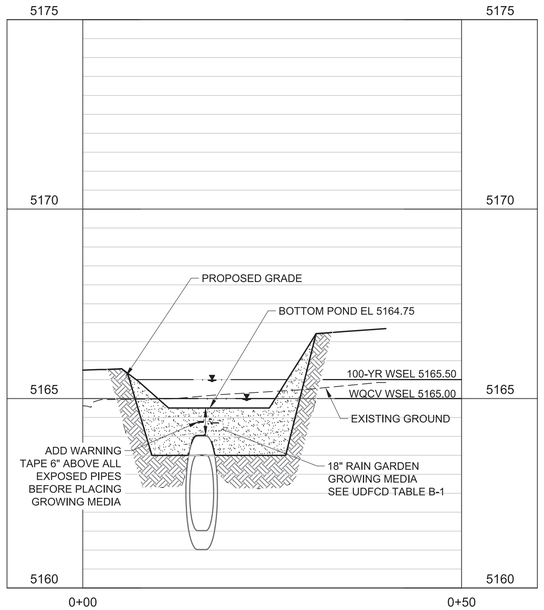

PROFILE POND 2 C-C' (STA: 0+00 TO 0+50)

SCALES: 1'=10' HORIZONTAL, 1"=2' VERTICAL

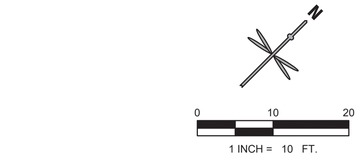

LEGEND

- PROPERTY BOUNDARY
- PROPOSED BUILDING
- PROPOSED RETAINING WALL
- PROPOSED GRASS-LINED SWALE
- PROPOSED AREA INLET (PRIVATE)
- PROPOSED CURB INLET (PRIVATE)
- PROPOSED STORM SEWER
- EXISTING STORM SEWER
- PROPOSED STORM MANHOLE
- EXISTING STORM MANHOLE
- PROPOSED DOWNSPOUT
- PROPOSED WATER LINE
- EXISTING WATER LINE
- PROPOSED WATER METER
- PROPOSED FIRE HYDRANT
- PROPOSED ELECTRICAL LINE

CONCRETE

* SEE LANDSCAPE PLAN FOR HATCH PATTERN DESIGNATION

wenk
ASSOCIATES
PLANNERS & LANDSCAPE ARCHITECTS
303.628.0003

DENVER
THE MILE HIGH CITY

RIVER NORTH PARK
DENVER, COLORADO

COLORADO LICENSED PROFESSIONAL ENGINEER
11/19/18
47215
FOR AND ON BEHALF OF EES
NOT VALID WITHOUT ORIGINAL SIGNATURE

KEY PLAN:

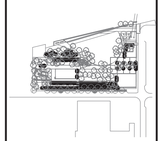

REVISIONS:
NAME DATE

DRAWN BY: JLH

REVIEWED BY: JSP

PROJECT NUMBER: 15014

DATE: **OCTOBER, 2018**

ISSUE: BID SET

SHEET TITLE: POND DETAIL SHEET 2

SHEET NUMBER: C5.2

EES ENTITLEMENT AND ENGINEERING SOLUTIONS, INC.
501 S Cherry St
Suite 300
Denver, CO 80246
www.ees.us.com
303-572-7997

8/21/2015 12:21 PM P:\WENK LARINO PARK\08 CAD\CS\ 1 POND DETAIL SHEET.DWG

© 2017, ALL RIGHTS RESERVED.

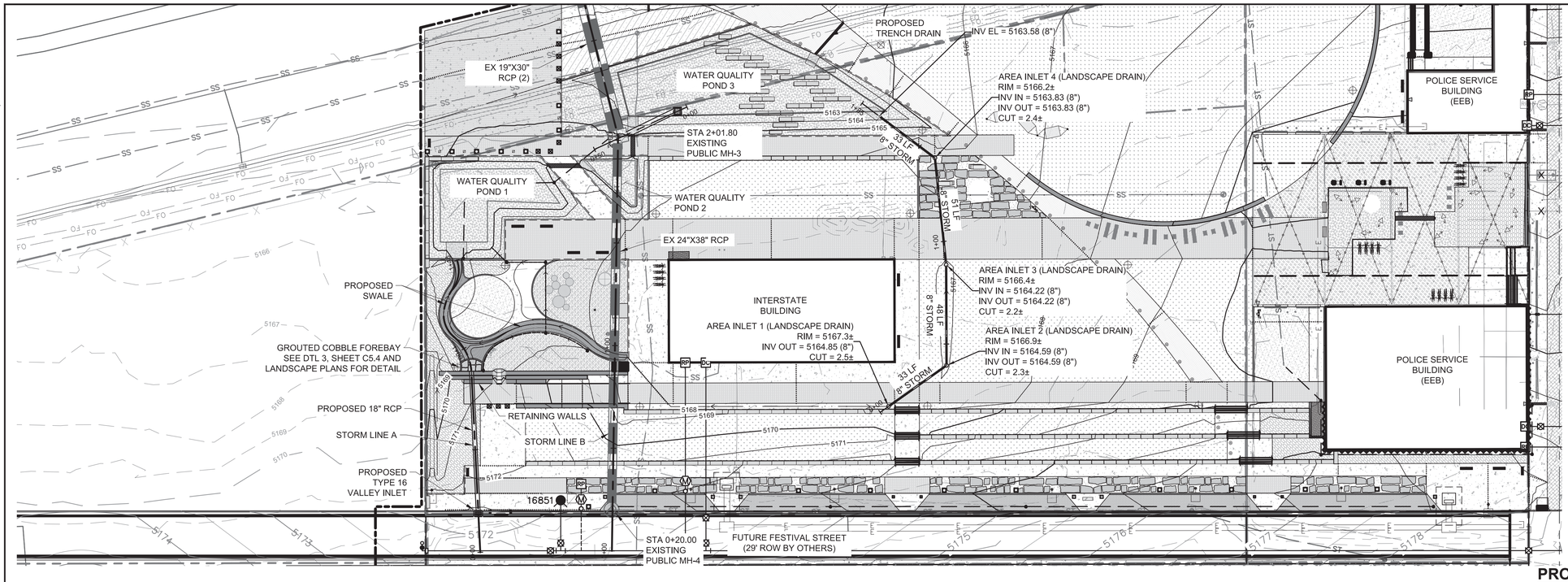

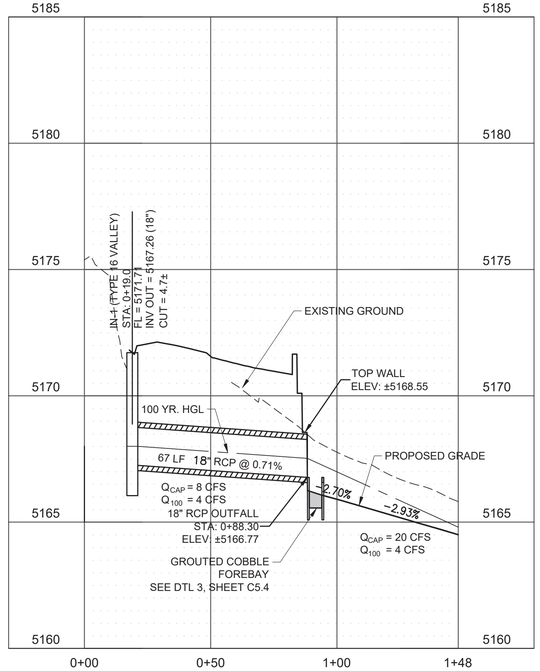

PROFILE STORM A (STA: 0+00 TO 1+48)

SCALES: 1'=30' HORIZONTAL, 1"=3' VERTICAL

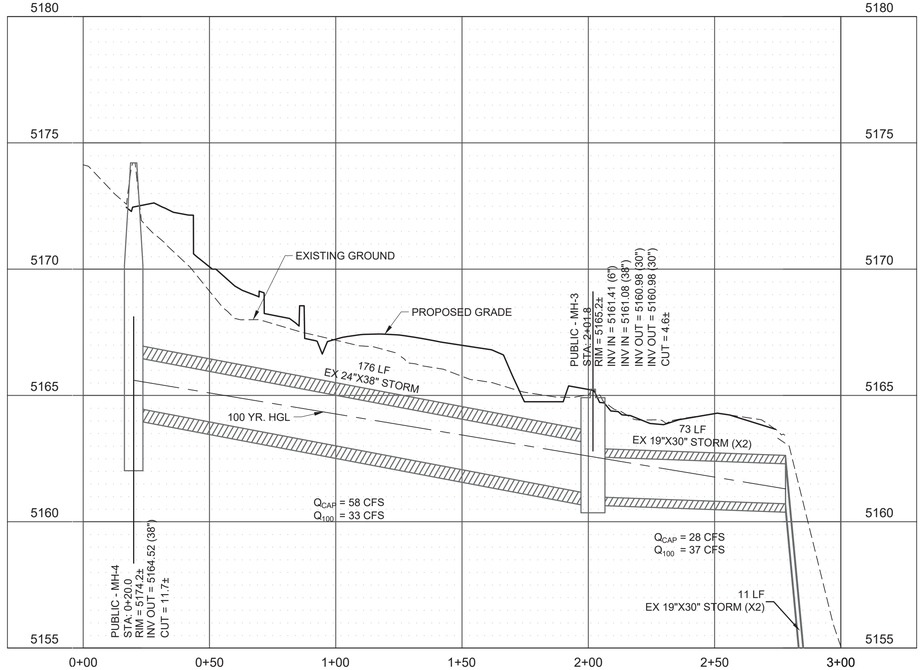

PROFILE STORM B (STA: 0+00 TO 3+00)

SCALES: 1'=30' HORIZONTAL, 1"=3' VERTICAL

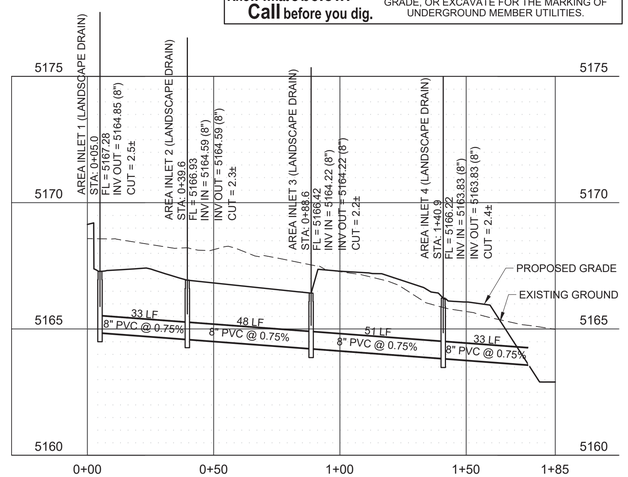

PROFILE AREA DRAIN (STA: 0+00 TO 1+85)

SCALES: 1'=30' HORIZONTAL, 1"=3' VERTICAL

PROJECT BENCHMARK

BENCHMARK IS CITY AND COUNTY OF DENVER
BENCHMARK ELLIS, A 1-½" BRASS CAP LOCATED AT THE NORTHWEST CORNER OF ARKINS COURT AND 36TH STREET ON TOP OF FLASTONE OUTFALL INTO PLATTE RIVER (EAST SIDE) WITH A NAVD88 VERTICAL ELEVATION OF 5162.35.

811 Know what's below. Call before you dig.

CALL UTILITY NOTIFICATION CENTER OF COLORADO
1-800-922-1987 or 811
CALL 3-BUSINESS DAYS (NOT INCLUDING INITIAL DAY OF CONTACT) IN ADVANCE BEFORE YOU DIG, GRADE, OR EXCAVATE FOR THE MARKING OF UNDERGROUND MEMBER UTILITIES.

EES ENTITLEMENT AND ENGINEERING SOLUTIONS, INC.
501 S Cherry St
Suite 300
Denver, CO 80246
www.ees.us.com
303-572-7997

WENK ASSOCIATES
PLANNERS & LANDSCAPE ARCHITECTS
303.628.0003

DENVER THE MILE HIGH CITY

RIVER NORTH PARK
DENVER, COLORADO

COLORADO LICENSED PROFESSIONAL ENGINEER
11/19/18
47215
FOR AND ON BEHALF OF EES
NOT VALID WITHOUT ORIGINAL SIGNATURE

KEY PLAN:

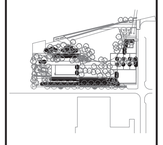

REVISIONS:
NAME DATE

DRAWN BY: JLH
REVIEWED BY: JSP
PROJECT NUMBER: 15014
DATE: **OCTOBER, 2018**
ISSUE: BID SET
SHEET TITLE: STORM SEWER PLAN & PROFILE
SHEET NUMBER: C5.3

8/21/2015, 12:21 PM P:\WENK LARINO PARK\08 CAD\C5.3 STORM SEWER PLAN & PROFILE.DWG

© 2017, ALL RIGHTS RESERVED.

UDFCD - VOLUME 3

TABLE B-1: MATERIAL SPECIFICATION FOR BIORETENTION/RAIN GARDEN FACILITIES

Material		Specification			Submittals	Testing	Notes
Bioretention Growing Media (soil + organics)	Bioretention soil	Particle size distribution: 80-90% sand (0.05 - 2.0 mm diameter) 3-17% silt (0.002-0.5 mm diameter) 3-17% clay (<0.002 diameter) Chemical attribute and nutrient analysis: pH 6.8 - 7.5 organic matter < 1.5% nitrogen <15 ppm phosphorus < 15 ppm salinity < 6 mmhos/cm			Particle size distribution and nutrient analysis required.		Percentages are in weight.
	Bioretention organics	3 to 5% shredded mulch (by weight of growing media)					bioretention soil required. Aged 6 months (minimum).
Landscape mulch		Shredded hardwood					Aged 6 months (minimum). No weed fabric allowed.
Underdrain aggregate	CDOT filter material (Class B or C as specified)		Mass Percent Passing Square Mesh Sieve		Particle size distribution required.		
		Sieve Size	Class B	Class C			
		37.5 mm (1.5")	100				
		19.0 mm (0.75")		100			
		4.75 mm (No.4)	20-60	60-100			
		1.18 um (No. 16)	10-30				
		300 um (No. 50)	0-10	10-30			
		150 um (No. 100)		0-10			
		75 um (No. 200)	0-3	0-3			
Underdrain Pipe		Pipe diameter and type	Maximum slot width (inches)	Minimum open area (per foot)	Required	Pipe must conform to requirements of ASTM designation F949.There shall be no evidence of splitting, cracking, or breaking when the pipe is tested per ASTM test method D2412 in accordance with F949 section 7.5 and ASTM F794 section 8.5.	Contech A-2000 slotted pipe (or equal)
		4-inch slotted PVC	0.032	1.90 in.²			
		6-inch slotted PVC	0.032	1.98 in.²			
Impermeable liner			Thickness 0.76 mm (30 mil)	Test method	Required	Thermal welding required for fully lined facilities (not a cutain). Leak testing in the field required.	
		Thickness, % Tolerance	+/-5	ASTM D 1593			
		Tensile strength, kN/m (lb/in)	12.25 (70)	ASTM D8 82, method B			
		Modulus at 100% elongation, kN/m	5.25 (30)	ASTM D8 82, method B			
		Ultimate elongation, %	350	ASTM D8 82, method A			
		Tear resistance, N(lbs)	38 (8.5)	ASTM D 1004			
		Low temperature impact, ° C (° F)	-29 (-20)	ASTM D 1790			
		Volatile loss, % maximum	0.7	ASTM D8 82, method A			
		Pinholes, no. per 8 m² (no. per 10 yd.²)	1 (max)	N/A			
		Bonded seam strength, % of tensile	80	N/A			

Table B-1. Material specification for bioretention/rain garden facilities

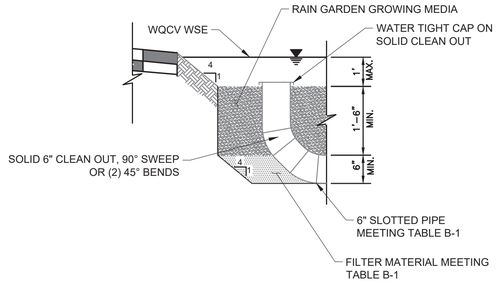

1 / 5.2 TYPICAL BIORETENTION SYSTEM
Scale: NTS

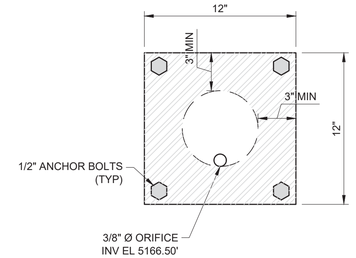

3 ORIFICE PLATE DETAIL
Scale: NTS

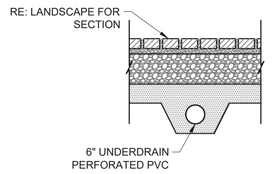

2 / - PICP PAVEMENT SECTION
Scale: NTS

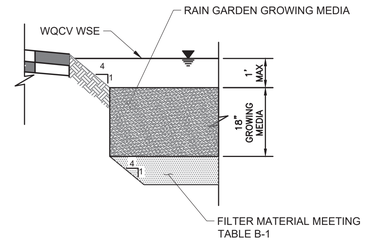

4 RAIN GARDEN DETAIL
Scale: NTS

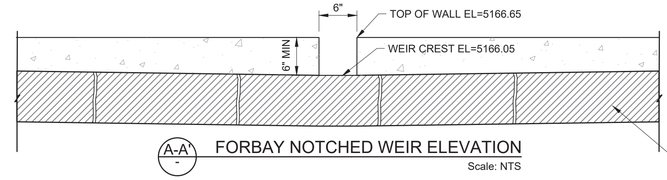

A-A' / - FORBAY NOTCHED WEIR ELEVATION
Scale: NTS

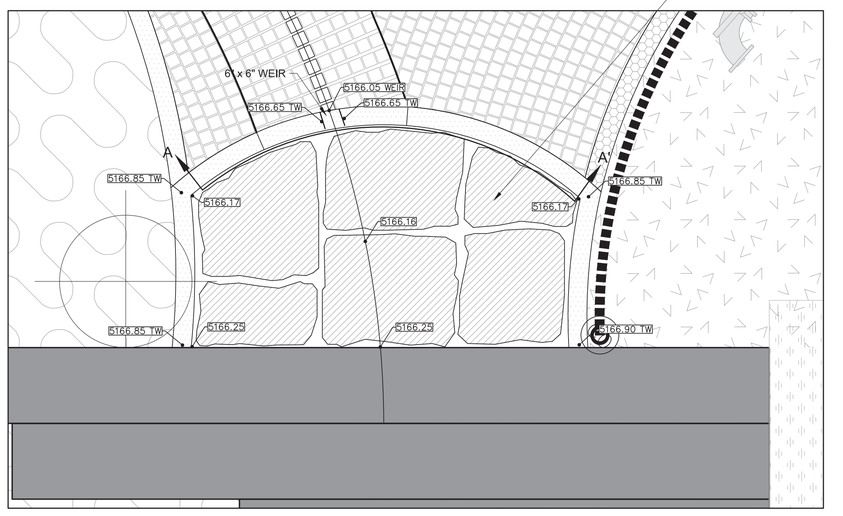

3 / - FOREBAY
Scale: 1" = 2'

811 Know what's below. Call before you dig.

CALL UTILITY NOTIFICATION CENTER OF COLORADO
1-800-922-1987 or 811
CALL 3-BUSINESS DAYS (NOT INCLUDING INITIAL DAY OF CONTACT) IN ADVANCE BEFORE YOU DIG, GRADE, OR EXCAVATE FOR THE MARKING OF UNDERGROUND MEMBER UTILITIES.

ENTITLEMENT AND ENGINEERING SOLUTIONS, INC.
501 S Cherry St
Suite 300
Denver, CO 80246
www.ees-us.com
303-572-7997

wenk ASSOCIATES
PLANNERS & LANDSCAPE ARCHITECTS
303.628.0003

DENVER THE MILE HIGH CITY

RIVER NORTH PARK
DENVER, COLORADO

COLORADO LICENSED PROFESSIONAL ENGINEER
JOSEPH M. ORR
11/19/18
47215

FOR AND ON BEHALF OF EES
NOT VALID WITHOUT ORIGINAL SIGNATURE

KEY PLAN:

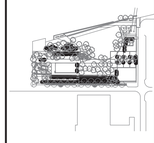

REVISIONS:
NAME DATE

DRAWN BY: JLH
REVIEWED BY: JSP
PROJECT NUMBER: 15014
DATE: **OCTOBER, 2018**
ISSUE: BID SET
SHEET TITLE: STORM SEWER DETAILS
SHEET NUMBER: C5.4

8/21/2015 12:21 PM P:\WENK LARIMO PARK\08 CAD\C5.4 STORM SEWER DETAILS.DWG

© 2017, ALL RIGHTS RESERVED

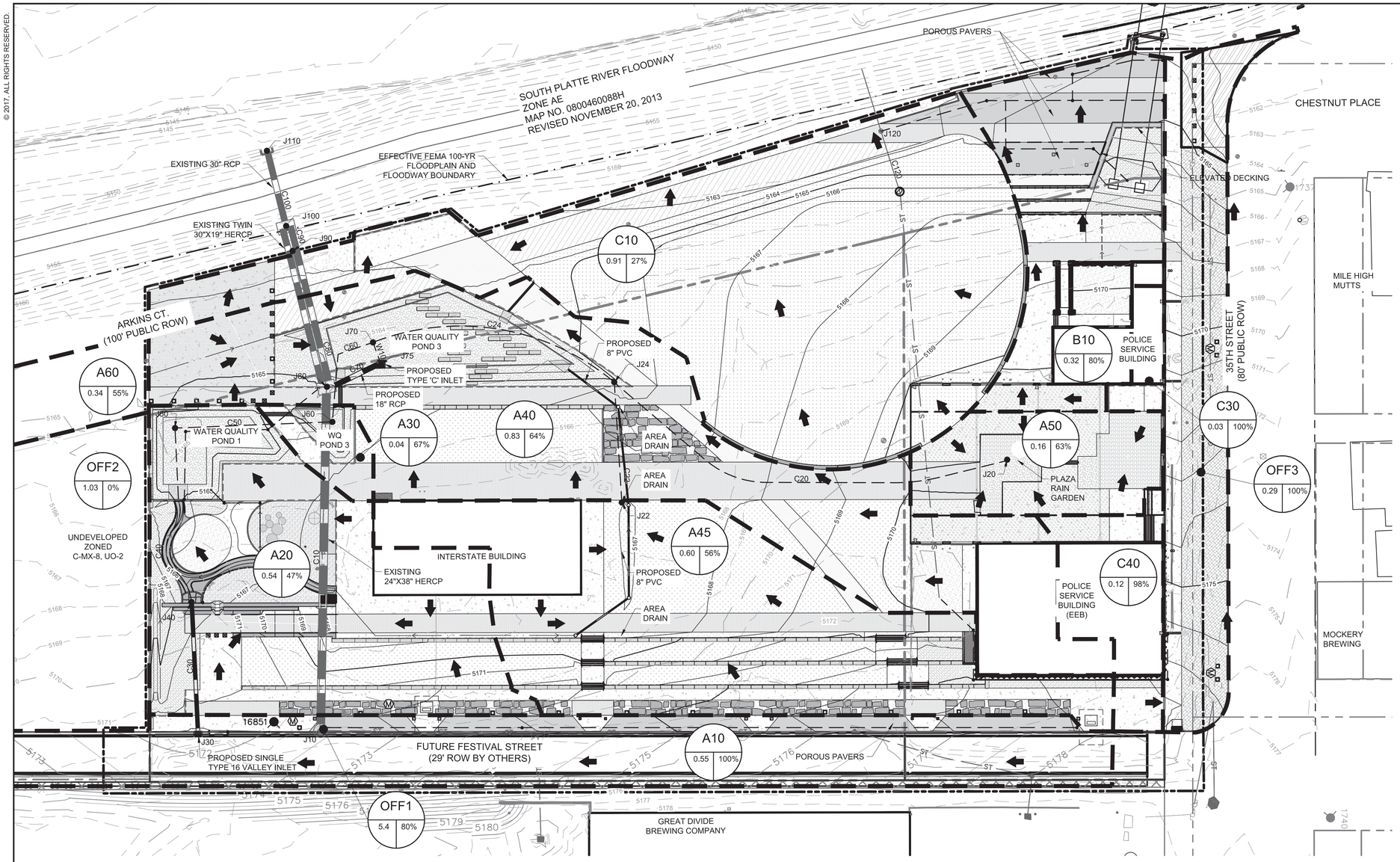

LEGEND

- PROPERTY LINE
- EXISTING CONTOUR
- SS EXISTING SANITARY SEWER
- W EXISTING WATER LINE
- G EXISTING GAS LINE
- ST EXISTING STORM SEWER
- OE EXISTING OVERHEAD ELECTRIC
- EXISTING SANITARY MANHOLE
- EXISTING STORM MANHOLE
- EXISTING FIRE HYDRANT
- EXISTING LIGHT POLE
- EXISTING GAS METER
- EXISTING ELECTRIC METER
- EXISTING CLEANOUT
- EXISTING STORM INLET
- EXISTING POWER POLE
- EXISTING TELECOM MANHOLE
- PROPOSED CONTOUR
- W PROPOSED WATER LINE
- ST PROPOSED STORM SEWER
- SS PROPOSED SANITARY SEWER
- PROPOSED STORM INLET
- PROPOSED STORM MANHOLE
- PROPOSED SANITARY MANHOLE
- PROPOSED WATER METER
- PROPOSED LIGHT POLE
- PROPOSED TREE
- PROPOSED STORM MANHOLE
- PROPOSED STORM PIPE
- PROPOSED STORM INLET
- PROPOSED DRAINAGE BASIN
- FLOW DIRECTION ARROW
- ROOF DRAIN
- J10 SWMM NODE/JUNCTION
- C10 SWMM CONDUIT

A-1 (X.XX | 0.XX)
- BASIN DESIGNATION
- % IMPERVIOSNESS
- BASIN AREA IN ACRES

Table 1						
Overall Pond Summary						
Pond	Pond 1	Pond 2	Pond 3	Plaza RG	PP	Total
SWMM ID	J50	J60	J70	J20	--	-
Contributing Watershed Area, Ac	1.09	0.04	1.77	0.16	0.32	3.38
% Imperviousness	73%	67%	58%	63%	80%	65%
WQCV, cf	912	31	1,180	115	365	2,603
Bottom of Pond El.	5164.15	5164.75	5162.90	5169.50	5162.50	-
WQCV El.	5164.80	5165.00	5163.35	5169.70	5163.00	-
Top of Pond El.	5165.50	5165.30	5164.00	5169.90	5164.00	-
WQCV Depth, ft	0.65	0.25	0.45	0.20	0.50	-
Pond Depth ft	1.35	0.55	1.10	0.40	1.50	-

Table 2			
Conveyance Summary			
Element ID	Description	Watershed Area, ac	100-year, cfs
C10	38"x24" Stm	5.4	33.4
C20	Swale	0.16	0.6
C22	Swale	0.6	3.6
C24	swale	0.76	3.7
C30	18" Stm	0.55	3.8
C40	Swale	0.55	3.7
C50	Pond 1 chase/overflow	1.09	3.4
C60	Pond 2 chase/overflow	1.13	3.5
C65	Concrete Pan	0.34	1.3
C70	23"x14" Pond 3 Outfall	2.9	8.7
C80	2 - 30"x19" Stm	8.3	36.6
C90	2 - 30"x19" Stm	8.3	36.6
C100	30" Stm	8.3	36.6
C120	15" Stm	1.23	4.4
W10	Pond 3 Type C Inlet Weir	2.9	8.7

811 Know what's below. Call before you dig.

CALL UTILITY NOTIFICATION CENTER OF COLORADO
1-800-922-1987 or 811
CALL 3-BUSINESS DAYS (NOT INCLUDING INITIAL DAY OF CONTACT) IN ADVANCE BEFORE YOU DIG, GRADE, OR EXCAVATE FOR THE MARKING OF UNDERGROUND MEMBER UTILITIES.

PROJECT BENCHMARK

BENCHMARK IS CITY AND COUNTY OF DENVER BENCHMARK ELLIS, A 1-½" BRASS CAP LOCATED AT THE NORTHWEST CORNER OF ARKINS COURT AND 36TH STREET ON TOP OF FLASTONE OUTFALL INTO PLATTE RIVER (EAST SIDE) WITH A NAVD88 VERTICAL ELEVATION OF 5162.35.

BASIS OF BEARINGS

BEARINGS ARE BASED ON THE NORTH LINE OF THE NORTHEAST QUARTER (NE¼) OF SECTION 27, TOWNSHIP 3 SOUTH, RANGE 68 WEST OF THE SIXTH PRINCIPAL MERIDIAN BETWEEN THE FOUND 2.5" CAP (LS 33204) AT THE NORTH QUARTER CORNER (N ¼) OF SAID SECTION 27 TOWNSHIP 3 SOUTH, RANGE 68 WEST OF THE SIXTH PRINCIPAL MERIDIAN AND THE FOUND CUT "+" IN STONE AT THE NORTHEAST QUARTER (NE ¼) OF SAID SECTION 27, TOWNSHIP 3 SOUTH, RANGE 68 WEST OF THE SIXTH PRINCIPAL MERIDIAN , WITH AN ASSUMED BEARING OF N89°57'50"W.

EES ENTITLEMENT AND ENGINEERING SOLUTIONS, INC.
501 S Cherry St
Suite 300
Denver, CO 80246
www.ees.us.com
303-572-7997

wenk ASSOCIATES PLANNERS & LANDSCAPE ARCHITECTS 303.628.0003

DENVER THE MILE HIGH CITY

RIVER NORTH PARK
DENVER, COLORADO

COLORADO LICENSED 11/19/18 47215 PROFESSIONAL ENGINEER

FOR AND ON BEHALF OF EES
NOT VALID WITHOUT ORIGINAL SIGNATURE

KEY PLAN:

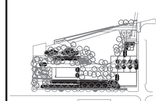

REVISIONS:
NAME DATE

DRAWN BY: JLH

REVIEWED BY: JSP

PROJECT NUMBER: 15014

DATE: **OCTOBER, 2018**

ISSUE: BID SET

SHEET TITLE: DRAINAGE MAP

SHEET NUMBER: C5.5

8/21/2018, 12:21 PM P:\WENK LARIMO PARK\08 CAD\C5.5 DRAINAGE MAP.DWG

© 2017, ALL RIGHTS RESERVED.

RIVER NORTH PARK

WATER IMPROVEMENTS CONSTRUCTION DOCUMENTS
1930 35TH STREET, DENVER, CO

SITUATED IN THE SOUTHEAST QUARTER OF THE SOUTHEAST QUARTER OF SECTION 22 TOWNSHIP 3 SOUTH, RANGE 68 WEST OF THE SIXTH PRINCIPAL MERIDIAN CITY AND COUNTY OF DENVER

STANDARD ABBREVIATIONS:

AC - ASPHALTIC CONCRETE
BCR - BEGINNING OF CURB STATION
BM - BENCHMARK
BW - BOTTOM OF WALL
C&G - CURB AND GUTTER
CL - CENTER LINE
CP - CONTROL POINT
DIA - DIAMETER
DW - DENVER WATER
E - ELECTRIC
EL - ELEVATION
EQ - EQUAL
EX - EXISTING
FF - FINISHED FLOOR
FG - FINISHED GRADE
FH - FIRE HYDRANT
FL - FLOW LINE
G - GAS
GB - GRADE BREAK
HORIZ - HORIZONTAL
HP - HIGH POINT
ID - INSIDE DIAMETER
IN - INCHES
INV - INVERT
IRR - IRRIGATION
JT - JOINT TRENCH
LF - LINEAR FEET
LS - LANDSCAPE
MAX - MAXIMUM
MH - MANHOLE
MIN - MINIMUM
NO - NUMBER
OD - OUTSIDE DIAMETER
PR - PROPOSED
R - RADIUS
RCP - REINFORCED CONCRETE PIPE
ROW - RIGHT OF WAY
RR - RAILROAD
SAN - SANITARY
SF - SQUARE FOOTAGE
STM - STORM
T - TELEPHONE
TC - TOP OF CURB
TF - TOP OF FOOTING
TG - TOP OF GRATE
TW - TOP OF WALL
TEMP - TEMPORARY
TYP - TYPICAL
VERT - VERTICAL
W - WATER
W/ - WITH

LEGEND

PROPOSED EASEMENT
EXISTING RIGHT-OF-WAY (ROW)
EXISTING BUILDING
EXISTING STORM LINE
EXISTING ELECTRICAL LINE
EXISTING SANITARY LINE
EXISTING UNDERGROUND TELEPHONE LINE
EXISTING GAS LINE
EXISTING FIBER OPTIC LINE
EXISTING OVERHEAD ELECTRIC LINE
EXISTING CATV LINE
EXISTING FIRE LINE
EXISTING 6" WATER LINE
EXISTING 8" WATER LINE
EXISTING 12" WATER LINE
EXISTING 16" WATER LINE
EXISTING CONDUIT
EXISTING DOMESTIC WATER LINE
EXISTING FIRE HYDRANT LINE
PROPOSED FIRE HYDRANT LINE
PROPOSED IRRIGATION LINE
PROPOSED DOMESTIC LINE
PROPOSED 8" WATER LINE
PROPOSED SITE FEATURE (OTHER)
PROPOSED FIRE LINE
EXISTING SITE FEATURE (OTHER)
EXISTING FIRE HYDRANT
PROPOSED FIRE HYDRANT
PROPOSED WATER METER
PROPOSED GATE VALVE
PROPOSED CURB STOP
PROPOSED CORP STOP
PROPOSED REDUCER
EXISTING OPEN GATE VALVE
EXISTING FIRE DEPARTMENT CONNECTION
EXISTING SANITARY MANHOLE
EXISTING STORM MANHOLE
PROPOSED STORM INLET
EXISTING METER IN MANHOLE
EXISTING WATER MANHOLE
PROPOSED DC BACKFLOW PREVENTER
PROPOSED RP BACKFLOW PREVENTER
PROPOSED TEE
PROPOSED PLUG
PROPOSED ASPHALT
PROPOSED CONCRETE
PROPOSED CONCRETE UNIT PAVING

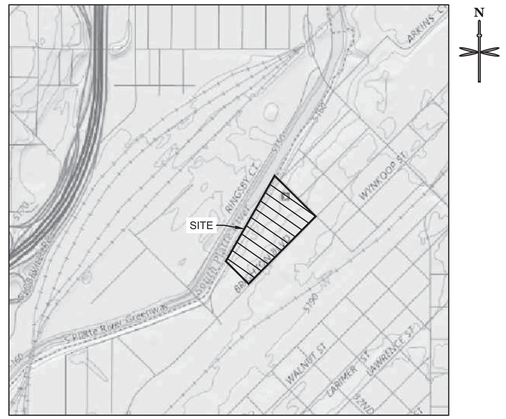

VICINITY MAP
1"= 500'

MATERIALS LIST

DESCRIPTION	QTY	UNIT
6" D.I. PIPE	277	LF
6" X 6" SS TAPPING SLEEVE W/ 6" TAPPING VALVE	2	EA
8" X 6" SWIVEL TEE	1	EA
6" GATE VALVE	7	EA
8" D.I. PIPE	592	LF
6" X 8" REDUCER	1	EA
8" GATE VALVE	2	EA
8" X 6" SWIVEL TEE	2	EA
2" TEMPORARY BLOWOFF	1	EA
1" TYPE K COPPER PIPE	89	LF
1" WATER METER	1	EA
1" CURB STOP	1	EA
1 1/2" TYPE K COPPER PIPE	113	
1 1/2" WATER METER	2	EA
1 1/2" CURB STOP	2	EA
2" TYPE K COPPER PIPE	25	LF
2" WATER METER	1	EA
2" CURB STOP	1	EA
RP BACKFLOW PREVENTER	3	EA
DC BACKFLOW PREVENTER	3	EA
FIRE HYDRANT	1	EA

SHEET INDEX

DRAWING NO	DESCRIPTION	SHEET NO.
C6.0	WATER COVER SHEET	1
C6.1	WATER LINE NOTES & DETAILS	2
C6.2	WATER ONLY PLAN	3
C6.3	OVERALL UTILITY PLAN	4

BASIS OF BEARINGS

BEARINGS ARE BASED ON THE NORTH LINE OF THE NORTHEAST QUARTER (NE¼) OF SECTION 27, TOWNSHIP 3 SOUTH, RANGE 68 WEST OF THE SIXTH PRINCIPAL MERIDIAN BETWEEN THE FOUND 2.5" CAP (LS 33204) AT THE NORTH QUARTER CORNER (N ¼) OF SAID SECTION 27 TOWNSHIP 3 SOUTH, RANGE 68 WEST OF THE SIXTH PRINCIPAL MERIDIAN AND THE FOUND CUT "+" IN STONE AT THE NORTHEAST QUARTER (NE ¼) OF SAID SECTION 27, TOWNSHIP 3 SOUTH, RANGE 68 WEST OF THE SIXTH PRINCIPAL MERIDIAN , WITH AN ASSUMED BEARING OF N89°57'50"W.

PROJECT BENCHMARK

BENCHMARK IS CITY AND COUNTY OF DENVER BENCHMARK ELLIS, A 1-½" BRASS CAP LOCATED AT THE NORTHWEST CORNER OF ARKINS COURT AND 36TH STREET ON TOP OF FLASTONE OUTFALL INTO PLATTE RIVER (EAST SIDE) WITH A NAVD88 VERTICAL ELEVATION OF 5162.35.

811 Know what's below. Call before you dig.
CALL UTILITY NOTIFICATION CENTER OF COLORADO
1-800-922-1987 or 811
CALL 3-BUSINESS DAYS (NOT INCLUDING INITIAL DAY OF CONTACT) IN ADVANCE BEFORE YOU DIG, GRADE, OR EXCAVATE FOR THE MARKING OF UNDERGROUND MEMBER UTILITIES.

ENGINEER'S CERTIFICATION

THESE CONSTRUCTION DRAWINGS FOR THE RIVER NORTH PARK WATER IMPROVEMENT CONSTRUCTION DOCUMENTS HAVE BEEN PREPARED BY ME (OR UNDER MY DIRECT SUPERVISION) IN ACCORDANCE WITH THE REQUIREMENTS OF THE DENVER WATER DEPARTMENT.

JAY S. PETERS, LICENSED PROFESSIONAL ENGINEER
STATE OF COLORADO PE NO. 35068

DENVER FIRE DEPARTMENT APPROVAL

ALL FIRE HYDRANTS SHALL BE INSTALLED IN ACCORDANCE WITH THE REQUIREMENTS OF THE DENVER WATER DEPARTMENT. THE NUMBER AND LOCATION(S) OF THE FIRE HYDRANT(S) AND FIRE FLOW AS SHOWN ON THIS WATER MAIN INSTALLATION IS CORRECT AS SPECIFIED BY THE DENVER FIRE DEPARTMENT.

SIGNATURE OF FIRE CHIEF OR DESIGNATED REPRESENTATIVE

DATE SIGNED

1930 35TH (EEB SOUTH)

DENVER FIRE FLOW DATA BLOCK

TOTAL FIRE FLOW REQUIRED FOR THIS SITE IS 1,500 GPM MINIMUM @ 20 PSI RESIDUAL PRESSURE

THIS FLOW MUST BE PROVIDED FROM A MINIMUM OF 1 FIRE HYDRANTS. INDIVIDUALLY, EACH FIRE HYDRANT MUST SUPPLY 1500 GPM MINIMUM @ 20 PSI RESIDUAL PRESSURE.

CODE USED FOR ANALYSIS: 2015 IFC WITH 2016 AMENDMENTS
OCCUPANCY GROUP(S): A
CONSTRUCTION TYPE(S): V-B
FIRE FLOW CALCULATION AREA: 6,780 sq ft
THIS BUILDING IS FULLY SPRINKLERED

1940 35TH ST (EEB NORTH)

DENVER FIRE FLOW DATA BLOCK

TOTAL FIRE FLOW REQUIRED FOR THIS SITE IS 1,500 GPM MINIMUM @ 20 PSI RESIDUAL PRESSURE

THIS FLOW MUST BE PROVIDED FROM A MINIMUM OF 1 FIRE HYDRANTS. INDIVIDUALLY, EACH FIRE HYDRANT MUST SUPPLY 1500 GPM MINIMUM @ 20 PSI RESIDUAL PRESSURE.

CODE USED FOR ANALYSIS: 2015 IFC WITH 2016 AMENDMENTS
OCCUPANCY GROUP(S): A
CONSTRUCTION TYPE(S): V-B
FIRE FLOW CALCULATION AREA: 2,350 sq ft
THIS BUILDING IS FULLY SPRINKLERED

3400 ARKINS CT (INTERSTATE)

DENVER FIRE FLOW DATA BLOCK

TOTAL FIRE FLOW REQUIRED FOR THIS SITE IS 1,500 GPM MINIMUM @ 20 PSI RESIDUAL PRESSURE

THIS FLOW MUST BE PROVIDED FROM A MINIMUM OF 1 FIRE HYDRANTS. INDIVIDUALLY, EACH FIRE HYDRANT MUST SUPPLY 1500 GPM MINIMUM @ 20 PSI RESIDUAL PRESSURE.

CODE USED FOR ANALYSIS: 2015 IFC WITH 2016 AMENDMENTS
OCCUPANCY GROUP(S): A
CONSTRUCTION TYPE(S): V-B
FIRE FLOW CALCULATION AREA: 5,400 sq ft
THIS BUILDING IS FULLY SPRINKLERED

EES ENTITLEMENT AND ENGINEERING SOLUTIONS, INC.
501 S Cherry St
Suite 300
Denver, CO 80246
www.ees.us.com
303-572-7997

wenk ASSOCIATES
PLANNERS & LANDSCAPE ARCHITECTS
303.628.0003

DENVER THE MILE HIGH CITY

RIVER NORTH PARK
DENVER, COLORADO

COLORADO LICENSED PROFESSIONAL ENGINEER
JAY S. PETERS
11/19/18
47215

FOR AND ON BEHALF OF EES
NOT VALID WITHOUT ORIGINAL SIGNATURE

KEY PLAN:

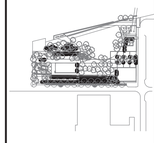

REVISIONS:
NAME DATE

DRAWN BY: JLH
REVIEWED BY: JSP
PROJECT NUMBER: 15014
DATE: **OCTOBER, 2018**
ISSUE: BID SET
SHEET TITLE: WATER COVER SHEET
SHEET NUMBER: C6.0

8/21/2015 12:21 PM P:\WENK LARIMO PARK\08 CAD\C6.0 WATER COVER SHEET.DWG

© 2017, ALL RIGHTS RESERVED.

GENERAL CONSTRUCTION AND WATER NOTES: MAIN EXTENSION NOTES:

1. PROJECTS LOCATED IN DISTRIBUTOR CONTRACT AREAS, SHALL REQUIRE THE DISTRICT TO CONTACT DENVER WATER PRIOR TO THE PRE-CONSTRUCTION MEETING.
2. ALL MATERIALS AND WORKMANSHIP SHALL BE IN CONFORMANCE WITH DENVER WATER'S ENGINEERING STANDARDS, MATERIALS SPECIFICATIONS, AND DRAWINGS. ALL MAIN INSTALLATIONS/SYSTEM MODIFICATIONS WILL BE APPROVED AND INSPECTED BY DENVER WATER. FIELD CHANGE DIRECTIVES MADE BY DISTRIBUTION INSPECTION SHALL BE MADE WITHIN 24 HOURS BY THE CONTRACTOR.
3. CONTRACTORS SHALL MAINTAIN A COPY OF THE CURRENT ENGINEERING STANDARDS ON-SITE AT ALL TIMES DURING CONSTRUCTION. SEE THE CHART BELOW FOR A QUICK REFERENCE TO THE FREQUENTLY USED MATERIAL SPECIFICATIONS.
4. CONTRACTORS SHALL MAINTAIN A COPY OF THE CURRENT ENGINEERING STANDARDS ON SITE AT ALL TIMES DURING CONSTRUCTION.

MATERIAL SPECIFICATION QUICK REFERENCES:

MATERIAL SPECIFICATION	DESCRIPTION
MS 01	DUCTILE IRON PIPE
MS 02	POLYVINYL CHLORIDE PRESSURE PIPE
MS 03	DUCTILE IRON WATERWORKS FITTINGS
MS 5	RESILIENT SEATED GATE VALVES
MS 6	FLANGED RUBBER SEATED BUTTERFLY VALVES
MS 8	TAPPING VALVES MECHANICAL JOINT TYPE
MS 9	FABRICATED CARBON STEEL AND STAINLESS STEEL TAPPING SLEEVES
MS 12	CAST IRON VALVE BOXES
MS 13	DRY BARREL FIRE HYDRANTS
MS 14	POLYETHYLENE ENCASEMENT MATERIAL
MS 23	BRASS AND BRONZE GOODS
MS 29	MECHANICAL JOINT RESTRAINT
MS 30	BOLTED SLEEVE-TYPE COUPLINGS
MS 36	FLANGED JOINT ACCESSORIES

5. AWG 12 SOLID COPPER WIRE SHALL BE INSTALLED ON ALL NON-METALLIC WATER MAINS.
6. THE DEPTH OF COVER OVER THE PIPE, MEASURED FROM OFFICIAL STREET GRADE TO THE TOP OF THE PIPE, SHALL BE A MINIMUM OF 4-1/2 FEET AND SHALL BE KNOWN AS THE *COVER OVER THE PIPE*. IF DIFFICULTIES ARISE WHEN CROSSING INTERFERENCE, AND WHERE SPECIFICALLY APPROVED BY DENVER WATER, DEVIATIONS FROM 4-1/2 FEET OF COVER WILL BE PERMITTED. THE COVER OVER THE PIPE SHALL BE A MINIMUM OF 4-1/2 FEET AND A MAXIMUM OF 10 FEET WITH DENVER WATER APPROVAL.
7. ANY CHANGES IN ALIGNMENT AND GRADE SHALL BE AUTHORIZED BY DENVER WATER AND SHALL BE ACCOMPLISHED BY THE INSTALLATION OF ADDITIONAL FITTINGS. THE DEFLECTION OF JOINTS IS PERMITTED ONLY WHEN INSTALLING PIPE ON HORIZONTAL OR VERTICAL CURVES.
8. PRIOR TO THE INSTALLATION OF WATER MAINS, ROAD CONSTRUCTION MUST HAVE PROGRESSED TO AT LEAST THE SUB-GRADE STATE. SUB-GRADE IS DEFINED AS AN ELEVATION OF NO MORE THAN 7 INCHES BELOW THE FINISHED STREET GRADE.
9. THE CONTRACTOR SHALL ADJUST ALL VALVE BOXES AND FIRE HYDRANTS TO THE FINAL FINISHED GRADE.
10. BENDS, TEES, FIRE HYDRANTS, BLOW-OFFS, AND PLUGS AT DEAD-END MAINS SHALL BE PROTECTED FROM THRUST WITH MECHANICAL RESTRAINT AND CONCRETE KICK BLOCKS IN ACCORDANCE WITH DENVER WATER'S ENGINEERING STANDARDS.
11. VALVES SHALL BE LOCATED ON PROPERTY LINE EXTENSIONS, EXCEPT FOR TAPPING TEES WHERE AN ADDITIONAL VALVE SHALL BE PLACED ON THE TAPPING TEE. OTHER VALVE LOCATIONS MAY BE REQUIRED AS SHOWN ON THE PLANS.
12. UTILITY CROSSINGS SHALL MAINTAIN A MINIMUM CLEARANCE OF 18-INCHES BETWEEN THE OUTSIDE OF THE PIPES.
13. ONLY ONE POINT OF CONNECTION IS ALLOWED UNTIL THE TESTING OF THE NEW MAIN INSTALLATIONS IS COMPLETE.
14. NEWLY INSTALLED WATER MAINS AND FIRE SERVICE LINES SHALL BE HYDROSTATICALLY TESTED IN ACCORDANCE WITH DENVER WATER ENGINEERING STANDARDS, SECTION 8.25.
15. THE TRENCH SHALL BE EXCAVATED AND THE PIPE EXPOSED FOR INSPECTION AT ANY LOCATION ON THE PROJECT, WHEN REQUESTED BY DENVER WATER.
16. THE STERILIZATION AND FLUSHING OF MAINS SHALL BE INSPECTED AND CERTIFIED BY THE HEALTH DEPARTMENT HAVING JURISDICTION; ONE COPY OF THE CERTIFICATION SHALL BE PROVIDED TO DENVER WATER. THE CERTIFICATION SHALL NOTE THE LOCATION OF THE MAIN AND STATE THE MAIN HAS BEEN INSPECTED BY A REPRESENTATIVE OF THE HEALTH DEPARTMENT HAVING JURISDICTION AND COMPLIES WITH THE PROCEDURES SET FORTH BY THAT DEPARTMENT.
17. THE CONTRACTOR IS RESPONSIBLE FOR:
    a. NOTIFYING CUSTOMERS VERBALLY/WRITTEN WHO MAY BE AFFECTED BY A WATER OUTAGE DURING CONSTRUCTION.
    b. OBTAINING, AT THE CONTRACTOR'S EXPENSE, APPLICABLE LICENSES, PERMITS, BONDS, ETC., THAT ARE REQUIRED FOR THE MAIN INSTALLATION/SYSTEM MODIFICATION.
    c. CONTACT DENVER WATER'S CONSTRUCTION ENGINEERING PERSONNEL FOR THE PRE-CONSTRUCTION MEETING AND INSPECTION, 303-628-6671, AT LEAST 48 HOURS PRIOR TO BEGINNING CONSTRUCTION.
    d. IN THE EVENT OF AN EMERGENCY IN DENVER OR IN A TOTAL SERVICE AREA AFTER WORKING HOURS, CALL DENVER WATER'S WESTSIDE DISPATCHER: 303-628-6801. IN A MASTER METER OR READ & BILL DISTRICT, PLEASE CONTACT THE REPRESENTATIVE OF THE DISTRICT IN WHICH THE PROJECT IS TAKING PLACE.
    e. PAYING ALL ADDITIONAL CHARGES FOR INSPECTION OUTSIDE NORMAL WORK HOURS.

    NOTE: BE ADVISED THAT ON OCCASION VALVES IN OUR SYSTEM MAY BE INOPERABLE. ON SUCH OCCASIONS, IT MAY BECOME NECESSARY TO BACK UP AN ADDITIONAL BLOCK FOR THE SHUT OUT. IF THAT OCCURS, MAKE ADDITIONAL NOTIFICATIONS VERBALLY/WRITTEN TO CUSTOMERS WITH THE MANDATORY 24 HOURS ADVANCE NOTICE. WHEN VALVE MAINTENANCE IS REQUIRED, A DELAY OF SEVERAL DAYS SHOULD BE EXPECTED.

TAP AND METER NOTES (FOR DENVER, TOTAL SERVICE, AND READ AND BILL AREAS ONLY. IN MASTER METER DISTRICTS PLEASE REFER TO THE SPECIFICATION FOR THAT DISTRICT).

1. BEFORE ANY TAPS ARE MADE ON MAINS, TAP APPLICATIONS MUST BE RECEIVED AND APPROVED BY THE DISTRIBUTOR AND DENVER WATER.
2. DENVER WATER WILL MAKE ALL TAPS THAT ARE 2 INCHES AND SMALLER.
3. INDIVIDUAL SERVICE LINE PRVS ARE REQUIRED WHEN AREA PRESSURE EXCEEDS 80 PSI.
4. SERVICES AND METERS:
    a. THE CONTRACTOR SHALL HOLD AN ON-SITE PRE-CONSTRUCTION CONFERENCE WITH THE METER INSPECTOR FOR ALL TAPS, SERVICE LINES, AND METERS LARGER THAN ONE-INCH, AND FOR PROJECTS INVOLVING MORE THAN ONE TAP AND SERVICE. TO SCHEDULE A PRE-CONSTRUCTION CONFERENCE CALL METER INSPECTION AT 303-628-6145.
    b. A COPY OF THE APPROVED PLANS WITH DENVER WATER'S APPROVAL STICKER MUST BE PRESENT ON-SITE AT THE TIME THE TAP IS MADE AND THE METER IS INSPECTED OR INSTALLED.
    c. PRIOR TO THE TAP BEING MADE, THE SERVICE ADDRESS SHALL BE POSTED, AND THE CURB VALVE, METER YOKE, AND METER PIT/VAULT SHALL BE INSTALLED. UPON TAP INSTALLATION, THE CONTRACTOR MAY REQUEST THE METER INSPECTION AFTER THE FIRST POUR OF CONCRETE FOUNDATION HAS OCCURRED. THE SERVICE ADDRESS SHALL REMAIN POSTED UNTIL THE METER SETTING PASSES INSPECTION.
    d. METERS CANNOT BE SET, INSPECTED, OR SERVICES ACTIVATED, UNTIL THE REQUIREMENTS FOR BACKFLOW PREVENTION HAVE BEEN COMPLETED. CONTACT THE BACKFLOW PREVENTION PROGRAM PERSONNEL AT 303-628-5969 FOR FURTHER INFORMATION.
    e. METER PITS AND VAULTS MUST BE SET FLUSH WITH THE FINAL GRADE OF THE LANDSCAPE, INCLUDING THE PROPER DEPTH FOR SOIL AMENDMENT. IF FINAL GRADING HAS NOT BEEN COMPLETED AT THE TIME OF METER INSPECTION, THE OWNER WILL BE REQUIRED TO RAISE OR LOWER THE METER PIT/VAULT WHEN FINAL GRADE IS ESTABLISHED. ADJUSTMENT OF THE PIT MAY REQUIRE ADJUSTMENT OF THE METER SETTING WITHIN THE PIT.
    f. METER SETTING, VALVES, AND SERVICE LINES FROM THE MAIN TO THE BACKFLOW PREVENTER ASSEMBLY, IF PRESENT, OR TO 5 FEET AFTER THE METER VAULT, MUST MEET ALL APPLICABLE ENGINEERING STANDARDS IN EFFECT AT THE TIME OF ACTIVATION. MODIFICATIONS MAY BE REQUIRED FROM THE DETAILS ON THESE PLANS TO COMPLY WITH THE CURRENT ENGINEERING STANDARDS.
    g. NO PRESENT OR FUTURE FENCES OR WALLS ARE PERMITTED BETWEEN THE RIGHT-OF-WAY (ROW) OR EASEMENT AND THE METER SETTING. THERE SHALL BE NO PERMANENT OBSTRUCTIONS WITHIN 5 FEET OF THE OUTSIDE WALL OF THE METER PIT OR VAULT.
    h. INSIDE THE CITY OF DENVER, ALL MULTI-FAMILY DWELLINGS WITH A SINGLE TAP, SERVICE LINE, AND METER ARE REQUIRED TO SUB-METER EACH INDIVIDUAL UNIT (SEC 401.3.2 OF DENVER MODIFICATIONS TO THE INTERNATIONAL PLUMBING CODE, ORDINANCE NUMBER 576, SERIES OF 2004). CALL THE CITY AND COUNTY OF DENVER PLUMBING INSPECTOR FOR INFORMATION AT 720-865-2625.
    i. INSIDE THE CITY OF DENVER, ALL SERVICE LINES MUST BE INSTALLED TO AVOID EXISTING OR PROPOSED STREET TREES. CONTACT THE CITY AND COUNTY OF DENVER'S FORESTER AT 720-913-0647 FOR INFORMATION.

CROSS-CONNECTION CONTROL REQUIREMENTS:

THE LICENSEES LISTED BELOW SHALL BE IN CONFORMANCE WITH DENVER WATER'S ENGINEERING STANDARDS, CHAPTER 5.05, *CROSS-CONNECTION CONTROL AND BACKFLOW PREVENTION*. BACKFLOW PREVENTION ASSEMBLIES ARE REQUIRED TO BE INSTALLED ON THE FOLLOWING WATER SERVICE LINES:

1. COMMERCIAL DOMESTIC SERVICE LINES
2. MULTI-FAMILY DOMESTIC SERVICE LINES (DEPENDING ON POTENTIAL HAZARD)
3. FIRE SERVICE LINES
4. IRRIGATION SERVICE LINES
5. SINGLE FAMILY RESIDENTIAL DOMESTIC SERVICE LINES WITH AN AUXILIARY WATER SOURCE (DUAL WATER SERVICE AGREEMENT REQUIRED)
6. RECYCLED WATER SERVICE LINES, IF SYSTEM DESIGN INCLUDES CHEMICAL INJECTION OR PUMPS.
    a. BACKFLOW PREVENTION ASSEMBLIES INSTALLED ON RECYCLED WATER SERVICE LINES SHALL BE IDENTIFIED AS "RECYCLED WATER".
7. IT IS AT THE SOLE DISCRETION OF DENVER WATER'S CROSS-CONNECTION CONTROL SECTION TO APPROVE OR DENY A VARIANCE REQUEST RELATED TO A PROPOSED BACKFLOW PREVENTION ASSEMBLY INSTALLATION.
    a. BACKFLOW PREVENTION ASSEMBLIES SHALL BE A MODEL MANUFACTURED IN ACCORDANCE WITH AWWA C510 AND C511 AND SHALL HAVE MET THE SPECIFICATIONS BY THE UNIVERSITY OF SOUTHERN CALIFORNIA FOUNDATION FOR CROSS-CONNECTION CONTROL AND HYDRAULIC RESEARCH.
    b. THE LICENSEE IS REQUIRED TO HAVE A CERTIFIED AMERICAN BACKFLOW PREVENTION ASSOCIATION (ABPA) OR AMERICAN SOCIETY OF SANITARY ENGINEERING (ASSE) TESTER INSPECT AND TEST THE EXISTING AND/OR NEWLY INSTALLED CONTAINMENT BACKFLOW PREVENTION ASSEMBLIES ON DEDICATED DOMESTIC, IRRIGATION, FIRE AND RECYCLE WATER SERVICE LINES UPON INSTALLATION AND ANNUALLY THEREAFTER.
    c. WITHIN 48 HOURS OF DENVER WATER SETTING THE METER AND TURNING ON THE WATER SERVICE, THE ABPA OR ASSE TESTER IS REQUIRED TO SUBMIT THE CONTAINMENT BACKFLOW ASSEMBLY TEST REPORT(S) TO THE CROSS-CONNECTION CONTROL OFFICE:

        FAX: 303-794-8325
        E-MAIL: CROSSCONNECTIONCONTROL@DENVERWATER.ORG

    d. THERE SHALL BE NO UNPROTECTED TAKEOFFS FROM THE SERVICE LINE AHEAD OF ANY METER OR BACKFLOW PREVENTION ASSEMBLY LOCATED AT THE POINT OF DELIVERY TO THE CUSTOMER'S WATER SYSTEM.
    e. NO BRANCH LINE OR TAPS ARE ALLOWED ON DEDICATED IRRIGATION WATER SERVICE LINES OR RECYCLED WATER SERVICE LINE FOR DOMESTIC (POTABLE) USE (E.G., DRINKING FOUNTAINS, WATER PLAY FEATURES, SWIMMING POOL, RESTROOM FACILITIES, ETC.)

EES
ENTITLEMENT AND ENGINEERING SOLUTIONS, INC.
501 S Cherry St
Suite 300
Denver, CO 80246
www.ees.us.com
303-572-7997

wenk
ASSOCIATES
PLANNERS & LANDSCAPE ARCHITECTS
303.628.0003

DENVER
THE MILE HIGH CITY

RIVER NORTH PARK
DENVER, COLORADO

COLORADO LICENSED PROFESSIONAL ENGINEER
CRYSTAL M. ORPINEDA
11/19/18
47215

FOR AND ON BEHALF OF EES
NOT VALID WITHOUT ORIGINAL SIGNATURE

KEY PLAN:

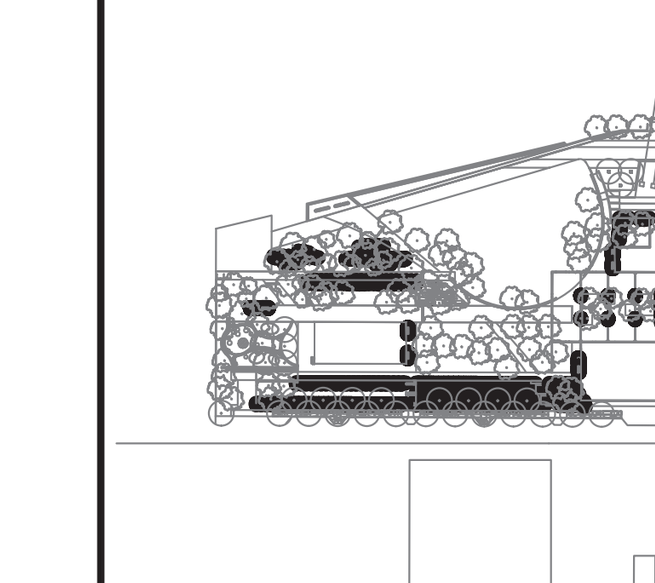

REVISIONS:
NAME DATE

DRAWN BY: JLH
REVIEWED BY: JSP
PROJECT NUMBER: 15014
DATE: **OCTOBER, 2018**
ISSUE: BID SET
SHEET TITLE: WATER LINE NOTES & DETAILS
SHEET NUMBER: C6.1

8/21/2015 12:21 PM P:\WENK LA\RINO PARK\08 CAD\C6.1 WATER LINE NOTES & DETAILS.DWG

© 2017, ALL RIGHTS RESERVED.

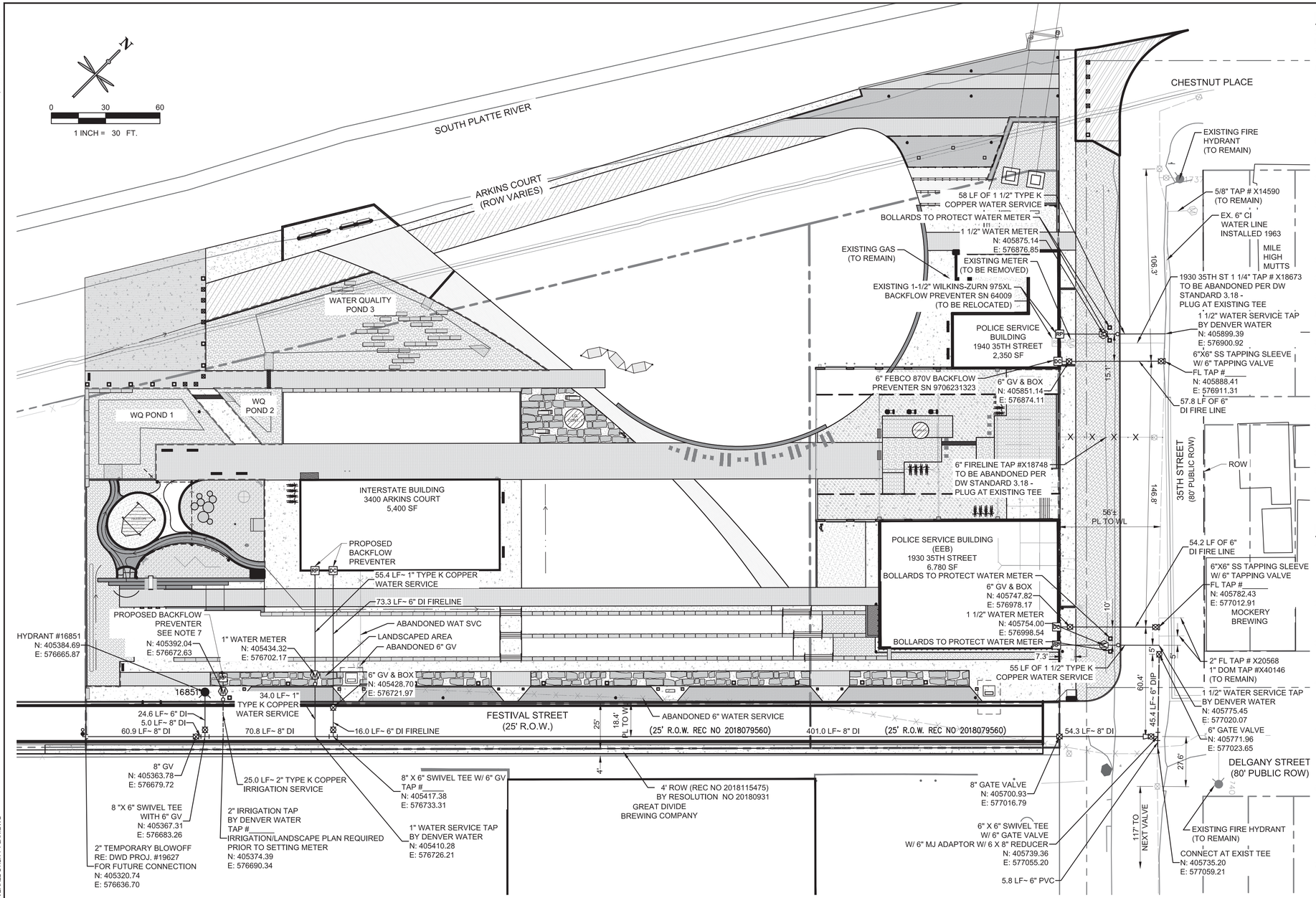

8/21/2015 12:21 PM P:\WENK LARIMO PARK\08 CAD\C6.2 OVERALL UTILITY PLAN.DWG

811 Know what's **below.** **Call** before you dig.

CALL UTILITY NOTIFICATION
CENTER OF COLORADO
1-800-922-1987 or 811
CALL 3-BUSINESS DAYS (NOT INCLUDING INITIAL DAY OF CONTACT) IN ADVANCE BEFORE YOU DIG, GRADE, OR EXCAVATE FOR THE MARKING OF UNDERGROUND MEMBER UTILITIES.

DENVER WATER STANDARD DETAILS

STANDARD DETAILS INCORPORATED BY REFERENCE WITHIN THESE DRAWINGS SHALL CONSIST OF THE FOLLOWING STANDARD DETAILS WHICH MAY BE REFERENCED THEREIN:

SHEET 07 - PIPING AT STREET INTERSECTIONS FOR FUTURE CONNECTIONS

SHEET 08 - TYPICAL TRENCH SECTION

SHEET 10 - PLAN, PROFILE, AND LOCATION FOR FIRE HYDRANTS, MAINS, AND VALVES

SHEET 11 - TRACER WIRE INSTALLATION FOR PVC WATER MAIN

SHEET 14 - STORM AND SANITARY SEWER CROSSING

SHEET 15 - OPEN CUT CROSSING OVER OR UNDER CONDUIT OR CONFLICTING UTILITY

SHEET 18 - CONCRETE KICKBLOCKS BEARING SURFACES AND INSTALLATION

SHEET 19 - CONCRETE KICKBLOCK REQUIREMENTS FOR WATER MAIN AND TAP SIZE COMBOS

SHEET 21 - LENGTH OF RESTRAINED PIPE

SHEET 22 - NON-INSULATED FLANGE LUG

SHEET 23 - INSULATED FLANGE LUG

SHEET 38 - TEMPORARY BLOWOFF INSTALLATION FOR 12" & SMALLER MAINS

SHEET 46 - GENERAL METER & SERVICE NOTES

SHEET 47 - 3" AND LARGER DOMESTIC AND FIRELINE CONNECTIONS

SHEET 50 - 3/4" & 1" SERVICE LINE, STOP BOX, AND OUTSIDE METER INSTALLATION

SHEET 55 - OUTSIDE SETTING FOR ¾" & 1" METER

SHEET 63 - OUTSIDE SETTING FOR 1½" AND 2" METER AND BYPASS IN MANHOLE W/ INSIDE BACKFLOW PREVENTION ASSEMBLY

SHEET 73 - TRAFFIC IMPEDIMENT BOLLARD

SHEET 79 - POLYETHYLENE WRAP ON PIPE AND AT TAP INSTALLATION

SHEET 81 - DUCTILE IRON PIPE JOINT BONDING

NOTES:

1. EXISTING UTILITIES WERE COMPILED USING THE BEST AVAILABLE INFORMATION AND FIELD OBSERVATIONS. EES DOES NOT GUARANTEE THE LOCATION OF UNDERGROUND UTILITIES SHOWN HEREON. CONTRACTOR TO VERIFY UTILITY HORIZONTAL AND VERTICAL LOCATION PRIOR TO CONSTRUCTION.
2. GATE VALVES ARE NOT SURVEYED AND SHOW APPROXIMATE LOCATION BASED ON DENVER WATER MAPS. CONTRACTOR TO VERIFY LOCATION.
3. ANY BACKFLOW PREVENTION DEVICE INSTALLED ON A TAP WHICH IS TO BE ABANDONED, SHALL NOT BE RELOCATED PRIOR TO APPROVAL FROM DENVER WATER.
4. ALL FIRE LINES MUST BE EQUIPPED WITH AN APPROVED USC FCCCHR DOUBLE CHECK VALVE BACKFLOW PREVENTION ASSEMBLY (DC), INSTALLED IMMEDIATELY UPON ENTRY INTO HEATED PORTION OF BUILDING, AT A MAXIMUM DISTANCE OF 5' FROM WALL OR FLOOR.
5. ALL FIRE LINES WITH CHEMICAL EXTINGUISHING AGENTS OR CONTAINING ANTIFREEZE SOLUTIONS MUST BE EQUIPPED WITH A REDUCED PRESSURE (RP) BACKFLOW PREVENTION ASSEMBLY (DENVER WATER ENGINEERING STANDARD, CHAPTER 5, SECTION 5.05).
6. ALL DOMESTIC SERVICE LINES MUST BE EQUIPPED WITH AN APPROVED USC FCCCHR REDUCED PRESSURE (RP) BACKFLOW PREVENTION ASSEMBLY, INSTALLED A MAXIMUM OF 5' DOWNSTREAM FROM METER PIT OR IMMEDIATELY UPON ENTRY INTO HEATED PORTION OF BUILDING, AT A MAXIMUM DISTANCE OF 5' FROM WALL OR FLOOR (DENVER WATER ENGINEERING STANDARD, CHAPTER 5, SECTION 5.05).
7. APPROVED REDUCED PRESSURE (PR) BACKFLOW PREVENTION ASSEMBLY ON IRRIGATION LINE IN LANDSCAPED AREA. A USC APPROVED REDUCED PRESSURE (RP) BACKFLOW PREVENTION ASSEMBLY IS REQUIRED ON THE IRRIGATION POINT OF CONNECTION AND SHOULD BE LOCATED 5' DOWNSTREAM FROM THE METER OR IMMEDIATELY DOWNSTREAM FROM DOMESTIC SERVICE BACKFLOW PREVENTION ASSEMBLY IN THE BUILDING.
8. DENVER WATER (WQO SYSTEM DEVELOPMENT) TO CONDUCT DISINFECTION AND HYDROSTATIC PRESSURE TESTING OF THE WATER MAIN AND ASSOCIATED HYDRANT BRANCHES. PLEASE CONTACT SYSTEM DEVELOPMENT AT 303-634-3470 PRIOR TO CONSTRUCTION FOR TESTING REQUIREMENTS.
9. DUCTILE IRON PIPE AND NITRILE GASKETS ARE REQUIRED FOR ALL 3-INCH OR LARGER PIPING.
10. IRRIGATION/LANDSCAPE PLAN REVIEW WILL BE REQUIRED PRIOR TO SETTING THE IRRIGATION TAP METER.

EES ENTITLEMENT AND ENGINEERING SOLUTIONS, INC.
501 S Cherry St
Suite 300
Denver, CO 80246
www.ees.us.com
303-572-7997

wenk
ASSOCIATES
PLANNERS & LANDSCAPE ARCHITECTS
303.628.0003

DENVER
THE MILE HIGH CITY

RIVER NORTH PARK
DENVER, COLORADO

JOSHUA S. PRUITT
COLORADO LICENSED
LANDSCAPE ARCHITECT
11/19/18
47215
PROFESSIONAL ENGINEER

FOR AND ON BEHALF OF EES
NOT VALID WITHOUT ORIGINAL SIGNATURE

KEY PLAN:

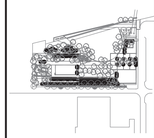

REVISIONS:
NAME DATE

DRAWN BY:
JLH

REVIEWED BY:
JSP

PROJECT NUMBER:
15014

DATE:
OCTOBER, 2018

ISSUE:
BID SET

SHEET TITLE:
WATER ONLY PLAN

SHEET NUMBER:
C6.2

© 2017, ALL RIGHTS RESERVED.

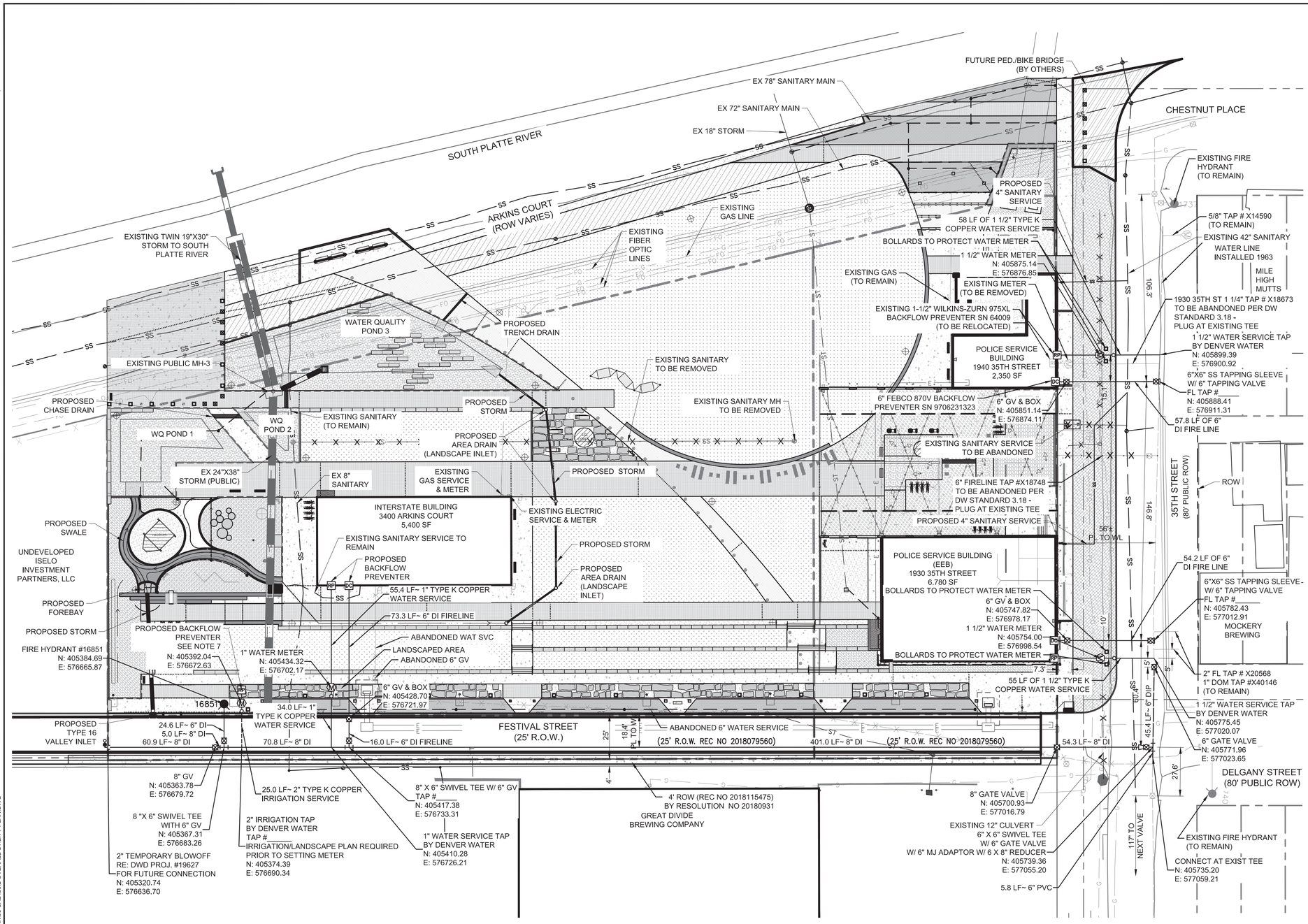

NOTES

1. EXISTING UTILITIES WERE COMPILED USING THE BEST AVAILABLE INFORMATION AND FIELD OBSERVATIONS. EES DOES NOT GUARANTEE THE LOCATION OF UNDERGROUND UTILITIES SHOWN HEREON. CONTRACTOR TO VERIFY UTILITY HORIZONTAL AND VERTICAL LOCATION PRIOR TO CONSTRUCTION.

2. CONTRACTOR IS RESPONSIBLE FOR MAINTAINING THE INTEGRITY OF THE EXISTING TRACER WIRE. A CONTINUITY TEST OF THE TRACER WIRE WILL BE CONDUCTED A THE END OF CONSTRUCTION. THE CONTRACTOR WILL BE RESPONSIBLE FOR REPAIR OF ANY BREAKS IN THE WIRE AT OR NEAR PROPOSED EXCAVATIONS.

811 Know what's below. Call before you dig.

CALL UTILITY NOTIFICATION CENTER OF COLORADO
1-800-922-1987 or 811
CALL 3-BUSINESS DAYS (NOT INCLUDING INITIAL DAY OF CONTACT) IN ADVANCE BEFORE YOU DIG, GRADE, OR EXCAVATE FOR THE MARKING OF UNDERGROUND MEMBER UTILITIES.

EES ENTITLEMENT AND ENGINEERING SOLUTIONS, INC.
501 S Cherry St
Suite 300
Denver, CO 80246
www.ees.us.com
303-572-7997

WENK ASSOCIATES
PLANNERS & LANDSCAPE ARCHITECTS
303.628.0003

DENVER THE MILE HIGH CITY

RIVER NORTH PARK
DENVER, COLORADO

COLORADO LICENSED PROFESSIONAL ENGINEER 11/19/18 47215
FOR AND ON BEHALF OF EES
NOT VALID WITHOUT ORIGINAL SIGNATURE

KEY PLAN:

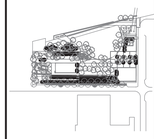

REVISIONS:
NAME DATE

DRAWN BY: JLH
REVIEWED BY: JSP
PROJECT NUMBER: 15014
DATE: **OCTOBER, 2018**
ISSUE: BID SET
SHEET TITLE: OVERALL UTILITY PLAN
SHEET NUMBER: C6.3

8/21/2015 12:21 PM P:\WENK LARINO PARK\08 CADD\C2 OVERALL UTILITY PLAN.DWG

OVERA□□ □A□O□T□ MATERIA□□ P□AN

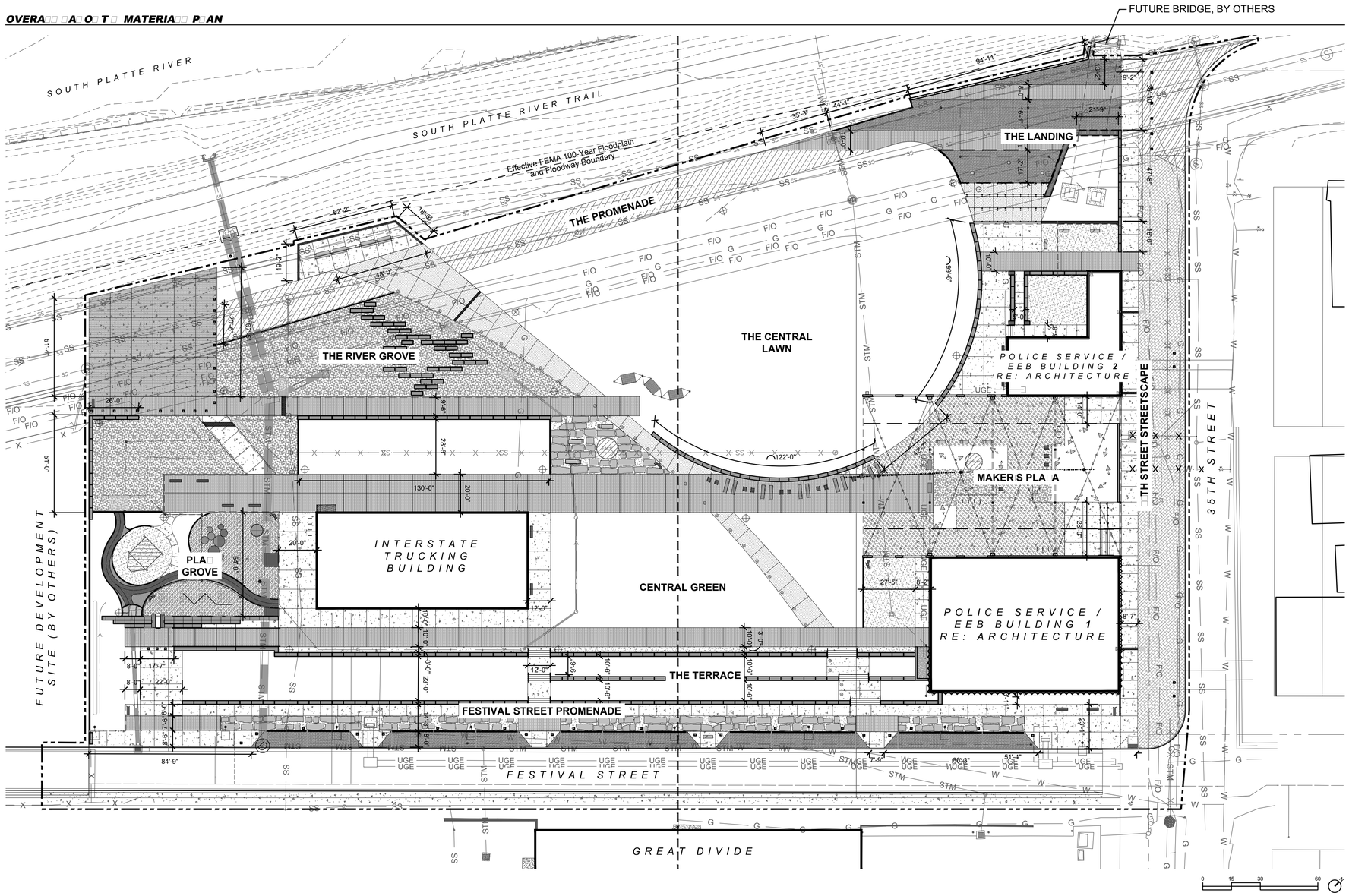

□A□O□T□ MATERIA□□ □E□EN□

- ASPHALT PAVING - EXISTING
- ASPHALT PAVING - NEW
- CONCRETE PAVING - STANDARD FINISH
- CONCRETE PAVING - TINED FINISH
- CONCRETE PAVING - SAND FINISH
- CONCRETE PAVING - EXISTING (TEXTURI□ED)
- CONCRETE PAVING - RECYCLED SLAB
- CONCRETE UNIT PAVERS - PERMEABLE
- CRUSHER FINES PAVING
- WATER QUALITY POND
- GROUTED COBBLE SWALE
- ENGINEERED WOOD FIBER
- ROAD BASE MATERIAL
- CONCRETE WALL
- MSE WALL
- CONCRETE BIN BLOCK WALL
- CONCRETE BAND
- CHASE DRAIN
- TRENCH GRATE
- HANDRAIL
- WOOD BENCH
- UNDERDRAIN
- CLEANOUT
- BOLLARD (6□□6)
- BOLLARD (6□□6) - REMOVABLE
- BOLLARD (6□□6) - LIGHTED
- BOLLARD (9□□9) - POWERED
- BOLLARD (9□□9)
- ART
- ELECTRICAL ENCLOSURE
- FIRE LANE
- EFFECTIVE FEMA 100-YEAR FLOODPLAIN AND FLOODWAY BOUNDARY

NOTES:

1. NO FILL OR STRUCTURES ARE ALLOWED IN FLOODWAY.
2. FLOOD HA□ARD INFORMATION FROM FEMA FIRM, MAP NUMBER 0800460088H, MAP REVISED NOVEMBER 20, 2013
3. BOLLARD SYMBOLS ARE REPRESENTATIONAL AND DO NOT REFLECT ACTUAL SI□E

wenk
ASSOCIATES
PLANNERS & LANDSCAPE ARCHITECTS
303.628.0003

DENVER
THE MILE HIGH CITY

RIVER NORTH PARK

DENVER, COLORADO

NICOLE K. HORST
626
08/07/2008
Original Date of Licensure
STATE OF COLORADO
LICENSED LANDSCAPE ARCHITECT
FOR AND ON BEHALF OF WENK ASSOCIATES
NOT VALID WITHOUT ORIGINAL SIGNATURE

KEY PLAN:

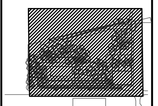

REVISIONS:

NAME	DATE

DRAWN BY: BP/TS

REVIEWED BY: NH

PROJECT NUMBER: 15014

DATE: **OCTOBER 2018**

ISSUE: BID SET

SHEET TITLE: OVERALL LAYOUT PLAN & NOTES

SHEET NUMBER: L1.0

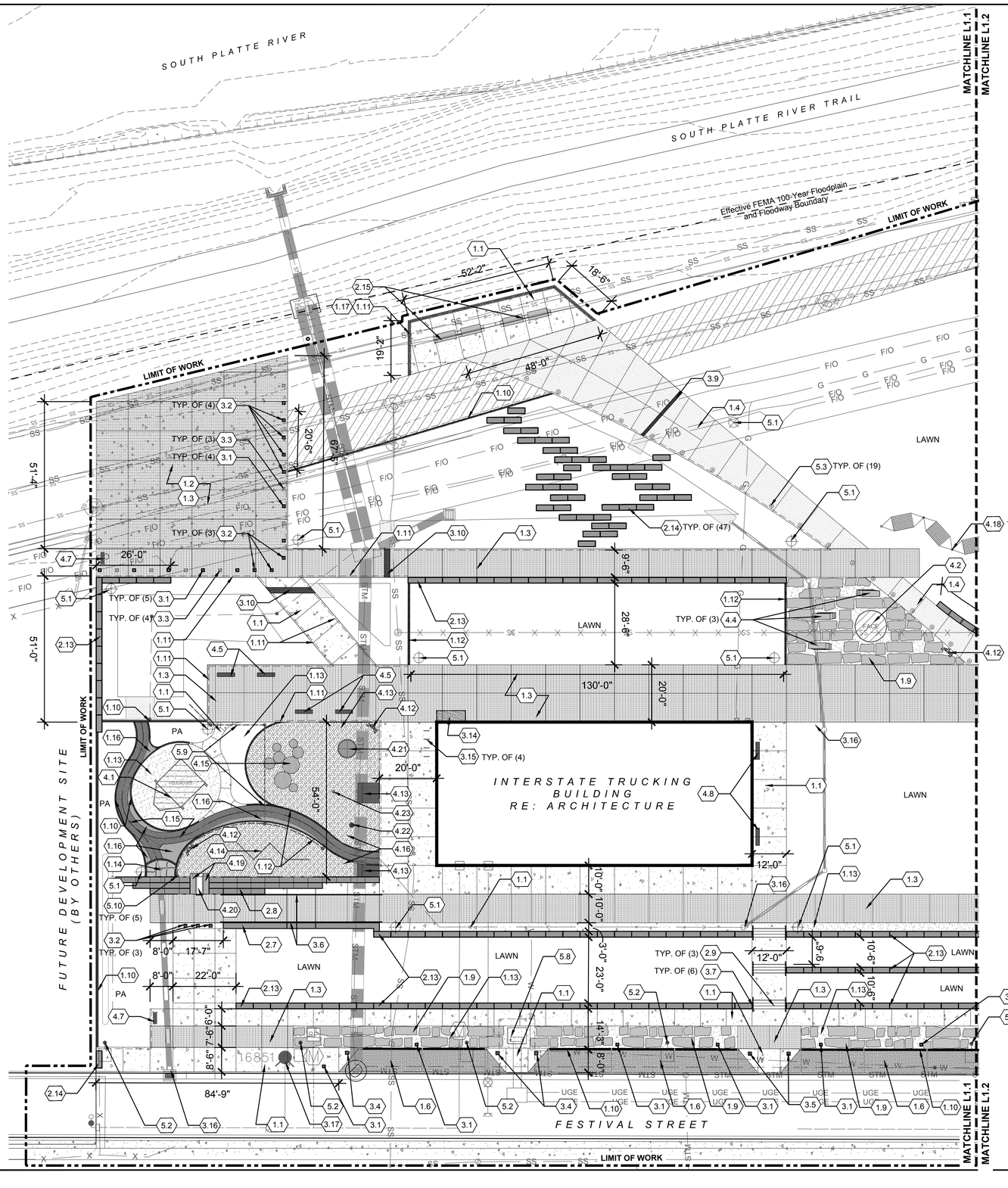

LEGEND

- ASPHALT PAVING - EXISTING
- ASPHALT PAVING - NEW
- CONCRETE PAVING - STANDARD FINISH
- CONCRETE PAVING - TINED FINISH
- CONCRETE PAVING - SAND FINISH
- CONCRETE PAVING - EXISTING (TEXTURIZED)
- CONCRETE PAVING - RECYCLED SLAB
- CONCRETE UNIT PAVERS - PERMEABLE
- CRUSHER FINES PAVING
- WATER QUALITY POND
- GROUTED COBBLE SWALE
- ENGINEERED WOOD FIBER
- ROAD BASE MATERIAL
- CONCRETE WALL
- MSE WALL
- CONCRETE BIN BLOCK WALL
- CONCRETE BAND
- CHASE DRAIN
- TRENCH GRATE
- HANDRAIL
- WOOD BENCH
- UNDERDRAIN
- CLEANOUT
- BOLLARD (6"x6")
- BOLLARD (6"x6") - REMOVABLE
- BOLLARD (6"x6") - LIGHTED
- BOLLARD (9"x9") - POWERED
- BOLLARD (9"x9")
- ART
- ELECTRICAL ENCLOSURE
- FIRE LANE
- EFFECTIVE FEMA 100-YEAR FLOODPLAIN AND FLOODWAY BOUNDARY

PLAN NOTES

1.0 PAVEMENTS, BANDS, CURBS — DETAIL

1.1	CONCRETE PAVING - STANDARD FINISH	RE: 01/L4.1
1.2	CONCRETE PAVING - VEHICULAR	RE: 02/L4.1
1.3	CONCRETE PAVING - TINED FINISH	RE: 01/L4.1
1.4	CONCRETE PAVING - SAND FINISH	RE: 01/L4.1
1.5	CONCRETE PAVING - TEXTURIED	RE: 01/L4.1
1.6	CONCRETE UNIT PAVERS - PERMEABLE	RE: 04/L4.1
1.7	DOWELED JOINT CONNECTION	RE: 03/L4.1
1.8	CONCRETE ROLLOVER CURB	RE: CIVIL
1.9	RECYCLED CONCRETE SLAB PAVING	RE: 06/L4.1
1.10	CONCRETE BAND	RE: 05/L4.2
1.11	CONCRETE THICKENED EDGE	RE: 07/L4.1
1.12	CONCRETE VERTICAL BAND	RE: 04/L4.2
1.13	CRUSHER FINES PAVING	RE: 05/L4.1
1.14	CONCRETE FOREBAY BAND	RE: 04/L4.12
1.15	GROUTED COBBLE SWALE	RE: 01/L4.12
1.16	GROUTED COBBLE SWALE & APRON	RE: 02/L4.12
1.17	DETECTABLE WARNING SCORING	RE: 08.L4.1

2.0 WALLS, STAIRS — DETAIL

2.1	CONCRETE MSE WALL	RE: 03/L4.2
2.2	CONCRETE SEAT WALL	RE: 01/L4.2
2.3	NOT USED	N/A
2.4	CONCRETE JOINT - SKATE STOP	RE: 05/L4.9
2.5	CONCRETE SLOPED WALL @ LANDING	RE: 01/L4.5
2.6	CONCRETE TERRACES @ LANDING	RE: 01/L4.4
2.7	CONCRETE SLOPED WALL @ PLAY AREA	RE: 01/L4.6
2.8	CONCRETE TERRACES @ PLAY AREA	RE: 01/L4.6
2.9	CONCRETE STEPS - TYPICAL	RE: 02/L4.3
2.10	CONCRETE STEPS - 2 RISERS	RE: 03/L4.3
2.11	CONCRETE STEPS @ MAKER'S PLACA	RE: 01/L4.3
2.12	CONCRETE RETAINING WALL	RE: 02/L4.2
2.13	BIN BLOCK SEAT WALL	RE: 01/L4.8
2.14	BIN BLOCK WALL @ WATER QUALITY	RE: 02/L4.8
2.15	BIN BLOCK WALL BENCH	RE: 03/L4.8
2.16	BIN BLOCK WALL @ CAFE TERRACE	RE: 01/L4.15

3.0 METAL / FENCES — DETAIL

3.1	METAL BOLLARD - 6"x6"	RE: 01/L4.10
3.2	METAL BOLLARD - 6"x6" REMOVABLE	RE: 02/L4.10
3.3	METAL BOLLARD - 6"x6" LIGHTED	RE: 03/L4.10
3.4	METAL BOLLARD - 9"x9" POWERED	RE: 04/L4.10
3.5	METAL BOLLARD - 9"x9"	RE: 04/L4.10
3.6	METAL HANDRAIL @ RAMP	RE: 01/L4.7
3.7	METAL HANDRAIL @ STAIRS	RE: 02/L4.7
3.8	PAVER RESTRAINT @ TREE	RE: 05/L4.10
3.9	TRENCH DRAIN	RE: 02/L4.9
3.10	CHASE DRAIN	RE: 03/L4.9
3.11	LANDSCAPE DRAIN	RE: 04/L4.9
3.12	PLACA DRAIN	RE: 01/L4.9
3.13	SKATE STOP	RE: 06/L4.10
3.14	ELECTRICAL ENCLOSURE	RE: ARCH
3.15	BICYCLE RACK	RE: 06/L4.8
3.16	AREA DRAIN	RE: CIVIL
3.17	FIRE HYDRANT	RE: CIVIL

4.0 FEATURE ELEMENTS — DETAIL

4.1	ART- TELESCOPE, FOUNDATION ONLY	RE: 01/L4.14
4.2	ART- FACE, FOUNDATION ONLY	RE: 02/L4.14
4.3	ART- TUMBLER	RE: 03/L4.14
4.4	BENCH - STACK	RE: ARCH
4.5	BENCH - PILE A	RE: ARCH
4.6	BENCH - PILE B	RE: ARCH
4.7	BENCH - LANDMARK	RE: ARCH
4.8	BENCH - I BEAM	RE: ARCH
4.9	CHAIR - I BEAM	RE: ARCH
4.10	CHAISE - I BEAM	RE: ARCH
4.11	HOIST SWING	RE: ARCH
4.12	PIPE WORKS PHONE	RE: ARCH
4.13	PLAY AREA RAMP	RE: 01/L4.13
4.14	SEESAW BALANCE BEAMS	RE: ARCH
4.15	PIPE ISLANDS	RE: ARCH
4.16	ENGINEERED WOOD FIBER	RE: 03/L4.13
4.17	DECKING @ LANDING	RE: 01/L4.11
4.18	HAMMOCK HITCH	RE: ARCH
4.19	POURED-IN-PLACE SURFACING	RE: 02/L4.13
4.20	CONCRETE EMBANKMENT SLIDE	RE: 04/L4.12
4.21	'DISH'	RE: SPECS
4.22	'WHIRLWIND'	RE: SPECS
4.23	'JUMPER'	RE: SPECS

5.0 SITE LIGHTING/ELECTRICAL/UTILITIES — DETAIL

5.1	MULTI-HEAD LIGHT	RE: ELEC
5.2	FESTIVAL STREET LIGHT	RE: ELEC
5.3	IN-GRADE LIGHT (SOLAR)	RE: ELEC
5.4	OVERHEAD STRING LIGHT	RE: ELEC
5.5	TREE UPLIGHT	RE: ELEC
5.6	STEP LIGHT	RE: ELEC
5.7	WALL PACK LIGHT	RE: ELEC
5.8	TRANSFORMER	RE: ELEC
5.9	UNDERDRAIN	RE: 04/L4.13
5.10	CLEANOUT	RE: 05/L4.13

NOTES:

1. NO FILL OR STRUCTURES ARE ALLOWED IN FLOODWAY.
2. FLOOD HAZARD INFORMATION FROM FEMA FIRM, MAP NUMBER 0800460088H, MAP REVISED NOVEMBER 20, 2013
3. BOLLARD SYMBOLS ARE REPRESENTATIONAL AND DO NOT REFLECT ACTUAL SIZE

0 10 20 40

wenk
ASSOCIATES
PLANNERS & LANDSCAPE ARCHITECTS
303.628.0003

DENVER
THE MILE HIGH CITY

RIVER NORTH PARK

DENVER, COLORADO

NICOLE K. HORST
626
10/07/2008
Original Date of Licensure
STATE OF COLORADO
LICENSED LANDSCAPE ARCHITECT
FOR AND ON BEHALF OF WENK ASSOCIATES
NOT VALID WITHOUT ORIGINAL SIGNATURE

KEY PLAN:

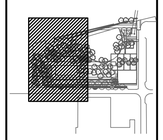

REVISIONS:

NAME	DATE

DRAWN BY: BP/TS

REVIEWED BY: NH

PROJECT NUMBER: 15014

DATE: **OCTOBER 2018**

ISSUE: BID SET

SHEET TITLE: LAYOUT PLAN

SHEET NUMBER: L1.1

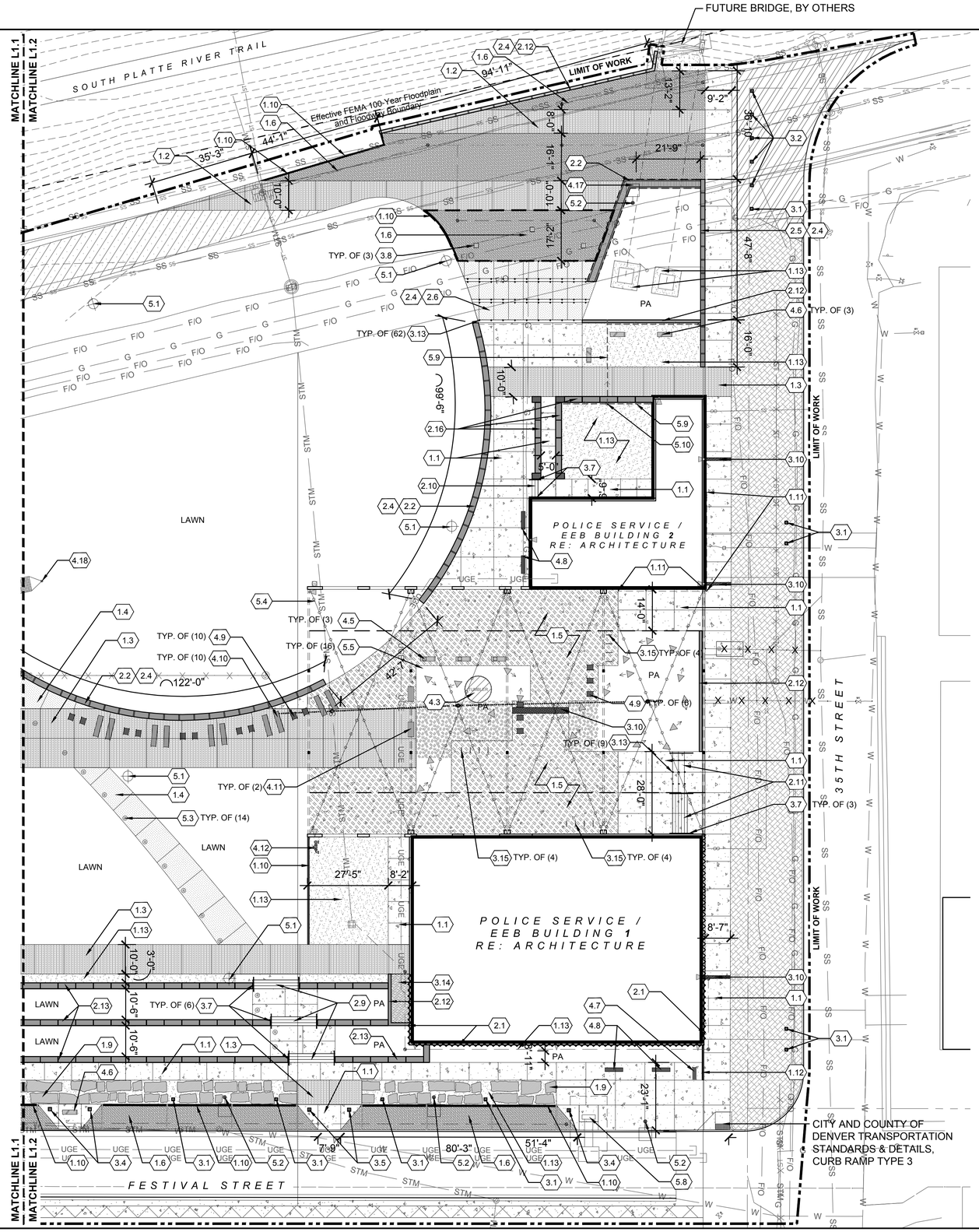

PLAN MATERIAL LEGEND

- ASPHALT PAVING - EXISTING
- ASPHALT PAVING - NEW
- CONCRETE PAVING - STANDARD FINISH
- CONCRETE PAVING - TINED FINISH
- CONCRETE PAVING - SAND FINISH
- CONCRETE PAVING - EXISTING (TEXTURED)
- CONCRETE PAVING - RECYCLED SLAB
- CONCRETE UNIT PAVERS - PERMEABLE
- CRUSHER FINES PAVING
- WATER QUALITY POND
- GROUTED COBBLE SWALE
- ENGINEERED WOOD FIBER
- ROAD BASE MATERIAL
- CONCRETE WALL
- MSE WALL
- CONCRETE BIN BLOCK WALL
- CONCRETE BAND
- CHASE DRAIN
- TRENCH GRATE
- HANDRAIL
- WOOD BENCH
- UNDERDRAIN
- CLEANOUT
- BOLLARD (6"x6")
- BOLLARD (6"x6") - REMOVABLE
- BOLLARD (6"x6") - LIGHTED
- BOLLARD (9"x9") - POWERED
- BOLLARD (9"x9")
- ART
- ELECTRICAL ENCLOSURE
- FIRE LANE
- EFFECTIVE FEMA 100-YEAR FLOODPLAIN AND FLOODWAY BOUNDARY

PLAN NOTE

1.0 PAVEMENTS, BANDS & CURBS

		DETAIL
1.1	CONCRETE PAVING - STANDARD FINISH	RE: 01/L4.1
1.2	CONCRETE PAVING - VEHICULAR	RE: 02/L4.1
1.3	CONCRETE PAVING - TINED FINISH	RE: 01/L4.1
1.4	CONCRETE PAVING - SAND FINISH	RE: 01/L4.1
1.5	CONCRETE PAVING - TEXTURED	RE: 01/L4.1
1.6	CONCRETE UNIT PAVERS - PERMEABLE	RE: 04/L4.1
1.7	DOWELED JOINT CONNECTION	RE: 03/L4.1
1.8	CONCRETE ROLLOVER CURB	RE: CIVIL
1.9	RECYCLED CONCRETE SLAB PAVING	RE: 06/L4.1
1.10	CONCRETE BAND	RE: 05/L4.2
1.11	CONCRETE THICKENED EDGE	RE: 07/L4.1
1.12	CONCRETE VERTICAL BAND	RE: 04/L4.2
1.13	CRUSHER FINES PAVING	RE: 05/L4.1
1.14	CONCRETE FOREBAY BAND	RE: 04/L4.12
1.15	GROUTED COBBLE SWALE	RE: 01/L4.12
1.16	GROUTED COBBLE SWALE & APRON	RE: 02/L4.12
1.17	DETECTABLE WARNING SCORING	RE: 08.L4.1

2.0 WALLS & STAIRS

		DETAIL
2.1	CONCRETE MSE WALL	RE: 03/L4.2
2.2	CONCRETE SEAT WALL	RE: 01/L4.2
2.3	NOT USED	N/A
2.4	CONCRETE JOINT - SKATE STOP	RE: 05/L4.9
2.5	CONCRETE SLOPED WALL & LANDING	RE: 01/L4.5
2.6	CONCRETE TERRACES & LANDING	RE: 01/L4.4
2.7	CONCRETE SLOPED WALL & PLAY AREA	RE: 01/L4.6
2.8	CONCRETE TERRACES & PLAY AREA	RE: 01/L4.6
2.9	CONCRETE STEPS - TYPICAL	RE: 02/L4.3
2.10	CONCRETE STEPS - 2 RISERS	RE: 03/L4.3
2.11	CONCRETE STEPS & MAKER'S PLACA	RE: 01/L4.3
2.12	CONCRETE RETAINING WALL	RE: 02/L4.2
2.13	BIN BLOCK SEAT WALL	RE: 01/L4.8
2.14	BIN BLOCK WALL & WATER QUALITY	RE: 02/L4.8
2.15	BIN BLOCK WALL BENCH	RE: 03/L4.8
2.16	BIN BLOCK WALL & CAFE TERRACE	RE: 01/L4.15

3.0 METAL / FENCES

		DETAIL
3.1	METAL BOLLARD - 6"x6"	RE: 01/L4.10
3.2	METAL BOLLARD - 6"x6" REMOVABLE	RE: 02/L4.10
3.3	METAL BOLLARD - 6"x6" LIGHTED	RE: 03/L4.10
3.4	METAL BOLLARD - 9"x9" POWERED	RE: 04/L4.10
3.5	METAL BOLLARD - 9"x9"	RE: 04/L4.10
3.6	METAL HANDRAIL & RAMP	RE: 01/L4.7
3.7	METAL HANDRAIL & STAIRS	RE: 02/L4.7
3.8	PAVER RESTRAINT & TREE	RE: 05/L4.10
3.9	TRENCH DRAIN	RE: 02/L4.9
3.10	CHASE DRAIN	RE: 03/L4.9
3.11	LANDSCAPE DRAIN	RE: 04/L4.9
3.12	PLACA DRAIN	RE: 01/L4.9
3.13	SKATE STOP	RE: 06/L4.10
3.14	ELECTRICAL ENCLOSURE	RE: ARCH
3.15	BICYCLE RACK	RE: 06/L4.8
3.16	AREA DRAIN	RE: CIVIL
3.17	FIRE HYDRANT	RE: CIVIL

4.0 FEATURE ELEMENTS

		DETAIL
4.1	ART- TELESCOPE, FOUNDATION ONLY	RE: 01/L4.14
4.2	ART- FACE, FOUNDATION ONLY	RE: 02/L4.14
4.3	ART- TUMBLER	RE: 03/L4.14
4.4	BENCH - STACK	RE: ARCH
4.5	BENCH - PILE A	RE: ARCH
4.6	BENCH - PILE B	RE: ARCH
4.7	BENCH - LANDMARK	RE: ARCH
4.8	BENCH - I BEAM	RE: ARCH
4.9	CHAIR - I BEAM	RE: ARCH
4.10	CHAISE - I BEAM	RE: ARCH
4.11	HOIST SWING	RE: ARCH
4.12	PIPE WORKS PHONE	RE: ARCH
4.13	PLAY AREA RAMP	RE: 01/L4.13
4.14	EEB BALANCE BEAMS	RE: ARCH
4.15	PIPE ISLANDS	RE: ARCH
4.16	ENGINEERED WOOD FIBER	RE: 03/L4.13
4.17	DECKING & LANDING	RE: 01/L4.11
4.18	HAMMOCK HITCH	RE: ARCH
4.19	POURED-IN-PLACE SURFACING	RE: 02/L4.13
4.20	CONCRETE EMBANKMENT SLIDE	RE: 04/L4.12
4.21	'DISH'	RE: SPECS
4.22	'WHIRLWIND'	RE: SPECS
4.23	'JUMPER'	RE: SPECS

5.0 SITE LIGHTING/ELECTRICAL/UTILITIES

		DETAIL
5.1	MULTI-HEAD LIGHT	RE: ELEC
5.2	FESTIVAL STREET LIGHT	RE: ELEC
5.3	IN-GRADE LIGHT (SOLAR)	RE: ELEC
5.4	OVERHEAD STRING LIGHT	RE: ELEC
5.5	TREE UPLIGHT	RE: ELEC
5.6	STEP LIGHT	RE: ELEC
5.7	WALL PACK LIGHT	RE: ELEC
5.8	TRANSFORMER	RE: ELEC
5.9	UNDERDRAIN	RE: 04/L4.13
5.10	CLEANOUT	RE: 05/L4.13

NOTES:

1. NO FILL OR STRUCTURES ARE ALLOWED IN FLOODWAY.
2. FLOOD HAZARD INFORMATION FROM FEMA FIRM, MAP NUMBER 0800460088H, MAP REVISED NOVEMBER 20, 2013
3. BOLLARD SYMBOLS ARE REPRESENTATIONAL AND DO NOT REFLECT ACTUAL SIZE

0 10 20 40

wenk
ASSOCIATES
PLANNERS & LANDSCAPE ARCHITECTS
303.628.0003

DENVER
THE MILE HIGH CITY

RIVER NORTH PARK

DENVER, COLORADO

NICOLE K. HORST
626
10/07/2008
Original Date of Licensure
STATE OF COLORADO
LICENSED LANDSCAPE ARCHITECT
FOR AND ON BEHALF OF WENK ASSOCIATES
NOT VALID WITHOUT ORIGINAL SIGNATURE

KEY PLAN:

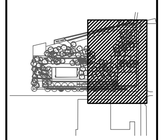

REVISIONS:

NAME	DATE

DRAWN BY: BP/TS

REVIEWED BY: NH

PROJECT NUMBER: 15014

DATE: **OCTOBER 2018**

ISSUE: BID SET

SHEET TITLE: LAYOUT PLAN

SHEET NUMBER: L1.2

OVERALL SOIL MATERIAL PLAN

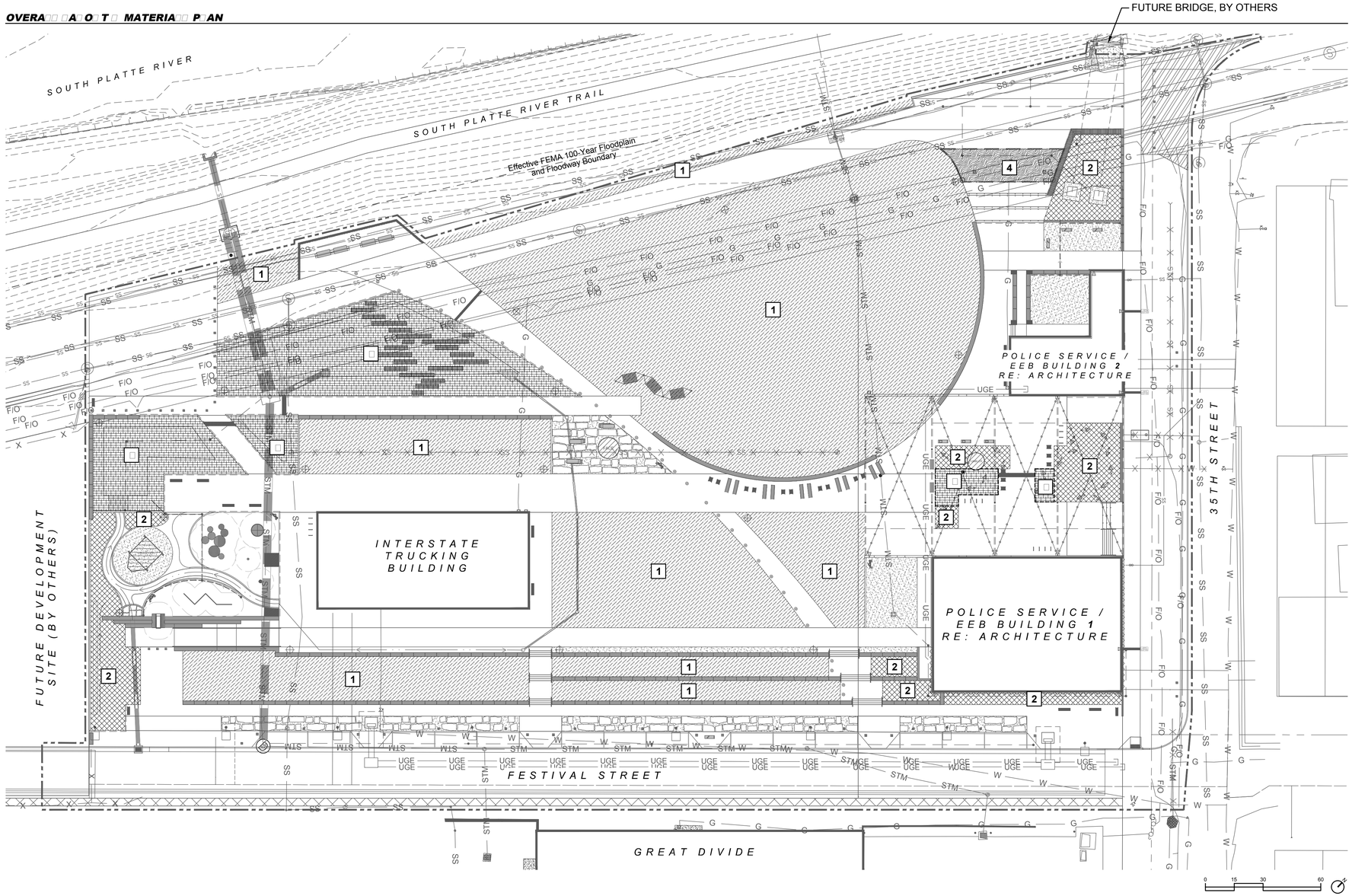

SOIL LEGEND

1	6" NEW TOPSOIL
2	6" AMENDED TOPSOIL
	PLD MIX (RE: CIVIL)
4	CU STRUCTURAL SOIL

NOTES:

1. NO FILL OR STRUCTURES ARE ALLOWED IN FLOODWAY.
2. FLOOD HAZARD INFORMATION FROM FEMA FIRM, MAP NUMBER 0800460088H, MAP REVISED NOVEMBER 20, 2013
3. BOLLARD SYMBOLS ARE REPRESENTATIONAL AND DO NOT REFLECT ACTUAL SIZE

wenk
ASSOCIATES
PLANNERS & LANDSCAPE ARCHITECTS
303.628.0003

DENVER
THE MILE HIGH CITY

RIVER NORTH PARK

DENVER, COLORADO

NICOLE K. HORST
626
08/07/2008
Original Date of Licensure
STATE OF COLORADO
LICENSED LANDSCAPE ARCHITECT

FOR AND ON BEHALF OF WENK ASSOCIATES
NOT VALID WITHOUT ORIGINAL SIGNATURE

KEY PLAN:

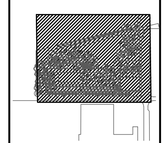

REVISIONS:

NAME	DATE

DRAWN BY: BP/TS

REVIEWED BY: NH

PROJECT NUMBER: 15014

DATE: **OCTOBER 2018**

ISSUE: BID SET

SHEET TITLE: OVERALL SOILS PLAN

SHEET NUMBER: L1.3

OVERALL MULCH PLAN

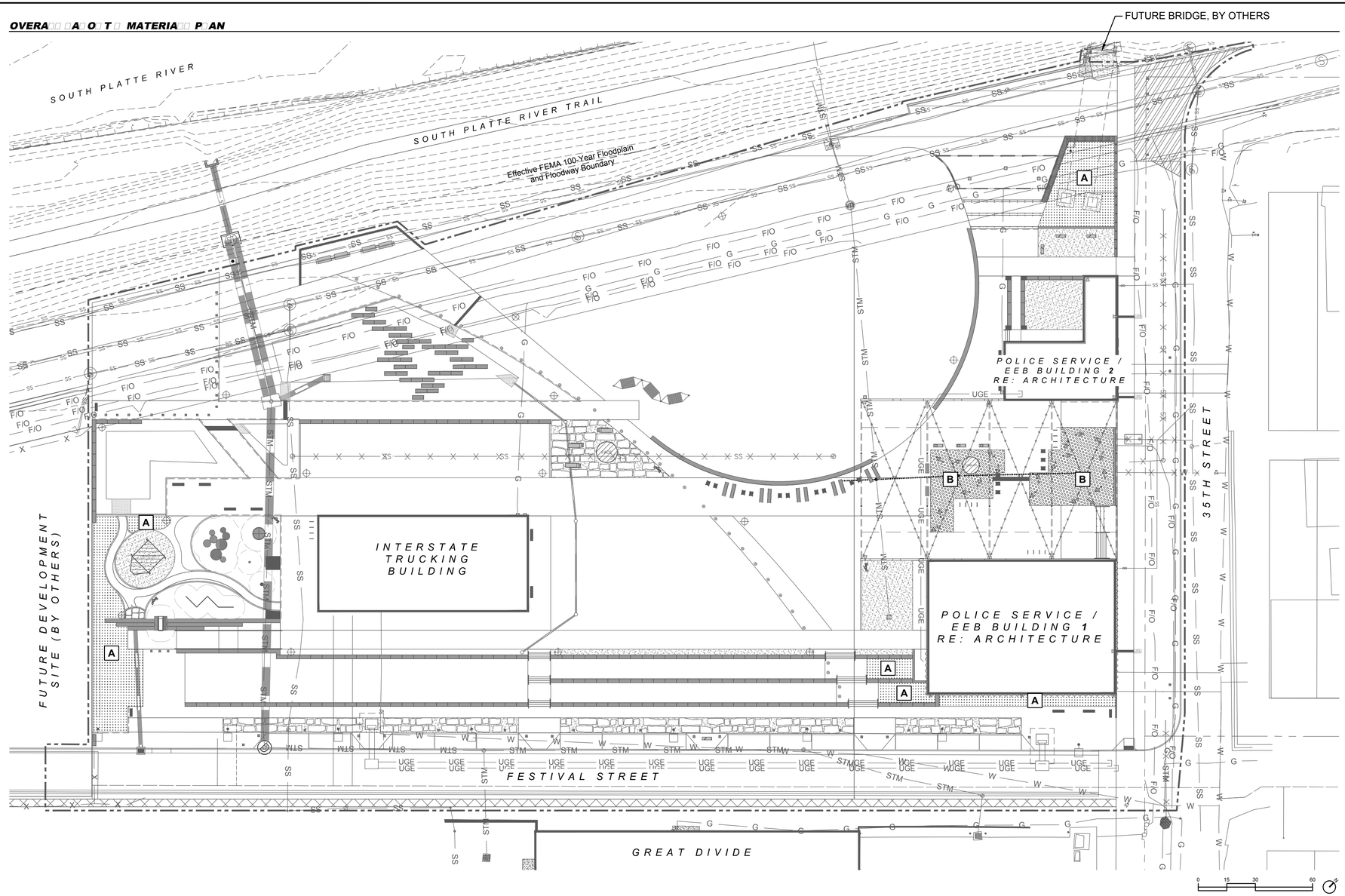

MULCH LEGEND

A	WOOD MULCH (RE:SPECS)
B	ROCK MULCH (RE:SPECS)

NOTES:

1. NO FILL OR STRUCTURES ARE ALLOWED IN FLOODWAY.
2. FLOOD HAZARD INFORMATION FROM FEMA FIRM, MAP NUMBER 0800460088H, MAP REVISED NOVEMBER 20, 2013
3. BOLLARD SYMBOLS ARE REPRESENTATIONAL AND DO NOT REFLECT ACTUAL SIZE

wenk ASSOCIATES
PLANNERS & LANDSCAPE ARCHITECTS
303.628.0003

DENVER
THE MILE HIGH CITY

RIVER NORTH PARK

DENVER, COLORADO

NICOLE K. HORST 626
06/07/2006 Original Date of Licensure
STATE OF COLORADO LICENSED LANDSCAPE ARCHITECT
FOR AND ON BEHALF OF WENK ASSOCIATES
NOT VALID WITHOUT ORIGINAL SIGNATURE

KEY PLAN:

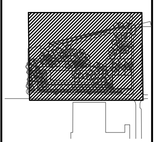

REVISIONS:

NAME	DATE

DRAWN BY: BP/TS

REVIEWED BY: NH

PROJECT NUMBER: 15014

DATE: **OCTOBER 2018**

ISSUE: BID SET

SHEET TITLE: OVERALL MULCH PLAN

SHEET NUMBER: L1.4

E TION KE P AN

SOUTH PLATTE RIVER

SOUTH PLATTE RIVER TRAIL

Effective FEMA 100-Year Floodplain and Floodway Boundary

FUTURE PED. BRIDGE, BY OTHERS

THE LANDING

THE PROMENADE

THE CENTRAL LAWN

THE RIVER GROVE

POLICE SERVICE / EEB BUILDING

MAKER'S PLA A

PLA GROVE

INTERSTATE TRUCKING BUILDING

CENTRAL GREEN

POLICE SERVICE / EEB BUILDING

35TH STREET

FUTURE DEVELOPMENT SITE (BY OTHERS)

THE TERRACE

FESTIVAL STREET PROMENADE

FUTURE FESTIVAL STREET (BY OTHERS)

FESTIVAL STREET

GREAT DIVIDE

0 15 30 60

Wenk

ASSOCIATES
PLANNERS & LANDSCAPE ARCHITECTS
303.628.0003

DENVER
THE MILE HIGH CITY

RIVER NORTH PARK

DENVER, COLORADO

NICOLE K. HORST
626
10/07/2008
Original Date of Licensure
STATE OF COLORADO
LICENSED LANDSCAPE ARCHITECT

FOR AND ON BEHALF OF WENK ASSOCIATES
NOT VALID WITHOUT ORIGINAL SIGNATURE

KEY PLAN:

REVISIONS:

NAME	DATE

DRAWN BY:
BP/TS

REVIEWED BY:
NH

PROJECT NUMBER:
15014

DATE:
OCTOBER 2018

ISSUE:
BID SET

SHEET TITLE:
LANDSCAPE SECTIONS

SHEET NUMBER:
L3.0

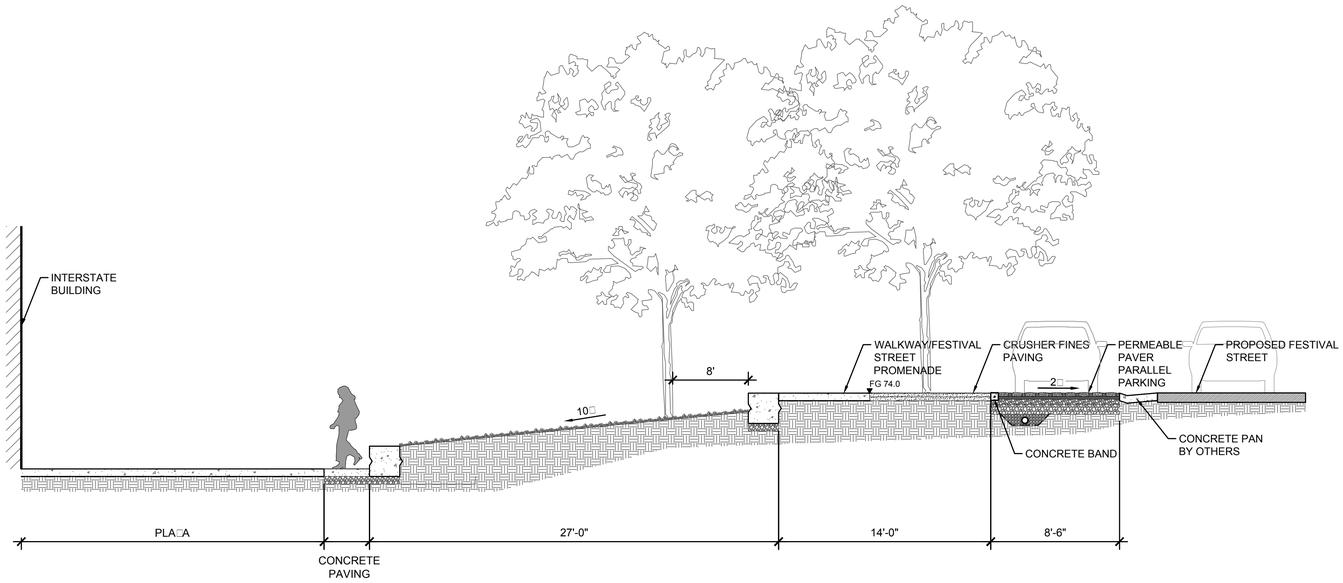

OPEN PLAZA
SCALE: 1"=5'-0"

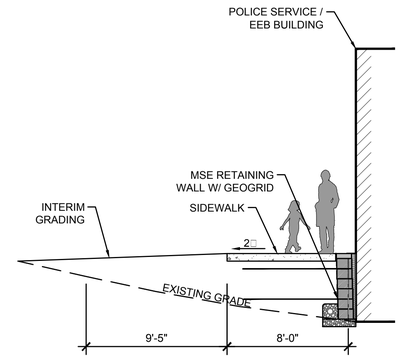

PARK EDGE AT 20TH STREET
SCALE: 1"=5'-0"

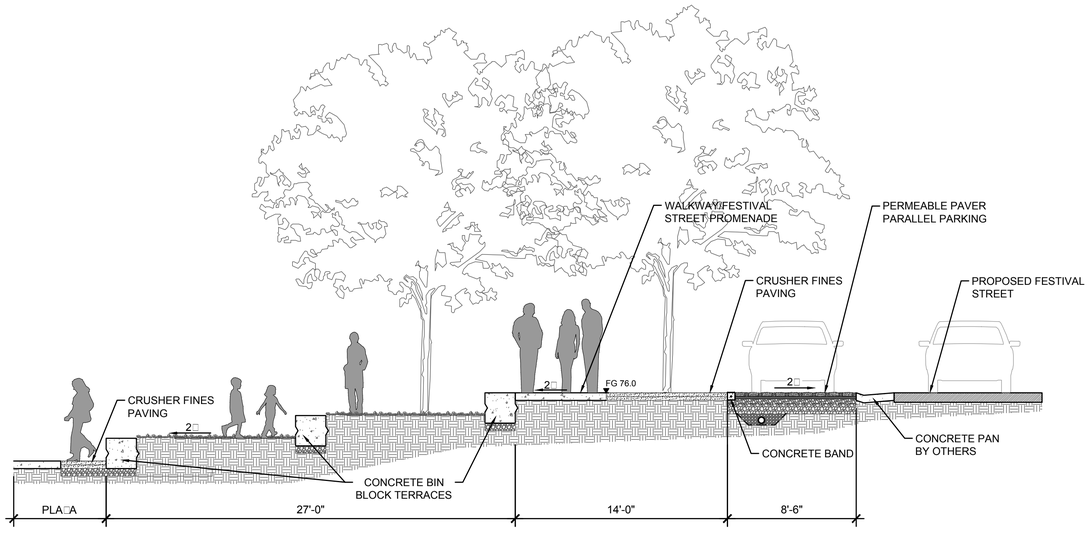

CONCRETE TERRACE
SCALE: 1"=5'-0"

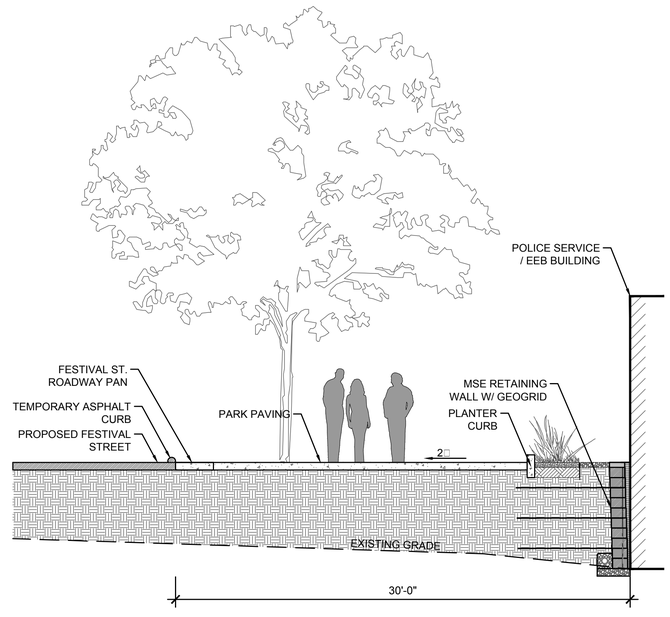

PARK ENTRY AT ESTIVA STREET
SCALE: 1"=5'-0"

wenk
ASSOCIATES
PLANNERS & LANDSCAPE ARCHITECTS
303.628.0003

DENVER
THE MILE HIGH CITY

RIVER NORTH PARK
DENVER, COLORADO

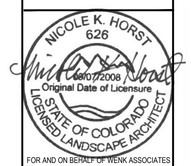

FOR AND ON BEHALF OF WENK ASSOCIATES
NOT VALID WITHOUT ORIGINAL SIGNATURE

KEY PLAN:

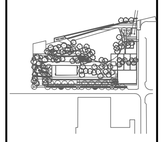

REVISIONS:
NAME DATE

DRAWN BY:
BP/TS

REVIEWED BY:
NH

PROJECT NUMBER:
15014

DATE:
OCTOBER 2018

ISSUE:
BID SET

SHEET TITLE:
LANDSCAPE SECTIONS

SHEET NUMBER:
L3.1

NOTES:
1. REFER TO SPECIFICATIONS FOR ALL MATERIALS CALLED OUT ON DETAIL.
2. SUBGRADE SHALL BE AT OR WITHIN 2% MAX. ABOVE OPTIMUM MOISTURE CONTENT (OMC) PRIOR TO PROOF ROLLING, & MUST REMAIN AT OR WITHIN 2% ABOVE OMC UNTIL CONCRETE IS PLACED. REFERENCE GEOTECHNICAL REPORT FOR MORE INFORMATION.

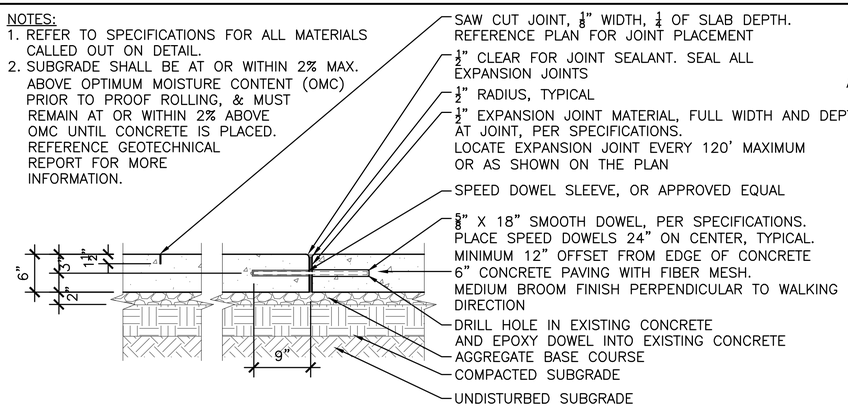

CONCRETE PAVING
1" = 1'-0"

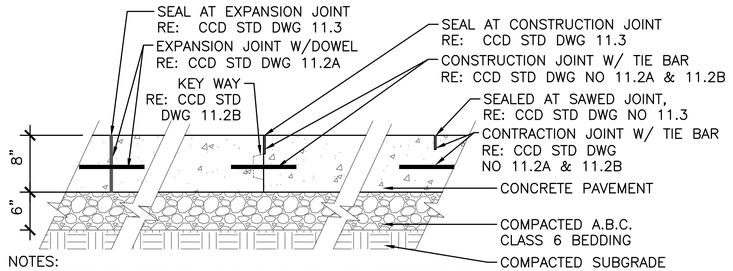

NOTES:
1. REFERENCE SPECIFICATIONS & PLANS FOR CONCRETE FINISH AND COLOR.
2. CONTRACTOR TO SUBMIT PAVEMENT JOINT LAYOUT PLAN FOR REVIEW AND APPROVAL BY ENGINEER. REFERENCE CITY AND COUNTY OF DENVER DEPARTMENT OF PUBLIC WORKS FOR STANDARD DWGS & DETAILS FOR CONCRETE PAVEMENT, PAVEMENT JOINTS, REINFORCEMENT, AND SEALANTS.
3. CONTRACTOR SHALL PROVIDE ISOLATION JOINTS AT ALL WALLS, BUILDINGS, AND AS DIRECTED BY OWNER'S REPRESENTATIVE UNLESS OTHERWISE INDICATED.
4. SUBGRADE SHALL BE AT OR WITHIN 2% MAX. ABOVE OPTIMUM MOISTURE CONTENT (OMC) PRIOR TO PROOF ROLLING, & MUST REMAIN AT OR WITHIN 2% ABOVE OMC UNTIL CONCRETE IS PLACED. REFERENCE GEOTECHNICAL REPORT FOR MORE INFORMATION.

CONCRETE PAVING - VEHICULAR
1" = 1'-0"

NOTE:
1. REFERENCE & COMPLY WITH CITY & COUNTY OF DENVER TRANSPORTATION STANDARDS & DETAILS.

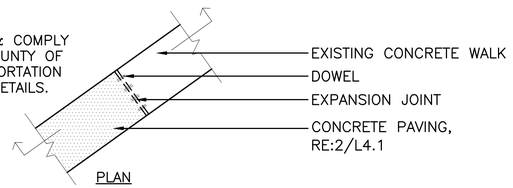

PLAN

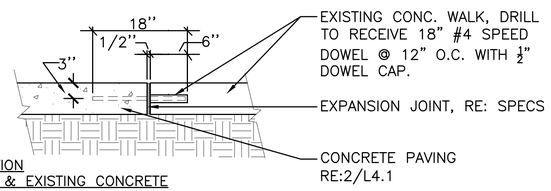

SECTION
NEW & EXISTING CONCRETE

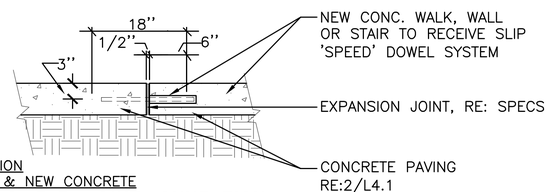

SECTION
NEW & NEW CONCRETE

TYPE EXPANSION JOINT CONNECTION
1" = 1'-0"

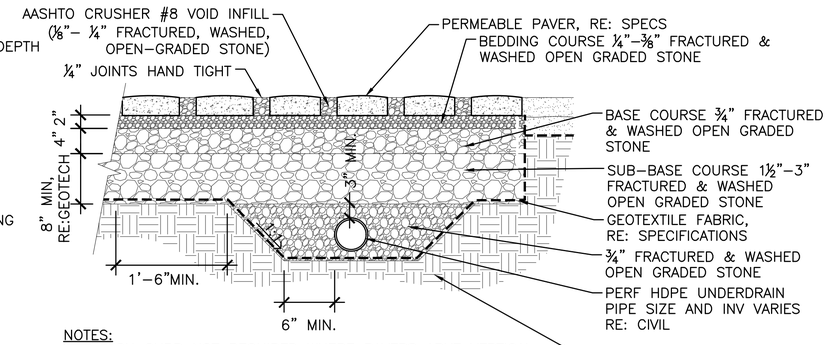

NOTES:
1. FLUSH CURB NOT REQUIRED WHERE PAVERS ABUT VERTICAL CURB AND GUTTER, CONCRETE PAVING, PLANTERS OR BUILDINGS.
2. PIPE DEPTH VARIES. MAY BE DEEPER THAN SHOWN REQUIRING MORE GRAVEL. SEE CIVIL FOR INVERTS AND PIPE SIZE.

CONCRETE UNIT PAVER - PERMEABLE
1" = 1'-0"

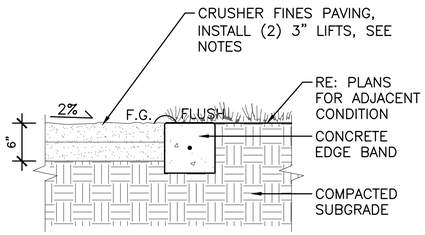

CRUSHER FINES AT PLANTING EDGE

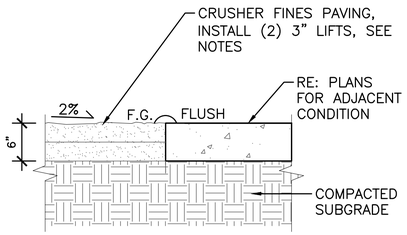

CRUSHER FINES AT PAVING

NOTES:
1. CRUSHER FINES PAVING SHALL BE PLACED IN (2) 3" LIFTS MIN.
2. REFER TO PLANS & SPECIFICATIONS FOR FINISHES.
3. INSTALL CRUSHER FINES PAVING FLUSH WITH ADJACENT HARDSCAPE, TYP.
4. IN AREAS ADJACENT TO TURF, INSTALL CRUSHER FINES PAVING 1/2" HIGHER THAN FINISH GRADE, TYP. WITH SHARP, STRAIGHT EDGE.
5. REFER TO SPEC PRODUCT/INSTALLATION INFO.

PERIMETER PAVING
1" = 1'-0"

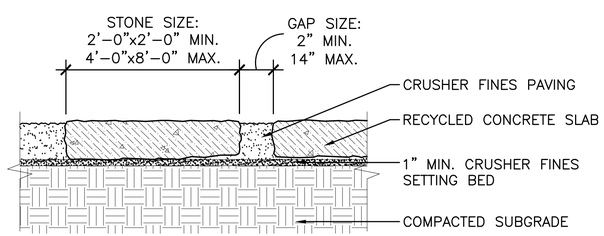

SECTION

NOTE:
1. REBAR SHALL BE REMOVED OR CUT AND GROUND FLUSH WITH FACE OF CONCRETE SLAB.
2. INSTALL RECYCLED CONCRETE SLAB FLAT SIDE UP.
3. RECYCLED CONCRETE SLAB PAVING SHALL BE FLUSH WITH SURROUNDING GRADE.
4. SLOPE ALL CONCRETE SLAB PAVING TO DRAIN.
5. FIELD VERIFY LOCATION OF ALL CONCRETE SLAB PAVING LIMITS AND LOCATIONS WITH OWNER'S REP. PRIOR TO CONSTRUCTION. THE CONTRACTOR SHALL EXPECT MINOR FIELD MODIFICATIONS TO LAYOUT BY OWNER'S REP.

REUSE CONCRETE AS PAVING
1" = 1'-0"

CONCRETE THICKENED EDGE
1" = 1'-0"

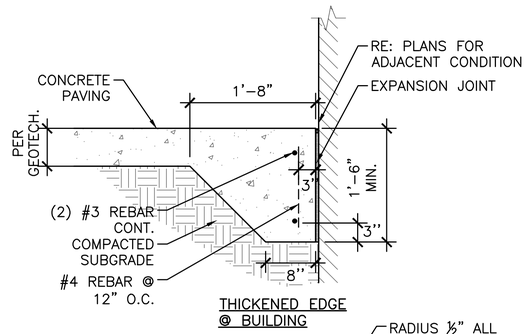

THICKENED EDGE @ BUILDING

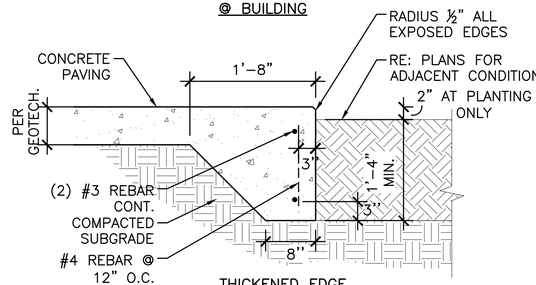

THICKENED EDGE

NOTE:
1. REFER TO CIVIL FOR SUBGRADE DEPTH AND UTILITIES.

CONCRETE THICKENED EDGE
1" = 1'-0"

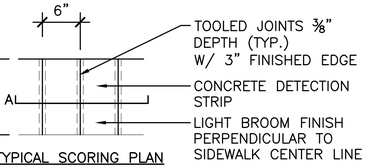

SECTION A

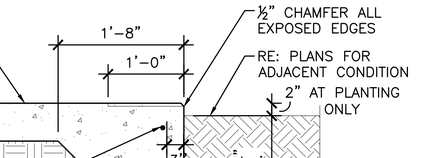

TYPICAL SCORING PLAN

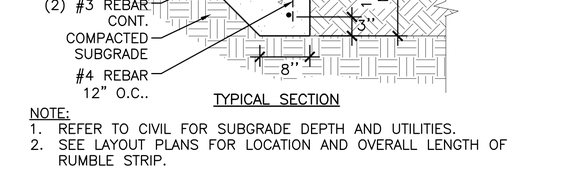

TYPICAL SECTION

NOTE:
1. REFER TO CIVIL FOR SUBGRADE DEPTH AND UTILITIES.
2. SEE LAYOUT PLANS FOR LOCATION AND OVERALL LENGTH OF RUMBLE STRIP.

CONCRETE THICKENED EDGE WITH EDGETION
1" = 1'-0"

wenk
ASSOCIATES
PLANNERS & LANDSCAPE ARCHITECTS
303.628.0003

DENVER
THE MILE HIGH CITY

RIVER NORTH PARK
DENVER, COLORADO

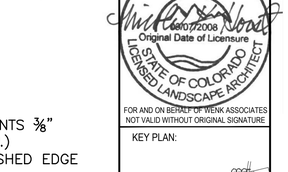

FOR AND ON BEHALF OF WENK ASSOCIATES
NOT VALID WITHOUT ORIGINAL SIGNATURE

KEY PLAN:

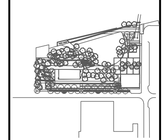

REVISIONS:
NAME DATE

DRAWN BY:
BP/TS

REVIEWED BY:
NH

PROJECT NUMBER:
15014

DATE:
OCTOBER 2018

ISSUE:
BID SET

SHEET TITLE:
LANDSCAPE DETAILS

SHEET NUMBER:
L4.1

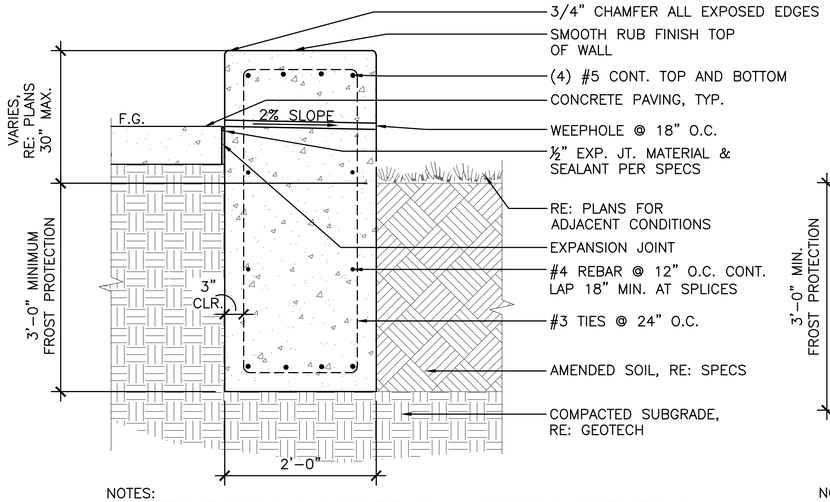

NOTES:
1. REFERENCE GRADING PLAN FOR TOP OF WALL ELEVATIONS. CONTRACTOR SHALL VERIFY WALL ELEVATIONS WITH OWNER'S REPRESENTATIVE PRIOR TO CONSTRUCTION.
2. FOOTER MINIMUM DEPTH TO EXTEND TO FROST DEPTH.
4. TOP OF WALLS AND VERTICAL FACES TO RECEIVE SMOOTH RUB CONCRETE FINISH.
5. TOP OF WALL TO REMAIN LEVEL
6. SAW CUT CONTROL JOINTS TO BE 1/8" WIDTH W/ 3/8" CUT DEPTH 5' O.C.
7. ALL VERTICAL AND HORIZONTAL EDGES OF CONCRETE TO INCLUDE ¾" CHAMFER.
8. ALL FACES SMOOTH RUB FINISH.

CONCRETE SEAT WALL
1" = 1'-0"

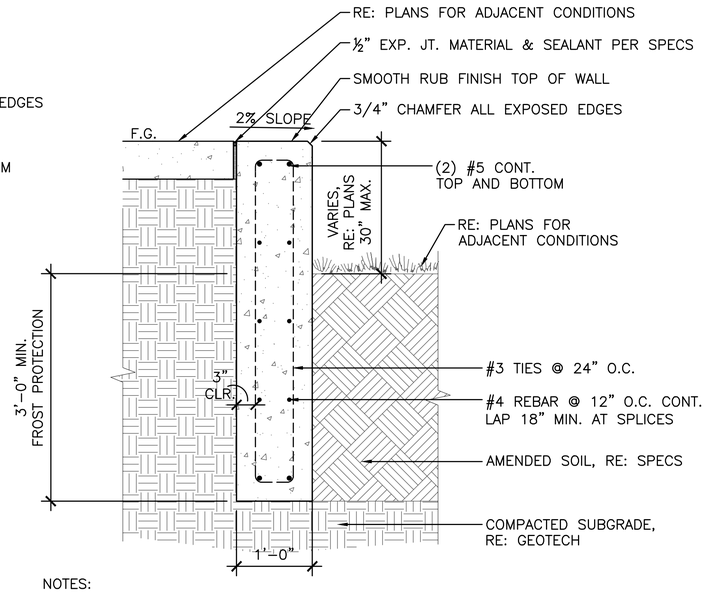

NOTES:
1. REFERENCE GRADING PLAN FOR TOP OF WALL ELEVATIONS. CONTRACTOR SHALL VERIFY WALL ELEVATIONS WITH OWNER'S REPRESENTATIVE PRIOR TO CONSTRUCTION.
2. FOOTER MINIMUM DEPTH TO EXTEND TO FROST DEPTH.
4. TOP OF WALLS AND VERTICAL FACES TO RECEIVE SMOOTH RUB CONCRETE FINISH.
5. TOP OF WALL TO REMAIN LEVEL
6. SAW CUT CONTROL JOINTS TO BE 1/8" WIDTH W/ 3/8" CUT DEPTH 5' O.C.
7. ALL VERTICAL AND HORIZONTAL EDGES OF CONCRETE TO INCLUDE ¾" CHAMFER.
8. ALL FACE SMOOTH RUB FINISH.

CONCRETE RETAINING WALL
1" = 1'-0"

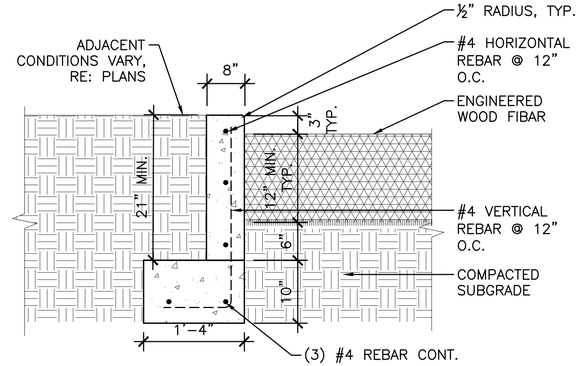

CONCRETE VERTICAL WALL
1" = 1'-0"

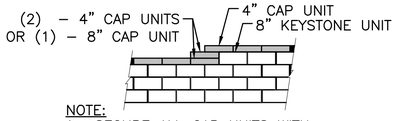

NOTE:
1. SECURE ALL CAP UNITS WITH KEYSTONE KAPSEAL OR EQUAL.

TOP OF WALL STEPS

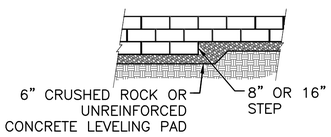

NOTE:
1. THE LEVELING PAD IS TO BE CONSTRUCTED OF CRUSHED STONE OR 2000 PSI ± UNREINFORCED CONCRETE.

ELEVATION

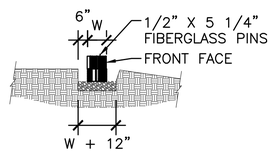

SECTION LEVELING PAD DETAIL

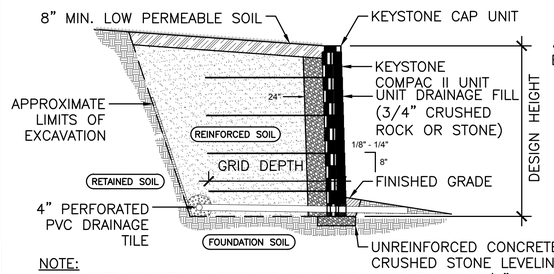

NOTE:
WHEN SITE CONDITIONS REQUIRE, WRAP DRAINAGE TILE IN 3/4" AGGREGATE AND FILTER FABRIC WITH DRAINAGE COMPOSITE OR AGGREGATE BACK DRAIN SYSTEM, AS DIRECTED BY GEOTECHNICAL ENGINEER.

TYPICAL REINFORCED WALL SECTION
COMPAC II UNIT – NEAR VERTICAL SETBACK

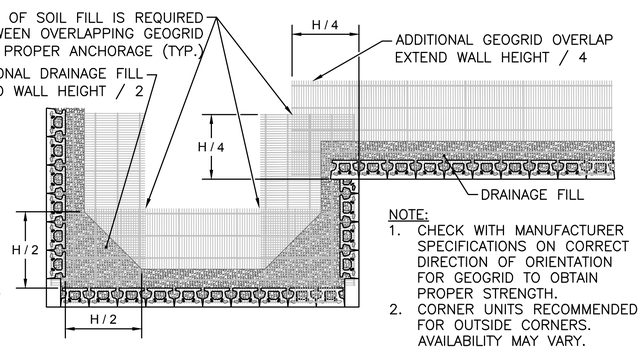

GEOGRID INSTALLATION AT CORNERS

NOTE:
1. CHECK WITH MANUFACTURER SPECIFICATIONS ON CORRECT DIRECTION OF ORIENTATION FOR GEOGRID TO OBTAIN PROPER STRENGTH.
2. CORNER UNITS RECOMMENDED FOR OUTSIDE CORNERS. AVAILABILITY MAY VARY.

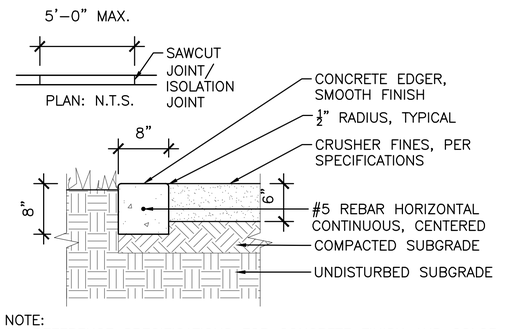

NOTE:
1. REFERENCE SPECIFICATIONS FOR CONCRETE FINISH AND COLOR.

MISCELLANEOUS DETAILS
1" = 1'-0"

CONCRETE PAN
1" = 1'-0"

NOTE:
1. MSE WALL TO BE SUPPLIED BY KEYSTONE RETAINING WALL SYSTEMS OR APPROVED EQUAL.
2. CONTRACTOR SHALL PROVIDE SHOP DRAWINGS OF MSE RETAINING WALL SYSTEM AND DRAINAGE CONNECTIONS FOR APPROVAL BY OWNER'S REPRESENTATIVE PRIOR TO CONSTRUCTION.
3. REFERENCE ARCHITECTURAL DRAWINGS FOR EEB WATERPROOFING, INSULATION, SEALANT, AND FLASHING INFORMATION.

wenk
ASSOCIATES
PLANNERS & LANDSCAPE ARCHITECTS
303.628.0003

DENVER
THE MILE HIGH CITY

RIVER NORTH PARK
DENVER, COLORADO

NICOLE K. HORST 626
Original Date of Licensure 08/07/2008
STATE OF COLORADO
LICENSED LANDSCAPE ARCHITECT
FOR AND ON BEHALF OF WENK ASSOCIATES
NOT VALID WITHOUT ORIGINAL SIGNATURE

KEY PLAN:

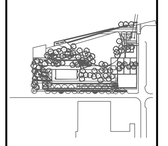

REVISIONS:
NAME DATE

DRAWN BY:
BP/TS

REVIEWED BY:
NH

PROJECT NUMBER:
15014

DATE:
OCTOBER 2018

ISSUE:
BID SET

SHEET TITLE:
LANDSCAPE DETAILS

SHEET NUMBER:
L4.2

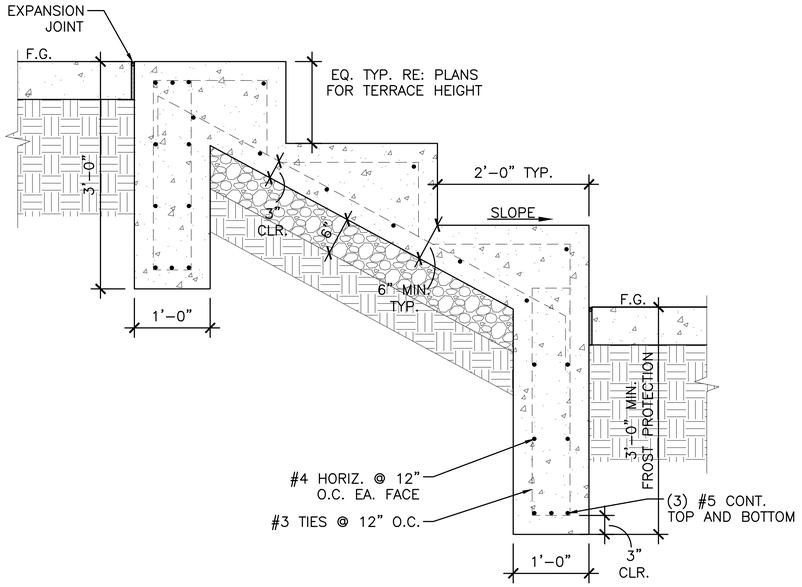

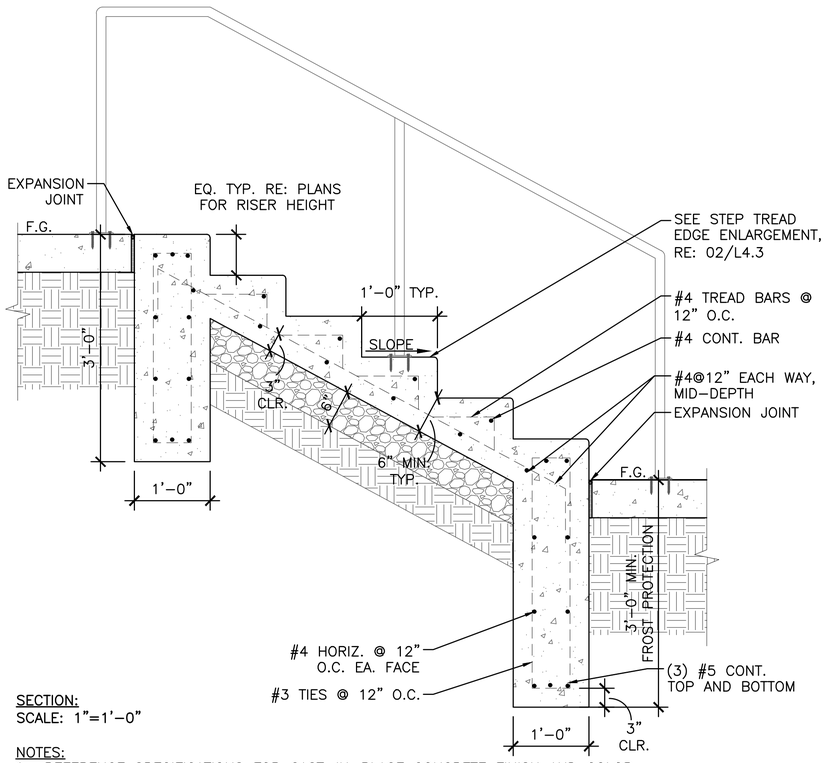

SECTION:
SCALE: 1"=1'-0"

NOTES:
1. REFERENCE SPECIFICATIONS FOR CAST-IN-PLACE CONCRETE FINISH AND COLOR.
2. SEE GRADING PLANS AND SECTIONS FOR MORE INFORMATION.
3. STAIR CONSTRUCTION AND DIMENSIONING SHALL MEET ALL APPLICABLE CODES PER IBC, LATEST EDITION.
4. STAIR CONSTRUCTION AND DIMENSIONS SHALL MEET ALL CURRENT DENVER PARKS STANDARDS.

CONCRETE STEP TO TERRACE MAKER PAD

1" = 1'-0"

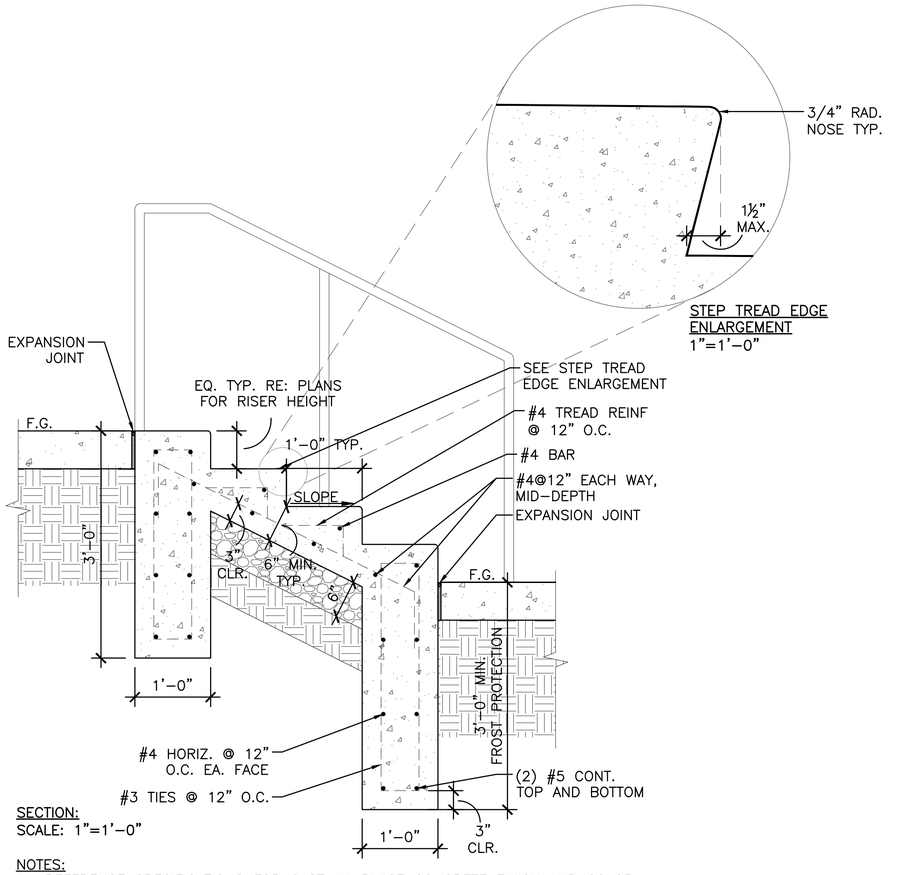

SECTION:
SCALE: 1"=1'-0"

NOTES:
1. REFERENCE SPECIFICATIONS FOR CAST-IN-PLACE CONCRETE FINISH AND COLOR.
2. SEE GRADING PLANS AND SECTIONS FOR MORE INFORMATION.
3. STAIR CONSTRUCTION AND DIMENSIONING SHALL MEET ALL APPLICABLE CODES PER IBC, LATEST EDITION.
4. STAIR CONSTRUCTION AND DIMENSIONS SHALL MEET ALL CURRENT DENVER PARKS STANDARDS.

CONCRETE STEP TO TERRACE

1" = 1'-0"

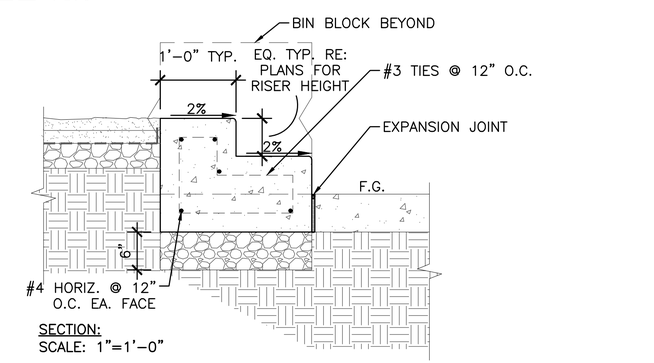

SECTION:
SCALE: 1"=1'-0"

NOTES:
1. REFERENCE SPECIFICATIONS FOR CAST-IN-PLACE CONCRETE FINISH AND COLOR.
2. SEE GRADING PLANS AND SECTIONS FOR MORE INFORMATION.
3. STAIR CONSTRUCTION AND DIMENSIONING SHALL MEET ALL APPLICABLE CODES PER IBC, LATEST EDITION.
4. STAIR CONSTRUCTION AND DIMENSIONS SHALL MEET ALL CURRENT DENVER PARKS STANDARDS.

CONCRETE RETAINER

1" = 1'-0"

wenk
ASSOCIATES
PLANNERS & LANDSCAPE ARCHITECTS
303.628.0003

DENVER
THE MILE HIGH CITY

RIVER NORTH PARK
DENVER, COLORADO

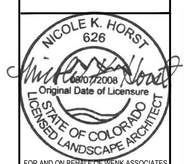

FOR AND ON BEHALF OF WENK ASSOCIATES
NOT VALID WITHOUT ORIGINAL SIGNATURE

KEY PLAN:

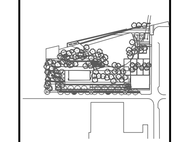

REVISIONS:

NAME	DATE

DRAWN BY: BP/TS

REVIEWED BY: NH

PROJECT NUMBER: 15014

DATE: **OCTOBER 2018**

ISSUE: BID SET

SHEET TITLE: LANDSCAPE DETAILS

SHEET NUMBER: L4.3

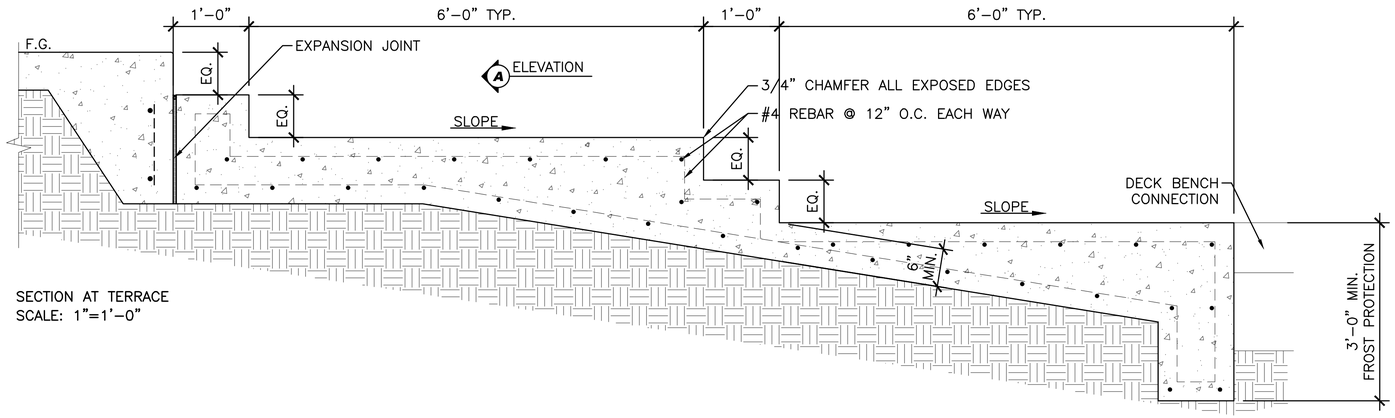

SECTION AT TERRACE
SCALE: 1"=1'–0"

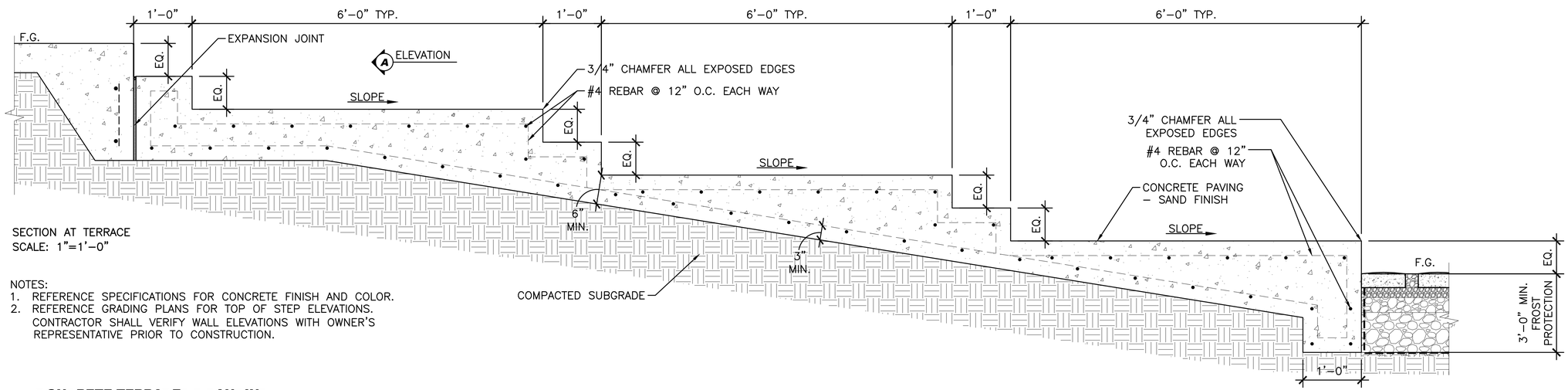

SECTION AT TERRACE
SCALE: 1"=1'–0"

NOTES:
1. REFERENCE SPECIFICATIONS FOR CONCRETE FINISH AND COLOR.
2. REFERENCE GRADING PLANS FOR TOP OF STEP ELEVATIONS. CONTRACTOR SHALL VERIFY WALL ELEVATIONS WITH OWNER'S REPRESENTATIVE PRIOR TO CONSTRUCTION.

CONCRETE TERRACE AND IN
1" = 1'-0"

wenk
ASSOCIATES
PLANNERS & LANDSCAPE ARCHITECTS
303.628.0003

DENVER
THE MILE HIGH CITY

RIVER NORTH PARK
DENVER, COLORADO

NICOLE K. HORST
626
08/07/2008
Original Date of Licensure
STATE OF COLORADO
LICENSED LANDSCAPE ARCHITECT
FOR AND ON BEHALF OF WENK ASSOCIATES
NOT VALID WITHOUT ORIGINAL SIGNATURE

KEY PLAN:

REVISIONS:
NAME DATE

DRAWN BY:
BP/TS

REVIEWED BY:
NH

PROJECT NUMBER:
15014

DATE:
OCTOBER 2018

ISSUE:
BID SET

SHEET TITLE:
LANDSCAPE DETAILS

SHEET NUMBER:
L4.4

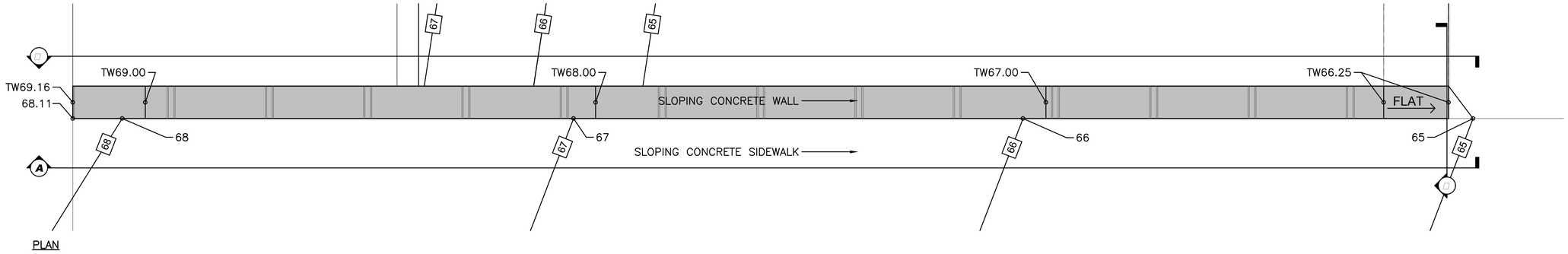

PLAN

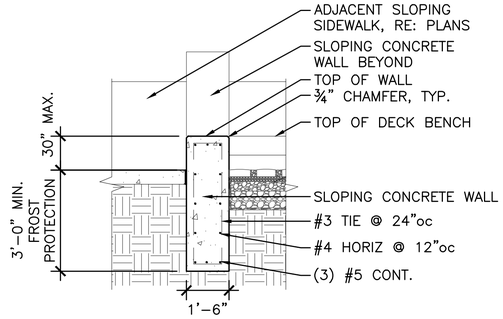

SECTION 1

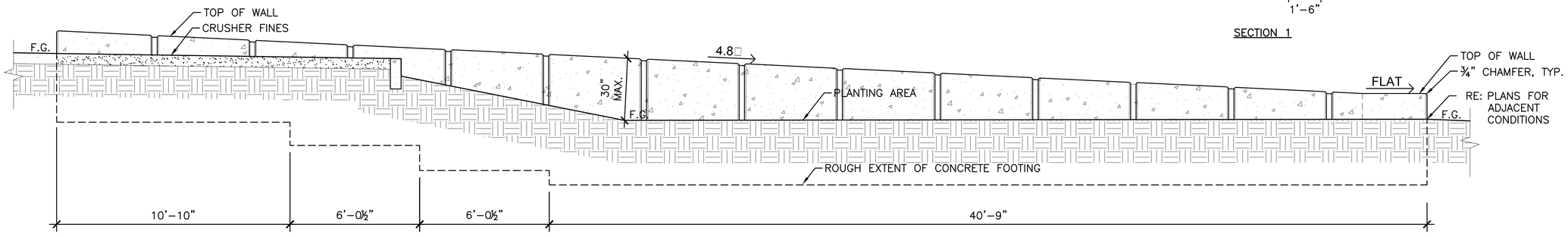

ELEVATION B

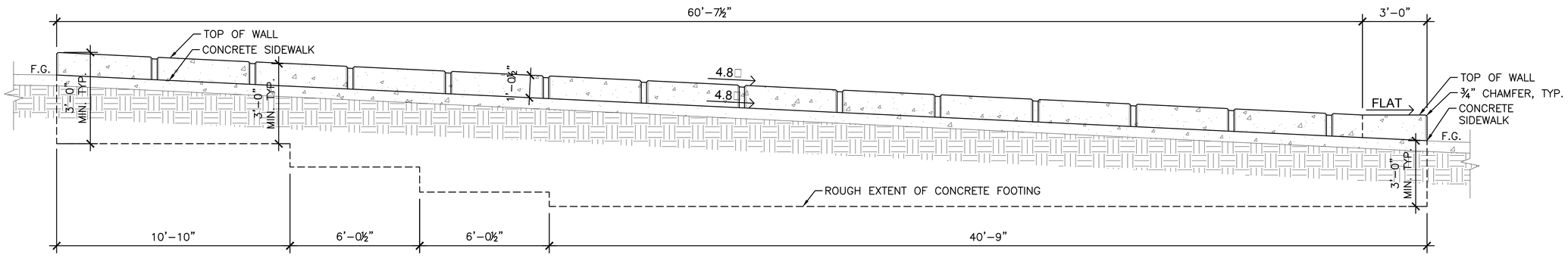

ELEVATION A

NOTES:
1. REFERENCE SPECIFICATIONS FOR CONCRETE FINISH AND COLOR.
2. REFERENCE GRADING PLAN FOR TOP OF WALL ELEVATIONS. CONTRACTOR SHALL VERIFY WALL ELEVATIONS WITH OWNER'S REPRESENTATIVE PRIOR TO CONSTRUCTION.
3. ALL VERTICAL AND HORIZONTAL EDGES OF CONCRETE TO INCLUDE 3/4" CHAMFER.

□□ □ON□RETE □□OPE□ □ A□□ □ □AN□IN□
3/8" □ 1'-0"

wenk
ASSOCIATES
PLANNERS & LANDSCAPE ARCHITECTS
303.628.0003

DENVER
THE MILE HIGH CITY

RIVER NORTH PARK
DENVER, COLORADO

NICOLE K. HORST
626
08/07/2008
Original Date of Licensure
STATE OF COLORADO
LICENSED LANDSCAPE ARCHITECT
FOR AND ON BEHALF OF WENK ASSOCIATES
NOT VALID WITHOUT ORIGINAL SIGNATURE

KEY PLAN:

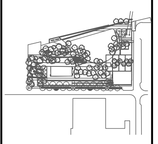

REVISIONS:
NAME DATE

DRAWN BY:
BP/TS

REVIEWED BY:
NH

PROJECT NUMBER:
15014

DATE:
OCTOBER 2018

ISSUE:
BID SET

SHEET TITLE:
LANDSCAPE DETAILS

SHEET NUMBER:
L4.5

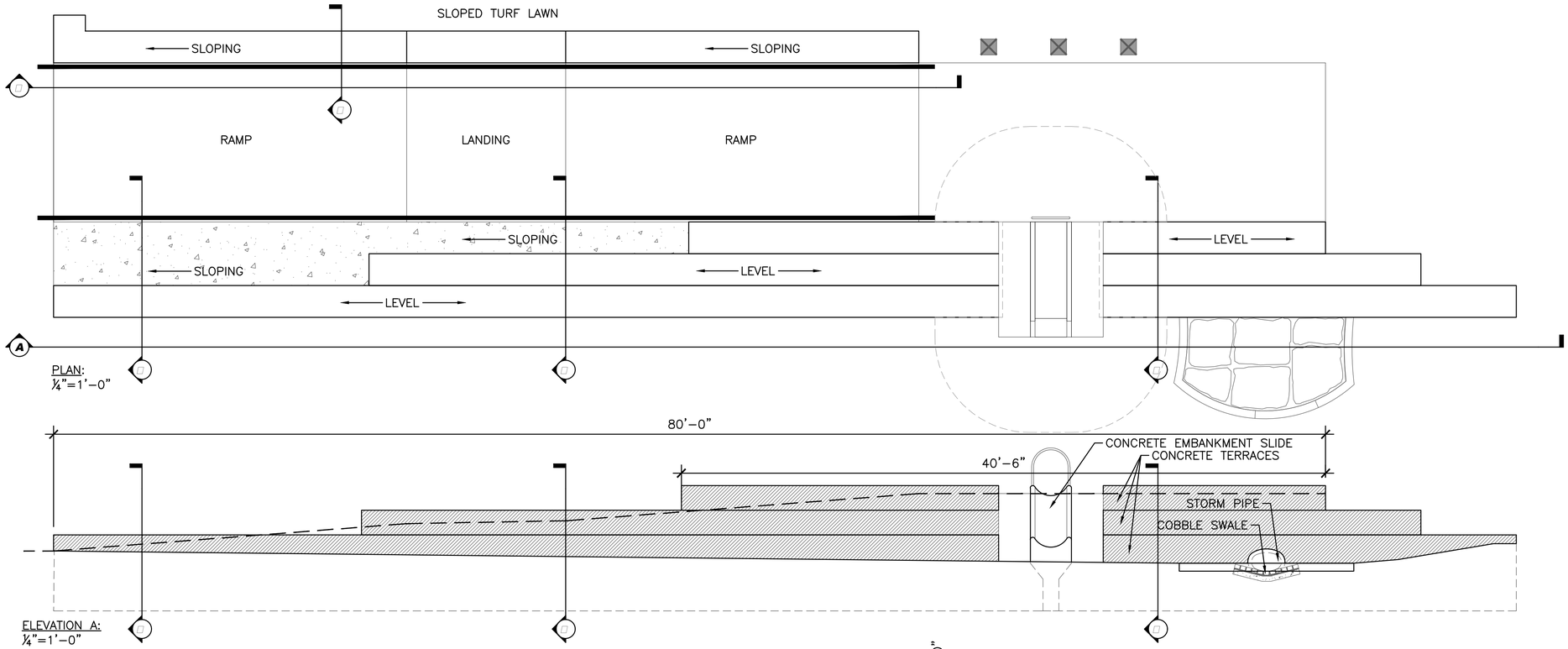

PLAN:
¼"=1'–0"

ELEVATION A:
¼"=1'–0"

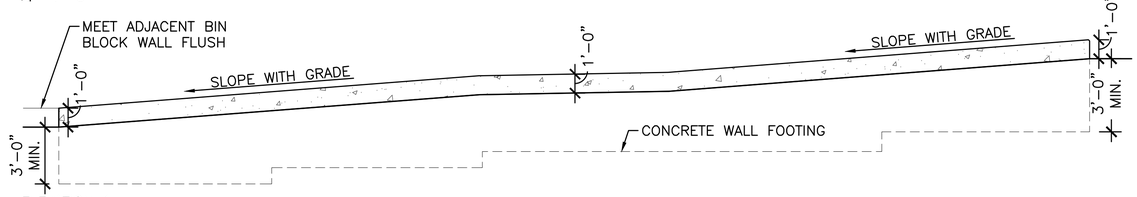

ELEVATION 1:
¼"=1'–0"

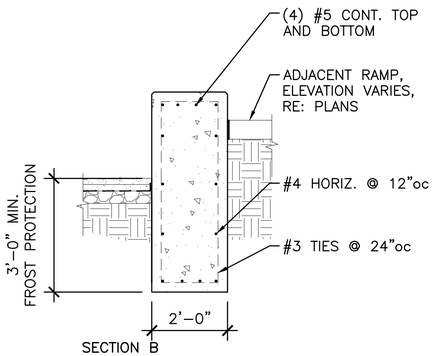

SECTION B
SCALE: 1/2"=1'–0"

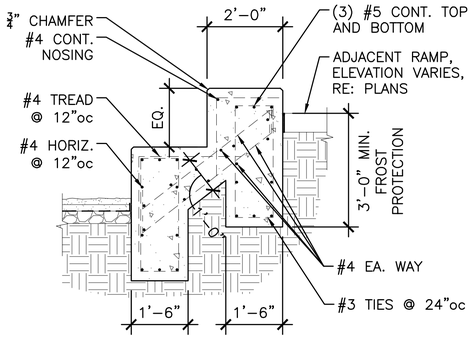

SECTION C
SCALE: 1/2"=1'–0"

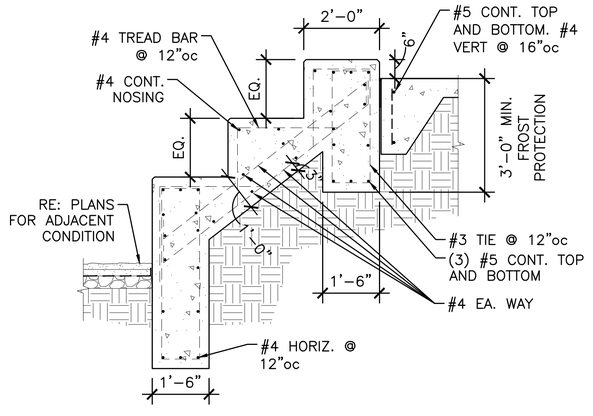

SECTION D
SCALE: 1/2"=1'–0"

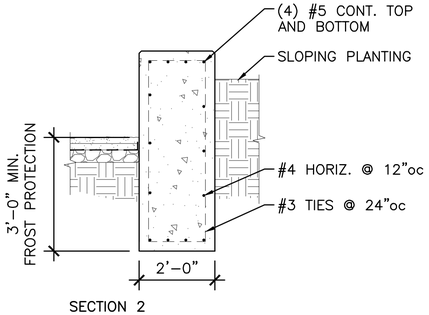

SECTION 2
SCALE: 1/2"=1'–0"

NOTES:
1. ALL FACES SMOOTH RUB FINISH
2. REFERENCE GRADING PLANS FOR TOP OF STEP ELEVATIONS. CONTRACTOR SHALL VERIFY WALL ELEVATIONS WITH OWNER'S REPRESENTATIVE PRIOR TO CONSTRUCTION.
3. ALL VERTICAL AND HORIZONTAL EDGES OF CONCRETE TO INCLUDE 3/4" CHAMFER.

CONCRETE TERRACE RAMP PAD AREA
AS SHOWN

wenk
ASSOCIATES
PLANNERS & LANDSCAPE ARCHITECTS
303.628.0003

DENVER
THE MILE HIGH CITY

RIVER NORTH PARK
DENVER, COLORADO

NICOLE K. HORST
626
10/07/2008
Original Date of Licensure
STATE OF COLORADO
LICENSED LANDSCAPE ARCHITECT
FOR AND ON BEHALF OF WENK ASSOCIATES
NOT VALID WITHOUT ORIGINAL SIGNATURE

KEY PLAN:

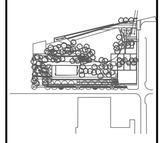

REVISIONS:
NAME DATE

DRAWN BY:
BP/TS

REVIEWED BY:
NH

PROJECT NUMBER:
15014

DATE:
OCTOBER 2018

ISSUE:
BID SET

SHEET TITLE:
LANDSCAPE DETAILS

SHEET NUMBER:
L4.6

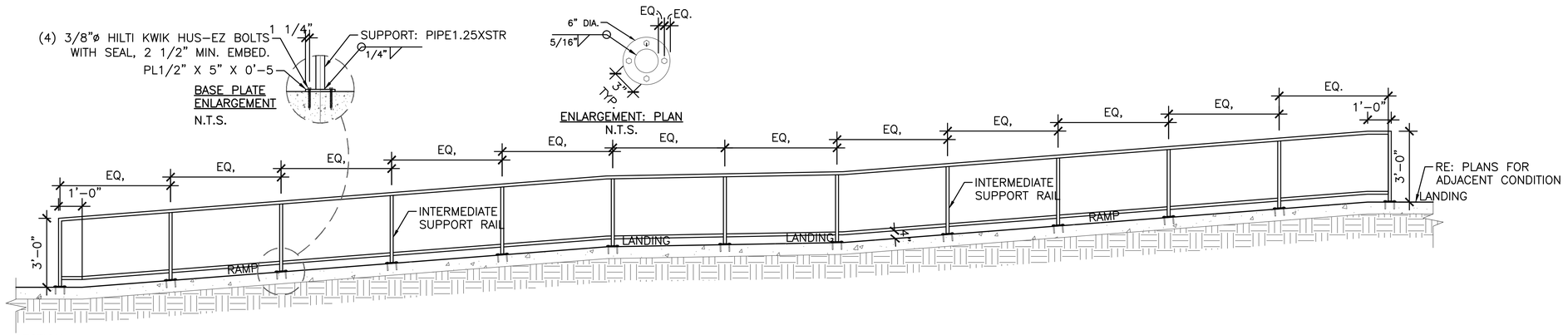

SECTION:
SCALE: 3/8"=1'-0"

NOTES:
1. REFERENCE HANDRAIL DETAIL FOR ADDITIONAL NOTES.
2. CONTRACTOR SHALL PROVIDE SHOP DRAWINGS OF RAIL AND CONNECTIONS FOR APPROVAL BY OWNER'S REPRESENTATIVE PRIOR TO CONSTRUCTION.
3. HANDRAIL SHALL BE LEVEL AND PLUMB.
4. HANDRAILS SHALL BE CONSTRUCTED IN ACCORDANCE WITH ALL APPLICABLE CODES AND STANDARDS.

HANDRAIL RAMP
1/2" = 1'-0"

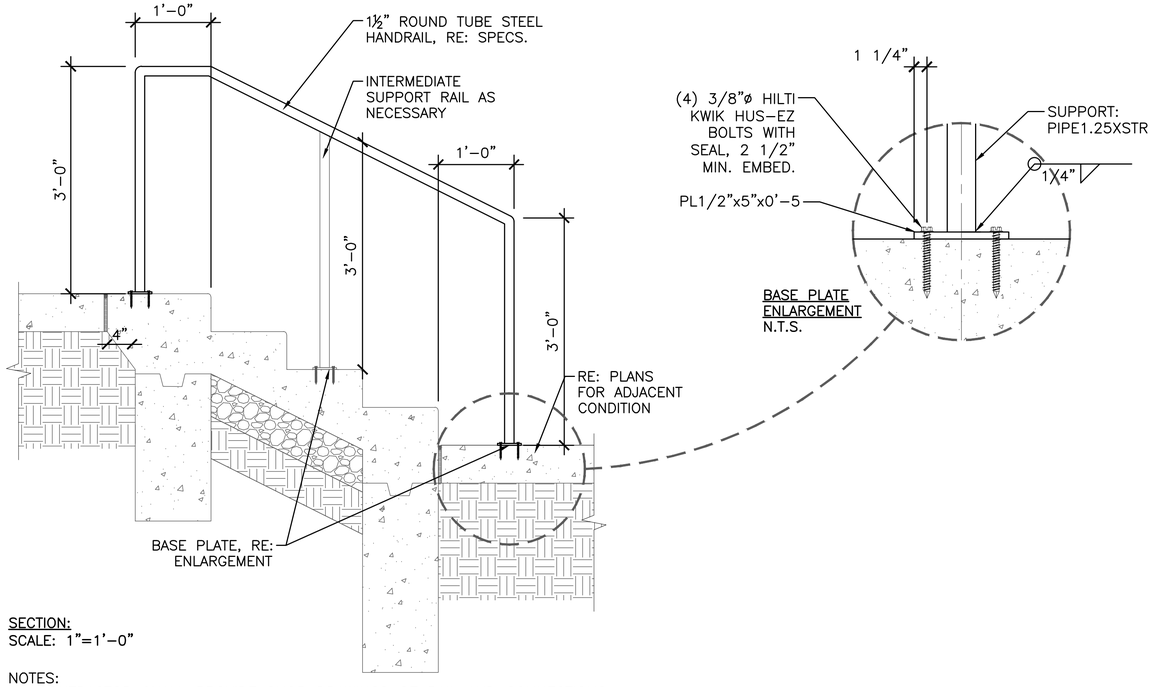

SECTION:
SCALE: 1"=1'-0"

NOTES:
1. CONTRACTOR SHALL PROVIDE SHOP DRAWINGS OF RAIL AND CONNECTIONS FOR APPROVAL BY OWNER'S REPRESENTATIVE PRIOR TO CONSTRUCTION.
2. HANDRAIL SHALL BE LEVEL AND PLUMB.
3. HANDRAILS SHALL BE CONSTRUCTED IN ACCORDANCE WITH ALL APPLICABLE CODES AND STANDARDS.
4. ALL RAILING SHALL BE PAINTED, SEE SPECIFICATIONS.

METAL HANDRAIL/STAIR
1" = 1'-0"

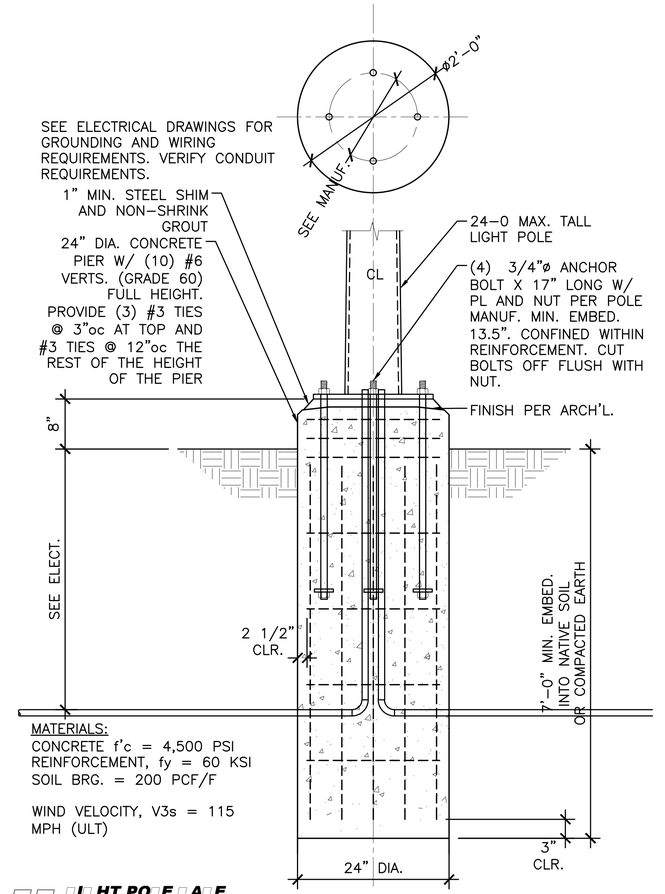

MATERIALS:
CONCRETE f'c = 4,500 PSI
REINFORCEMENT, fy = 60 KSI
SOIL BRG. = 200 PCF/F

WIND VELOCITY, V3s = 115 MPH (ULT)

LIGHT POLE BASE
1" = 1'-0"

wenk
ASSOCIATES
PLANNERS & LANDSCAPE ARCHITECTS
303.628.0003

DENVER
THE MILE HIGH CITY

RIVER NORTH PARK
DENVER, COLORADO

KEY PLAN:

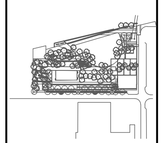

REVISIONS:
NAME DATE

DRAWN BY:
BP/TS

REVIEWED BY:
NH

PROJECT NUMBER:
15014

DATE:
OCTOBER 2018

ISSUE:
BID SET

SHEET TITLE:
LANDSCAPE DETAILS

SHEET NUMBER:
L4.7

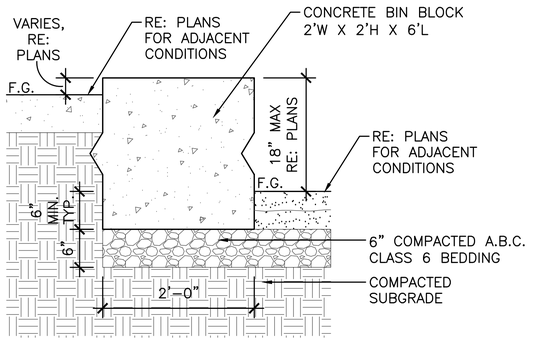

INLOOK BEAT A
1" = 1'-0"

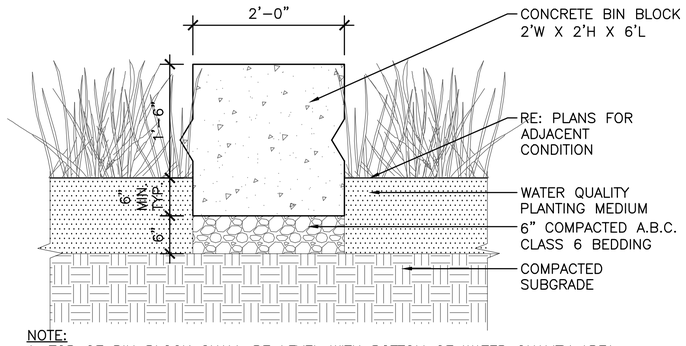

NOTE:
1. TOP OF BIN BLOCK SHALL BE LEVEL WITH BOTTOM OF WATER QUALITY AREA WHEN SET ON SLOPED TERRAIN.

INLOOK WATER QUALITY AREA
1" = 1'-0"

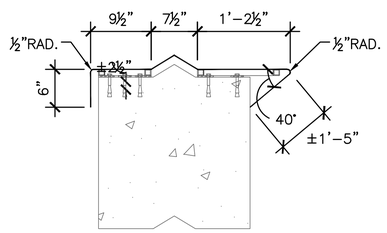

ENLARGEMENT: BENCH TOP
NTS

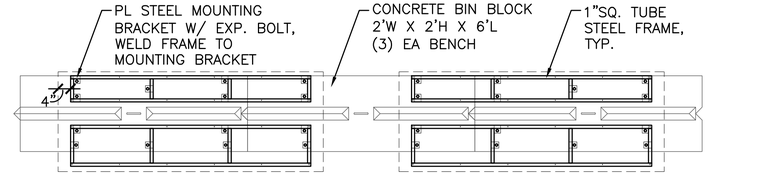

FRAMEWORK PLAN

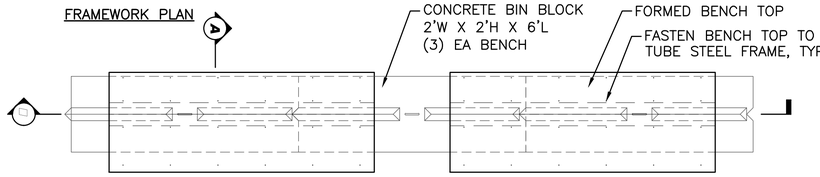

PLAN

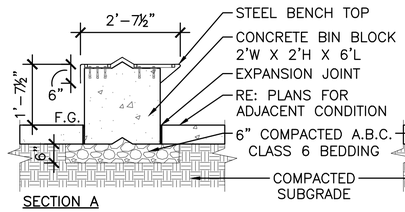

SECTION A

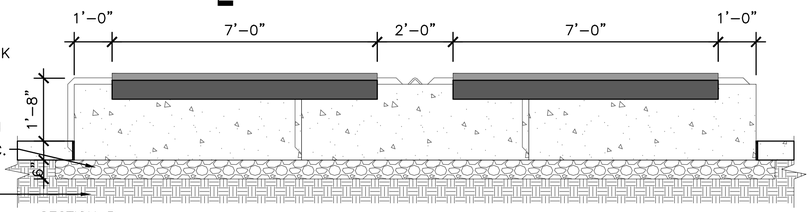

SECTION B

NOTES:
1. BENCH TOP TO BE SUPPLIED BY FORMS+SURFACES (NATE ERICKSON 720.234.5685) OR APPROVED EQUAL.
2. CONTRACTOR SHALL PROVIDE SHOP DRAWINGS OF MATERIALS, FRAMING & WELDS FOR APPROVAL BY OWNER'S REP. PRIOR TO CONSTRUCTION. DESIGN OF CONNECTIONS & WELDS BY FABRICATOR, UNLESS OTHERWISE NOTED.
3. DRAWINGS TO REFLECT DESIGN INTENT. CONTRACTOR SHALL DEVELOP PROPOSED FABRICATION UNIT SECTIONS AND INTERFACING CONNECTION, AND PROVIDE ALL NECESSARY ACCESSORIES, ATTACHMENTS, & WELDS.
4. ALL FENCING SHALL BE CONSTRUCTED IN ACCORDANCE WITH ALL APPLICABLE CODES AND STANDARDS.
5. CONTRACTOR SHALL GRIND AND SMOOTH EDGES TO MINIMIZE BURRS AND POINTS.
6. BENCH TOP SHALL BE LEVEL AND PLUMB.

INLOOK BENCH
1/2" = 1'-0"

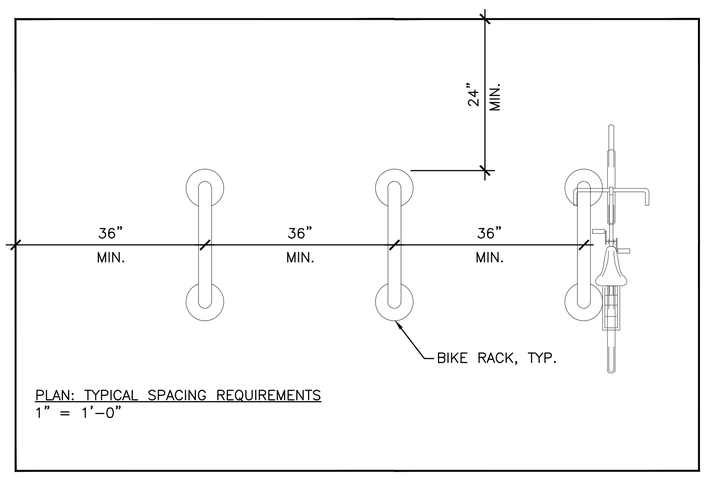

PLAN: TYPICAL SPACING REQUIREMENTS
1" = 1'-0"

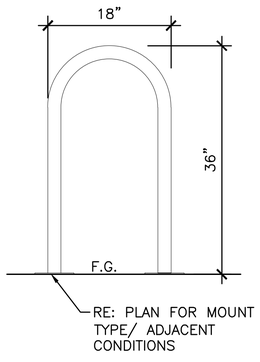

SECTION: TYPICAL DIMENSIONS
1" = 1'-0"

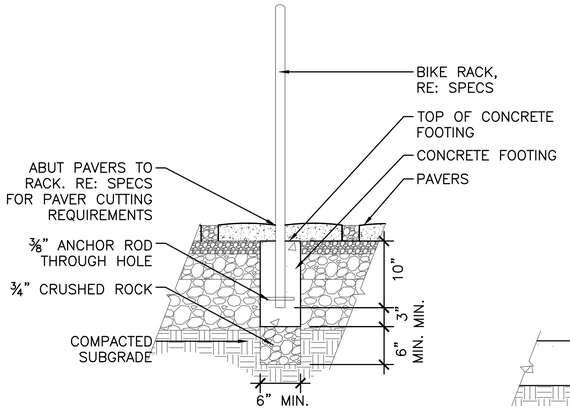

SECTION: RACK ON PAVERS
1" = 1'-0"

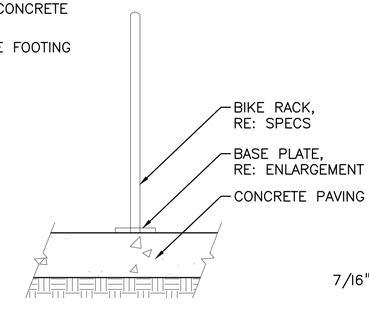

SECTION: RACK ON CONCRETE
1" = 1'-0"

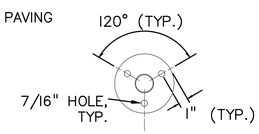

BASEPLATE ENLARGEMENT
N.T.S.

NOTES:
1. REFERENCE SPECIFICATIONS FOR MORE INFORMATION.
2. DIMENSIONS ARE SHOWN FOR REFERENCE ONLY AND REFLECT CURRENT CDOT AND CITY OF DENVER GUIDELINES. SUBMIT MANUFACTURER'S TECHNICAL DATA FOR APPROVAL.
3. MOUNTING METHODS ARE SHOWN FOR REFERENCE ONLY –INSTALL ACCORDING TO MANUFACTURER'S INSTRUCTIONS AND RECOMMENDATIONS.
4. COLOR SHALL BE PARKS STANDARD FEDERAL GREEN.

IERAK
1" = 1'-0"

wenk
ASSOCIATES
PLANNERS & LANDSCAPE ARCHITECTS
303.628.0003

DENVER
THE MILE HIGH CITY

RIVER NORTH PARK
DENVER, COLORADO

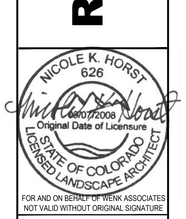

KEY PLAN:

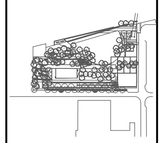

REVISIONS:
NAME DATE

DRAWN BY:
BP/TS

REVIEWED BY:
NH

PROJECT NUMBER:
15014

DATE:
OCTOBER 2018

ISSUE:
BID SET

SHEET TITLE:
LANDSCAPE DETAILS

SHEET NUMBER:
L4.8

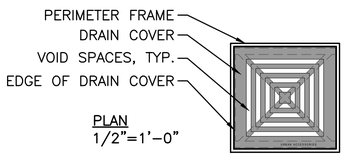

DRAIN COVER TYPE: URBAN ACCESSORIES
8" SQ. OPCB DRAIN COVER

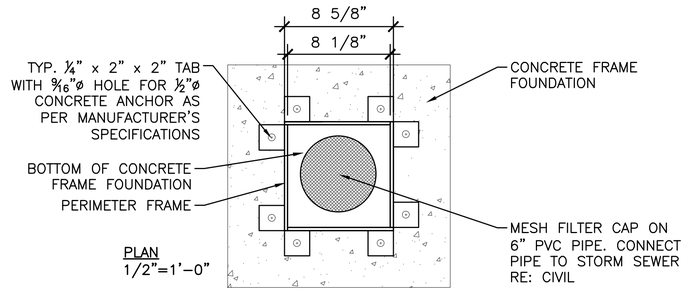

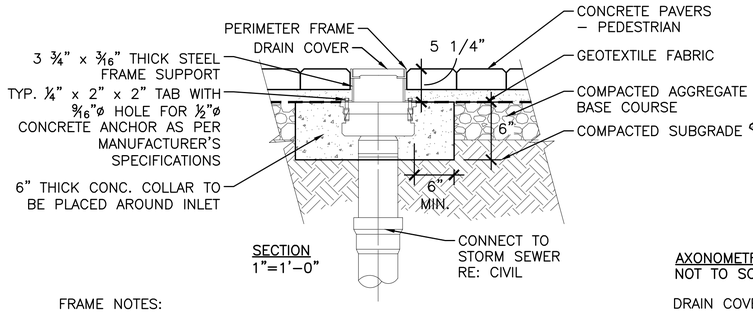

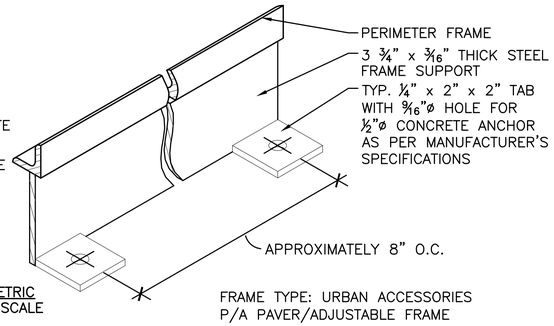

FRAME TYPE: URBAN ACCESSORIES
P/A PAVER/ADJUSTABLE FRAME

FRAME NOTES:
1. FRAMES ARE CONSTRUCTED OF MILD STEEL ASTM A36 ANGLE IRON OR OTHER SHAPES AS APPROVED.
2. ALL VISIBLE WELDS TO BE GROUND SMOOTH ON OUTSIDE EDGES.
3. FRAMES WILL BE TRUE TO SQUARE, OR DIAMETER AND SIZED WITHIN ⅛".
4. FINISH WILL BE NATURAL PATINA OF RAW STEEL.
5. DIMENSIONS ARE NOMINAL.
6. FRAME IS LOAD RATED FOR PEDESTRIAN TRAFFIC ONLY.
7. FOR ADDITIONAL INFORMATION REFERENCE SPECIFICATIONS.

DRAIN COVER NOTES:
1. CAST IN ONE PIECE, 1" THICK.
2. ALL DRAIN COVER OPENINGS TO MEET ADA REQUIREMENTS.
3. MATERIAL WILL BE HIGH QUALITY 100% RECYCLED GREY IRON, ASTM A48 CLASS 35B OR BETTER, HARDNESS 170–223 BRINNELL.
4. FINISH WILL BE NATURAL PATINA OF RAW CAST IRON.
5. CASTINGS WILL BE SQUARED AND FLAT, FREE OF BURRS, SLAG, AIR POCKETS, BLOW HOLES, FLASHING AND GRINDING OR WELDING ON EXPOSED SURFACES. EXCESSIVE WARPING OR SHRINKAGE IS NOT ACCEPTABLE.
6. DIMENSIONS SHOWN ARE NOMINAL.

P□A□A □RAIN
NTS

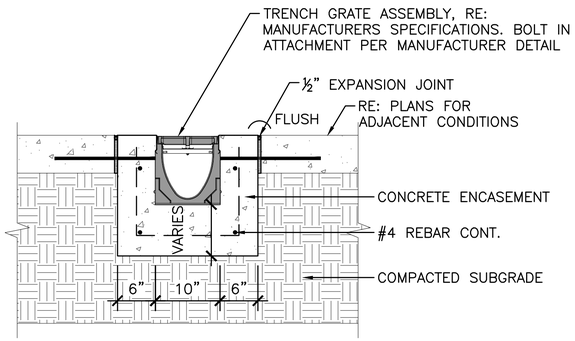

SECTION:
SCALE: 1"=1'-0"

NOTES:
1. CONTRACTOR SHALL REFERENCE SPECIFICATIONS FOR CONCRETE COLOR AND FINISH.
2. CONTRACTOR SHALL FIELD VERIFY LENGTH AND WIDTH OF TRENCH GRATE PRIOR TO ORDERING FABRICATION.
3. CONTRACTOR SHALL BE RESPONSIBLE FOR INSURING TRENCH GRATE IS INSTALLED IN ACCORDANCE WITH MANUFACTURER'S INSTRUCTIONS AND RECOMMENDATIONS.
4. CONTRACTOR TO PROVIDE SHOP DRAWINGS PRIOR TO INSTALLATION.
5. SLOPE TRENCH DRAIN TO DRAIN AS SHOWN IN GRADING AND LAYOUT SHEETS.
6. ASSURE POSITIVE DRAINAGE OUT FROM TRENCH GRATE

TREN□H □RAIN
1" □ 1'-0"

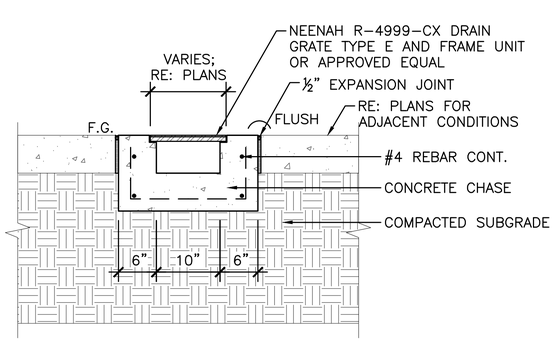

SECTION:
SCALE: 1"=1'-0"

NOTES:
1. CONTRACTOR SHALL REFERENCE SPECIFICATIONS FOR CONCRETE COLOR AND FINISH.
2. CONTRACTOR SHALL FIELD VERIFY LENGTH AND WIDTH OF CHASE DRAIN GRATE PRIOR TO ORDERING FABRICATION.
3. CONTRACTOR SHALL BE RESPONSIBLE FOR INSURING CHASE DRAIN GRATE IS INSTALLED IN ACCORDANCE WITH MANUFACTURER'S INSTRUCTIONS AND RECOMMENDATIONS.
4. CONTRACTOR TO PROVIDE SHOP DRAWINGS PRIOR TO INSTALLATION.
5. SLOPE CONCRETE CHASE TO DRAIN AS SHOWN IN GRADING AND LAYOUT SHEETS.
6. ASSURE POSITIVE DRAINAGE OUT FROM CHASE

□HA□E □RAIN
1" □ 1'-0"

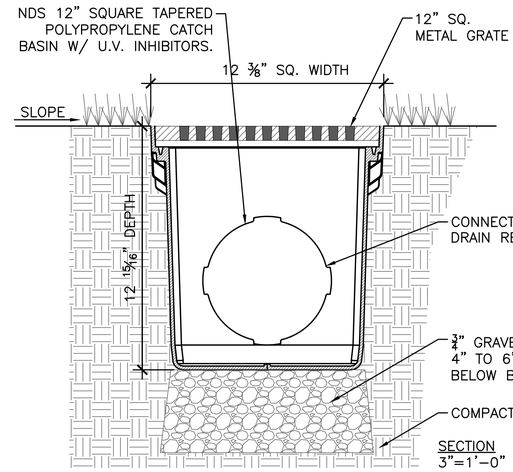

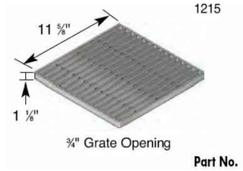

DRAIN COVER: NDS 12" SQUARE, HEAVY DUTY STEEL BAR GRATE. OPEN SURFACE 122.30 SQUARE INCHES. 160.21 GPM.

GRATE AXON
NTS

NOTES:
1. GRATE TO BE ATTACHED TO CATCH BASIN WITH SCREW PROVIDED AT TIME OF INSTALLATION.
2. INSTALL PER MANUFACTURER'S RECOMMENDATIONS.

□AN□□APE □RAIN
1" □ 1'-0"

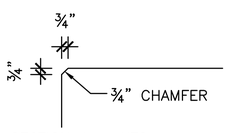

SECTION A – NTS
TERRACE CORNER

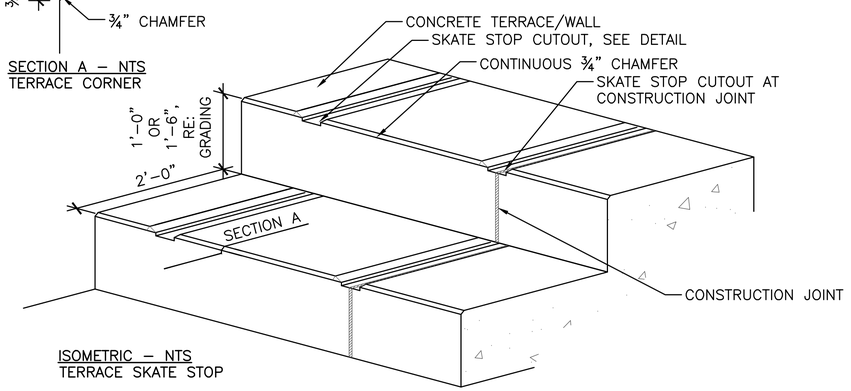

ISOMETRIC – NTS
TERRACE SKATE STOP

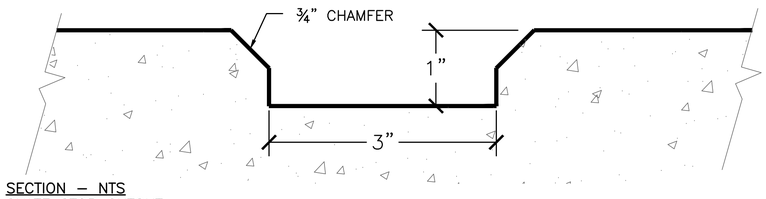

SECTION – NTS
SKATE STOP CUTOUT

NOTES:
1. REFERENCE LAYOUT PLANS FOR SKATE STOP AND CONSTRUCTION JOINT SPACING.
2. ALL CONCRETE TERRACE CONSTRUCTION JOINTS SHALL INCLUDE SKATE STOP CUTOUTS.
3. CONTRACTOR TO SUBMIT SHOP DRAWINGS FOR CONCRETE TERRACES, INCLUDING JOINTS, SPACING, AND SKATE STOP CUTOUTS.

□ON□RETE □OINT □□KATE □TOP
1" □ 1'-0"

wenk
ASSOCIATES
PLANNERS & LANDSCAPE ARCHITECTS
303.628.0003

DENVER
THE MILE HIGH CITY

RIVER NORTH PARK
DENVER, COLORADO

NICOLE K. HORST
626
10/07/2008
Original Date of Licensure
STATE OF COLORADO
LICENSED LANDSCAPE ARCHITECT
FOR AND ON BEHALF OF WENK ASSOCIATES
NOT VALID WITHOUT ORIGINAL SIGNATURE

KEY PLAN:

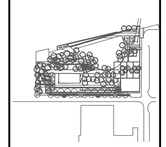

REVISIONS:
NAME DATE

DRAWN BY:
BP/TS

REVIEWED BY:
NH

PROJECT NUMBER:
15014

DATE:
OCTOBER 2018

ISSUE:
BID SET

SHEET TITLE:
LANDSCAPE DETAILS

SHEET NUMBER:
L4.9

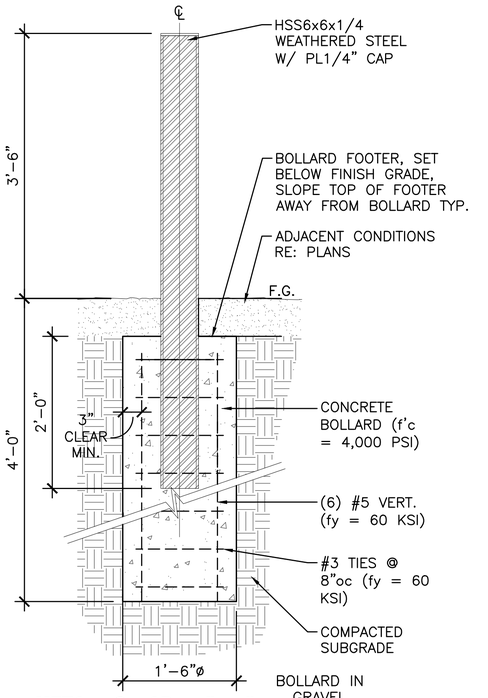

METAL BOLLARD 6" ROUND
1"=1'-0"

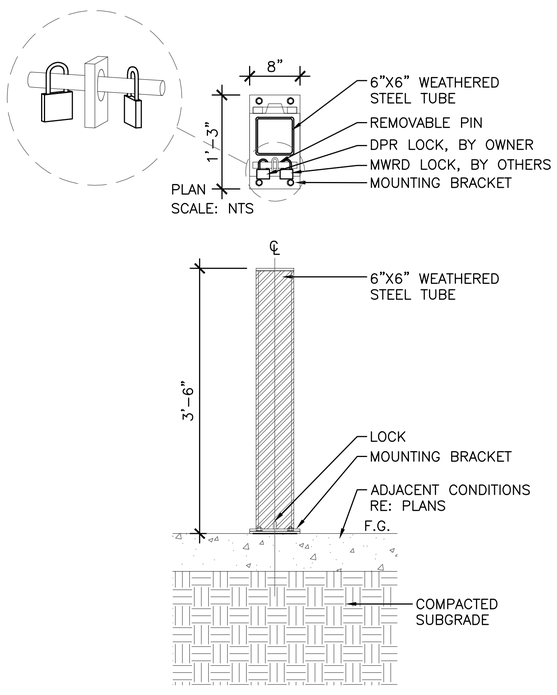

METAL BOLLARD 6" ROUND REMOVABLE
1"=1'-0"

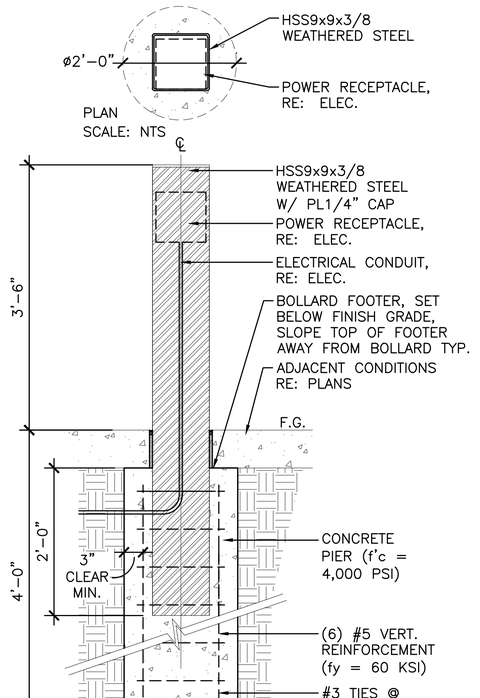

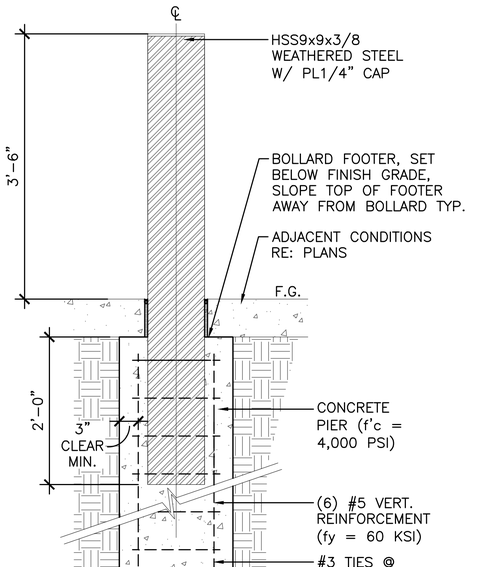

METAL BOLLARD 24" POWERED & NONPOWERED
1"=1'-0"

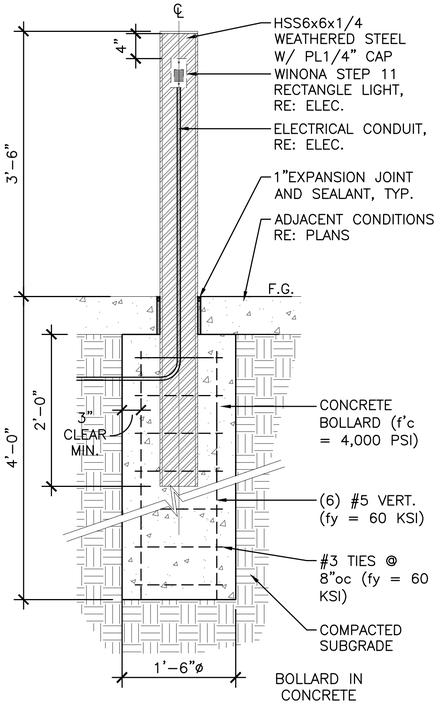

METAL BOLLARD 6" ROUND W/ LIGHT
1"=1'-0"

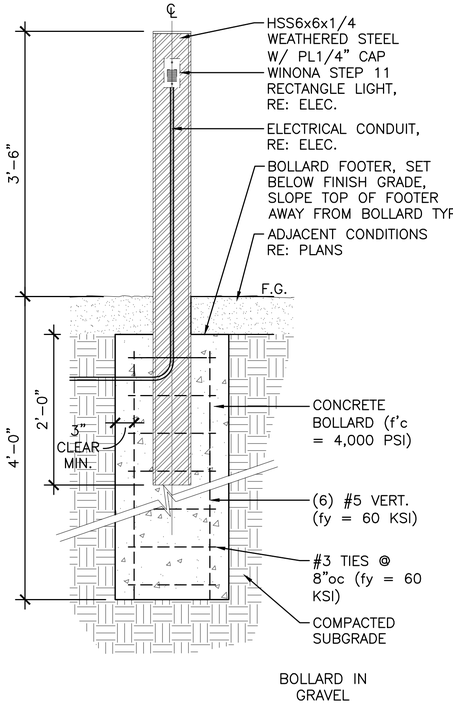

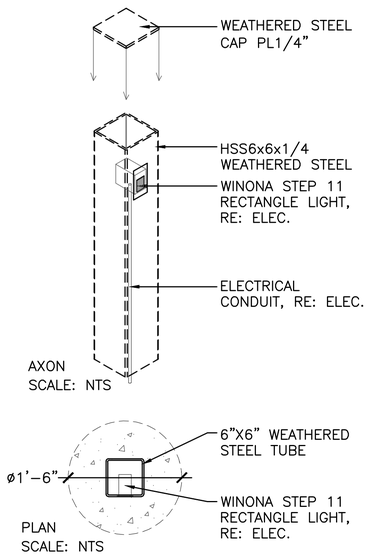

METAL BOLLARD 24" LIGHTED
1"=1'-0"

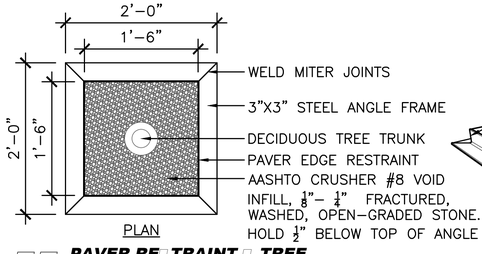

PAVER RESTRAINT AT TREE
NTS

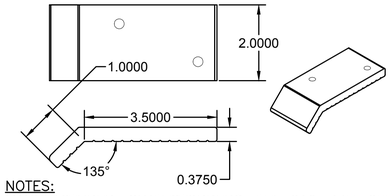

NOTES:
MANUFACTURER: SKATESTOPPERS; TEL 619-447-6374 (WWW.SKATESTOPPERS.COM)
PRODUCT: FA135 (FOR CHAMFER ¾" OR GREATER)
MATERIAL: 6061-T6 ALUMINUM
FINISH: HARD TUMBLE TO REMOVE ALL MACHINED AND/OR CUT EDGES. TYPE II CLEAR ANODIZE OR HARD ANODIZE.
ANCHORING: TWO OFFSET THRU HOLES FOR SMART PINS PLUS. USE ANCHORS IN CONJUNCTION WITH TWO-PART EPOXY

SKATE STOP
NTS

wenk
ASSOCIATES
PLANNERS & LANDSCAPE ARCHITECTS
303.628.0003

DENVER
THE MILE HIGH CITY

RIVER NORTH PARK
DENVER, COLORADO

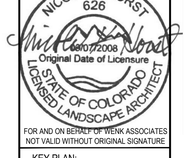

KEY PLAN:

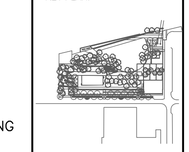

REVISIONS:
NAME DATE

DRAWN BY:
BP/TS

REVIEWED BY:
NH

PROJECT NUMBER:
15014

DATE:
OCTOBER 2018

ISSUE:
BID SET

SHEET TITLE:
LANDSCAPE DETAILS

SHEET NUMBER:
L4.10

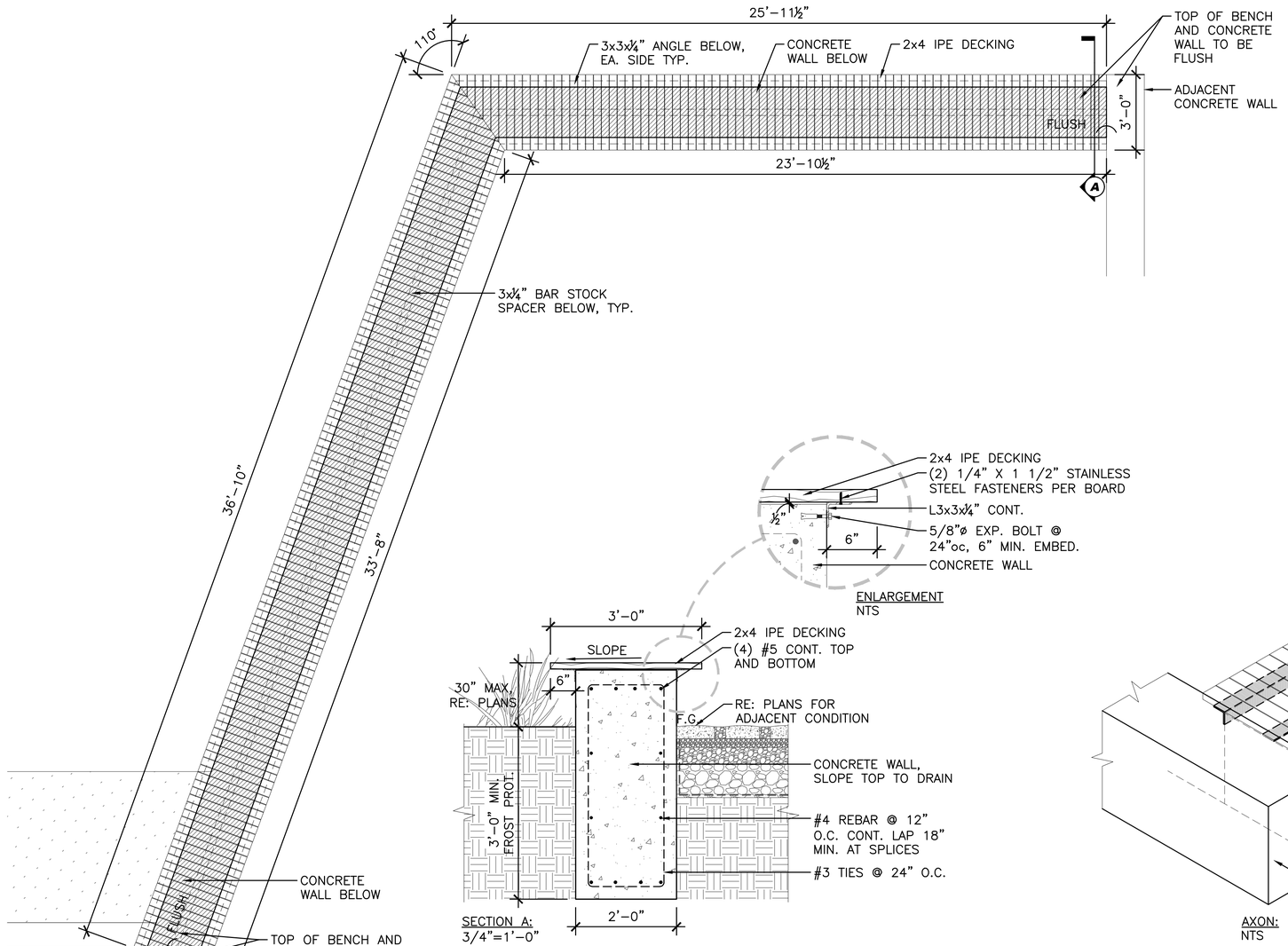

PLAN:
⅜"=1'–0"

ENLARGEMENT
NTS

SECTION A:
3/4"=1'–0"

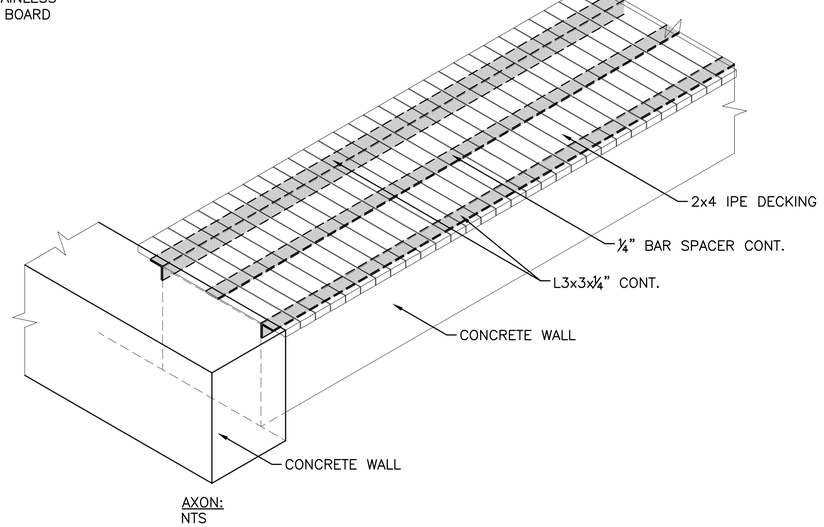

AXON:
NTS

NOTES:
1. REFERENCE GRADING PLAN FOR TOP OF WALL ELEVATIONS. CONTRACTOR SHALL VERIFY WALL ELEVATIONS WITH OWNER'S REPRESENTATIVE PRIOR TO CONSTRUCTION.
2. FOOTER MINIMUM DEPTH TO EXTEND TO FROST DEPTH.
4. TOP OF WALLS AND VERTICAL FACES TO RECEIVE SMOOTH RUB CONCRETE FINISH.
5. TOP OF WALL TO REMAIN LEVEL
6. SAW CUT CONTROL JOINTS TO BE 1/8" WIDTH W/ 3/8" CUT DEPTH 5' O.C.
7. ALL VERTICAL AND HORIZONTAL EDGES OF CONCRETE TO INCLUDE ¾" CHAMFER.
8. ALL EXPOSED CONCRETE FACES SMOOTH RUB FINISH.
9. TOP OF CONCRETE WALL SHALL MAINTAIN POSITIVE SLOPE.
10. PLAN AND DRAWINGS REFLECT DESIGN INTENT, SHOP DRAWINGS TO BE PROVIDED BY CONTRACTOR FOR APPROVAL BY OWNER'S REPRESENTATIVE PRIOR TO CONSTRUCTION.
11. CONTRACTOR IS RESPONSIBLE FOR STRUCTURAL INTEGRITY OF SEATING BENCH COMPONENTS (INCLUDING BUT NOT LIMITED TO) WALLS, RAILS, DECKING, FASTENERS, HARDWARE, AND FOOTINGS.
12. ALL DECKING IS TO BE IPE WOOD. IPE MUST BE FSC CERTIFIED.
13. PROVIDE IPE SEALER AND CONDITIONER FOR ALL EXPOSED WOOD FOR BENCH TOP. PRIOR TO CONSTRUCTION CONTRACTOR TO SUBMIT SEALER/CONDITIONER OPTIONS TO OWNER'S REPRESENTATIVE FOR APPROVAL.

□□ □EN□H TOP□E□K □ □RI□□E □AN□IN□
AS SHOWN

wenk
ASSOCIATES
PLANNERS & LANDSCAPE ARCHITECTS
303.628.0003

DENVER
THE MILE HIGH CITY

RIVER NORTH PARK
DENVER, COLORADO

NICOLE K. HORST
626
10/07/2008
Original Date of Licensure
STATE OF COLORADO
LICENSED LANDSCAPE ARCHITECT
FOR AND ON BEHALF OF WENK ASSOCIATES
NOT VALID WITHOUT ORIGINAL SIGNATURE

KEY PLAN:

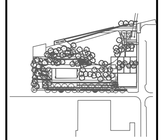

REVISIONS:
NAME DATE

DRAWN BY:
BP/TS

REVIEWED BY:
NH

PROJECT NUMBER:
15014

DATE:
OCTOBER 2018

ISSUE:
BID SET

SHEET TITLE:
LANDSCAPE DETAILS

SHEET NUMBER:
L4.11

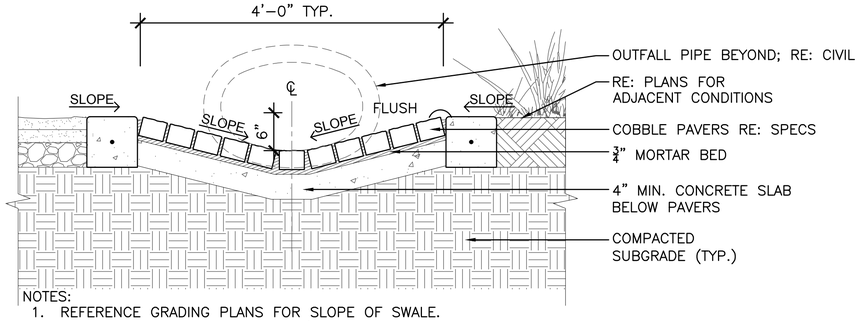

NOTES:
1. REFERENCE GRADING PLANS FOR SLOPE OF SWALE.
2. CONTRACTOR TO CONTACT OWNER'S REPRESENTATIVE TO STAKE THE LAYOUT OF THE COBBLE SWALE PRIOR TO CONSTRUCTION.

ROUTE OVERLAY
1"=1'-0"

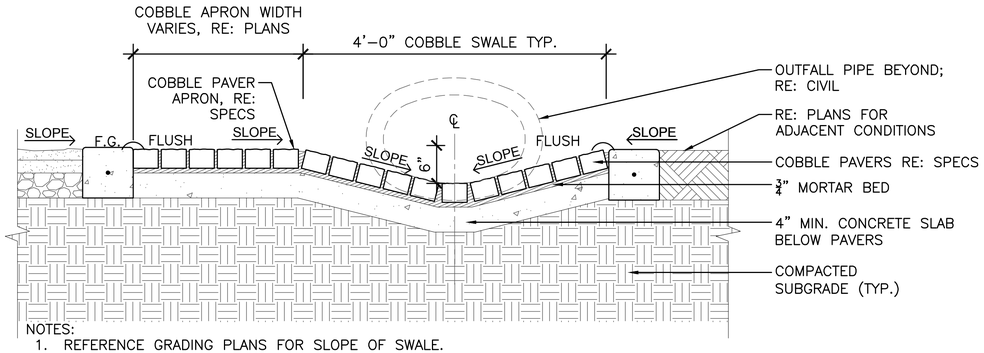

NOTES:
1. REFERENCE GRADING PLANS FOR SLOPE OF SWALE.
2. WIDTH OF COBBLE APRON SHALL VARY BASED PLANS. CONTRACTOR TO CONTACT OWNER'S REPRESENTATIVE TO STAKE THE LAYOUT OF THE COBBLE SWALE PRIOR TO CONSTRUCTION.

ROUTE OVERLAY APRON
1"=1'-0"

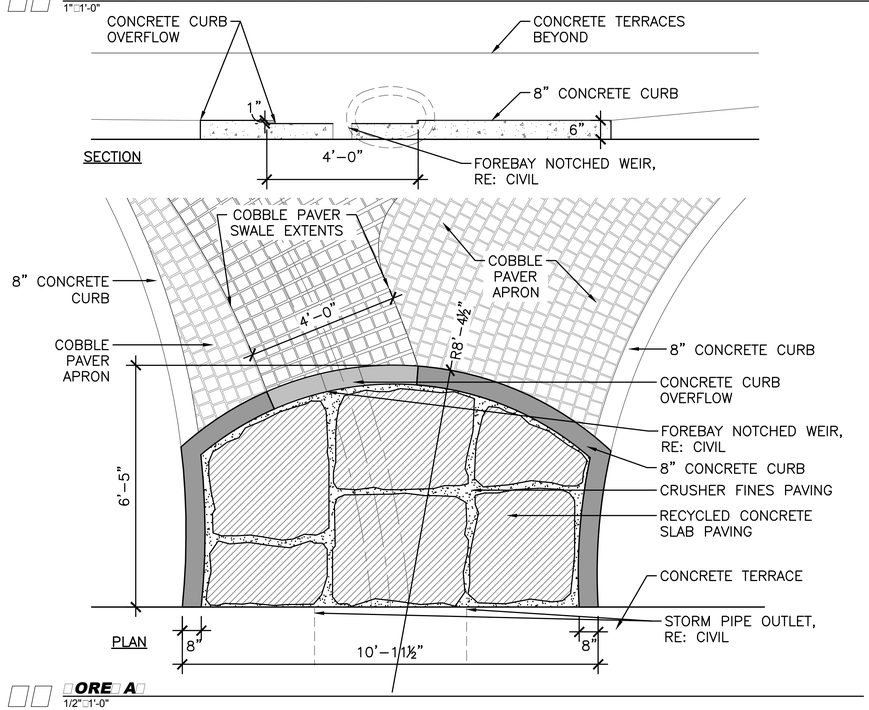

CORE A
1/2"=1'-0"

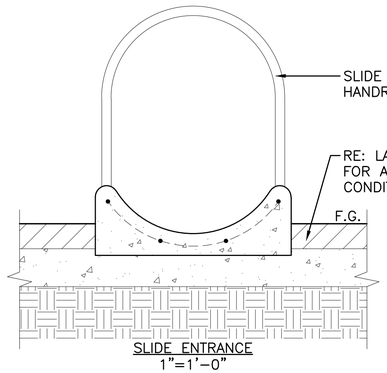

SLIDE ENTRANCE
1"=1'–0"

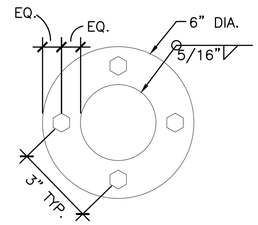

ENLARGEMENT: PLAN
N.T.S.

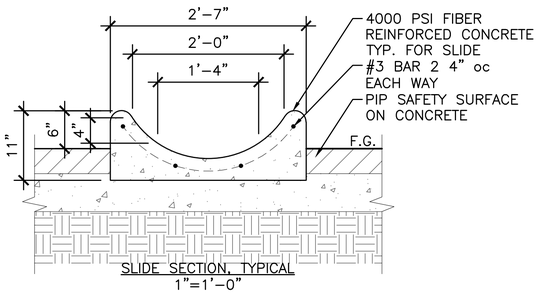

SLIDE SECTION, TYPICAL
1"=1'–0"

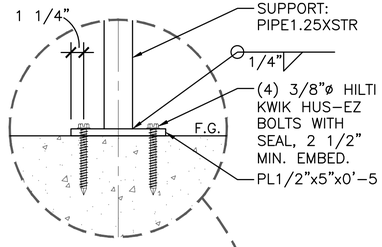

BASE PLATE ENLARGEMENT
N.T.S.

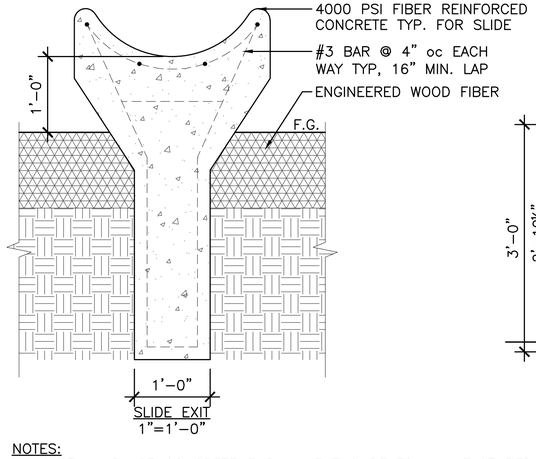

SLIDE EXIT
1"=1'–0"

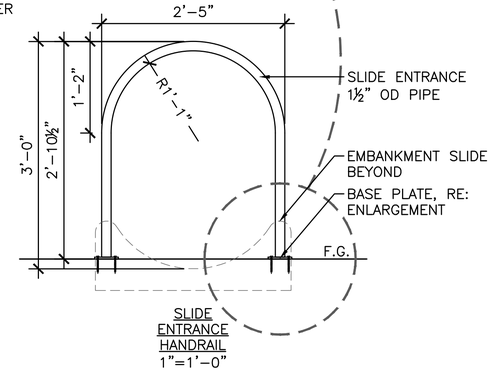

SLIDE ENTRANCE HANDRAIL
1"=1'–0"

NOTES:
1. CAST–IN–PLACE CONCRETE EMBANKMENT SLIDE TO MANUFACTURED BY ID SCULPTURES, SUPPLIED BY RECREATION PLUS, LTD. (CONTACT: CATHY WEISSBERG, 303.278.1455) OR APPROVED EQUAL.
2. SEE GRADING PLANS AND SECTIONS FOR MORE INFORMATION.
3. CONTRACTOR SHALL PROVIDE SHOP DRAWINGS OF EMBANKMENT SLIDE, REBAR, RAIL AND CONNECTIONS FOR APPROVAL BY OWNER'S REPRESENTATIVE PRIOR TO CONSTRUCTION.
4. CONTRACTOR SHALL PROVIDE A MIN. 3'X3' MOCKUP TO OWNER'S REPRESENTATIVE FOR APPROVAL OF SLIDE FINISH.
5. EMBANKMENT SLIDE CONSTRUCTION AND DIMENSIONING SHALL MEET ALL CURRENT APPLICABLE ADA, ASTM CODES, AND DENVER PARKS STANDARDS.
6. SLIDE ENTRY RAIL SHALL BE CONSTRUCTED IN ACCORDANCE WITH ALL APPLICABLE CODES AND STANDARDS.
7. SLIDE ENTRY RAILING SHALL MATCH STAIR AND RAMP HANDRAILS, SEE SPECIFICATIONS

CONCRETE EMBANKMENT SLIDE
AS SHOWN

wenk
ASSOCIATES
PLANNERS & LANDSCAPE ARCHITECTS
303.628.0003

DENVER
THE MILE HIGH CITY

RIVER NORTH PARK
DENVER, COLORADO

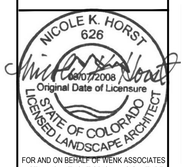

FOR AND ON BEHALF OF WENK ASSOCIATES
NOT VALID WITHOUT ORIGINAL SIGNATURE

KEY PLAN:

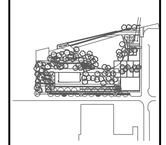

REVISIONS:
NAME DATE

DRAWN BY:
BP/TS

REVIEWED BY:
NH

PROJECT NUMBER:
15014

DATE:
OCTOBER 2018

ISSUE:
BID SET

SHEET TITLE:
LANDSCAPE DETAILS

SHEET NUMBER:
L4.12

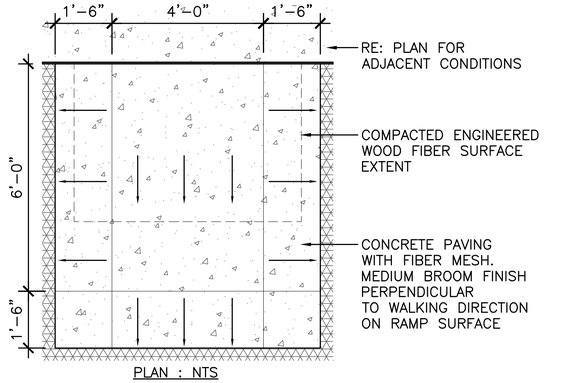

PLAN : NTS

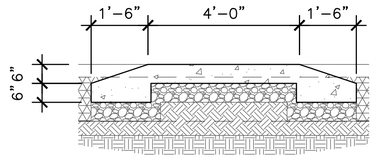

SECTION/ELEVATION

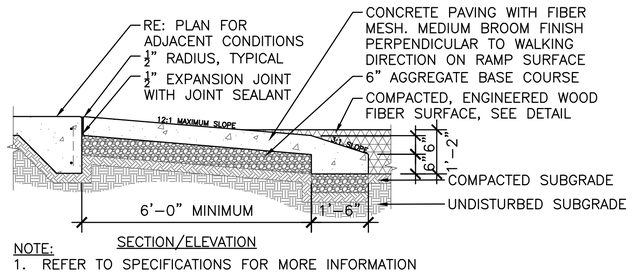

SECTION/ELEVATION

NOTE:
1. REFER TO SPECIFICATIONS FOR MORE INFORMATION

PLAY AREA RAMP
1" = 1'-0"

BASEMAT THICKNESS	
FALL HIGHT	THICKNESS
4'-0"	1.75"
5'-0"	2"
6'-0"	2.5"
7'-0"	3"
8'-0"	3.5"
10'-0"	4.25"
12'-0"	5"

TABLE

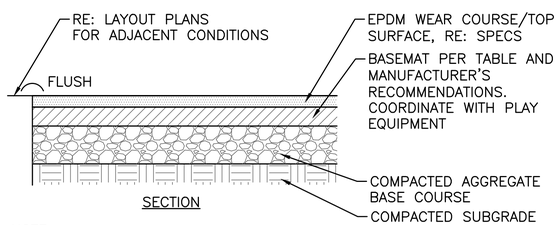

SECTION

NOTE:
1. THICKNESS OF SURFACING SHALL BE DETERMINED BY PLAY EQUIPMENT FALL HEIGHTS. CONTRACTOR IS RESPONSIBLE FOR COORDINATING WITH PLAYGROUND MANUFACTURER.
2. FINAL THICKNESS PLAN SHALL BE SUBMITTED TO THE OWNER'S REPRESENTATIVE FOR APPROVAL PRIOR TO INSTALLATION.
3. AN ALIPHATIC BINDER SHALL BE USED.

POURED IN PLACE RUBBER
1" = 1'-0"

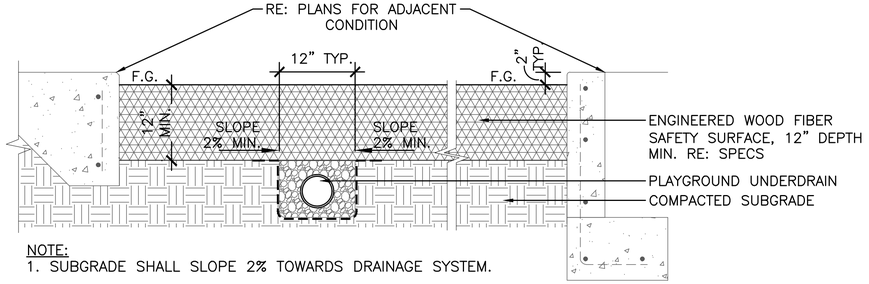

NOTE:
1. SUBGRADE SHALL SLOPE 2% TOWARDS DRAINAGE SYSTEM.

ENGINEERED WOOD FIBER
1" = 1'-0"

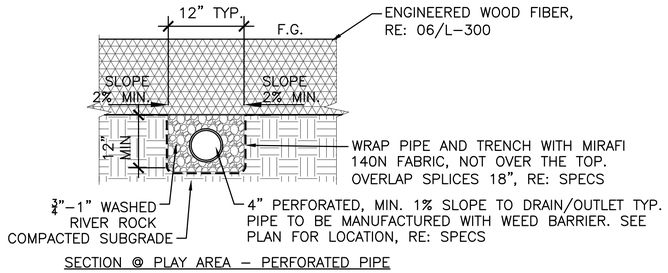

SECTION @ PLAY AREA – PERFORATED PIPE

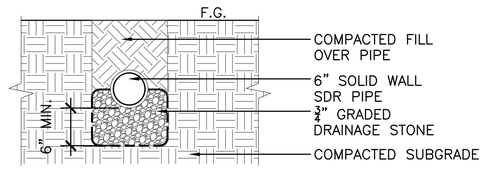

SECTION @ LANDSCAPE – SOLID PIPE

NOTES:
1. CONTRACTOR SHALL SLOPE PIPE TO DRAIN AT 1% MIN SLOPE TO DRAIN/OUTLET.
2. INSTALL PER MANUFACTURER'S RECOMMENDATIONS.

PLAY AREA INTERRAIN
1" = 1'-0"

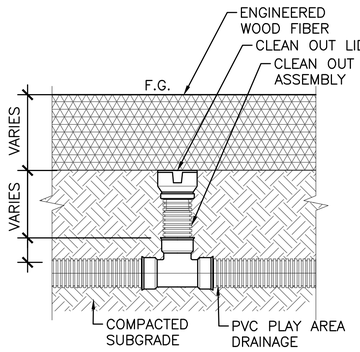

CLEAN OUT SECTION

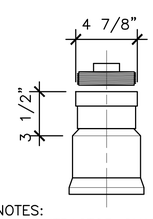

SECTION
1/2"=1'-0"

CLEANOUT ASSEMBLY: NYLOPLAST STANDARD

NOTES:
1. CONTRACTOR SHALL INSTALL LANDSCAPE DRAIN IN ACCORDANCE WITH MANUFACTURER'S INSTRUCTIONS AND RECOMMENDATIONS.
2. CONTRACTOR SHALL FIELD VERIFY LOCATIONS OF CLEANOUTS WITH OWNER'S REPRESENTATIVE PRIOR TO INSTALLATION.
3. REFER TO PLANS FOR SIZES OF PIPE.

INTERRAIN CLEANOUT
1" = 1'-0"

wenk
ASSOCIATES
PLANNERS & LANDSCAPE ARCHITECTS
303.628.0003

DENVER
THE MILE HIGH CITY

RIVER NORTH PARK
DENVER, COLORADO

NICOLE K. HORST
626
Original Date of Licensure
STATE OF COLORADO
LICENSED LANDSCAPE ARCHITECT
FOR AND ON BEHALF OF WENK ASSOCIATES
NOT VALID WITHOUT ORIGINAL SIGNATURE

KEY PLAN:

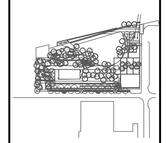

REVISIONS:
NAME DATE

DRAWN BY:
BP/TS

REVIEWED BY:
NH

PROJECT NUMBER:
15014

DATE:
OCTOBER 2018

ISSUE:
BID SET

SHEET TITLE:
LANDSCAPE DETAILS

SHEET NUMBER:
L4.13



EXISTING PHOTO

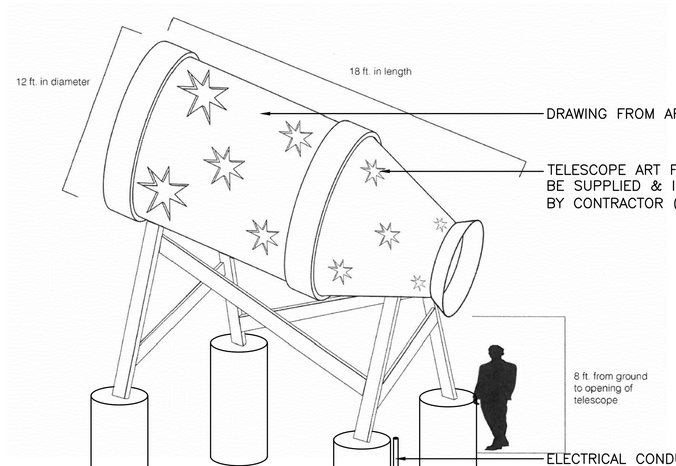

TELESCOPE AXON
NTS

NOTES:
1. CONTRACTOR IS RESPONSIBLE FOR COORDINATING SITE ACCESS AND SCHEDULING DELIVER/INSTALLATION OF ART FEATURES WITH THE ARTISTS AND THEIR SUB CONSULTANTS.
2. ARTISTS TO SUPPLY ALL MATERIALS & LABOR FOR INSTALLING ART PIECES ON FOUNDATIONS (N.I.C.)

ART □TE□E□□OPE
NOT TO SCALE



EXISTING PHOTO

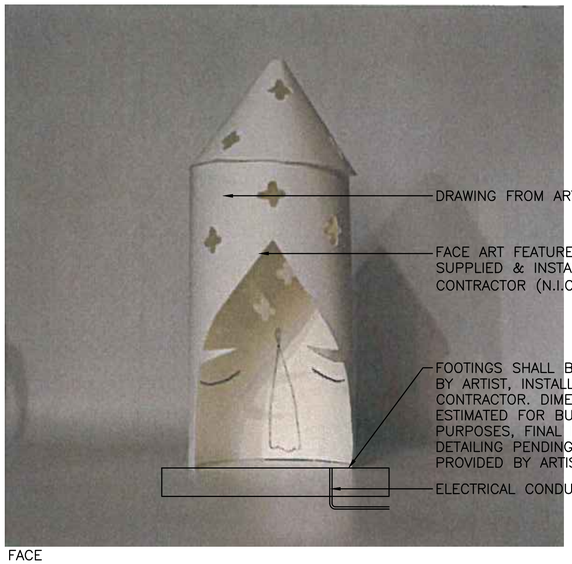

FACE

NOTES:
1. CONTRACTOR IS RESPONSIBLE FOR COORDINATING SITE ACCESS AND SCHEDULING DELIVER/INSTALLATION OF ART FEATURES WITH THE ARTISTS AND THEIR SUB CONSULTANTS.
2. ARTISTS TO SUPPLY ALL MATERIALS & LABOR FOR INSTALLING ART PIECES ON FOUNDATIONS (N.I.C.)

ART □□A□E
NOT TO SCALE

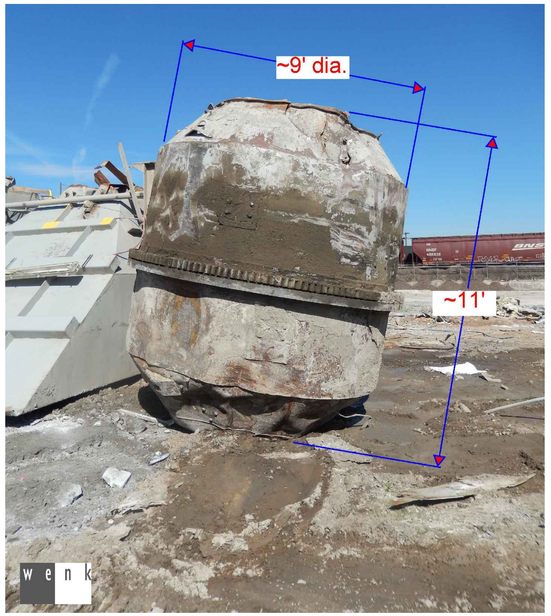

EXISTING PHOTO

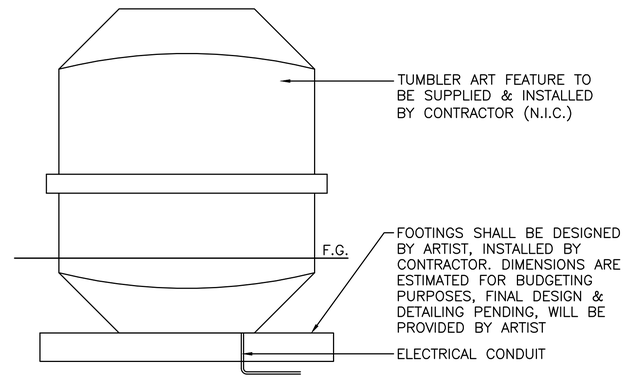

TUMBLER

NOTES:
1. CONTRACTOR IS RESPONSIBLE FOR COORDINATING SITE ACCESS AND SCHEDULING DELIVER/INSTALLATION OF ART FEATURES WITH THE ARTISTS AND THEIR SUB CONSULTANTS.
2. ARTISTS TO SUPPLY ALL MATERIALS & LABOR FOR INSTALLING ART PIECES ON FOUNDATIONS (N.I.C.)

ART □T□M□□ER
NOT TO SCALE

□OR IN□ORMATION ON□□

wenk
ASSOCIATES
PLANNERS & LANDSCAPE ARCHITECTS
303.628.0003

DENVER
THE MILE HIGH CITY

RIVER NORTH PARK
DENVER, COLORADO

NICOLE K. HORST
626
10/07/2008
Original Date of Licensure
STATE OF COLORADO
LICENSED LANDSCAPE ARCHITECT
FOR AND ON BEHALF OF WENK ASSOCIATES
NOT VALID WITHOUT ORIGINAL SIGNATURE

KEY PLAN:

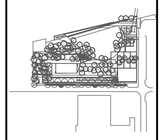

REVISIONS:
NAME DATE

DRAWN BY:
BP/TS

REVIEWED BY:
NH

PROJECT NUMBER:
15014

DATE:
OCTOBER 2018

ISSUE:
BID SET

SHEET TITLE:
LANDSCAPE DETAILS

SHEET NUMBER:
L4.14

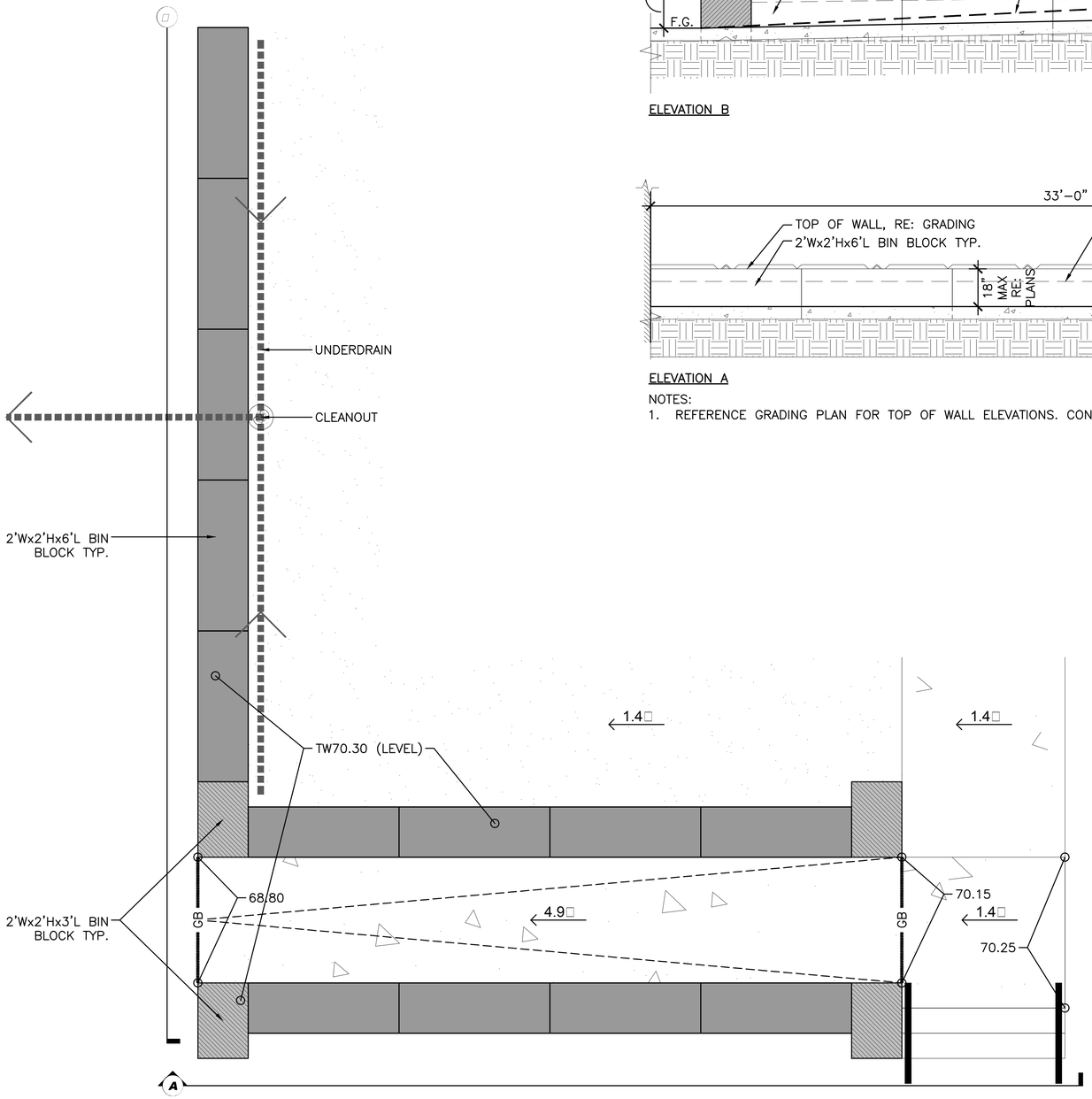

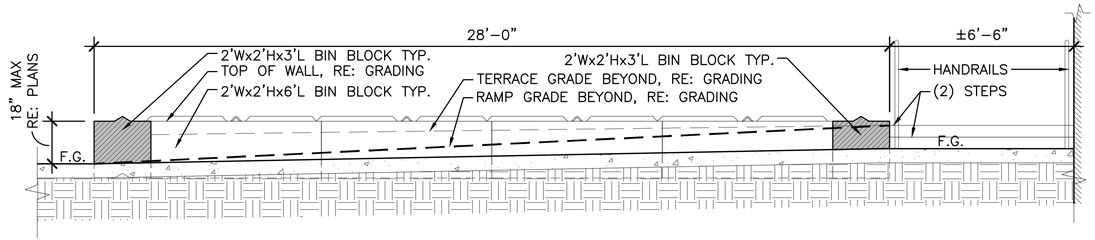

ELEVATION B

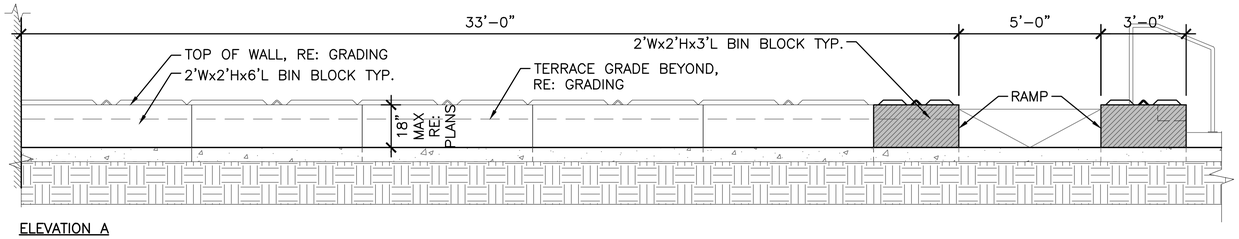

ELEVATION A

NOTES:
1. REFERENCE GRADING PLAN FOR TOP OF WALL ELEVATIONS. CONTRACTOR SHALL VERIFY WALL ELEVATIONS WITH OWNER'S REPRESENTATIVE PRIOR TO CONSTRUCTION.

A E TERRACE A
1/2" = 1'-0"

wenk
ASSOCIATES
PLANNERS & LANDSCAPE ARCHITECTS
303.628.0003

DENVER
THE MILE HIGH CITY

RIVER NORTH PARK
DENVER, COLORADO

NICOLE K. HORST
626
10/07/2008
Original Date of Licensure
STATE OF COLORADO
LICENSED LANDSCAPE ARCHITECT
FOR AND ON BEHALF OF WENK ASSOCIATES
NOT VALID WITHOUT ORIGINAL SIGNATURE

KEY PLAN:

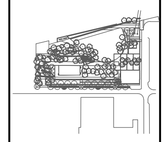

REVISIONS:
NAME DATE

DRAWN BY:
BP/TS

REVIEWED BY:
NH

PROJECT NUMBER:
15014

DATE:
OCTOBER 2018

ISSUE:
BID SET

SHEET TITLE:
LANDSCAPE DETAILS

SHEET NUMBER:
L4.15

PLANTING NOTES

1. THE CONTRACTOR SHALL SUPPLY ALL PLANTS IN QUANTITIES SUFFICIENT TO COMPLETE THE WORK SHOWN ON THE PLAN. SHOULD ANY DISCREPANCIES EXIST BETWEEN QUANTITIES SHOWN IN THE PLANT LIST AND THOSE SHOWN IN THE DRAWINGS, THE DRAWINGS SHALL TAKE PRECEDENCE.
2. ALL PLANT MATERIAL SHALL BE REVIEWED BY THE OWNER'S REPRESENTATIVE PRIOR TO INSTALLATION. CONTRACTOR SHALL INSURE PLANT MATERIAL MEET THE SPECIFICATIONS OF THE AMERICAN STANDARDS FOR NURSERY STOCK (LATEST EDITION) AS SET FORTH BY THE AMERICAN ASSOCIATION OF NURSERYMEN.
3. CONTRACTOR SHALL FURNISH PLANT MATERIALS FREE OF PESTS OR PLANT DISEASES. PRE-SELECTED OR "TAGGED" MATERIAL MUST BE INSPECTED BY THE CONTRACTOR AND CERTIFIED PEST AND DISEASE FREE. IT IS THE CONTRACTOR'S OBLIGATION TO WARRANTY ALL PLANT MATERIALS PER THE SPECIFICATIONS.
4. CONTRACTOR SHALL REVIEW TREE LAYOUT WITH OWNER'S REP. TO DETERMINE CONFLICTS OR INTERFERENCE PRIOR TO STAKING. CONTRACTOR SHALL STAKE PLANT LOCATIONS FOR THE REVIEW BY THE OWNER'S REPRESENTATIVE, PRIOR TO DIGGING PLANTING PITS. THE CONTRACTOR SHALL RELOCATE ANY PLANT AS DIRECTED BY THE OWNER'S REPRESENTATIVE PRIOR TO PLANTING AT NO ADDITIONAL COST TO THE OWNER.
5. ALL LANDSCAPE AREAS SHALL BE COVERED WITH A MINIMUM OF 4 INCH DEPTH MULCH, UNLESS EROSION CONTROL FABRIC IS INSTALLED. SUBMIT MULCH SAMPLE TO LANDSCAPE ARCHITECT PRIOR TO INSTALLATION.
6. ANY LANDSCAPE AREAS BEYOND DISTURBED BY CONSTRUCTION OPERATIONS, NOT DIRECTED BY OWNER'S REPRESENTATIVE, SHALL BE REPAIRED OR REPLACED AT THE CONTRACTOR'S EXPENSE.
7. CONTAMINATION OF PLANTING MIX/TOPSOIL TO REMAIN DURING CONSTRUCTION WILL REQUIRE COMPLETE REPLACEMENT AT CONTRACTOR'S EXPENSE.
8. PLANTING PERMIT IS REQUIRED FROM CITY FORESTER PRIOR TO INSTALLATION OF ANY TREES WITHIN THIS PROJECT. (EMAIL FORESTRY DENVERGOV.ORG TO SUBMIT REQUEST FOR PROJECT PERMIT.)

NOTES:

1. NO FILL OR STRUCTURES ARE ALLOWED IN FLOODWAY.
2. FLOOD HAZARD INFORMATION FROM FEMA FIRM, MAP NUMBER 0800460088H, MAP REVISED NOVEMBER 20, 2013
3. BOLLARD SYMBOLS ARE REPRESENTATIONAL AND DO NOT REFLECT ACTUAL SIZE

PLANTING LEGEND

- BLUEGRASS SOD LAWN
- RIPARIAN SEED MIX
- SHRUBS/PERRENIALS
- CONCRETE PAVING - RECYCLED SLAB
- CONCRETE UNIT PAVERS - PERMEABLE
- CRUSHER FINES PAVING

PLANT SCHEDULE

TREES	QTY	BOTANICAL NAME / COMMON NAME	CONT	CAL	REMARKS
AB	3	ACER NEGUNDO 'SENSATION'/ SENSATION BOX ELDER MAPLE	B & B	2.5"CAL	
AM	11	AMELANCHIER CANADENSIS / SHADBLOW SERVICEBERRY MULTITRUNK	B & B	6.0	MULTISTEM
AG	5	AMELANCHIER X GRANDIFLORA 'AUTUMN BRILLIANCE'/ 'AUTUMN BRILLIANCE'SERVICEBERRY	B & B	10.0	MULTISTEM
CO	6	CELTIS OCCIDENTALIS / COMMON HACKBERRY	B & B	2.5"CAL	
CC	7	CERCIS CANADENSIS / EASTERN REDBUD	B & B	2"CAL	
CV	2	CRATAEGUS VIRIDIS 'WINTER KING'/ 'WINTER KING'HAWTHORN	B & B	2"CAL	
GS	12	GLEDITSIA TRIACANTHOS INERMIS 'SHADEMASTER'TM / SHADEMASTER LOCUST	B & B	2.5"CAL	
GD	9	GYMNOCLADUS DIOICA 'ESPRESSO'/ KENTUCKY COFFEETREE	B & B	2.5"CAL	
LT	9	LIRIODENDRON TULIPIFERA / TULIP TREE	B & B	2.5"CAL	
PD	24	POPULUS DELTOIDES MONILIFERA / PLAINS COTTONWOOD	B & B	2.5"CAL	
QA	2	QUERCUS ALBA / WHITE OAK	B & B	2.5"CAL	
QB	2	QUERCUS BICOLOR / SWAMP WHITE OAK	B & B	2.5"CAL	
QH	3	QUERCUS HERITAGE / HERITAGE OAK	B & B	2.5"CAL	
QM	2	QUERCUS MACROCARPA / BURR OAK	B & B	2.5"CAL	
QM2	7	QUERCUS MUEHLENBERGII / CHINKAPIN OAK	B & B	2.5"CAL	
QR2	3	QUERCUS RUBRA / RED OAK	B & B	2.5"CAL	
QS	4	QUERCUS SHUMARDII / SHUMARD OAK	B & B	2.5"CAL	

SHRUBS	QTY	BOTANICAL NAME / COMMON NAME	SIZE	PLANT TYPE	REMARKS
CK	57	CORNUS SERICEA 'KELSEYI'/ KELSEYI DOGWOOD	5 GAL	SHRUB	AS SHOWN
MR2	126	MAHONIA REPENS / CREEPING MAHONIA	5 GAL	SHRUB	AS SHOWN
PM	16	PHYSOCARPUS MONOGYNUS / MOUNTAIN NINEBARK	5 GAL	SHRUB	AS SHOWN
PB	84	PRUNUS BESSEYI 'PAWNEE BUTTES'/ CREEPING WESTERN SAND CHERRY	5 GAL	SHRUB	AS SHOWN
RG2	69	RHUS AROMATICA 'GRO-LOW'/ GRO-LOW FRAGRANT SUMAC	5 GAL	SHRUB	AS SHOWN

ANNUALS/PERENNIALS	QTY	BOTANICAL NAME / COMMON NAME	SIZE	PLANT TYPE	REMARKS
AS	132	AGASTACHE RUPESTRIS 'SUNSET'/ SUNSET HYSSOP	1 GAL	PERENNIAL	AS SHOWN
LM	105	LAVANDULA ANGUSTIFOLIA 'MUNSTEAD'/ MUNSTEAD ENGLISH LAVENDER	1 GAL	PERENNIAL	AS SHOWN

GRASSES	QTY	BOTANICAL NAME / COMMON NAME	SIZE	PLANT TYPE	REMARKS
FB	72	FESTUCA GLAUCA 'BOULDER BLUE'/ BOULDER BLUE FESCUE	1 GAL	ORNAMENTAL GRASS	AS SHOWN
HS	226	HELICTOTRICHON SEMPERVIRENS 'SAPPHIRE'/ BLUE OAT GRASS	1 GAL	ORNAMENTAL GRASS	AS SHOWN
MU	227	MUHLENBERGIA REVERCHONI 'UNDAUNTED'/ UNDAUNTED MUHLY	1 GAL	ORNAMENTAL GRASS	AS SHOWN
PV	95	PANICUM VIRGATUM / SWITCH GRASS	5 GAL	ORNAMENTAL GRASS	AS SHOWN
PP	96	PANICUM VIRGATUM 'PRAIRIE SKY'/ PRAIRIE SKY SWITCH GRASS	5 GAL	ORNAMENTAL GRASS	AS SHOWN
PS	50	PANICUM VIRGATUM 'SHENANDOAH'/ SHENANDOAH RED SWITCH GRASS	5 GAL	ORNAMENTAL GRASS	AS SHOWN
SL	303	SCHIZACHYRIUM SCOPARIUM / LITTLE BLUESTEM GRASS	1 GAL	ORNAMENTAL GRASS	AS SHOWN

OVERALL PLANTING PLAN

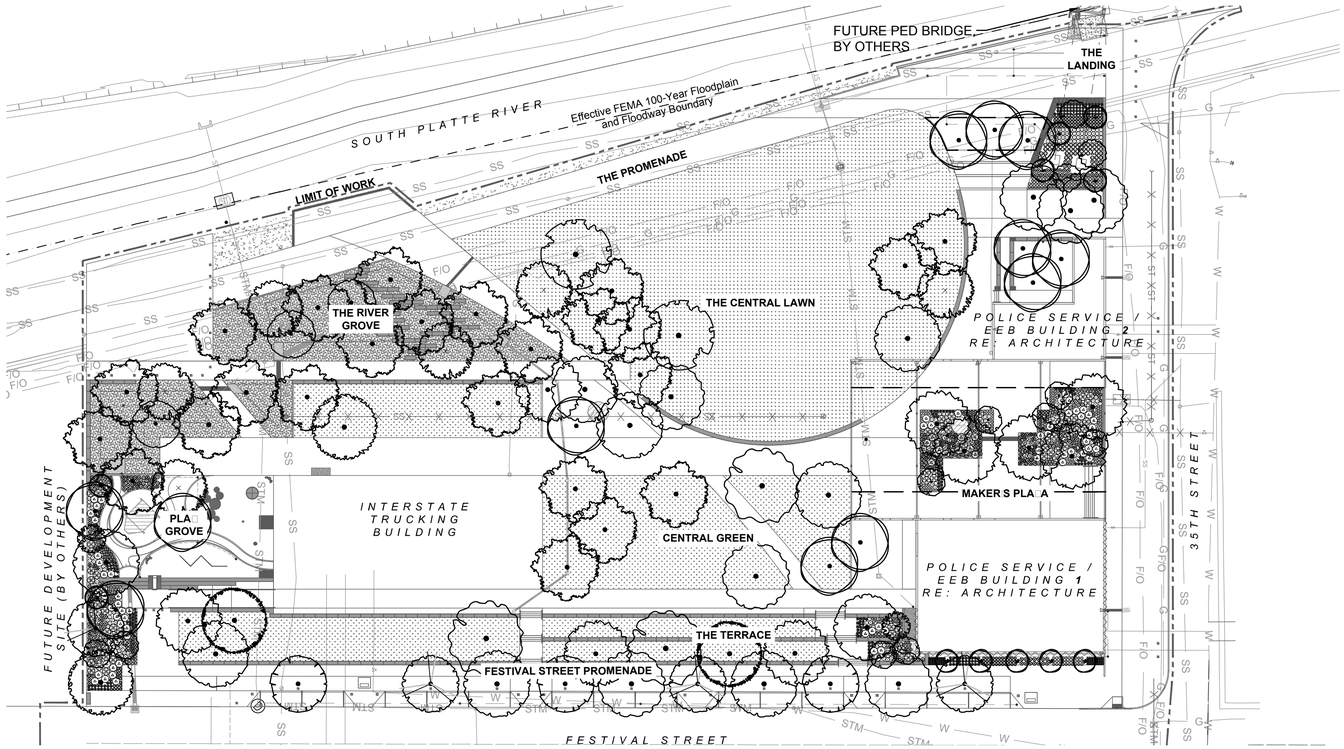

wenk ASSOCIATES
PLANNERS & LANDSCAPE ARCHITECTS
303.628.0003

DENVER
THE MILE HIGH CITY

RIVER NORTH PARK

DENVER, COLORADO

NICOLE K. HORST 626 — 08/07/2008 Original Date of Licensure — STATE OF COLORADO — LICENSED LANDSCAPE ARCHITECT

FOR AND ON BEHALF OF: WENK ASSOCIATES
NOT VALID WITHOUT ORIGINAL SIGNATURE

KEY PLAN:

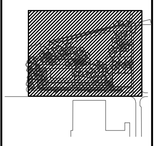

REVISIONS:

NAME	DATE

DRAWN BY: BP/TS

REVIEWED BY: NH

PROJECT NUMBER: 15014

DATE: **OCTOBER 2018**

ISSUE: BID SET

SHEET TITLE: PLANTING NOTES & SCHEDULE

SHEET NUMBER: PL1.0

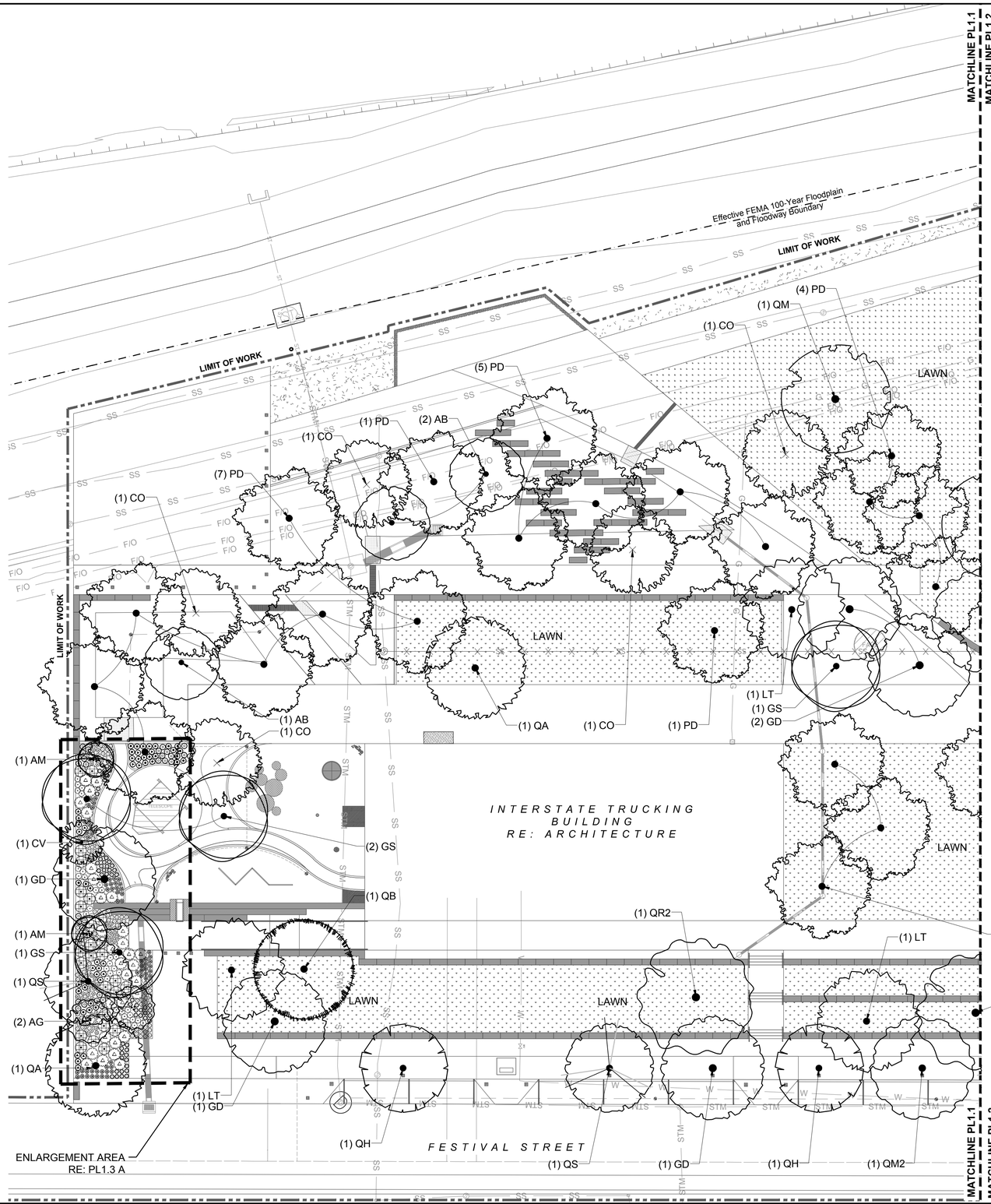

PLANTING LEGEND

- BLUEGRASS SOD LAWN
- RIPARIAN SEED MIX
- SHRUBS/PERRENIALS
- CONCRETE PAVING - RECYCLED SLAB
- CONCRETE UNIT PAVERS - PERMEABLE
- CRUSHER FINES PAVING

PLANT SCHEDULE

TREES	QTY	BOTANICAL NAME / COMMON NAME	CONT	CAL	REMARKS
AB	3	ACER NEGUNDO 'SENSATION'/ SENSATION BOX ELDER MAPLE	B & B	2.5"CAL	
AM	11	AMELANCHIER CANADENSIS / SHADBLOW SERVICEBERRY MULTITRUNK	B & B	6.0	MULTISTEM
AG	5	AMELANCHIER X GRANDIFLORA 'AUTUMN BRILLIANCE'/ 'AUTUMN BRILLIANCE' SERVICEBERRY	B & B	10.0	MULTISTEM
CO	6	CELTIS OCCIDENTALIS / COMMON HACKBERRY	B & B	2.5"CAL	
CC	7	CERCIS CANADENSIS / EASTERN REDBUD	B & B	2"CAL	
CV	2	CRATAEGUS VIRIDIS 'WINTER KING'/ 'WINTER KING' HAWTHORN	B & B	2"CAL	
GS	12	GLEDITSIA TRIACANTHOS INERMIS 'SHADEMASTER' TM / SHADEMASTER LOCUST	B & B	2.5"CAL	
GD	9	GYMNOCLADUS DIOICA 'ESPRESSO'/ KENTUCKY COFFEETREE	B & B	2.5"CAL	
LT	9	LIRIODENDRON TULIPIFERA / TULIP TREE	B & B	2.5"CAL	
PD	24	POPULUS DELTOIDES MONILIFERA / PLAINS COTTONWOOD	B & B	2.5"CAL	
QA	2	QUERCUS ALBA / WHITE OAK	B & B	2.5"CAL	
QB	2	QUERCUS BICOLOR / SWAMP WHITE OAK	B & B	2.5"CAL	
QH	3	QUERCUS HERITAGE / HERITAGE OAK	B & B	2.5"CAL	
QM	2	QUERCUS MACROCARPA / BURR OAK	B & B	2.5"CAL	
QM2	7	QUERCUS MUEHLENBERGII / CHINKAPIN OAK	B & B	2.5"CAL	
QR2	3	QUERCUS RUBRA / RED OAK	B & B	2.5"CAL	
QS	4	QUERCUS SHUMARDII / SHUMARD OAK	B & B	2.5"CAL	

SHRUBS	QTY	BOTANICAL NAME / COMMON NAME	SIZE	PLANT TYPE	REMARKS
CK	57	CORNUS SERICEA 'KELSEYI'/ KELSEYI DOGWOOD	5 GAL	SHRUB	AS SHOWN
MR2	126	MAHONIA REPENS / CREEPING MAHONIA	5 GAL	SHRUB	AS SHOWN
PM	16	PHYSOCARPUS MONOGYNUS / MOUNTAIN NINEBARK	5 GAL	SHRUB	AS SHOWN
PB	84	PRUNUS BESSEYI 'PAWNEE BUTTES'/ CREEPING WESTERN SAND CHERRY	5 GAL	SHRUB	AS SHOWN
RG2	69	RHUS AROMATICA 'GRO-LOW'/ GRO-LOW FRAGRANT SUMAC	5 GAL	SHRUB	AS SHOWN

ANNUALS/PERENNIALS	QTY	BOTANICAL NAME / COMMON NAME	SIZE	PLANT TYPE	REMARKS
AS	132	AGASTACHE RUPESTRIS 'SUNSET'/ SUNSET HYSSOP	1 GAL	PERENNIAL	AS SHOWN
LM	105	LAVANDULA ANGUSTIFOLIA 'MUNSTEAD'/ MUNSTEAD ENGLISH LAVENDER	1 GAL	PERENNIAL	AS SHOWN

GRASSES	QTY	BOTANICAL NAME / COMMON NAME	SIZE	PLANT TYPE	REMARKS
FB	72	FESTUCA GLAUCA 'BOULDER BLUE'/ BOULDER BLUE FESCUE	1 GAL	ORNAMENTAL GRASS	AS SHOWN
HS	226	HELICTOTRICHON SEMPERVIRENS 'SAPPHIRE'/ BLUE OAT GRASS	1 GAL	ORNAMENTAL GRASS	AS SHOWN
MU	227	MUHLENBERGIA REVERCHONI 'UNDAUNTED'/ UNDAUNTED MUHLY	1 GAL	ORNAMENTAL GRASS	AS SHOWN
PV	95	PANICUM VIRGATUM / SWITCH GRASS	5 GAL	ORNAMENTAL GRASS	AS SHOWN
PP	96	PANICUM VIRGATUM 'PRAIRIE SKY'/ PRAIRIE SKY SWITCH GRASS	5 GAL	ORNAMENTAL GRASS	AS SHOWN
PS	50	PANICUM VIRGATUM 'SHENANDOAH'/ SHENANDOAH RED SWITCH GRASS	5 GAL	ORNAMENTAL GRASS	AS SHOWN
SL	303	SCHIZACHYRIUM SCOPARIUM / LITTLE BLUESTEM GRASS	1 GAL	ORNAMENTAL GRASS	AS SHOWN

wenk
ASSOCIATES
PLANNERS & LANDSCAPE ARCHITECTS
303.628.0003

DENVER
THE MILE HIGH CITY

RIVER NORTH PARK

DENVER, COLORADO

NICOLE K. HORST
626
08/07/2008
Original Date of Licensure
STATE OF COLORADO
LICENSED LANDSCAPE ARCHITECT
FOR AND ON BEHALF OF WENK ASSOCIATES
NOT VALID WITHOUT ORIGINAL SIGNATURE

KEY PLAN:

REVISIONS:

NAME	DATE

DRAWN BY: BP/TS

REVIEWED BY: NH

PROJECT NUMBER: 15014

DATE: **OCTOBER 2018**

ISSUE: BID SET

SHEET TITLE: PLANTING PLAN

SHEET NUMBER: PL1.1

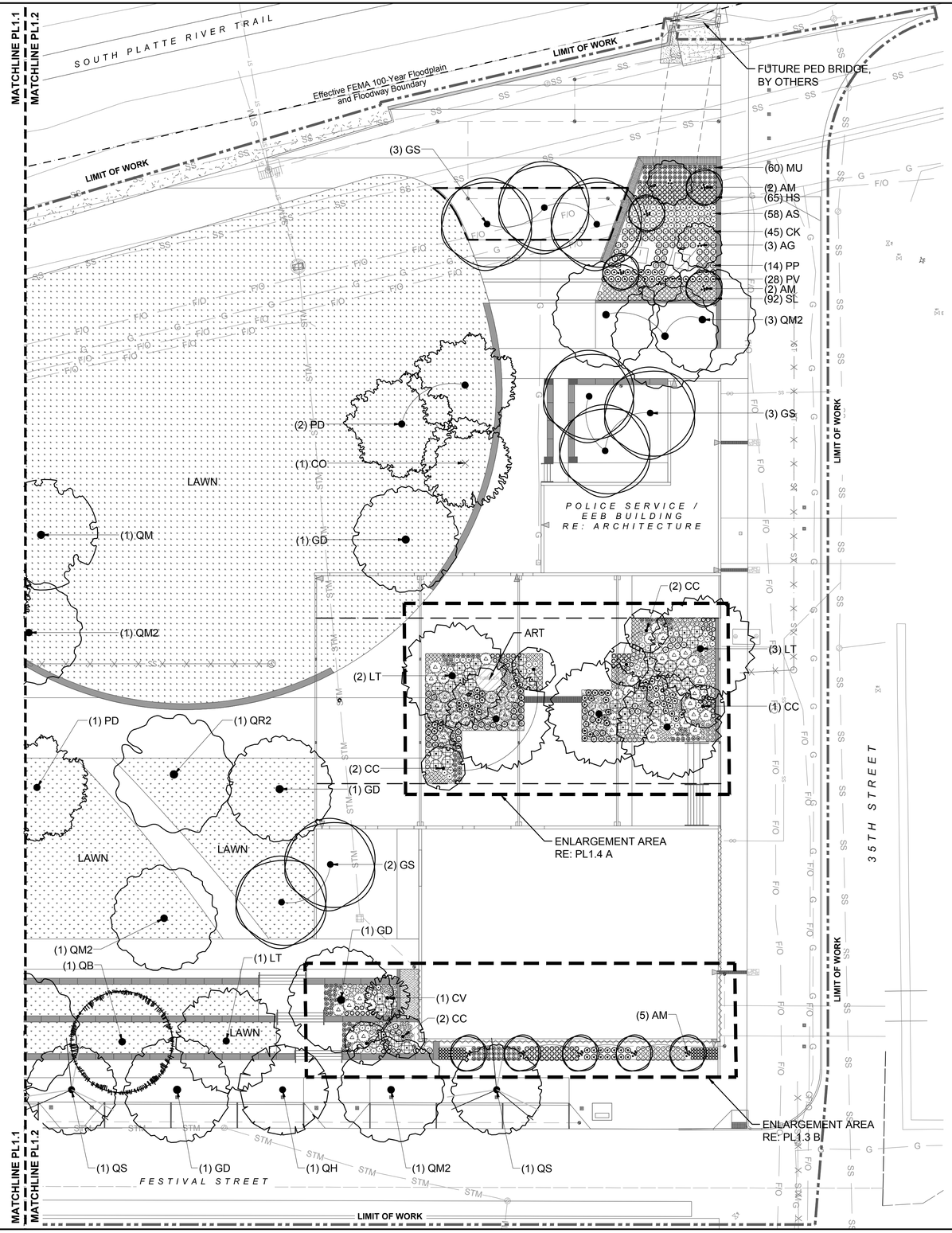

PLANTING LEGEND

- BLUEGRASS SOD LAWN
- RIPARIAN SEED MIX
- SHRUBS/PERRENIALS
- CONCRETE PAVING - RECYCLED SLAB
- CONCRETE UNIT PAVERS - PERMEABLE
- CRUSHER FINES PAVING

PLANT SCHEDULE

TREES	QTY	BOTANICAL NAME / COMMON NAME	CONT	CAL	REMARKS
AB	3	ACER NEGUNDO 'SENSATION'/ SENSATION BOX ELDER MAPLE	B & B	2.5"CAL	
AM	11	AMELANCHIER CANADENSIS / SHADBLOW SERVICEBERRY MULTITRUNK	B & B	6.0	MULTISTEM
AG	5	AMELANCHIER X GRANDIFLORA 'AUTUMN BRILLIANCE'/ 'AUTUMN BRILLIANCE' SERVICEBERRY	B & B	10.0	MULTISTEM
CO	6	CELTIS OCCIDENTALIS / COMMON HACKBERRY	B & B	2.5"CAL	
CC	7	CERCIS CANADENSIS / EASTERN REDBUD	B & B	2"CAL	
CV	2	CRATAEGUS VIRIDIS 'WINTER KING'/ 'WINTER KING' HAWTHORN	B & B	2"CAL	
GS	12	GLEDITSIA TRIACANTHOS INERMIS 'SHADEMASTER' TM / SHADEMASTER LOCUST	B & B	2.5"CAL	
GD	9	GYMNOCLADUS DIOICA 'ESPRESSO'/ KENTUCKY COFFEETREE	B & B	2.5"CAL	
LT	9	LIRIODENDRON TULIPIFERA / TULIP TREE	B & B	2.5"CAL	
PD	24	POPULUS DELTOIDES MONILIFERA / PLAINS COTTONWOOD	B & B	2.5"CAL	
QA	2	QUERCUS ALBA / WHITE OAK	B & B	2.5"CAL	
QB	2	QUERCUS BICOLOR / SWAMP WHITE OAK	B & B	2.5"CAL	
QH	3	QUERCUS HERITAGE / HERITAGE OAK	B & B	2.5"CAL	
QM	2	QUERCUS MACROCARPA / BURR OAK	B & B	2.5"CAL	
QM2	7	QUERCUS MUEHLENBERGII / CHINKAPIN OAK	B & B	2.5"CAL	
QR2	3	QUERCUS RUBRA / RED OAK	B & B	2.5"CAL	
QS	4	QUERCUS SHUMARDII / SHUMARD OAK	B & B	2.5"CAL	

SHRUBS	QTY	BOTANICAL NAME / COMMON NAME	SIZE	PLANT TYPE	REMARKS
CK	57	CORNUS SERICEA 'KELSEYI'/ KELSEYI DOGWOOD	5 GAL	SHRUB	AS SHOWN
MR2	126	MAHONIA REPENS / CREEPING MAHONIA	5 GAL	SHRUB	AS SHOWN
PM	16	PHYSOCARPUS MONOGYNUS / MOUNTAIN NINEBARK	5 GAL	SHRUB	AS SHOWN
PB	84	PRUNUS BESSEYI 'PAWNEE BUTTES'/ CREEPING WESTERN SAND CHERRY	5 GAL	SHRUB	AS SHOWN
RG2	69	RHUS AROMATICA 'GRO-LOW'/ GRO-LOW FRAGRANT SUMAC	5 GAL	SHRUB	AS SHOWN

ANNUALS/PERENNIALS	QTY	BOTANICAL NAME / COMMON NAME	SIZE	PLANT TYPE	REMARKS
AS	132	AGASTACHE RUPESTRIS 'SUNSET'/ SUNSET HYSSOP	1 GAL	PERENNIAL	AS SHOWN
LM	105	LAVANDULA ANGUSTIFOLIA 'MUNSTEAD'/ MUNSTEAD ENGLISH LAVENDER	1 GAL	PERENNIAL	AS SHOWN

GRASSES	QTY	BOTANICAL NAME / COMMON NAME	SIZE	PLANT TYPE	REMARKS
FB	72	FESTUCA GLAUCA 'BOULDER BLUE'/ BOULDER BLUE FESCUE	1 GAL	ORNAMENTAL GRASS	AS SHOWN
HS	226	HELICTOTRICHON SEMPERVIRENS 'SAPPHIRE'/ BLUE OAT GRASS	1 GAL	ORNAMENTAL GRASS	AS SHOWN
MU	227	MUHLENBERGIA REVERCHONI 'UNDAUNTED'/ UNDAUNTED MUHLY	1 GAL	ORNAMENTAL GRASS	AS SHOWN
PV	95	PANICUM VIRGATUM / SWITCH GRASS	5 GAL	ORNAMENTAL GRASS	AS SHOWN
PP	96	PANICUM VIRGATUM 'PRAIRIE SKY'/ PRAIRIE SKY SWITCH GRASS	5 GAL	ORNAMENTAL GRASS	AS SHOWN
PS	50	PANICUM VIRGATUM 'SHENANDOAH'/ SHENANDOAH RED SWITCH GRASS	5 GAL	ORNAMENTAL GRASS	AS SHOWN
SL	303	SCHIZACHYRIUM SCOPARIUM / LITTLE BLUESTEM GRASS	1 GAL	ORNAMENTAL GRASS	AS SHOWN

wenk
ASSOCIATES
PLANNERS & LANDSCAPE ARCHITECTS
303.628.0003

DENVER
THE MILE HIGH CITY

RIVER NORTH PARK

DENVER, COLORADO

NICOLE K. HORST
626
10/07/2008
Original Date of Licensure
STATE OF COLORADO
LICENSED LANDSCAPE ARCHITECT
FOR AND ON BEHALF OF WENK ASSOCIATES
NOT VALID WITHOUT ORIGINAL SIGNATURE

KEY PLAN:

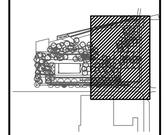

REVISIONS:

NAME	DATE

DRAWN BY: BP/TS

REVIEWED BY: NH

PROJECT NUMBER: 15014

DATE: **OCTOBER 2018**

ISSUE: BID SET

SHEET TITLE: PLANTING PLAN

SHEET NUMBER: PL1.2

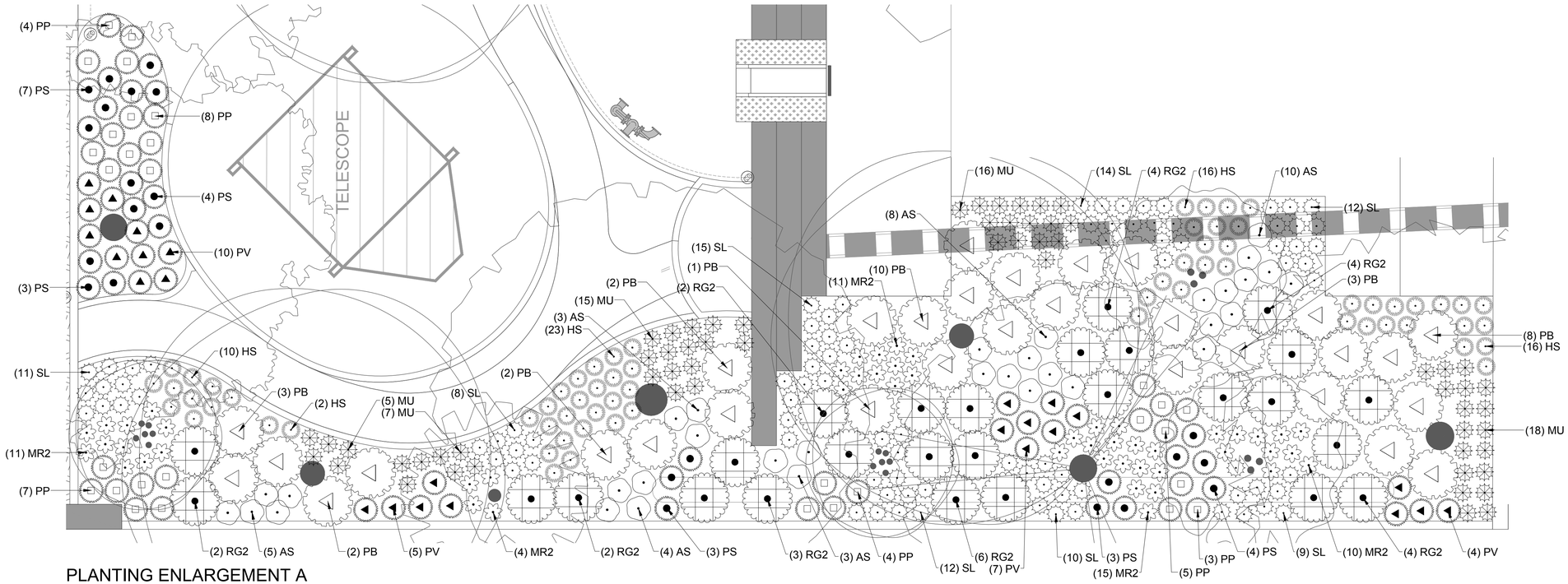

PLANTING ENLARGEMENT A

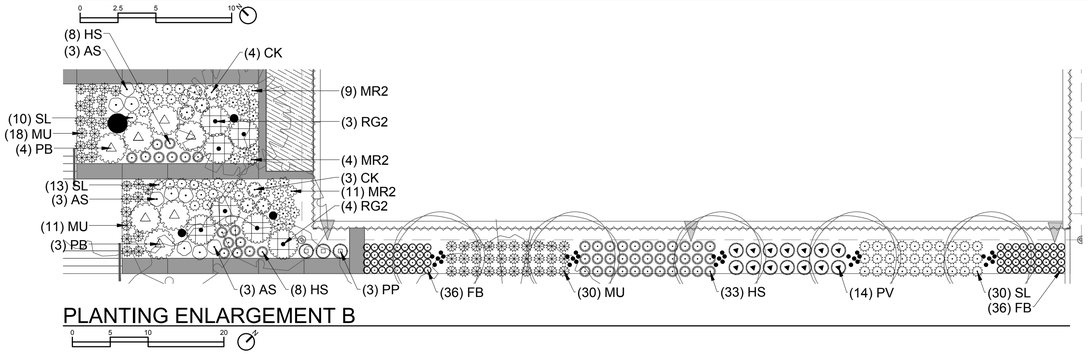

PLANTING ENLARGEMENT B

0 5 10 20

PLANTING LEGEND

- BLUEGRASS SOD LAWN
- RIPARIAN SEED MIX
- SHRUBS/PERRENIALS
- CONCRETE PAVING - RECYCLED SLAB
- CONCRETE UNIT PAVERS - PERMEABLE
- CRUSHER FINES PAVING

PLANT SCHEDULE

TREES	QTY	BOTANICAL NAME / COMMON NAME	CONT	CAL	REMARKS
AB	3	ACER NEGUNDO 'SENSATION'/ SENSATION BOX ELDER MAPLE	B & B	2.5"CAL	
AM	11	AMELANCHIER CANADENSIS / SHADBLOW SERVICEBERRY MULTITRUNK	B & B	6.0	MULTISTEM
AG	5	AMELANCHIER X GRANDIFLORA 'AUTUMN BRILLIANCE'/ 'AUTUMN BRILLIANCE' SERVICEBERRY	B & B	10.0	MULTISTEM
CO	6	CELTIS OCCIDENTALIS / COMMON HACKBERRY	B & B	2.5"CAL	
CC	7	CERCIS CANADENSIS / EASTERN REDBUD	B & B	2"CAL	
CV	2	CRATAEGUS VIRIDIS 'WINTER KING'/ 'WINTER KING' HAWTHORN	B & B	2"CAL	
GS	12	GLEDITSIA TRIACANTHOS INERMIS 'SHADEMASTER' TM / SHADEMASTER LOCUST	B & B	2.5"CAL	
GD	9	GYMNOCLADUS DIOICA 'ESPRESSO'/ KENTUCKY COFFEETREE	B & B	2.5"CAL	
LT	9	LIRIODENDRON TULIPIFERA / TULIP TREE	B & B	2.5"CAL	
PD	24	POPULUS DELTOIDES MONILIFERA / PLAINS COTTONWOOD	B & B	2.5"CAL	
QA	2	QUERCUS ALBA / WHITE OAK	B & B	2.5"CAL	
QB	2	QUERCUS BICOLOR / SWAMP WHITE OAK	B & B	2.5"CAL	
QH	3	QUERCUS HERITAGE / HERITAGE OAK	B & B	2.5"CAL	
QM	2	QUERCUS MACROCARPA / BURR OAK	B & B	2.5"CAL	
QM2	7	QUERCUS MUEHLENBERGII / CHINKAPIN OAK	B & B	2.5"CAL	
QR2	3	QUERCUS RUBRA / RED OAK	B & B	2.5"CAL	
QS	4	QUERCUS SHUMARDII / SHUMARD OAK	B & B	2.5"CAL	

SHRUBS	QTY	BOTANICAL NAME / COMMON NAME	SIZE	PLANT TYPE	REMARKS
CK	57	CORNUS SERICEA 'KELSEYI'/ KELSEYI DOGWOOD	5 GAL	SHRUB	AS SHOWN
MR2	126	MAHONIA REPENS / CREEPING MAHONIA	5 GAL	SHRUB	AS SHOWN
PM	16	PHYSOCARPUS MONOGYNUS / MOUNTAIN NINEBARK	5 GAL	SHRUB	AS SHOWN
PB	84	PRUNUS BESSEYI 'PAWNEE BUTTES'/ CREEPING WESTERN SAND CHERRY	5 GAL	SHRUB	AS SHOWN
RG2	69	RHUS AROMATICA 'GRO-LOW'/ GRO-LOW FRAGRANT SUMAC	5 GAL	SHRUB	AS SHOWN

ANNUALS/PERENNIALS	QTY	BOTANICAL NAME / COMMON NAME	SIZE	PLANT TYPE	REMARKS
AS	132	AGASTACHE RUPESTRIS 'SUNSET'/ SUNSET HYSSOP	1 GAL	PERENNIAL	AS SHOWN
LM	105	LAVANDULA ANGUSTIFOLIA 'MUNSTEAD'/ MUNSTEAD ENGLISH LAVENDER	1 GAL	PERENNIAL	AS SHOWN

GRASSES	QTY	BOTANICAL NAME / COMMON NAME	SIZE	PLANT TYPE	REMARKS
FB	72	FESTUCA GLAUCA 'BOULDER BLUE'/ BOULDER BLUE FESCUE	1 GAL	ORNAMENTAL GRASS	AS SHOWN
HS	226	HELICTOTRICHON SEMPERVIRENS 'SAPPHIRE'/ BLUE OAT GRASS	1 GAL	ORNAMENTAL GRASS	AS SHOWN
MU	227	MUHLENBERGIA REVERCHONI 'UNDAUNTED'/ UNDAUNTED MUHLY	1 GAL	ORNAMENTAL GRASS	AS SHOWN
PV	95	PANICUM VIRGATUM / SWITCH GRASS	5 GAL	ORNAMENTAL GRASS	AS SHOWN
PP	96	PANICUM VIRGATUM 'PRAIRIE SKY'/ PRAIRIE SKY SWITCH GRASS	5 GAL	ORNAMENTAL GRASS	AS SHOWN
PS	50	PANICUM VIRGATUM 'SHENANDOAH'/ SHENANDOAH RED SWITCH GRASS	5 GAL	ORNAMENTAL GRASS	AS SHOWN
SL	303	SCHIZACHYRIUM SCOPARIUM / LITTLE BLUESTEM GRASS	1 GAL	ORNAMENTAL GRASS	AS SHOWN

wenk
ASSOCIATES
PLANNERS & LANDSCAPE ARCHITECTS
303.628.0003

DENVER
THE MILE HIGH CITY

RIVER NORTH PARK

DENVER, COLORADO

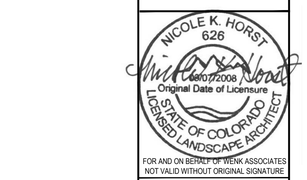

FOR AND ON BEHALF OF WENK ASSOCIATES
NOT VALID WITHOUT ORIGINAL SIGNATURE

KEY PLAN:

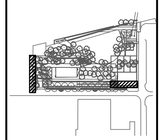

REVISIONS:

NAME	DATE

DRAWN BY:
BP/TS

REVIEWED BY:
NH

PROJECT NUMBER:
15014

DATE:
OCTOBER 2018

ISSUE:
BID SET

SHEET TITLE:
ENLARGEMENT

SHEET NUMBER:
PL1.3

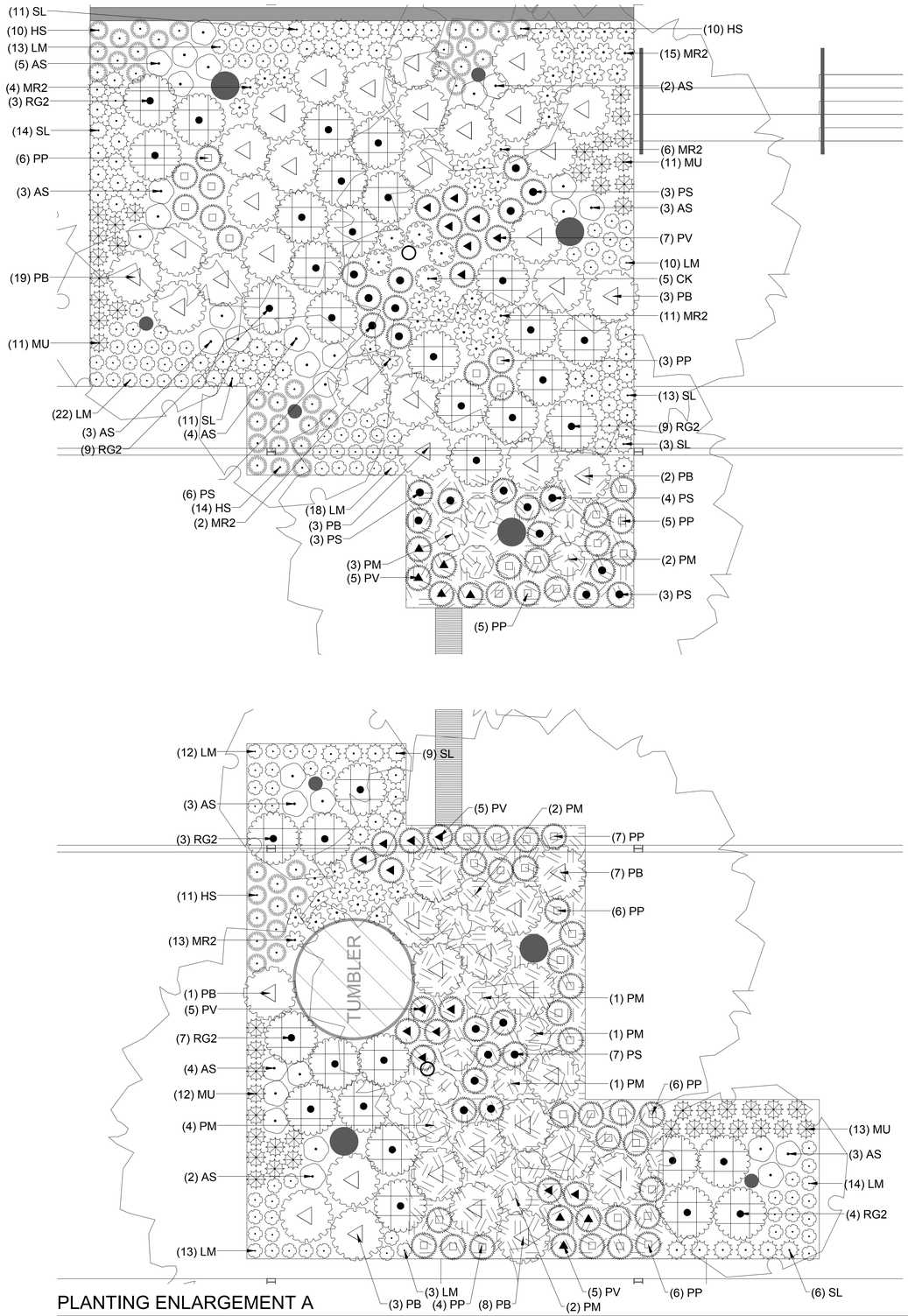

PLANTING ENLARGEMENT A

0 2.5 5 10

PLANTING LEGEND

- BLUEGRASS SOD LAWN
- RIPARIAN SEED MIX
- SHRUBS/PERRENIALS
- CONCRETE PAVING - RECYCLED SLAB
- CONCRETE UNIT PAVERS - PERMEABLE
- CRUSHER FINES PAVING

PLANT SCHEDULE

TREES	QTY	BOTANICAL NAME / COMMON NAME	CONT	CAL	REMARKS
AB	3	ACER NEGUNDO 'SENSATION'/ SENSATION BOX ELDER MAPLE	B & B	2.5"CAL	
AM	11	AMELANCHIER CANADENSIS / SHADBLOW SERVICEBERRY MULTITRUNK	B & B	6.0	MULTISTEM
AG	5	AMELANCHIER X GRANDIFLORA 'AUTUMN BRILLIANCE'/ 'AUTUMN BRILLIANCE'SERVICEBERRY	B & B	10.0	MULTISTEM
CO	6	CELTIS OCCIDENTALIS / COMMON HACKBERRY	B & B	2.5"CAL	
CC	7	CERCIS CANADENSIS / EASTERN REDBUD	B & B	2"CAL	
CV	2	CRATAEGUS VIRIDIS 'WINTER KING'/ 'WINTER KING'HAWTHORN	B & B	2"CAL	
GS	12	GLEDITSIA TRIACANTHOS INERMIS 'SHADEMASTER'TM / SHADEMASTER LOCUST	B & B	2.5"CAL	
GD	9	GYMNOCLADUS DIOICA 'ESPRESSO'/ KENTUCKY COFFEETREE	B & B	2.5"CAL	
LT	9	LIRIODENDRON TULIPIFERA / TULIP TREE	B & B	2.5"CAL	
PD	24	POPULUS DELTOIDES MONILIFERA / PLAINS COTTONWOOD	B & B	2.5"CAL	
QA	2	QUERCUS ALBA / WHITE OAK	B & B	2.5"CAL	
QB	2	QUERCUS BICOLOR / SWAMP WHITE OAK	B & B	2.5"CAL	
QH	3	QUERCUS HERITAGE / HERITAGE OAK	B & B	2.5"CAL	
QM	2	QUERCUS MACROCARPA / BURR OAK	B & B	2.5"CAL	
QM2	7	QUERCUS MUEHLENBERGII / CHINKAPIN OAK	B & B	2.5"CAL	
QR2	3	QUERCUS RUBRA / RED OAK	B & B	2.5"CAL	
QS	4	QUERCUS SHUMARDII / SHUMARD OAK	B & B	2.5"CAL	

SHRUBS	QTY	BOTANICAL NAME / COMMON NAME	SIZE	PLANT TYPE	REMARKS
CK	57	CORNUS SERICEA 'KELSEYI'/ KELSEYI DOGWOOD	5 GAL	SHRUB	AS SHOWN
MR2	126	MAHONIA REPENS / CREEPING MAHONIA	5 GAL	SHRUB	AS SHOWN
PM	16	PHYSOCARPUS MONOGYNUS / MOUNTAIN NINEBARK	5 GAL	SHRUB	AS SHOWN
PB	84	PRUNUS BESSEYI 'PAWNEE BUTTES'/ CREEPING WESTERN SAND CHERRY	5 GAL	SHRUB	AS SHOWN
RG2	69	RHUS AROMATICA 'GRO-LOW'/ GRO-LOW FRAGRANT SUMAC	5 GAL	SHRUB	AS SHOWN

ANNUALS/PERENNIALS	QTY	BOTANICAL NAME / COMMON NAME	SIZE	PLANT TYPE	REMARKS
AS	132	AGASTACHE RUPESTRIS 'SUNSET'/ SUNSET HYSSOP	1 GAL	PERENNIAL	AS SHOWN
LM	105	LAVANDULA ANGUSTIFOLIA 'MUNSTEAD'/ MUNSTEAD ENGLISH LAVENDER	1 GAL	PERENNIAL	AS SHOWN

GRASSES	QTY	BOTANICAL NAME / COMMON NAME	SIZE	PLANT TYPE	REMARKS
FB	72	FESTUCA GLAUCA 'BOULDER BLUE'/ BOULDER BLUE FESCUE	1 GAL	ORNAMENTAL GRASS	AS SHOWN
HS	226	HELICTOTRICHON SEMPERVIRENS 'SAPPHIRE'/ BLUE OAT GRASS	1 GAL	ORNAMENTAL GRASS	AS SHOWN
MU	227	MUHLENBERGIA REVERCHONI 'UNDAUNTED'/ UNDAUNTED MUHLY	1 GAL	ORNAMENTAL GRASS	AS SHOWN
PV	95	PANICUM VIRGATUM / SWITCH GRASS	5 GAL	ORNAMENTAL GRASS	AS SHOWN
PP	96	PANICUM VIRGATUM 'PRAIRIE SKY'/ PRAIRIE SKY SWITCH GRASS	5 GAL	ORNAMENTAL GRASS	AS SHOWN
PS	50	PANICUM VIRGATUM 'SHENANDOAH'/ SHENANDOAH RED SWITCH GRASS	5 GAL	ORNAMENTAL GRASS	AS SHOWN
SL	303	SCHIZACHYRIUM SCOPARIUM / LITTLE BLUESTEM GRASS	1 GAL	ORNAMENTAL GRASS	AS SHOWN

wenk
ASSOCIATES
PLANNERS & LANDSCAPE ARCHITECTS
303.628.0003

DENVER
THE MILE HIGH CITY

RIVER NORTH PARK

DENVER, COLORADO

NICOLE K. HORST
626
10/07/2008
Original Date of Licensure
STATE OF COLORADO
LICENSED LANDSCAPE ARCHITECT
FOR AND ON BEHALF OF WENK ASSOCIATES
NOT VALID WITHOUT ORIGINAL SIGNATURE

KEY PLAN:

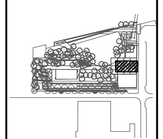

REVISIONS:

NAME	DATE

DRAWN BY: BP/TS

REVIEWED BY: NH

PROJECT NUMBER: 15014

DATE: **OCTOBER 2018**

ISSUE: BID SET

SHEET TITLE: ENLARGEMENT

SHEET NUMBER: PL1.4

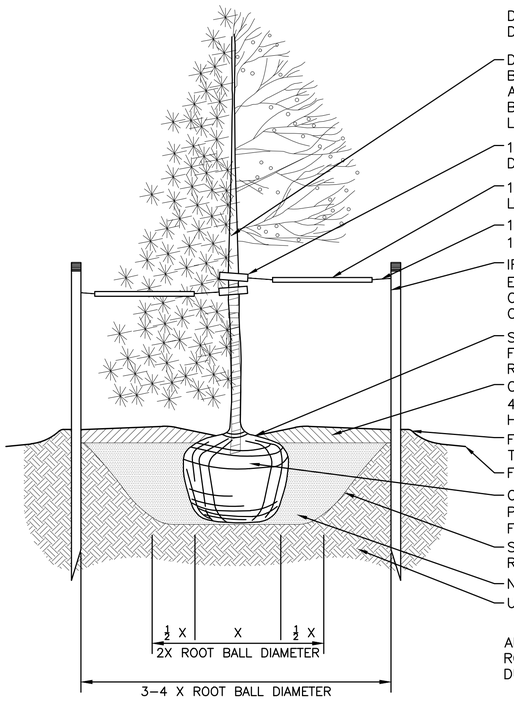

DO NOT CUT SINGLE LEADER. PRUNE ONLY DAMAGED, DEAD WOOD, OR CO–DOMINANT LEADERS.

DECIDUOUS TREE FALL PLANTING: WRAP TRUNK TO FIRST BRANCH WITH SPECIFIED TREE WRAP MATERIAL. SECURE AT TOP WITH MASKING TAPE. DO NOT WRAP ROUGH BARK TREES. REMOVE TRUNK WRAP IN SPRING AFTER LAST FROST.

12" NYLON TREE STRAP WITH GROMMETS ON GUY WIRE. DO NOT TWIST STRAPS TIGHT AROUND TRUNK.

1/2" DIAMETER WHITE PVC PIPE SECTION ON ENTIRE LENGTH OF EACH WIRE.

14–GAUGE GALVANIZED WIRE, DOUBLE STRAND. LEAVE 1–2" SLACK IN WIRE TO ALLOW FOR TRUNK MOVEMENT.

IF NEEDED, 6' STEEL T–POST OR WOOD STAKE (4' EXPOSED, 2' IN UNDISTURBED SUBGRADE) WITH SAFETY CAPS, SET TO WINDWARD SIDE AND OTHER OPPOSITE; OR OTHER PRE–APPROVED STAKING METHOD.

SET TOP OF ROOT FLARE 2 TO 3" HIGHER THAN FINISHED GRADE. REMOVE EXCESS SOIL FROM TOP OF ROOT BALL.

CIRCLE OF SHREDDED WOOD MULCH, 3" DEEP AND 4–6" AWAY FROM TRUNK, TO OUTER EDGE OF PLANTING HOLE.

FORM 2" HIGH DIRT SAUCER AROUND PIT AT OUTSIDE OF TRANSITION ZONE.

FINISH GRADE

COMPLETELY REMOVE ALL TWINE AND WIRE BASKET. PULL BURLAP DOWN MINIMUM OF 2/3, CUT AND REMOVE FROM PIT.

SLOPE SIDES OF PLANTING PIT AS SHOWN, ROUGHEN SIDES PRIOR TO BACKFILL.

NATIVE SOIL OR APPROPRIATE PLANTING MEDIA.

UNDISTURBED SUBGRADE.

ANY BROKEN, CRUMBLING, OR OTHERWISE DAMAGED ROOTBALL SHOULD BE REJECTED. DO NOT DAMAGE DURING PLANTING.

TREES PLANTED UPON PARK LAND, PUBLIC PROPERTY, OR WITHIN THE PUBLIC RIGHT OF WAY (PRW) ARE SUBJECT TO THE FOLLOWING RESTRICTIONS:

- AN APPROVED PLANTING PERMIT FROM THE OFFICE OF THE CITY FORESTER (OCF), REGARDLESS OF APPROVED PLANS, IS REQUIRED PRIOR TO PLANTING.
- ADMINISTRATIVE CITATIONS UP TO $999 SHALL BE ISSUED FOR TREES PLANTED WITHOUT AN OCF ISSUED PERMIT.
- ONLY TREE SPECIES APPROVED BY OR LISTED ON THE OCF'S APPROVED STREET TREE LIST SHALL BE PLANTED IN THE PRW.
- FOR A LIST OF PROHIBITED OR SUSPENDED PRW TREES, CONTACT OR VISIT THE OCF WEBSITE.
- IF OVERHEAD UTILITY WIRES EXIST IN THE PRW, ONLY ORNAMENTAL OR TREES MATURING AT 20 (TWENTY) FEET MAXIMUM HEIGHT SHALL BE PLANTED.
- TREES SHALL BE CENTERED IN TREE LAWNS AND/OR PLANTING AREAS.
- TREES SHALL NOT BE PLANTED IN TREE LAWNS LESS THAN FIVE FEET WIDE UNLESS AUTHORIZED BY THE OCF.
- WHERE SIDEWALKS ARE NOT PRESENT, TREES SHALL BE LOCATED AS DESIGNATED BY OFFICE OF THE CITY FORESTER.
- PLANTING IN CORNER TRIANGLE FORMED BY THE FIRST 30 (THIRTY) FEET ALONG THE PRW IN EACH DIRECTION FROM THE CORNER IS NOT PERMITTED.
- PLANTING WITHIN 10 (TEN) FEET OF ALLEYS, DRIVEWAYS, OR FIRE HYDRANTS IS NOT PERMITTED.
- PLANTING WITHIN 20 (TWENTY) FEET OF STOP SIGNS IS NOT PERMITTED.
- PLANTING WITHIN 25 (TWENTY–FIVE) FEET OF STREET LIGHTS IS NOT PERMITTED.
- PLANTING WITHIN FIVE FEET OF WATER METERS OR PITS IS NOT PERMITTED.
- LARGE SHADE TREES SHALL BE SPACED 35 (THIRTY–FIVE) FEET O.C. AND ORNAMENTAL TREES 25 (TWENTY–FIVE) FEET O.C. OR AS DESIGNATED BY OCF.
- TREES SHALL BE PRUNED TO MAINTAIN A CLEARANCE OF 13'–6" OVER STREETS AND ALLEYS AND 6'–6" OVER REMAINING PORTIONS OF PRW, INCLUDING SIDEWALK.

PRIOR TO DIGGING, THE UTILITY NOTIFICATION CENTER OF COLORADO SHALL BE CONTACTED AT 811 TO LOCATE UNDERGROUND UTILITIES.

□□ E I O □□ □ TREE P □ ANTIN □

NOT TO SCALE

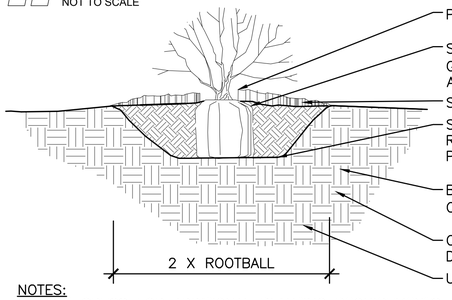

PULL MULCH MIN. 3" BACK FROM SHRUB BASE

SET TOP OF ROOTBALL 1" ABOVE ADJACENT GRADE. IN BERMED AREAS SET ROOTBALL 1" ABOVE LOWER ADJACENT GRADE.

SHREDDED WOOD MULCH AT 4" DEPTH

SCORE ROOT BALL & TEASE ROOTS OUTWARD TO ENCOURAGE PENETRATION INTO BACKFILL.

BACKFILL PLANTING PIT WITH 1/3 COMPOST 2/3 EXCAVATED SOIL.

COMPACT OVER–EXCAVATION TO DENSITY OF ADJACENT SOIL.

UNDISTURBED SUBGRADE

NOTES:

1. SEE SPECS FOR ADDITIONAL PLANTING REQUIREMENTS.
2. PLUMB AND ORIENT PLANTS FOR BEST APPEARANCE.
3. REMOVE ALL TWINE FROM ROOT BALL, AND FOLD BURLAP BACK 2/3.
4. REMOVE PLASTIC BURLAP ENTIRELY. FOR CONTAINER SHRUBS, CAREFULLY REMOVE CONTAINER AND SCORE ROOT BALL.
5. SEE PLANTING PLAN FOR MORE INFORMATION.

□□ □HR □□ P □ANTIN □

1" □ 1'-0"

TREE PROTECTION □ONES

THE TREE PROTECTION ZONE (TPZ) SHALL BE EQUAL TO EIGHTEEN INCHES (18") RADIALLY FROM THE TREE FOR EVERY ONE INCH OF TRUNK DIAMETER AT BREAST HEIGHT (DBH = 4.5' ABOVE SOIL LINE).

THE CRITICAL ROOT ZONE (CRZ) SHALL BE EQUAL TO TWELVE INCHES (12") RADIALLY FROM THE TREE FOR EVERY ONE INCH OF TRUNK DIAMETER AT BREAST HEIGHT (DBH = 4.5' ABOVE SOIL LINE).

THE STRUCTURAL ROOT ZONE (SRZ) SHALL BE EQUAL TO 0.9' (10.8") RADIALLY FROM THE TREE FOR EVERY ONE INCH OF TRUNK DIAMETER AT BREAST HEIGHT (DBH = 4.5' ABOVE SOIL LINE).

AREA 1

DENOTES PERIMETER OF TREE PROTECTION ZONE (TPZ)

TREE PROTECTION ZONE MUST BE IN PLACE AND APPROVED BY THE OFFICE OF THE CITY FORESTER (OCF) PRIOR TO COMMENCEMENT OF WORK. ONCE APPROVED, TPZ MAY NOT BE RESIZED OR REMOVED AT ANY TIME WITHOUT PRIOR APPROVAL FROM OCF. WORK WITHIN THE CRZ MUST TAKE PLACE IN ACCORDANCE WITH THE CONDITIONS ESTABLISHED BY THE OCF. DIGGING, GRUBBING, EXCAVATING, TRENCHING, CHANGING OF GRADE, OR OTHER ACTIONS THAT MAY POTENTIALLY IMPACT THE ROOTING ENVIRONMENT IS STRICTLY PROHIBITED.

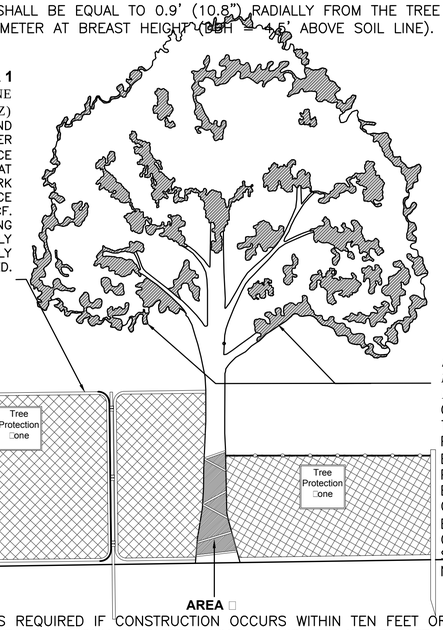

AREA 2

LOWER CANOPY PROTECTION

CONTACT OFFICE OF THE CITY FORESTER IF POTENTIAL FOR DAMAGE EXISTS AND/OR IF PRUNING, INCLUDING BUT NOT LIMITED TO CLEARANCE FOR BUILDING(S) AND/OR CONSTRUCTION SCAFFOLDING, IS NEEDED.

TREE PROTECTION ZONE SIGNS SHALL BE POSTED BY OFFICE OF THE CITY FORESTER AND SHALL REMAIN IN PLACE SO LONG AS TREE PROTECTION FENCING IS IN PLACE.

AREA □

TRUNK PROTECTION IS REQUIRED IF CONSTRUCTION OCCURS WITHIN TEN FEET OR LESS OF TRUNK. CONSTRUCTION INSIDE CRZ IS ONLY PERMITTED WHEN EQUIPMENT IS OPERATED EXCLUSIVELY ON EXISTING HARDSCAPE, AND NO SOIL COMPACTION TAKES PLACE. ANY WORK IN CRZ MUST BE APPROVED BY OFFICE OF THE CITY FORESTER PRIOR TO COMMENCEMENT OF ACTIVITY.

NOTES

1. OFFICE OF THE CITY FORESTER TREE RETENTION AND PROTECTION SPECIFICATIONS SHALL BE FOLLOWED THROUGHOUT DURATION OF PROJECT.
2. DAMAGE TO PROTECTED TREES IS SUBJECT TO PENALTY PER CITY ORDINANCE.
3. TREE PROTECTION SHALL BE INSTALLED PRIOR TO COMMENCEMENT OF DEMOLITION/CONSTRUCTION ACTIVITIES, APPROVED BY OFFICE OF THE CITY FORESTER STAFF, AND SHALL REMAIN IN PLACE UNTIL CERTIFICATE OF OCCUPANCY IS ISSUED BY THE CITY & COUNTY OF DENVER.
4. ONCE APPROVED BY THE OFFICE OF THE CITY FORESTER, THE TREE PROTECTION ZONE SHALL NOT BE RESIZED, MODIFIED, REMOVED, OR ALTERED IN ANY MANNER WITHOUT PRIOR WRITTEN APPROVAL.
5. ENTRANCE/ACCESS TO THE TREE PROTECTION ZONE IS NOT PERMITTED WITHOUT PRIOR WRITTEN APPROVAL FROM THE OFFICE OF THE CITY FORESTER.
6. NO MATERIALS, DEBRIS, EQUIPMENT, OR SITE AMENITIES SHALL BE STORED WITHIN THE TREE PROTECTION ZONE WITHOUT PRIOR WRITTEN APPROVAL FROM THE OFFICE OF THE CITY FORESTER.
7. WHILE TREE PROTECTION FENCING IS IN PLACE, TREES SHALL BE DEEP–ROOT WATERED AT AN INTERVAL OF ONCE PER WEEK WHEN TEMPERATURES ARE AT OR ABOVE 50–DEGREES F. TREES SHALL BE WATERED AT THE RATE OF 10 GALLONS PER INCH CALIPER.
8. MINIMUM TREE PROTECTION ZONE, AREA 1 FENCING SHALL BE "ORANGE PLASTIC SAFETY FENCING," MIN. 48" IN HEIGHT, TOP SECURED TO METAL T–POSTS WITH 12–GAUGE WIRE WOVEN THROUGH TOP OF FENCING FOR ENTIRE LENGTH.
   - HEAVY DUTY T–POSTS SHALL BE PLACED SO THAT WIRE & FENCE ARE TAUT.
   - CHAIN LINK FENCING IS RECOMMENDED AND MAY BE REQUIRED BY THE OFFICE OF THE CITY FORESTER WHERE HEAVY CONSTRUCTION ACTIVITY IS ADJACENT TO EXISTING TREES.
   - "TREE PROTECTION ZONE" SIGNS SHALL REMAIN IN PLACE AS POSTED BY OFFICE OF THE CITY FORESTER AND SHALL BE MAINTAINED IN THE CONDITION IN WHICH THEY WERE INSTALLED.

REVISIONS	MARK	BULLETIN	DATE	PREPARED BY OFFICE OF THE CITY FORESTER (OCF) PARKS AND RECREATION DEPARTMENT	CITY AND COUNTY OF DENVER 201 W. COLFAX AVE. DENVER, COLORADO 80202	STANDARD TREE DETAIL FOR TREE PROTECTION □ONE	NOT TO SCALE
							DATE: Oct. 2017
							DIAGRAM P-3

□□ TREE PROTE □ TION

NOT TO SCALE

wenk
ASSOCIATES
PLANNERS & LANDSCAPE ARCHITECTS
303.628.0003

DENVER
THE MILE HIGH CITY

RIVER NORTH PARK

DENVER, COLORADO

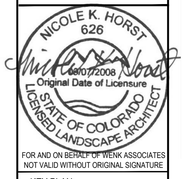

KEY PLAN:

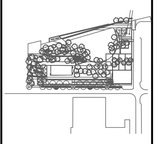

REVISIONS:

NAME	DATE

DRAWN BY: BP/TS

REVIEWED BY: NH

PROJECT NUMBER: 15014

DATE: **OCTOBER 2018**

ISSUE: BID SET

SHEET TITLE: PLANTING DETAILS

SHEET NUMBER: PL4.1

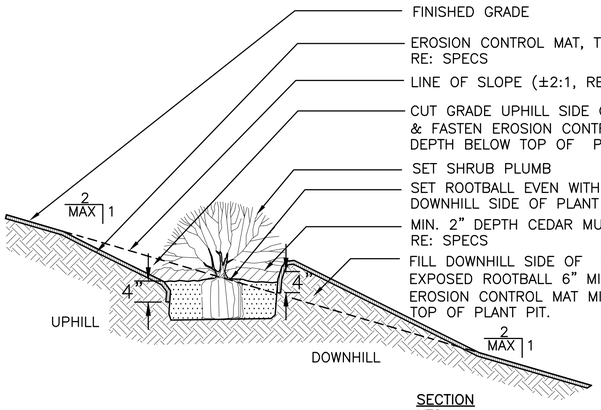

SECTION
NTS

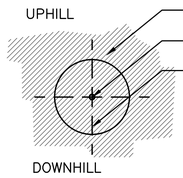

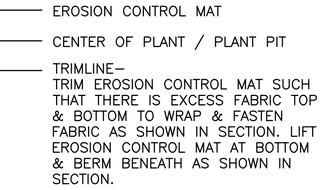

PLAN
NTS

NOTES:
1. REFER TO SHRUB PLANTING DETAIL 2/PL4.1 FOR ADDITIONAL INFORMATION.
2. THIS INSTALLATION SHALL APPLY TO ALL SHRUBS, PERENNIALS & GROUNDCOVERS PLANTED ON SLOPES GREATER THAN 5:1.
3. REFERENCE PLANS FOR GRADING INFORMATION.

□□ □HR□□ P□ANTIN□ ON □□OPE
1" □ 1'-0"

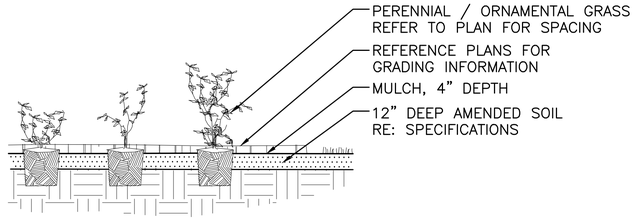

□□ □RO□ N□□OVER P□ANTIN□
1" □ 1'-0"

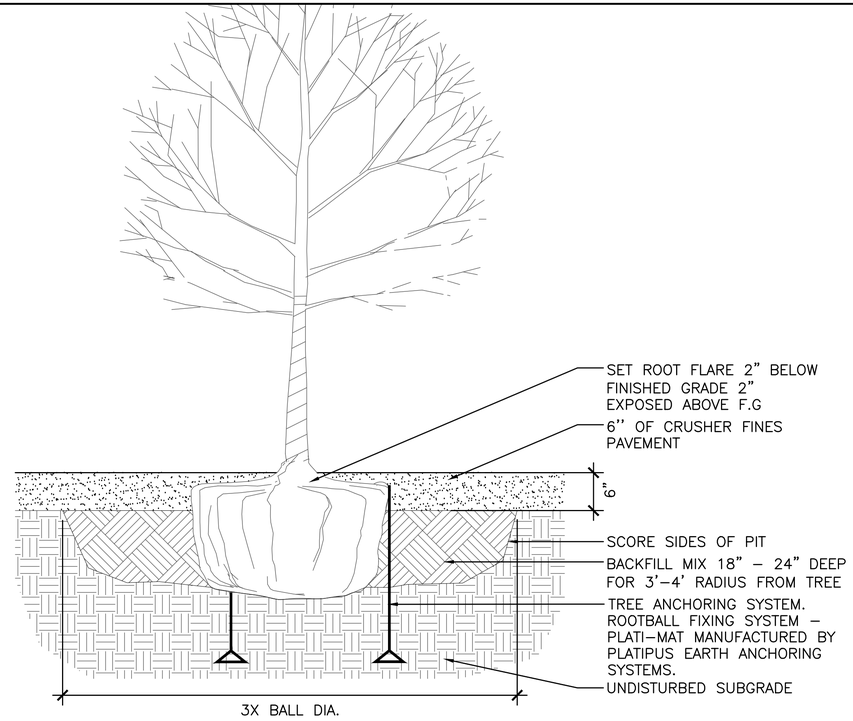

□□ TREE IN □R□□HER □INE□
1" □ 1'-0"

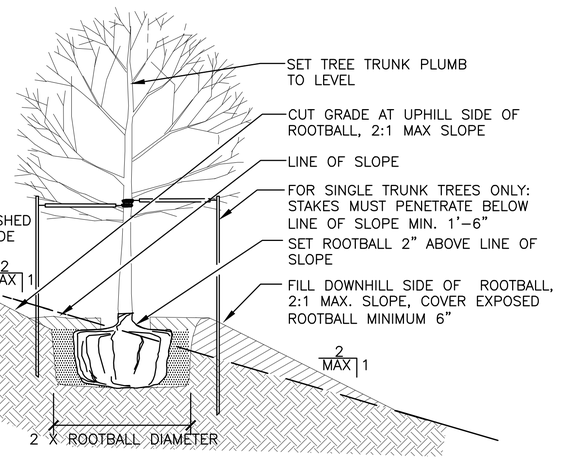

NOTES:
1. REFER TO DECIDUOUS TREE DETAIL FOR STAKING, GUYING, MULCHING, ETC.
2. THIS INSTALLATION SHALL APPLY TO ALL TREE TYPES AND SIZES PLANTED ON SLOPES TO A MAXIMUM OF 3:1.

□□ □E□I□O□□ TREE P□ANTIN□ ON □□OPE
1" □ 1'-0"

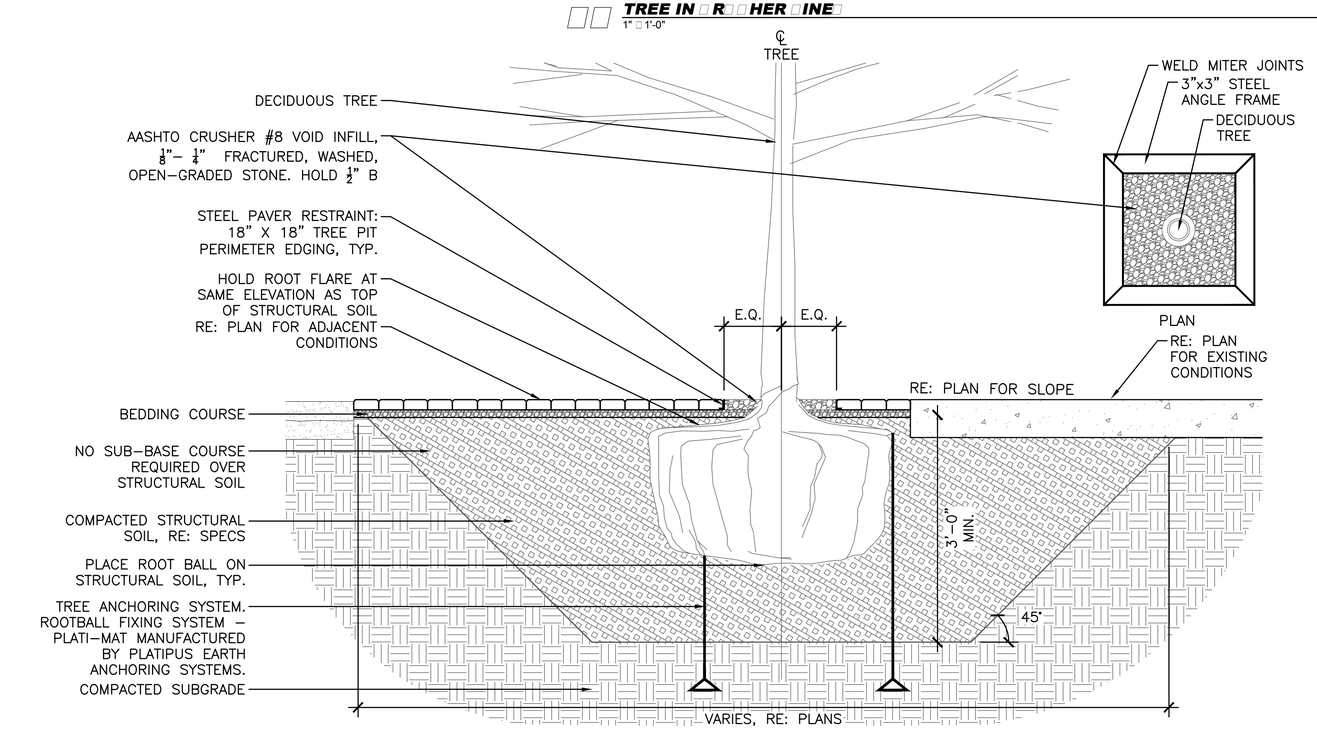

NOTES:
1. REFERENCE PLANS FOR EXTENTS OF STRUCTURAL SOIL PITS.

□□ TREE IN □TR□□T □RA□□OI□
1" □ 1'-0"

wenk
ASSOCIATES
PLANNERS & LANDSCAPE ARCHITECTS
303.628.0003

DENVER
THE MILE HIGH CITY

RIVER NORTH PARK
DENVER, COLORADO



FOR AND ON BEHALF OF WENK ASSOCIATES
NOT VALID WITHOUT ORIGINAL SIGNATURE

KEY PLAN:

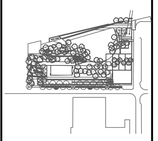

REVISIONS:
NAME DATE

DRAWN BY:
BP/TS

REVIEWED BY:
NH

PROJECT NUMBER:
15014

DATE:
OCTOBER 2018

ISSUE:
BID SET

SHEET TITLE:
PLANTING DETAILS

SHEET NUMBER:
PL4.2

Irrigation Schedule

SYMBOL	MANUFACTURER	MODEL NO.	DESCRIPTION	DETAIL NO.
	RAIN BIRD	1806-SAM-PRS WITH MPR SERIES NOZZLE	POPUP SPRAY HEAD	7
	RAIN BIRD	1812 SAM-PRS W/ MPR SERIES NOZ.	HI-POP SPRAY HEAD	7
#2 #4 #8 #8	HUNTER	I-20-06-SS WITH # NOZZLE	GEAR DRIVEN ROTOR	8
#2 #4 #4 #4	HUNTER	I-20-12-SS WITH # NOZZLE	HI-POP GEAR DRIVEN ROTOR	8
	RAIN BIRD	PESB-PRS-D- W/ SB-DAC1 DECODER	ELECTRIC CONTROL VALVE W/ DECODER	11, 12
	BUCKNER	QB44RCAR10	QUICK COUPLING VALVE	5
A	TORO	TORO SENTINEL SBTW-AC2WIRE-U2-SB18SS-PCDG/VRA-GFI-FK	ELECTRIC CONTROLLER - 2 WIRE	15
N/S	TORO		HAND-HELD REMOTE	N/S
R	HUNTER	WR-CLIK	RAIN SHUT-OFF DEVICE	14
	FEBCO	825 YA	BACKFLOW PREVENTION DEVICE	9
	NETAFIM	# LHM2TG1-MEL-NO	HYDROMETER - 24v, NO	9
N/S	GUARDSHACK	GS-M1 W/ SENTRY SC75-200 LOCKING DEVICE	BACKFLOW ENCLOSURE	10

Irrigation Schedule

SYMBOL	MANUFACTURER	MODEL NO.	DESCRIPTION	DETAIL NO.
N/S	MCDONALD	6101 SERIES	MANUAL DRAIN VALVE	6
	LEEMCO	GASKETED PUSH ON W/ SQ. NUT	GATE VALVE W/ RESTRAINTS	4
		CLASS 200 BE - 2.5" & SMALLER	PVC MAINLINE	1
N/S	LEEMCO		MECHANICAL JOINT RESTRAINTS	3
		CLASS 200 BE	PVC LATERAL -1" MIN.	1
		CLASS 200	PVC SLEEVING	2
	NETAFIM	TLCV6-18 ROWS SPACED 18"	SUBSURFACE DRIPLINE	17&18
	NETAFIM	TLCV6-12 RINGS SPACED PER DETAIL	SUBSURFACE DRIPLINE RING - TREE	16
			TREE RING BLOW-OUT STUB	19
M			WATER METER	RE: CIVIL
N/S	TORO	SB-DAC-1	VALVE DECODER (1 ST.)	11&12
G	TORO	SB-BLA	GROUNDING LOCATION	13
N/S	PAIGE	P7171D	SENSOR WIRE	N/S
N/S	PAIGE	P7350D	2-WIRE DECODER CABLE	N/S
			CONTROLLER & STATION NO.	
			CONTROL VALVE SIZE	

811 Know what's below. Call before you dig.
CALL 3 BUSINESS DAYS IN ADVANCE BEFORE YOU DIG, GRADE, OR EXCAVATE FOR THE MARKING OF UNDERGROUND MEMBER UTILITIES.

CONTRACTOR TO BID THE "PRS-D" PRESSURE REGULATORS ON THE CONTROL VALVE ASSEMBLIES. BEFORE ORDERING THESE UNITS, ONCE SYSTEM IS INSTALLED AND OPERATING, COORDINATE WITH PROJECT MANAGER AND CONSULTANT, AS TO WHAT ZONES MAY OR MAY NOT REQUIRE PRESSURE REGULATION. CREDIT WILL BE ISSUED BACK TO CITY IF NOT INSTALLED. REFER TO CITY OF DENVER PARKS GENERAL NOTES AND SPECIFICATIONS IN DEALING WITH THE SITUATION.

Irrigation Construction Notes

1. DRAWINGS AND BASE INFORMATION – ALL BASE AND PLANTING INFORMATION HAVE BEEN PROVIDED BY WENK. THE CONTRACTOR IS RESPONSIBLE TO NOTIFY HYDROSYSTEMS*KDI OF ANY DISCREPANCIES BETWEEN THE UTILITY OR PLANTING PLANS AND THE IRRIGATION PLAN. IF CONTRACTOR FAILS TO NOTIFY HYDROSYSTEMS*KDI AND MAKES CHANGES TO THE IRRIGATION SYSTEM DESIGN, HE ASSUMES ALL COSTS AND LIABILITIES ASSOCIATED WITH THOSE FIELD CHANGES. REFER TO SPECIFICATIONS FOR ADDITIONAL PROJECT REQUIREMENTS.

2. SYSTEM PRESSURE – HYDROSYSTEMS*KDI HAS CONTACTED DENVER PARKS AND RECREATION AND THEY HAVE BEEN TOLD THAT THE STATIC WATER PRESSURE SHOULD BE 75 PSI MIN. THE CONTRACTOR IS RESPONSIBLE TO FIELD VERIFY PRESSURE PRIOR TO COMMENCING ANY CONSTRUCTION AND NOTIFY HYDROSYSTEMS*KDI OF ANY VARIANCE FROM THE STATED PRESSURE. IF CONTRACTOR FAILS TO FIELD VERIFY PRESSURE AND/OR NOTIFY HYDROSYSTEMS*KDI OR ANY VARIATIONS FROM THIS PRESSURE, THEN HE ASSUMES ALL CONSTRUCTION AND ENGINEERING COSTS ASSOCIATED WITH SYSTEM MODIFICATIONS REQUIRED TO ACCOMMODATE ACTUAL SITE PRESSURE. THIS SYSTEM HAS BEEN DESIGNED FOR A REQUIRED DISCHARGE PRESSURE OF 75 PSI MINIMUM.

3. IRRIGATION SYSTEM OPERATION INTENT – THIS IRRIGATION SYSTEM HAS BEEN DESIGNED TO IRRIGATE THE ESTABLISHED LANDSCAPE WITHIN A THREE NIGHT PER WEEK, EIGHT HOUR PER NIGHT WATERING WINDOW. ESTABLISHMENT WATERING WILL REQUIRE UP TO TWICE AS MUCH IRRIGATION FOR A FOUR TO SIX WEEK PERIOD. THE DESIGN IS BASED ON THE FOLLOWING PROJECTED WEEKLY APPLICATION RATES AFTER ESTABLISHMENT. THESE FIGURES ARE BASED ON A 30-YEAR AVERAGE WEATHER DATA AND WILL NEED TO BE ADJUSTED DUE TO SEASONAL CHANGES AND WEATHER CONDITIONS ABOVE AND BELOW THE AVERAGE VALUES UTILIZED.

BLUEGRASS TURF	2.22" PER WEEK PEAK SEASON
ORNAMENTAL PLANTINGS	0.93" PER WEEK PEAK SEASON
NATIVE SEED MIXES	0.77" PER WEEK PEAK SEASON (TWO SEASONS)

NOTE: IT IS THE INTENT OF THIS DESIGN THAT NATIVE AREAS WOULD ONLY BE IRRIGATED FOR ESTABLISHMENT.

4. EQUIPMENT INSTALLATION – IT IS THE INTENT OF THIS DESIGN THAT ALL IRRIGATION EQUIPMENT BE INSTALLED WITHIN PROPERTY LIMITS AND WITHIN LANDSCAPED AREAS. ANY EQUIPMENT SHOWN OUTSIDE OF THESE LIMITS IS SHOWN IN THAT LOCATION FOR GRAPHICAL CLARITY ONLY. ALL VALVE BOXES SHALL BE INSTALLED A MINIMUM OF 6'-0" FROM EDGE OF ANY PAVED SURFACES. ALL VALVE BOXES SHALL BE PLACED A MINIMUM OF 3'-0" FROM THE CENTERLINE OF ANY DRAINAGE SWALE.

5. SLEEVING – ALL MAINLINE OR LATERAL LINES UNDER PAVED SURFACES SHALL BE SLEEVED. ALL SLEEVING UNDER PAVED SURFACES SHOWN ON PLANS IS BY CONTRACTOR UNLESS OTHERWISE NOTED. SLEEVING SHALL BE INSTALLED IN THE SIZES AND QUANTITIES SHOWN ON PLANS OR BASED ON THE SCHEDULE BELOW. WHERE SLEEVES ARE SHOWN, BUT NOT LABELED, FOLLOW THE SCHEDULE BELOW. ALL MAINLINE, CONTROL WIRES AND DRIP LINES UNDER PAVED SURFACES ARE TO BE INSTALLED IN SLEEVING.

SLEEVED PIPE SIZE/WIRE QUANTITY	REQUIRED SLEEVE SIZE & (QUANTITY)
1" - 1¼" PIPING	2" PVC (1)
1½" - 2" PIPING	4" PVC (1)
2½" - 3" PIPING	6" PVC (1)
DECODER CABLE	2" PVC (1)

NOTE: EACH LENGTH OF SLEEVED PIPE SHOWN SHALL BE ROUTED THROUGH SEPARATE SLEEVE.

6. POP-UP SPRAY NOZZLES – CONTRACTOR TO INSTALL PLASTIC NOZZLES ON ALL POP-UP SPRAY HEADS. INSTALL 15 SERIES NOZZLES ON ALL HEADS SPACED AT 13' TO 15'. INSTALL 12 SERIES NOZZLES ON ALL HEADS SPACED 11' TO 12'. INSTALL 10 SERIES NOZZLES ON ALL HEADS SPACED AT 9' TO 10'. INSTALL 8 SERIES NOZZLES ON ALL HEADS SPACED LESS THAN 8'. INSTALL SIDE STRIP NOZZLES ON ALL HEADS WITH AN "S" DESIGNATION AND RIGHT AND LEFT CORNER STRIP NOZZLES ON ALL HEADS WITH AN "L" OR "R" DESIGNATION. VARIABLE ARC NOZZLES SHOULD BE UTILIZED ADJACENT TO CURVILINEAR SHRUB BEDS OR FOR ANY ANGLES THAT ARE NOT A STANDARD NOZZLE ANGLE (MAY REQUIRE APPROVAL BY PROJECT MANAGER SPECIFIC TO SITUATION).

7. TREES SHOWN ON IRRIGATION PLANS ARE APPROXIMATE.

8. ALL IRRIGATION HEAD LOCATIONS SHALL BE STAKED, FLAGGED AND/OR OTHERWISE CLEARLY MARKED ON THE GROUND PRIOR TO INSTALLATION. SPRINKLER HEAD STAKING SHALL BE INSPECTED AND APPROVE BY THE CONSULTANT PRIOR TO INSTALLATION. STAKED LOCATIONS SHALL BE SPACED TO PROVIDE HEAD-TO-HEAD COVERAGE. CONTRACTOR IS RESPONSIBLE FOR HEAD TO HEAD COVERAGE IN IRRIGATION SYSTEM. CONTRACTOR SHALL FIELD-STAKE PROPOSED AND EXISTING ROTOR LOCATIONS WITH FLAGS OF DIFFERENT COLORS FOR REVIEW/ADJUSTMENT AND APPROVAL PRIOR TO INSTALLATION.

9. CHALK PROPOSED LATERAL PIPE ROUTING WITHIN DESIGNATED TREE MASSES AND OBTAIN APPROVAL FROM DENVER DEPARTMENT OF FORESTRY AND DISTRICT REPRESENTATIVE PRIOR TO TRENCHING AND/OR PLOWING OF PIPING AND/OR EXCAVATING FOR HEAD INSTALLATION.

10. CONTRACTOR SHALL INSTALL #10-UFUL YELLOW TRACER WIRE ALONG THE ENTIRE LENGTH OF THE PVC MAINLINE. LOOP INTO EACH VALVE BOX.

11. EXCESS DIRT GENERATED BY TRENCHING OPERATIONS SHALL BE DISPOSED OF BY CONTRACTOR AT OFF-SITE LOCATION AT NO ADDITIONAL COST TO OWNER.

12. FINAL RADIO FREQUENCY WILL BE DETERMINED BY DENVER PARKS WATER CONSERVATION SECTION. IRRIGATION CONTRACTOR TO FURNISH ALL COMPONENTS FOR THE CONTROLLER, INCLUDING TORO CONTROLLERS, RADIOS, V.I.T. ENCLOSURE AND SUBASSEMBLY (PRE-WIRED), ANTENNAS AND CABLE. IRRIGATION CONTRACTOR TO COORDINATE ALL CONTROLLER EQUIPMENT REQUIREMENTS WITH DENVER PARKS PRIOR TO ORDERING.

13. ADJUSTMENT – CONTRACTOR SHALL FINE TUNE/ADJUST THE IRRIGATION SYSTEM TO REDUCE/AVOID OVERSPRAY ONTO HARD SURFACES BY ADJUSTING NOZZLE DIRECTION AND NOZZLE RADIUS.

14. CONTRACTOR SHALL PREVENT SEDIMENT, DEBRIS AND ALL OTHER POLLUTANTS FROM ENTERING THE STORM SEWER SYSTEM DURING ALL DEMOLITION OR CONSTRUCTION OPERATIONS THAT ARE PART OF THIS PROJECT. THE CONTRACTOR AND/OR THEIR AUTHORIZED AGENTS SHALL REMOVE ALL SEDIMENT, MUD, AND CONSTRUCTION DEBRIS THAT MAY ACCUMULATE IN THE FLOWLINES AND PUBLIC RIGHTS OF WAYS OF THE CITY AND COUNTY OF DENVER AS A RESULT OF THIS CONSTRUCTION PROJECT. SEDIMENT REMOVAL SHALL BE CONDUCTED IN A TIMELY MANNER.

15. CONTRACTOR SHALL PREPARE AND SUBMIT A PLAN FOR STAGING. IT IS REQUIRED THAT ONE AREA IS COMPLETED BEFORE ANOTHER AREA IS BEGUN. STAGING EQUIPMENT IN AREAS NOT OWNED BY DENVER PARKS SHALL REQUIRE WRITTEN PERMISSION OF THE LANDOWNER AND MUST BE APPROVED BY DENVER PARKS OR ITS REPRESENTATIVE.

16. ALL PIPING WITHIN THE DRIPLINE OF EXISTING TREES SHALL BE HAND DUG. ROOTS OVER 2" IN DIAMETER SHALL NOT BE CUT. PIPING SHALL BE TUNNELED UNDER THESE ROOTS. WHEN IN DOUBT, CONTACT DENVER PARKS FORESTRY DIVISION AND DISTRICT SUPERINTENDENT AND PROJECT MANAGER FOR DECISIONS.

17. UNLABELED PIPING – ALL UNLABELED LATERAL PIPING SHALL BE 1" MINIMUM UNLESS OTHERWISE NOTED.

18. 2-WIRE SYSTEM NOTES – CONTRACTOR SHALL GROUND ALL DECODERS AND DECODER WIRE PER MANUFACTURES RECOMMENDATIONS AND STANDARDS. (MINIMUM OF EVERY 500' OF WIRE AND AT ALL ENDS OF WIRE RUN LONGER THAN 50 LF).
    - 19.1 CONTRACTOR SHALL USE ONLY MANUFACTURED 2-WIRE (PAIGE #12 UF P7350D) WIRE.
    - 19.2 ONLY USE TWO STATION DECODERS (SB-BLD2) FOR TWO VALVE CLUSTERS AND FOUR STATION DECODERS (SB-BLD4) FOR THREE VALVE CLUSTERS.
    - 19.3 LOOP 5' OF 2-WIRE INTO ALL VALVE BOXES (WITH DECODERS AND SPLICES) FOR MAINTENANCE.
    - 19.4 USE ONLY 3M DBR-6 WATER PROOF CONNECTORS ON ALL WIRE SPLICES AND ALL WIRE SPLICES ARE TO BE MADE WITHIN A VALVE BOX WITH CONTROL VALVES OR A SEPARATE 10" ROUND VALVE BOX FOR WIRE SPLICES.
    - 19.5 UTILIZE LIGHTNING ARRESTORS (BSB-BLT-SLA1), AS SHOWN ON PLAN.
    - 19.6 INSTALL SURGE PROTECTOR RODS OR PLATES 8 LF. FROM VALVES, DECODER, AND WIRE.

REFER TO SHEET

IR-1	IRRIG. SCHEDULE AND NOTES
IR-2	IRRIGATION HYDROZONE PLAN
IR-3	IRRIGATION CHARTS
IR-4	IRRIGATION PLAN
IR-5 - IR-10	IRRIGATION DETAILS

011099
HydroSystems-KDI, Inc. Irrigation Consulting
860 Tabor Street Suite 200
Lakewood, Colorado 80401
303-980-5327
(fax) 303-980-5384

wenk
ASSOCIATES
PLANNERS & LANDSCAPE ARCHITECTS
303.628.0003

DENVER
THE MILE HIGH CITY

RIVER NORTH PARK
DENVER, COLORADO

FOR AND ON BEHALF OF WENK ASSOCIATES
NOT VALID WITHOUT ORIGINAL SIGNATURE

KEY PLAN:

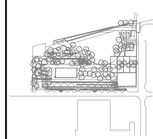

REVISIONS:
NAME DATE

DRAWN BY: KJD
REVIEWED BY: JSB
PROJECT NUMBER: 15014
DATE: **OCTOBER 2018**
ISSUE: BID SET
SHEET TITLE: IRRIGATION PLAN
SHEET NUMBER: IR-1

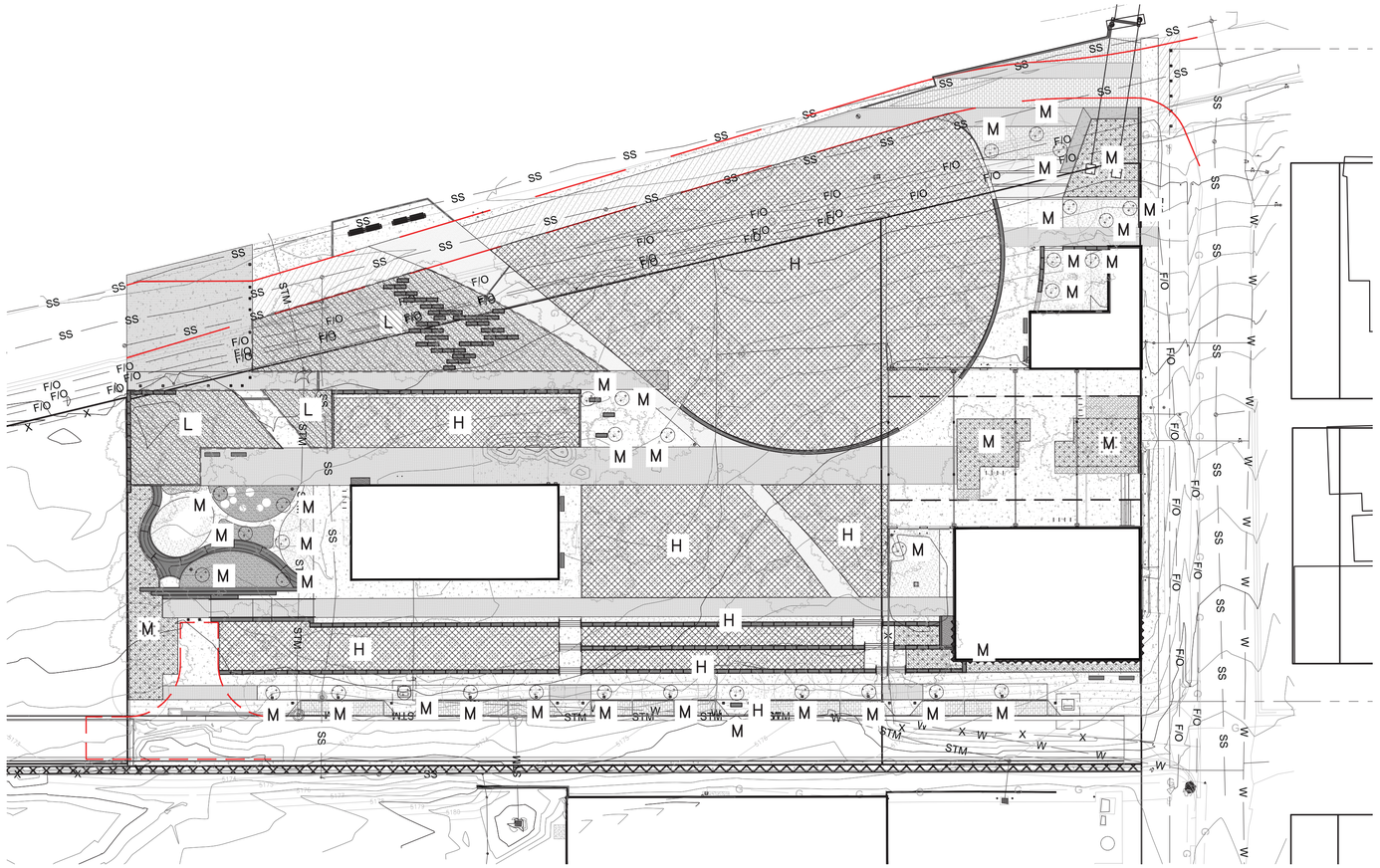

HYDROZONE PLAN

	HYDROZONE	INCHES PER YEAR	VEGETATION	ACRES
	HIGH (H)	>25" PER YEAR	TURF	1.14 AC
	MODERATE (M)	15"-25" PER YEAR	SHRUB BED	.08 AC
	LOW(L)	<10" PER YEAR	NATIVE SEED	.23 AC.
			TOTAL AC.	1.72 AC.

REFER TO SHEET

IR-1	IRRIG. SCHEDULE AND NOTES
IR-2	IRRIGATION HYDROZONE PLAN
IR-3	IRRIGATION CHARTS
IR-4	IRRIGATION PLAN
IR-5 - IR-10	IRRIGATION DETAILS

Know what's below.
Call before you dig.
CALL 3 BUSINESS DAYS IN ADVANCE BEFORE YOU DIG, GRADE, OR EXCAVATE FOR THE MARKING OF UNDERGROUND MEMBER UTILITIES.

wenk
ASSOCIATES
PLANNERS & LANDSCAPE ARCHITECTS
303.628.0003

DENVER
THE MILE HIGH CITY

RIVER NORTH PARK
DENVER, COLORADO

FOR AND ON BEHALF OF WENK ASSOCIATES
NOT VALID WITHOUT ORIGINAL SIGNATURE

KEY PLAN:

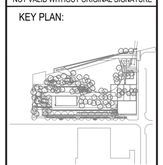

REVISIONS:

NAME	DATE

DRAWN BY:
KJD

REVIEWED BY:
JSB

PROJECT NUMBER:
15014

DATE:
OCTOBER 2018

ISSUE:
BID SET

SHEET TITLE:
HYDROZONE PLAN

SHEET NUMBER:
IR-2

HydroSystems-KDI, Inc. Irrigation Consulting
860 Tabor Street Suite 200
Lakewood, Colorado 80401
303-980-5327
(fax) 303-980-5384

WATER BUDGET

PROJECT NAME: River North Park — **SUBMITTED B** HydroSystems*KDI — **DATE:** 9-Feb-2018

DESCRIPTION	IRRIGATED ACRES	MONTH	HISTORICAL ET	PLANT COEFFICIENT	PLANT WATER REQUIREMENT	RAINFALL	EFFECTIVE RAINFALL	SYSTEM EFFICIENCY (%)	TOTAL WATER REQUIREMENTS (IN.)	WEEKLY WATER REQUIREMENTS (IN.)	MONTHLY WATER REQUIREMENTS (GAL.)
PLANT TYPE:	1.14	APRIL	2.26	0.88	1.99	0.00	0.00	65%	3.06	0.69	84,223
Bluegrass		MAY	5.73	0.88	5.04	0.00	0.00	65%	7.76	1.75	236,892
(High Usage)		JUNE	6.64	0.88	5.84	0.00	0.00	65%	8.99	2.03	276,831
		JULY	7.27	0.88	6.40	0.00	0.00	65%	9.84	2.22	303,096
		AUGUST	5.87	0.88	5.17	0.00	0.00	65%	7.95	1.79	244,726
		SEPTEMBER	4.45	0.88	3.92	0.00	0.00	65%	6.02	1.36	185,527
		OCTOBER	1.6	0.88	1.41	0.00	0.00	65%	2.17	0.49	66,706
OPERATING PERIOD-HRS./DAY	6		33.82		29.76	0.00	0.00	TOTAL	45.79	TOTAL	1,410,003
DAYS/WEEK	3									ACRE FEET/YR	4.33
DAYS/MONTH	13.29									PEAK SEASON GPM	64
DESCRIPTION	**IRRIGATED ACRES**	**MONTH**	**HISTORICAL ET**	**PLANT COEFFICIENT**	**PLANT WATER REQUIREMENT**	**RAINFALL**	**EFFECTIVE RAINFALL**	**SYSTEM EFFICIENCY (%)**	**TOTAL WATER REQUIREMENTS (IN.)**	**WEEKLY WATER REQUIREMENTS (IN.)**	**MONTHLY WATER REQUIREMENTS (GAL.)**
PLANT TYPE:	0.00	APRIL	2.26	0.8	1.81	0.00	0.00	65%	2.78	0.64	0
Fescue		MAY	5.73	0.8	4.58	0.00	0.00	65%	7.05	1.62	0
(Moderate Usage)		JUNE	6.64	0.8	5.31	0.00	0.00	65%	8.17	1.88	0
		JULY	7.27	0.8	5.82	0.00	0.00	65%	8.95	2.06	0
		AUGUST	5.87	0.8	4.70	0.00	0.00	65%	7.23	1.66	0
		SEPTEMBER	4.45	0.8	3.56	0.00	0.00	65%	5.48	1.26	0
		OCTOBER	1.6	0.8	1.28	0.00	0.00	65%	1.97	0.45	0
OPERATING PERIOD-HRS./DAY	6		33.82		27.06	0.00	0.00	TOTAL	41.62	TOTAL	0
DAYS/WEEK	3									ACRE FEET/YR	0.00
DAYS/MONTH	13									PEAK SEASON GPM	0
DESCRIPTION	**IRRIGATED ACRES**	**MONTH**	**HISTORICAL ET**	**PLANT COEFFICIENT**	**PLANT WATER REQUIREMENT**	**RAINFALL**	**EFFECTIVE RAINFALL**	**SYSTEM EFFICIENCY (%)**	**TOTAL WATER REQUIREMENTS (IN.)**	**WEEKLY WATER REQUIREMENTS (IN.)**	**MONTHLY WATER REQUIREMENTS (GAL.)**
PLANT TYPE:	0.08	APRIL	2.26	0.5	1.13	0.00	0.00	90%	1.26	0.29	2,571
Shrubs		MAY	5.73	0.5	2.87	0.00	0.00	90%	3.18	0.73	6,518
(Moderate Usage)		JUNE	6.64	0.5	3.32	0.00	0.00	90%	3.69	0.85	7,554
		JULY	7.27	0.5	3.64	0.00	0.00	90%	4.04	0.93	8,271
		AUGUST	5.87	0.5	2.94	0.00	0.00	90%	3.26	0.75	6,678
		SEPTEMBER	4.45	0.5	2.23	0.00	0.00	90%	2.47	0.57	5,063
		OCTOBER	1.6	0.5	0.80	0.00	0.00	90%	0.89	0.20	1,820
OPERATING PERIOD-HRS./DAY	6		33.82		16.91	0.00	0.00	TOTAL	18.79	TOTAL	38,477
DAYS/WEEK	3									ACRE FEET/YR	0.12
DAYS/MONTH	13									PEAK SEASON GPM	2
DESCRIPTION	**IRRIGATED ACRES**	**MONTH**	**HISTORICAL ET**	**PLANT COEFFICIENT**	**PLANT WATER REQUIREMENT**	**RAINFALL**	**EFFECTIVE RAINFALL**	**SYSTEM EFFICIENCY (%)**	**TOTAL WATER REQUIREMENTS (IN.)**	**WEEKLY WATER REQUIREMENTS (IN.)**	**MONTHLY WATER REQUIREMENTS (GAL.)**
PLANT TYPE:	0.23	APRIL	2.26	0.3	0.68	0.00	0.00	65%	1.04	0.24	8,562
Native Plant Material		MAY	5.73	0.3	1.72	0.00	0.00	65%	2.64	0.61	16,838
(Low Usage)		JUNE	6.64	0.3	1.99	0.00	0.00	65%	3.06	0.70	19,283
		JULY	7.27	0.3	2.18	0.00	0.00	65%	3.36	0.77	21,109
		AUGUST	5.87	0.3	1.76	0.00	0.00	65%	2.71	0.62	17,044
		SEPTEMBER	4.45	0.3	1.34	0.00	0.00	65%	2.05	0.47	12,921
		OCTOBER	1.6	0.3	0.48	0.00	0.00	65%	0.74	0.17	4,646
OPERATING PERIOD-HRS./DAY	6		33.82		10.15	0.00	0.00	TOTAL	15.61	TOTAL	98,300
DAYS/WEEK	3									ACRE FEET/YR	0.30
DAYS/MONTH	13									PEAK SEASON GPM	5

MINIMUM REQUIRED SYSTEM EFFICIENCIES:
Drip irrigation - 90%
Rotor irrigation - 70%
Spray head irrigation: 65%
April & October ET = 1/2 Monthly Value
ET data from Denver Water weather stations (Average 2003-2008)

PROJECT TOTALS

IRRIGATED ACRES	1.45
GALLONS/YEAR	1,546,680
ACRE FEET/YEAR	4.75
PEAK SEASON GPM	70

WATER USE CHART

C1

Project Name: ***River North Park***
Project Location: ***Denver***

Irrigation System Hydraulic Worksheet
Prepared by HydroSystems-KDI, Inc.

Date: ***19-Oct-17***
Static Water Pressure: ***75.00*** ***From:*** ***Nick***
of: ***Denver Water***

Hydraulic Grade: ***At Zone A11***

Equipment or Material	Quantity (one if not specified)	Nominal Size	Equipment or Pipe Material	Friction Loss Through Pipe per Chart (psi)		Velocity through pipes (ft/sec)	Flow Rate (gpm)	Loss/Gain (psi)
Corp Stop:		2"	Typical Corp. Stop				65	0.40
Svc Line (tap to meter):	50 LF	2"	K Copper	4.18	/100 FT	6.91	65	2.09
Curb Stop:		2"	Typical Curb Stop				65	0.20
Water Meter:		2"	Typical Meter				65	3.20
Svc Line (meter to backflow):	20 LF	2"	K Copper	4.18	/100 FT	6.91	65	0.84
Backflow:		2"	Febco 825				65	12.50
Stop & Waste:		2"	Typical Stop & Waste Valve				65	0.30
Master Valve:		2"	Rainbird EFB				65	2.40
Flow Sensor:		2"	cst Flow Sensor				65	2.00
Gate Valve:	3	2 1/2"	Typical Bronze Gate Valve				65	0.09
Gate Valve:	2	2 1/2"	Typical Bronze Gate Valve				65	0.06
Gate Valve:	0	2"	Typical Bronze Gate Valve				65	0.00
Pressure Required at Head:			Rotor					35.00
Lateral Allowance:								3.00
Control Valve allowance:		2"	Rainbird PEB				65	4.50
Mainline allowances:								
	20 LF	2 1/2"	CL 200 PVC	0.93	/100 FT	3.92	65	0.19
	670 LF LOOPED	2 1/2"	CL 200 PVC	0.28	/100 FT	2.05	65	1.88
	0 LF	2"	CL 200 PVC	2.34	/100 FT	5.74	65	0.00
Mainline Fitting allowance:			10% of Mainline allowances					0.21
Elevation:								
Tap Elev.	5181		Control Valve Elev.	5184				1.30
Factor of Safety:			5% System Losses					3.51

Total System requirements (PSI)	***73.65***
Available pressure (PSI)	***75.00***
Difference (PSI)	***1.35***

FRICTION LOSS CHART

C2

Project River North Park
Location Denver

Controlle A - Point of Connection # 1 (2")
21-Sep-18

Target Watering Window = 6 nights per week - 3 hours per night (18 hours/week)
Estimated weekly application = 2.22" - Bluegrass (High Usage)
Estimated weekly application = 2.06" - Fescue (Moderate Usage)
Estimated weekly application = 0.93" - Shrubs (Moderate Usage)
Estimated weekly application = 0.77" - Native Plant Material (Low Usage) - Establishment Irrigation Only
Prepared by HydroSystems-KDI, Inc.

Zone No.	Plant Type		Zone Description			Precip. Rate in/hr	Zone Flow GPM	Peak Demand In/wk	Zone run time minutes	Water usage gal/wk	Operating Pressure psi
A1	Turf		Rotor	120-PC	#3	0.92	46	2.22	48	6,660	35.00
A2	Tree		Tree Ring			1.00	4	0.93	19	223	30.00
A3	Turf		Popup Spray	10	ft	1.75	37	2.22	25	2,816	30.00
A4	Turf		Popup Spray	10	ft	1.75	36	2.22	25	2,740	30.00
A5	Turf		Rotor	120-PC	#4	0.63	47	2.22	70	9,937	35.00
A6	Turf		Popup Spray	12	ft	2.01	16	2.22	22	1,060	30.00
A7	Turf		Rotor	120-PC	#2	0.63	13	2.22	70	2,749	40.00
A8	Shrubs		Netafim			1.00	3	0.93	19	167	30.00
A9	Shrubs		Hipop Spray	12	ft	2.01	11	0.93	9	305	30.00
A10	Shrubs		Hipop Spray	15	ft	2.01	48	0.93	9	1,333	30.00
A11	Shrubs		Hipop Spray	15	ft	2.01	26	0.93	9	722	30.00
A12	Tree		Tree Ring			1.00	4	0.93	19	223	30.00
A13	Turf		Rotor	120-PC	#8	0.89	63	2.22	50	9,429	35.00
A14	Turf		Rotor	120-FC	#8	0.44	50	2.22	101	15,136	35.00
A15	Turf		Rotor	120-FC	#8	0.44	50	2.22	101	15,136	35.00
A16	Turf		Rotor	120-PC	#8	0.89	58	2.22	50	8,680	35.00
A17	Turf		Rotor	120-PC	#4	0.92	34	2.22	48	4,923	35.00
A18	Shrubs		Hi Pop Rot	120-PC	#4	0.63	38	0.93	30	3,366	30.00
A19	Shrubs		Hipop Spray	12	ft	2.01	35	0.93	9	970	30.00
A20	Shrubs		Hi Pop Rot	120-PC	#4	0.63	20	0.93	30	1,771	30.00
A21	Tree		Tree Ring			1.00	4	0.93	19	223	30.00
A22	Shrubs		Hipop Spray	12	ft	2.01	41	0.93	9	1,136	30.00
A23											
A24											
A25											

Total projected peak season water use per week (gallons)		89,707
Total peak season hours per week - Controller A*	39.58	

CONTROLLER CHART

C3

REFER TO SHEET

IR-1	IRRIG. SCHEDULE AND NOTES
IR-2	IRRIGATION HYDROZONE PLAN
IR-3	IRRIGATION CHARTS
IR-4	IRRIGATION PLAN
IR-5 - IR-10	IRRIGATION DETAILS

811 Know what's below. Call before you dig.
CALL 3 BUSINESS DAYS IN ADVANCE BEFORE YOU DIG, GRADE, OR EXCAVATE FOR THE MARKING OF UNDERGROUND MEMBER UTILITIES.

wenk ASSOCIATES
PLANNERS & LANDSCAPE ARCHITECTS
303.628.0003

DENVER
THE MILE HIGH CITY

RIVER NORTH PARK
DENVER, COLORADO

FOR AND ON BEHALF OF WENK ASSOCIATES
NOT VALID WITHOUT ORIGINAL SIGNATURE

KEY PLAN:

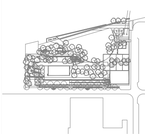

REVISIONS:
NAME DATE

DRAWN BY:
KJD

REVIEWED BY:
JSB

PROJECT NUMBER:
15014

DATE:
OCTOBER 2018

ISSUE:
BID SET

SHEET TITLE:
IRRIGATION CHARTS

SHEET NUMBER:
IR-3

011099
HydroSystems-KDI, Inc. Irrigation Consulting
860 Tabor Street Suite 200
Lakewood, Colorado 80401
303-980-5327
(fax) 303-980-5384

A CONTROLLER LOCATION "A"

PEDESTAL MOUNT ONE 204 STATION TORO 2-WIRE CONTROLLER, REMOTE READY, AT INDICATED LOCATION. 120 VOLT POWER IS AVAILABLE WITHIN 40 LF. OF CONTROLLER LOCATION FROM BUILDING (RE: ELECTRICAL). ELECTRICAL METER, WIRE/CONDUIT, STEP-DOWN TRANSFORMER (IF REQUIRED) AND POWER CONNECTION TO CONTROLLER IS BY CONTRACTOR WITH WORK CONFORMING TO LOCAL CODES. EXTEND PAIGE P7171-D ARMORED SIGNAL CABLE FROM THE HYDROMETER AND 4 UFUL WIRES (ONE #12 UFUL GREEN COMMON, ONE #14 UFUL BLUE, ONE #12 UFUL GREEN EXTRA COMMON AND ONE #14 UFUL BLUE EXTRA HOT) FROM HYDROMETER TO CONTROLLER "A". CONNECT WIRES TO THE APPROPRIATE SENSOR INPUT PORTS. FEES AND PERMITS ASSOCIATED WITH WORK ARE TO BE OBTAINED AND PAID BY CONTRACTOR. FINAL CONTROLLER LOCATION SHALL BE APPROVED BY OWNER'S REPRESENTATIVE OR CONSULTANT PRIOR TO INSTALLATION. MOUNT ONE HUNTER RAIN CLIK DEVICE ON BUILDING EAVE WHERE THERE IS 20 FT. OF CLEARANCE FROM ANY OVERHANG OR OBSTRUCTING FEATURE. INSTALL RAIN SENSOR RECEIVER IN CONTROLLER ENCLOSURE. FINAL RAIN SENSOR LOCATION SHALL BE APPROVED BY OWNER'S REPRESENTATIVE OR PROJECT PM PRIOR TO INSTALLATION.

1 POINT OF CONNECTION #1 - 2"

PEAK FLOW REQUIREMENT: 70 GPM. REQUIRED STATIC PRESSURE: 75 PSI MIN.
METER ADDRESS: TBD
METER ACCOUNT #: TBD
TAP ELEVATION: TBD

TIE ONTO EXISTING 2" COPPER STUB-OUT DOWNSTREAM OF WATER METER AT 54" DEPTH IN THIS APPROXIMATE LOCATION. EXTEND 2" TYPE K SOFT COPPER AT 54" MINIMUM DEPTH TO BACKFLOW PREVENTER LOCATION (RE: CIVIL PLANS) AND EXTEND 2" K SOFT COPPER AT 54" DEPTH TO BACKFLOW PREVENTER LOCATION. INSTALL ONE 2" WATER METER PER DENVER WATER STANDARDS, ONE 2" STOP & WASTE VALVE, ONE 2" REDUCED PRESSURE FEBCO 825YA BACKFLOW PREVENTER WITH PROTECTIVE ENCLOSURE, ONE 2" NETAFIM HYDROMETER, ONE 1" MANUAL DRAIN VALVE, ONE QUICK COUPLING VALVE AND EXTEND PVC MAINLINE AS SHOWN. EXTEND 4 UFUL WIRES (ONE #12 UFUL GREEN COMMON, ONE #14 UFUL BLUE, ONE #12 UFUL GREEN EXTRA COMMON AND ONE #14 UFUL BLUE EXTRA HOT) FROM MASTER VALVE TO CONTROLLER "A" AND CONNECT TO THE DATA RETRIEVAL BOARD. EXTEND ONE PAIGE P7171-D ARMORED SIGNAL CABLE WIRE FROM FLOW SENSOR TO DATA RETRIEVAL BOARD IN CONTROLLER "A". ONE QUICK COUPLING VALVE AND EXTEND CLASS 200 PVC MAINLINE AS SHOWN. WORK SHALL CONFORM TO LOCAL CODE. FEES AND PERMITS ASSOCIATED WITH WORK ARE TO BE OBTAINED AND PAID BY CONTRACTOR. FINAL LOCATION OF BACKFLOW PREVENTER SHALL BE REVIEWED AND APPROVED BY PROJECT PM PRIOR TO START OF WORK.

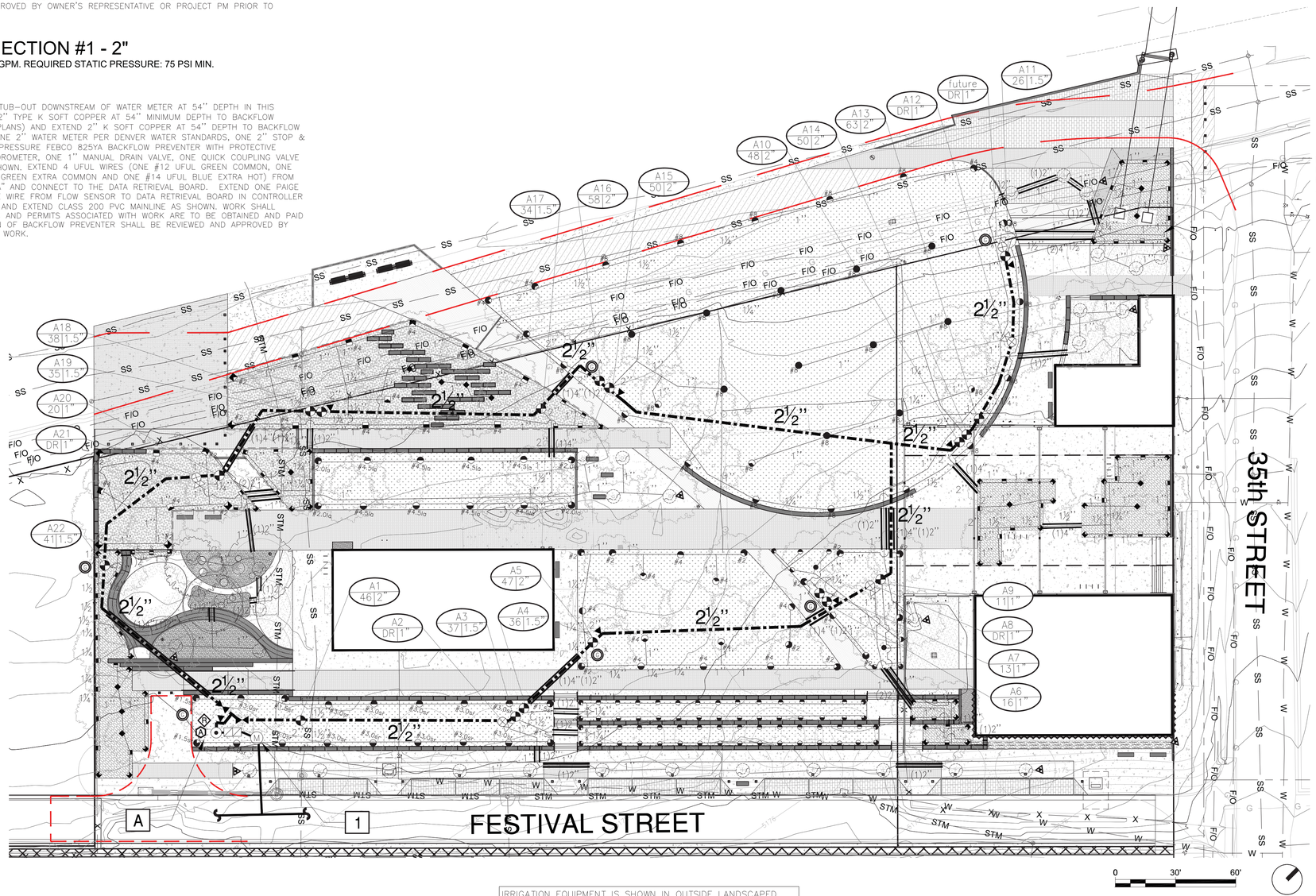

INSTALL 1" PVC TO THIS LOCATION FOR POSSIBLE FUTURE TREE ZONE ALONG 35TH STREET.

IRRIGATION EQUIPMENT IS SHOWN IN OUTSIDE LANDSCAPED AREA FOR GRAPHICAL CLARITY ONLY. INSTALL ALL IRRIGATION EQUIPMENT WITHIN LANDSCAPED AREAS.

REFER TO SHEET

IR-1	IRRIG. SCHEDULE AND NOTES
IR-2	IRRIGATION HYDROZONE PLAN
IR-3	IRRIGATION CHARTS
IR-4	IRRIGATION PLAN
IR-5 - IR-10	IRRIGATION DETAILS

811 Know what's below. Call before you dig.
CALL 3 BUSINESS DAYS IN ADVANCE BEFORE YOU DIG, GRADE, OR EXCAVATE FOR THE MARKING OF UNDERGROUND MEMBER UTILITIES.

wenk
ASSOCIATES
PLANNERS & LANDSCAPE ARCHITECTS
303.628.0003

DENVER THE MILE HIGH CITY

RIVER NORTH PARK
DENVER, COLORADO

FOR AND ON BEHALF OF WENK ASSOCIATES
NOT VALID WITHOUT ORIGINAL SIGNATURE

KEY PLAN:

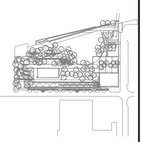

REVISIONS:

MARK	DATE

DRAWN BY: KJD
REVIEWED BY: JSB
PROJECT NUMBER: 15014
DATE: **OCTOBER 2018**
ISSUE: BID SET
SHEET TITLE: IRRIGATION PLAN
SHEET NUMBER: IR-4

011099
HydroSystems-KDI, Inc. Irrigation Consulting
860 Tabor Street Suite 200
Lakewood, Colorado 80401
303-980-5327
(fax) 303-980-5384

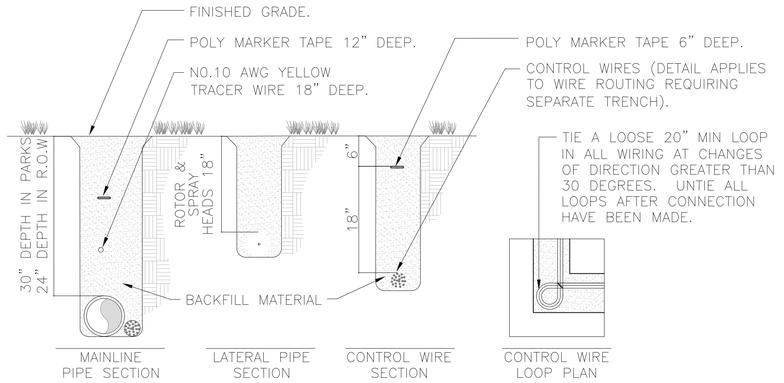

NOTE:
1. TRENCH DEPTHS ARE SHOWN AS MINIMUMS, MAXIMUM DEPTH VARIATION ALLOWABLE IS 2". SEE SPECIFICATIONS FOR MINIMUM TRENCH WIDTHS.
2. MULTIPLE IRRIGATION PIPES SHALL NOT BE INSTALLED IN THE SAME TRENCH.
3. IRRIGATION WIRE SHALL BE PLACED BESIDE IRRIGATION PIPE, NEVER STACKED.
4. BUNDLE AND TAPE ALL WIRES AT 10'–0" MINIMUM SECTIONS.
5. BACKFILL MATERIAL SHALL BE FREE OF RUBBISH, FROZEN MATERIALS AND STONES LARGER THAN 1". SEE SPECIFICATIONS FOR TYPICAL BACKFILL MATERIAL, PROCEDURES AND REGULATIONS.

TRENCH

Rev. 07/15/10

1

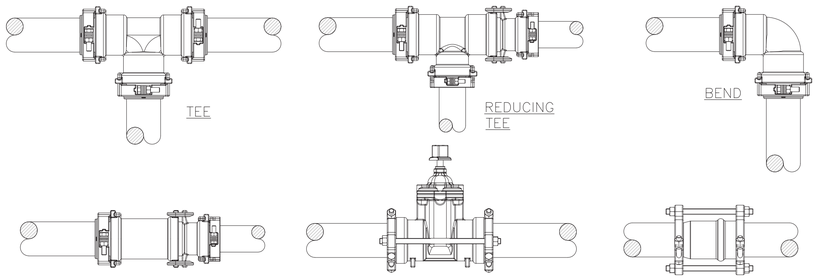

PIPE SIZE	BENDS 11°	22°	45°	90°	REDUCERS 1STEP	2STEP	3STEP	DEAD END BLIND	SERV.B.
2"	1'	1'	2'	6'	–	–	–	19'	6'
2.5"	1'	2'	4'	9'	4'	–	–	23'	10'
3"	2'	3'	6'	11'	8'	10'	–	30'	15'
4"	2'	4'	9'	20'	14'	20'	31'	45'	25'
6"	3'	6'	13'	29'	30'	40'	53'	63'	40'
8"	4'	8'	15	38'	33'	55'	63'	75'	70'
10"	5'	9'	19'	45'	36'	56'	75'	96'	90'
12"	5'	10'	21'	53'	38'	60'	83'	112'	110'

NOTES:
1. THE RESTRAINT SCHEMES HERE ARE FOR SYSTEM PRESSURES UP TO 125 PSI. FOR HIGHER PRESSURES, CALL THE LEEMCO FACTORY.
2. EACH FITTING AND VALVE BELL MUST BE RESTRAINED TO THE LENGTH OF PIPE NOTED IN THE TABLE USING FITTING TO PIPE RESTRAINT, VALVE TO PIPE RESTRAINT, AND PIPE TO PIPE RESTRAINT AS REQUIRED.
3. PIPE JOINTS WITHIN THE RESTRAINED LENGTH REQUIREMENT MUST BE RESTRAINED WITH PIPE TO PIPE RESTRAINTS.
4. SERVICE TEES AND COUPLINGS WITHIN THE RESTRAINED LENGTH REQUIREMENT MUST BE RESTRAINED WITH FITTING TO PIPE RESTRAINTS.
5. CONTACT TONY GARNER @ (208) 631–7787, THE LEEMCO REPRESENTATIVE, FOR ALL QUESTIONS CONCERNING LEEMCO PRODUCTS. COORDINATE AN INSTALLATION CLINIC WITH TONY GARNER PRIOR TO INSTALLING THE MAINLINE.

LEEMCO FITTINGS/JOINT RESTRAINTS – 2" + MAIN

Rev. 08/21/17

3

REFER TO SHEET

IR-1	IRRIG. SCHEDULE AND NOTES
IR-2	IRRIGATION HYDROZONE PLAN
IR-3	IRRIGATION CHARTS
IR-4	IRRIGATION PLAN
IR-5 - IR-10	IRRIGATION DETAILS

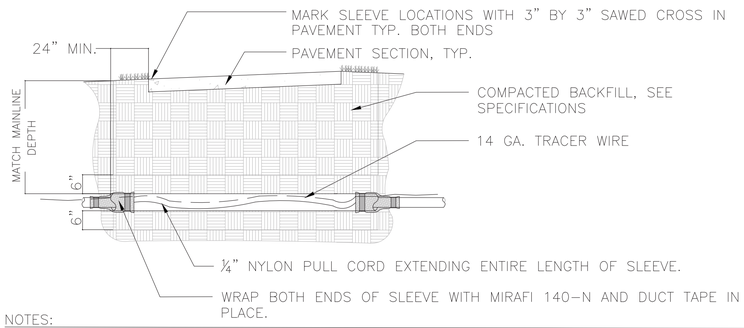

NOTES:
1. SLEEVING SHALL BE CL–200 P.V.C. UNLESS OTHERWISE NOTED ON PLAN.
2. ALL MAINLINE AND LATERAL SLEEVES SHALL BE A MINIMUM OF 2 PIPE SIZES LARGER THAN THE PIPE BEING SLEEVED.
3. DENVER WATER REQUIRES TRACER WIRE IN ALL SLEEVES THAT CROSS STREETS. IF SLEEVE IS FOR MAINLINE AND A TRACER WIRE IS ALREADY INCLUDED, NO ADDITIONAL TRACER WIRE IS NEEDED.
4. SLEEVES SHALL BE INSTALLED AT SAME DEPTH AS MAINLINE OR LATERALS.
5. SLEEVES TO BE INSTALLED 24" DEPTH MINIMUM UNDER ROADWAYS AND 30" DEPTH MINIMUM UNDER TREE CRITICAL ROOT ZONES.

SLEEVING

Rev. 07/15/10

2

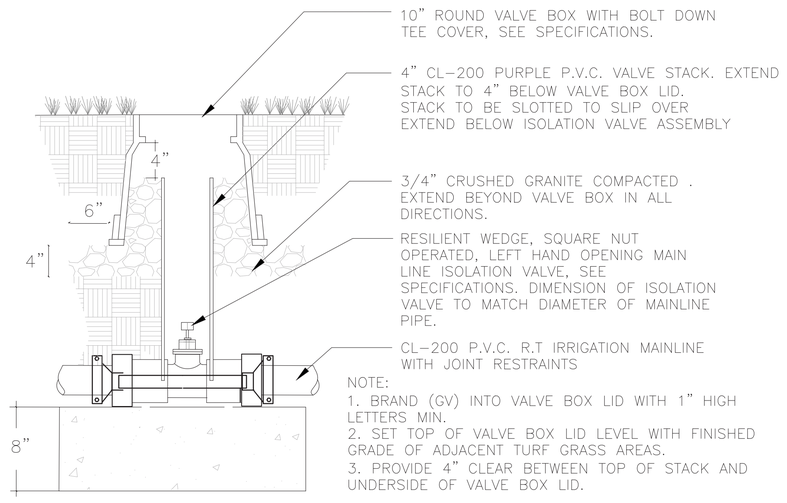

NOTE:
1. BRAND (GV) INTO VALVE BOX LID WITH 1" HIGH LETTERS MIN.
2. SET TOP OF VALVE BOX LID LEVEL WITH FINISHED GRADE OF ADJACENT TURF GRASS AREAS.
3. PROVIDE 4" CLEAR BETWEEN TOP OF STACK AND UNDERSIDE OF VALVE BOX LID.

GATE VALVE 2.5" + LARGER

Rev. 07/15/10

12

HydroSystems-KDI, Inc. Irrigation Consulting
860 Tabor Street Suite 200
Lakewood, Colorado 80401
303-980-5327
(fax) 303-980-5384

811 Know what's below. Call before you dig.
CALL 3 BUSINESS DAYS IN ADVANCE BEFORE YOU DIG, GRADE, OR EXCAVATE FOR THE MARKING OF UNDERGROUND MEMBER UTILITIES.

wenk ASSOCIATES
PLANNERS & LANDSCAPE ARCHITECTS
303.628.0003

DENVER THE MILE HIGH CITY

RIVER NORTH PARK
DENVER, COLORADO

FOR AND ON BEHALF OF WENK ASSOCIATES
NOT VALID WITHOUT ORIGINAL SIGNATURE

KEY PLAN:

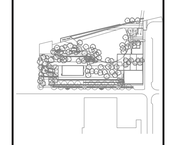

REVISIONS:
NAME DATE

DRAWN BY: KJD
REVIEWED BY: JSB
PROJECT NUMBER: 15014
DATE: **OCTOBER 2018**
ISSUE: BID SET
SHEET TITLE: IRRIGATION DETAILS
SHEET NUMBER: **IR-5**

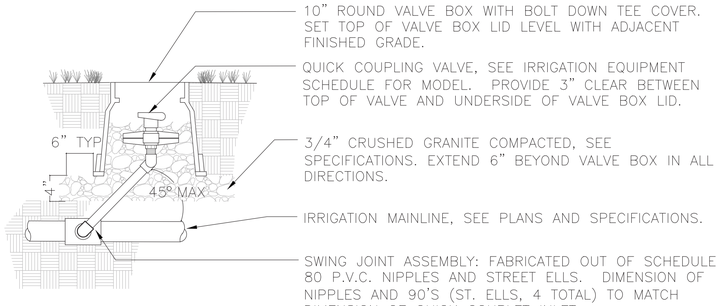

NOTE:
1. INSURE THAT HANDLE ON QUICK COUPLER KEY WILL CLEAR VALVE BOX IN ALL DIRECTIONS.
2. BRAND (QC) INTO VALVE BOX LID WITH 1" HIGH LETTERS MIN.
3. NIPPLE ANGLE TO BE 10 DEGREES MIN. AND 45 DEGREES MAX. INSTALL SWING JOINT SUCH THAT DOWNWARD PRESSURE ON VALVE WILL TIGHTEN FITTING INTO MAINLINE TEE.
4. FOR QUICK COUPLERS LOCATED WITHIN 100 FEET OF BACKFLOW PREVENTION DEVICES AND INTENDED FOR WINTERIZATION USE, ALL FITTINGS AND NIPPLES OF THE SWING JOINT ASSEMBLY MUST BE CONSTRUCTED ENTIRELY OF BRASS.

QUICK COUPLER

Rev. 07/15/10

5

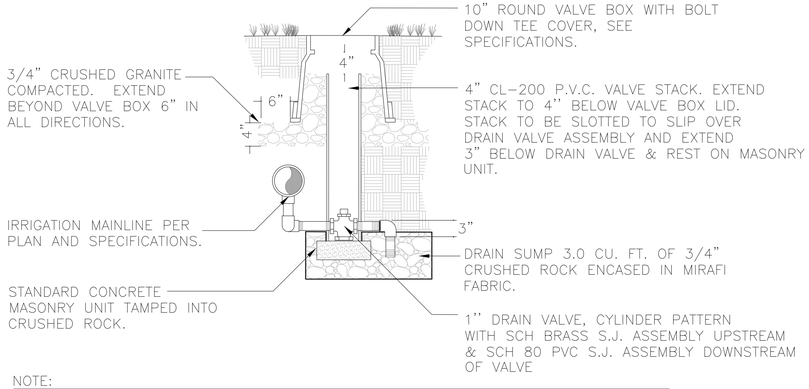

NOTE:
1. BRAND (DV) INTO VALVE BOX LID WITH 1" HIGH LETTERS MIN.
2. EXTEND VERTICAL DISCHARGE NIPPLE INTO DRAIN SUMP A MINIMUM OF 3".
3. SET TOP OF VALVE BOX LID LEVEL WITH FINISHED GRADE OF ADJACENT TURFGRASS AREAS.

DRAIN VALVE

Rev. 07/15/10

6

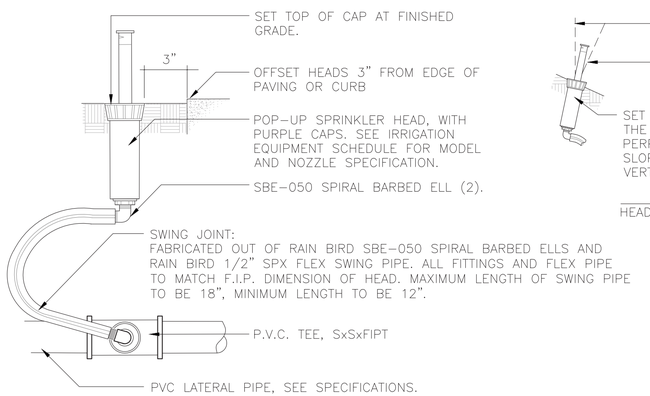

NOTE:
1. PLUMB HEAD PERPENDICULAR TO FINISHED GRADE OR AS SPECIFIED FOR HEADS ON A SLOPE.
2. SET TOP OF HEAD LEVEL WITH FINISHED GRADE IN TURF GRASS AREAS. SET TOP OF HEAD 1/2" ABOVE FINISHED GRADE IN SEEDED AREAS.
3. LATERAL PIPE TO BE PLACED 9" MIN FROM EDGE OF CURB/WALKS AND 36" MIN FROM THE CENTERLINE OF SWALES.

POP-UP SPRAY

Rev. 07/15/10

7

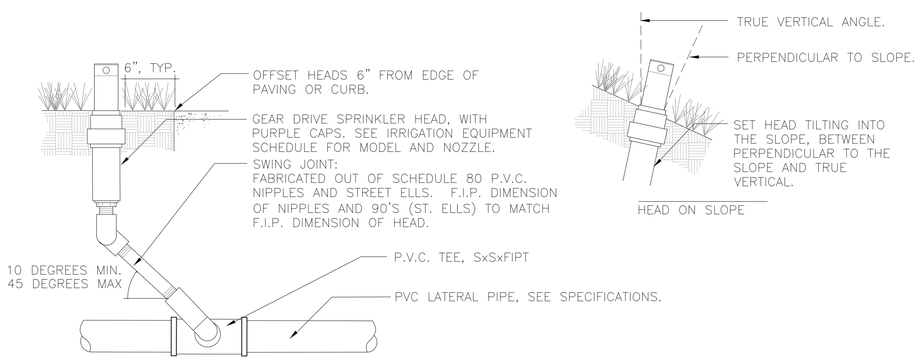

NOTE:
1. PLUMB HEAD PERPENDICULAR TO FINISHED GRADE OR AS SPECIFIED FOR HEADS ON SLOPE.
2. SET CAP OF HEAD LEVEL WITH FINISHED GRADE TURFGRASS AREAS. SET TOP OF HEAD 1/2" ABOVE FINISHED GRADE IN SEEDED AREAS.

GEAR DRIVEN ROTOR

Rev. 07/15/10

8

REFER TO SHEET

IR-1	IRRIG. SCHEDULE AND NOTES
IR-2	IRRIGATION HYDROZONE PLAN
IR-3	IRRIGATION CHARTS
IR-4	IRRIGATION PLAN
IR-5 - IR-10	IRRIGATION DETAILS

Know what's below. Call before you dig.
CALL 3 BUSINESS DAYS IN ADVANCE BEFORE YOU DIG, GRADE, OR EXCAVATE FOR THE MARKING OF UNDERGROUND MEMBER UTILITIES.

wenk
ASSOCIATES
PLANNERS & LANDSCAPE ARCHITECTS
303.628.0003

DENVER
THE MILE HIGH CITY

RIVER NORTH PARK
DENVER, COLORADO

FOR AND ON BEHALF OF WENK ASSOCIATES
NOT VALID WITHOUT ORIGINAL SIGNATURE

KEY PLAN:

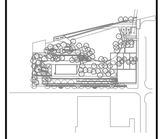

REVISIONS:
NAME DATE

DRAWN BY:
KJD

REVIEWED BY:
JSB

PROJECT NUMBER:
15014

DATE:
OCTOBER 2018

ISSUE:
BID SET

SHEET TITLE:
IRRIGATION DETAILS

SHEET NUMBER:
IR-6

011099
HydroSystems-KDI, Inc. Irrigation Consulting
860 Tabor Street Suite 200
Lakewood, Colorado 80401
303-980-5327
(fax) 303-980-5384

NOTE:

* CONCRETE PAD PENETRATIONS TO BE 1" LARGER THAN TUBING DIAMETER
* REFER TO ENCLOSURE DETAIL FOR CONCRETE PAD DIMENSIONS
* DIAMETER OF FITTINGS AND TUBING SHALL EQUAL DIAMETER BACKFLOW PREVENTER UNLESS NOTED OTHERWISE

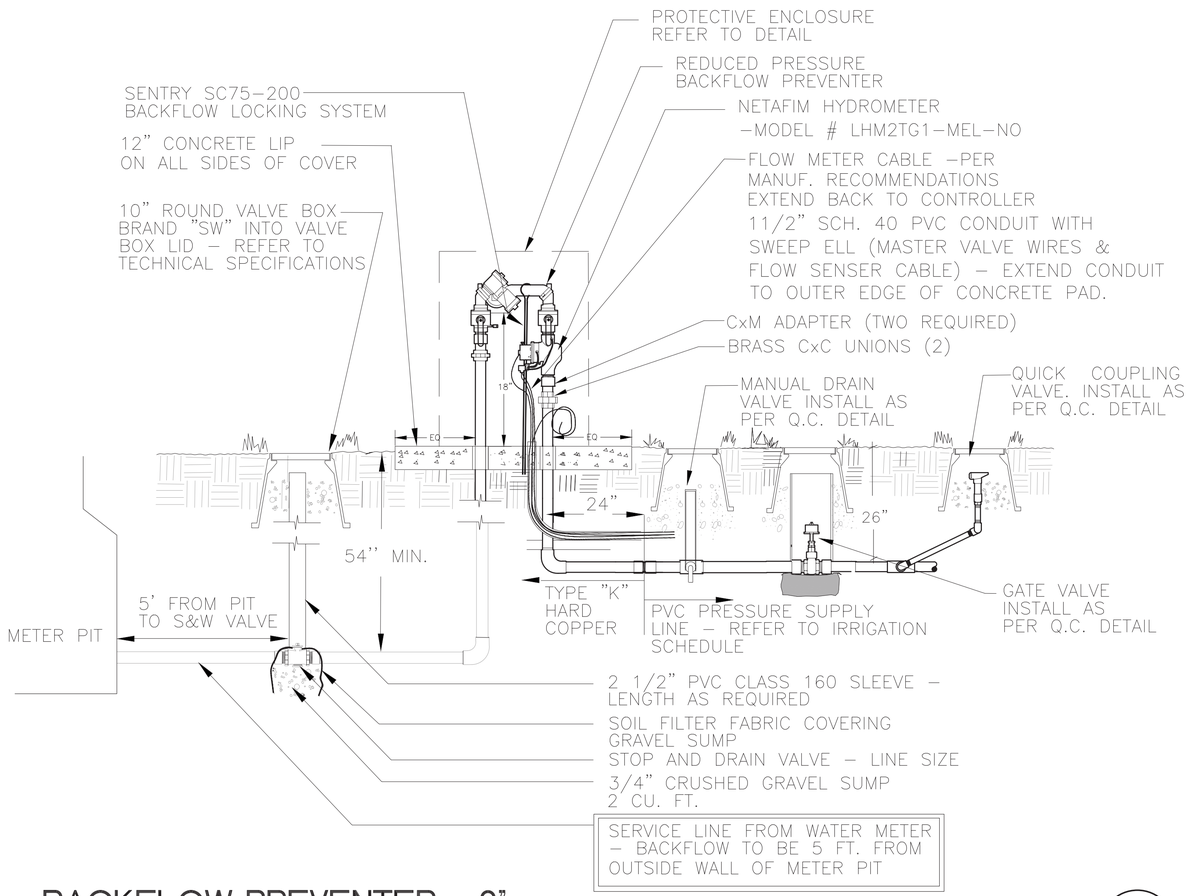

BACKFLOW PREVENTER - 2"

Rev. 09/21/18

9

BFP MODEL/SIZE	ENCLOSURE MODEL	W	H	L
FEBCO 825YA - 1.5" & 2"	GS-M1	16"	37"	18"

NOTE: CONTRACTOR TO USE LOCKSHIELD BRACKETS BY BPDI

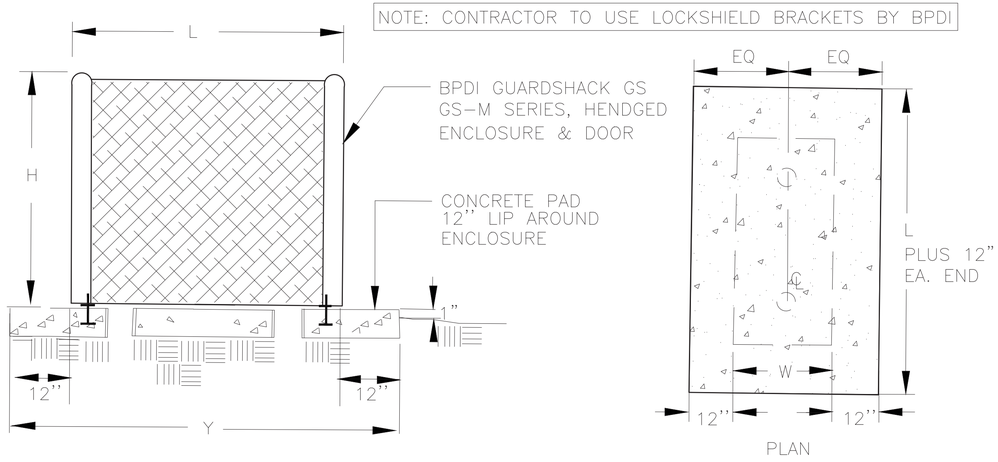

NOTE:

* INSTALL ENCLOSURE ANCHORS AS PER MANUFACTURER'S RECOMMENDATIONS.
* PROVIDE OWNER WITH KEYED PADLOCK FOR ENCLOSURE
* PROVIDE ENCLOSURE WITH STANDARD DARK GREEN POWDER COATED FINISH
* PAD PENETRATIONS FOR BACKFLOW PREVENTER RISERS TO BE 1" LARGER THAN RISER DIAMETER.
* TOP SURFACE OF CONCRETE PAD SHALL BE 1" ABOVE FINISH GRADE
* PER DENVER WATER REQUIREMENTS, INSTALL ON THE BFP ENCLOSURE, IN A PERMANENT MANNER, THE ADDRESS FOR THE METER IN TEXT THAT IS 2" TALL. COORDINATE GETTING THE METER ADDRESS WITH THE PROJECT MANAGER.

BACKFLOW ENCLOSURE

Rev. 09/21/18

10

REFER TO SHEET

IR-1	IRRIG. SCHEDULE AND NOTES
IR-2	IRRIGATION HYDROZONE PLAN
IR-3	IRRIGATION CHARTS
IR-4	IRRIGATION PLAN
IR-5 - IR-10	IRRIGATION DETAILS

Know what's below. Call before you dig.
CALL 3 BUSINESS DAYS IN ADVANCE BEFORE YOU DIG, GRADE, OR EXCAVATE FOR THE MARKING OF UNDERGROUND MEMBER UTILITIES.

wenk
ASSOCIATES
PLANNERS & LANDSCAPE ARCHITECTS
303.628.0003

DENVER
THE MILE HIGH CITY

RIVER NORTH PARK
DENVER, COLORADO

FOR AND ON BEHALF OF WENK ASSOCIATES
NOT VALID WITHOUT ORIGINAL SIGNATURE

KEY PLAN:

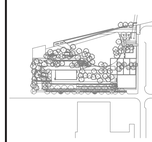

REVISIONS:

NAME	DATE

DRAWN BY: KJD

REVIEWED BY: JSB

PROJECT NUMBER: 15014

DATE: **OCTOBER 2018**

ISSUE: BID SET

SHEET TITLE: IRRIGATION DETAILS

SHEET NUMBER: IR-7

011099
HydroSystems-KDI, Inc. Irrigation Consulting
860 Tabor Street Suite 200
Lakewood, Colorado 80401
303-980-5327
(fax) 303-980-5384

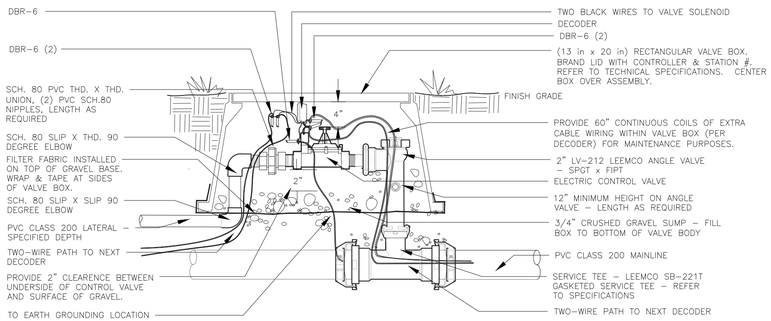

NOTE: DIAMETERS OF PVC FITTINGS AND NIPPLES AFTER 2" LEEMCO ANGLE VALVE SHALL EQUAL ELECTRIC CONTROL VALVE DIAMETER. VALVE BOXES SHALL BE INSTALLED PARALLEL OR PERPENDICULAR TO ADJACENT SIDEWALKS AND HARD SURFACES WHERE APPLICABLE. APPLY TEFLON TAPE TO ALL MALE THREADED FITTINGS AND THREADED NIPPLES.

SINGLE ELECTRIC CONTROL VALVE
TWO WIRE SYSTEM

11

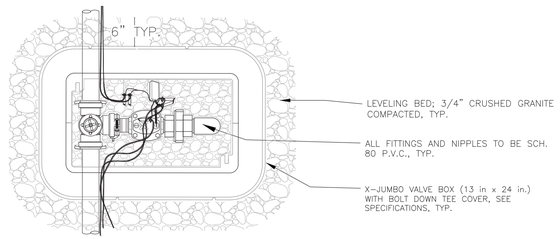

SINGLE VALVE MANIFOLD (TYP.)

NOTE:
1. ONE CONTROL VALVE PER BOX.
2. CENTER CONTROL VALVE ASSEMBLY IN BOX. ENSURE THAT LATERAL PIPE HAS 3" OF COVER MINIMUM WHERE IT PASSES UNDER VALVE BOX FRAME.
3. DO NOT MODIFY OR CUT SIDE WALLS OF VALVE BOX.
4. ASSEMBLE CONTROL VALVE ASSEMBLY FOR REVIEW AND APPROVAL PRIOR TO FABRICATION AND INSTALLATION.
5. LOCATE VALVE BOXES AND MAINLINE A MINIMUM DISTANCE OF 24" FROM CURBS AND WALKS AND A MINIMUM OF 36" FROM CENTER LINE OF DRAINAGE SWALES.

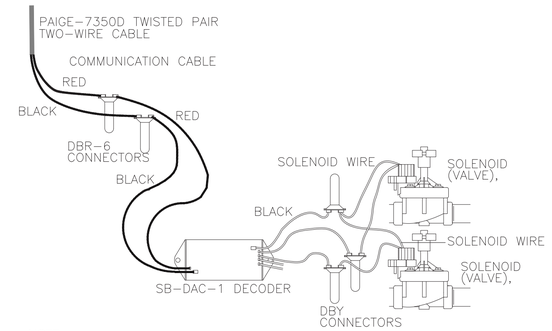

NOTE:
MAXIMUM LENGTH OF SECONDARY WIRE PATH (14 AWG) FROM DECODER TO SOLENOID IS 50 FEET.

DECODER WIRING DIAGRAM

Revised 05/21/10

12

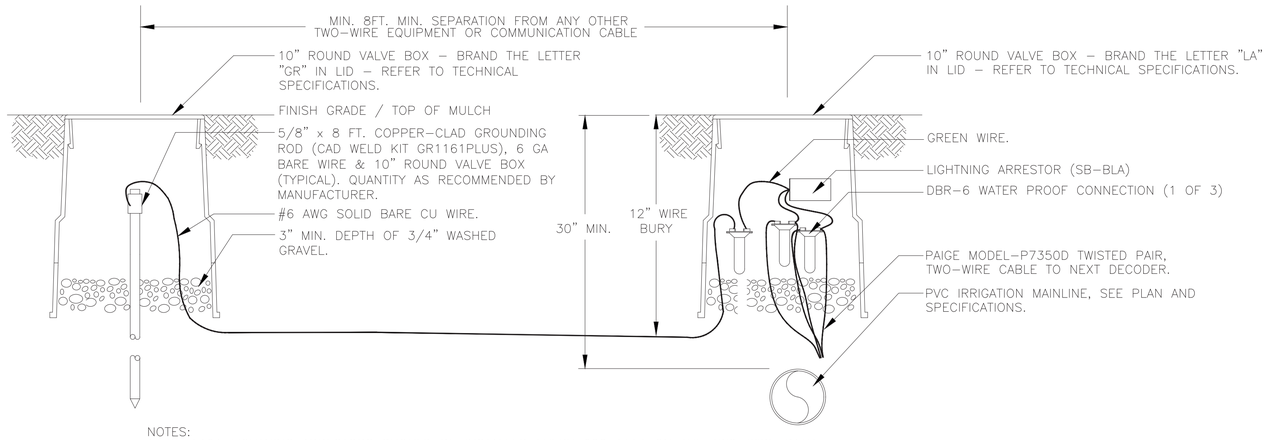

NOTES:
1. BL-LA01 LIGHTNING ARRESTORS SHOULD BE INSTALLED EVERY 600-FEET ON THE TWO-WIRE PATH.
2. BL-LA01 LIGHTNING ARRESTORS TO BE INSTALLED AT END OF WIRE RUN THAT TERMINATES IN THE FIELD (STAR CONFIGURATION).

TWO-WIRE GROUNDING DIAGRAM

Revised 05/21/10

13

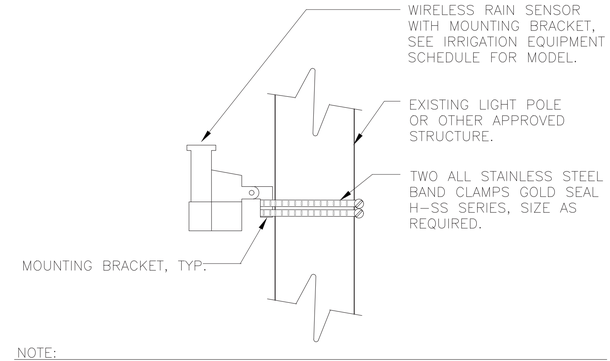

NOTE:
1. MOUNT TO POLE OR LIGHT POLE WITHIN 200 FEET OF CONTROLLER.
2. INSTALL A MINIMUM OF 15' ABOVE GRADE.
3. ENSURE SENSOR IS NOT SHIELDED BY TREE CANOPIES OR STRUCTURES AND NOT AFFECTED BY IRRIGATION OVERSPRAY.

RAIN SENSOR

14

REFER TO SHEET

IR-1	IRRIG. SCHEDULE AND NOTES
IR-2	IRRIGATION HYDROZONE PLAN
IR-3	IRRIGATION CHARTS
IR-4	IRRIGATION PLAN
IR-5 - IR-10	IRRIGATION DETAILS

811 Know what's below. Call before you dig.
CALL 3 BUSINESS DAYS IN ADVANCE BEFORE YOU DIG, GRADE, OR EXCAVATE FOR THE MARKING OF UNDERGROUND MEMBER UTILITIES.

wenk
ASSOCIATES
PLANNERS & LANDSCAPE ARCHITECTS
303.628.0003

DENVER
THE MILE HIGH CITY

RIVER NORTH PARK
DENVER, COLORADO

FOR AND ON BEHALF OF WENK ASSOCIATES
NOT VALID WITHOUT ORIGINAL SIGNATURE

KEY PLAN:

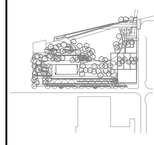

REVISIONS:
NAME DATE

DRAWN BY: KJD
REVIEWED BY: JSB
PROJECT NUMBER: 15014
DATE: **OCTOBER 2018**
ISSUE: BID SET
SHEET TITLE: IRRIGATION DETAILS
SHEET NUMBER: **IR-8**

HydroSystems-KDI, Inc. Irrigation Consulting
860 Tabor Street Suite 200
Lakewood, Colorado 80401
303-980-5327
(fax) 303-980-5384

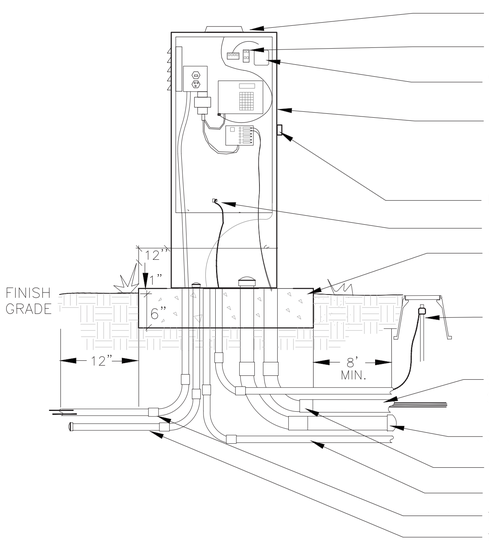

LOW PROFILE ANTENNA W/ CABLE – ONE PER CONTROLLER UNIT

TERMINALS FOR MASTER VALVE, FLOW SENSOR, RAIN SENSOR

WIRELESS RAIN SENSOR MODULE, SEE SPECIFICATIONS

FIELD CONTROLLER & CUSTOM BUILT ENCLOSURE – DARK GREEN POWDER COATED FINSIH COLOR TIGER DRYLACK 6005– SEE PLAN SHEETS FOR MODEL NUMBER OF ENCLOSURE AND CONTROLLER–INSTALL LEVEL & PLUMB. MOUNT PEDESTAL TO CONCRETE BASE VIA 1/2" DIA. THREADED "J" BOLTS WITH 1/2" FENDER WASHERS & NUTS.

HEAVY DUTY LOCKING HASP WITH KEYED PADLOCK, COORDINATE KEY # W/ PARKS DEPARTMENT

GROUND WIRE CRIMPED TO GROUNDING LUG

CONCRETE PAD – 6'' THICK (SEE CONCRETE SPECIFICATIONS) AND EXTENDING 12'' IN ALL DIRECTIONS AROUND THE CONTROLLER ENCLOSURE. INSTALL SLAB 1" ABOVE ADJACENT FINISHED GRADE. SEE PLAN VIEW DETAIL.

5/8" x 8 FT. COPPER–CLAD GROUNDING ROD (CAD WELD KIT GR1161PLUS), 6 GA BARE WIRE & 10" ROUND VALVE BOX (TYPICAL). QUANTITY AS RECOMMENDED BY MANUFACTURER.

SWEEP ELL – CONTROL WIRING (3" DIA – 1–80 CONTROL WIRES, 4" – 81–144 CONTROL WIRES) CONDUITS SHALL BE INSTALLED IN SEPARATE TRENCHES (ONE PER CONTROLLER UNIT)

3" SPARE SWEEP ELL (CAP SLEEVE PIPE) (1)

1" SWEEP ELL – GROUND WIRE (1)

1" SWEEP ELL – MASTER VALVE AND FLOW SENSOR WIRES (1)

1" SWEEP ELL – 120v ELECTRICAL SERVICE (1)

1" SPARE SWEEP ELL – (CAP SLEEVE PIPE) (1)

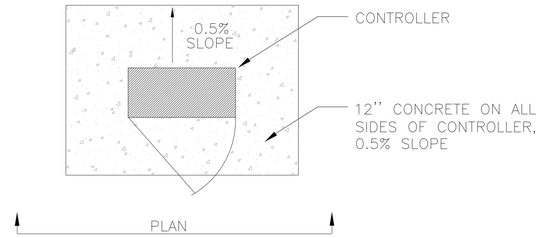

GENERAL NOTES AND REQUIRMENTS

1. 450 MHz RADIO COMMUNICATION SYSTEM SHALL BE FULLY COMPATIBLE WITH EXISTING DENVER DEPARTMENT OF PARKS AND RECREATION CENTRAL CONTROL UNIT RADIO FREQUENCY.
2. FLOW SENSOR SHIELDED CABLE (PAIGE 7171D–A) SHALL BE CONNECTED TO FLOW SENSOR TERMINAL AT TOP OF CONTROLLER.
3. MASTER VALVE WIRE SHALL BE CONNECTED TO THE MASTER VALVE TERMINAL AT THE TOP OF THE CONTROLLER.
4. ALL WIRE CONDUITS SHALL BE SCH. 40 PVC CONDUIT AND SHALL EXTEND A MINIMUM OF 12" BEYOND THE CONCRETE SLAB AND CUT FLUSH WITH CONCRETE PAD.
5. CONTRACTOR SHALL PROVIDE 48'' LENGTH OF SPARE WIRES WITHIN ENCLOSURE. NEATLY COIL WIRES AT BASE OF ENCLOSURE. BUNDLE AND LABEL WIRES ACCORDING TO CONTROLLER DESIGNATION SHOWN ON PLANS.
6. LOCATE CONTROLLER ENCLOSURE SO THAT IRRIGATION HEADS DO NOT SPRAY INTO CABINET.
7. CONTRACTOR SHALL ARRANGE AND PAY FOR A SITE SURVEY FOR ANTENNA SET–UP FOR MAXIMUM SIGNAL QUALITY FOR EACH CONTROLLER SITE AND OPTIMIZATION OF CENTRAL CONTROL COMMUNICATION AFTER INSTALLATION. SURVEY TO BE CONDUCTED PRIOR TO CONSTRUCTION AND ORDERING OF EQUIPMENT AND IN SUMMER TIME DURING FULL TREE LEAF OUT.

ELECTRICAL AND GROUNDING NOTES:

1. CONTRACTOR TO GROUND AND PROVIDE SURGE PROTECTION FOR FIELD UNIT IN ACCORDANCE WITH MANUFACTURER'S RECOMMENDATIONS AND GROUND ROD(S) SHOWN. 6 GA. (MIN) BARE COPPER GROUND WIRE SHALL BE CONNECTED AND CRIMPED TO STUDS ON THE BACKSIDE OF THE PANEL.
2. CONTROLLER(S) SHALL BE EARTH GROUND TESTED VIA MEGGER WITH ACCEPTABLE GROUND RESISTANCE OF 10 OHMS OR LESS. CONTRACTOR SHALL PERFORM GROUNDING TEST IN PRESENCE OF DENVER PARKS & RECREATION REPRESENTATIVE OR CONSULTANT.
3. EARTH GROUND MUST BE IN ACCORDANCE WITH ARTICLE 250 OF THE NATIONAL ELECTRICAL CODE (NEC).
4. ALL ELECTRICAL WORK TO CONFORM TO LOCAL AND STATE CODES.

CONTOLLER - SINGLE DOOR

Rev. 5/2/13

15

REFER TO SHEET

IR-1	IRRIG. SCHEDULE AND NOTES
IR-2	IRRIGATION HYDROZONE PLAN
IR-3	IRRIGATION CHARTS
IR-4	IRRIGATION PLAN
IR-5 - IR-10	IRRIGATION DETAILS

Know what's below. Call before you dig.
CALL 3 BUSINESS DAYS IN ADVANCE BEFORE YOU DIG, GRADE, OR EXCAVATE FOR THE MARKING OF UNDERGROUND MEMBER UTILITIES.

wenk
ASSOCIATES
PLANNERS & LANDSCAPE ARCHITECTS
303.628.0003

DENVER
THE MILE HIGH CITY

HydroSystems-KDI, Inc. Irrigation Consulting
860 Tabor Street Suite 200
Lakewood, Colorado 80401
303-980-5327
(fax) 303-980-5384

RIVER NORTH PARK
DENVER, COLORADO

FOR AND ON BEHALF OF WENK ASSOCIATES
NOT VALID WITHOUT ORIGINAL SIGNATURE

KEY PLAN:

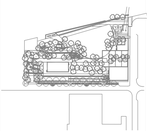

REVISIONS:
NAME DATE

DRAWN BY:
KJD

REVIEWED BY:
JSB

PROJECT NUMBER:
15014

DATE:
OCTOBER 2018

ISSUE:
BID SET

SHEET TITLE:
IRRIGATION DETAILS

SHEET NUMBER:
IR-9

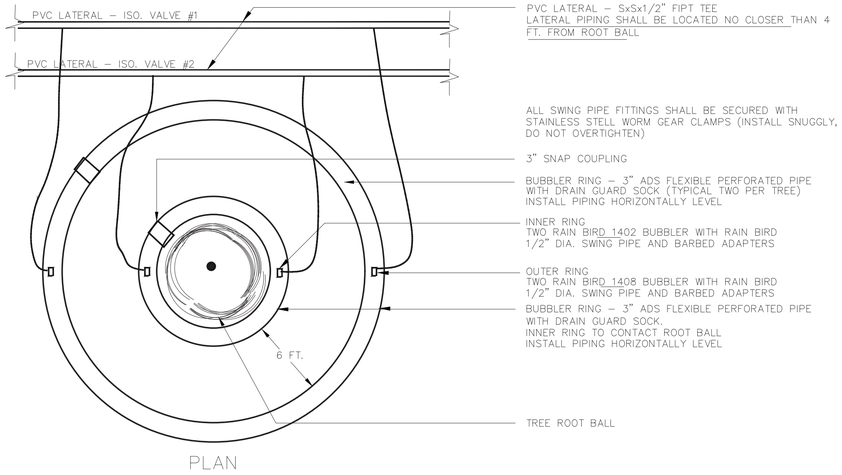

PLAN

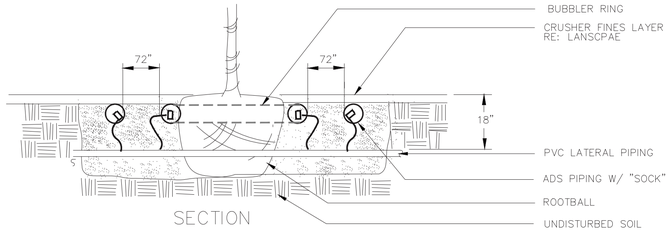

SECTION

NOTE:

ALL PERFORATED PIPE SHALL BE INSTALLED LEVEL

SECURE ALL ADS COUPLINGS AND BUBBLERS WITH FABRIC–REINFORCED ADHESIVE TAPE

OPERATION RECOMMENDATIONS: IRRIGATE NEW TREE WITH INNER RING DURING FIRST TWO GROWING SEASONS. ACTIVATE OUTER RINGS (IN ADDITION TO INNER RINGS) FOR GROWING SEASON NO. 3 AND BEYOND

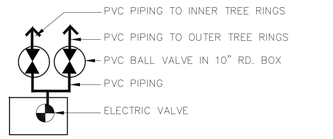

INSTALL ONE CHRISTY'S VALVE MARKER TAG ON EA. BALL VALVE. MARK INNER RING VALVWE AS "INNER" AND OUTER RING AS "OUTER". USE INDELIBLE INK

BUBBLER VALVE CONFIGURATION

TREE BUBBLER RINGS

16

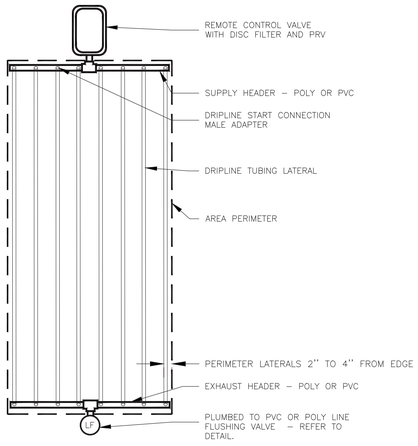

SUBSURFACE DRIP - TOP VIEW

END FEED LAYOUT - TYPICAL

17

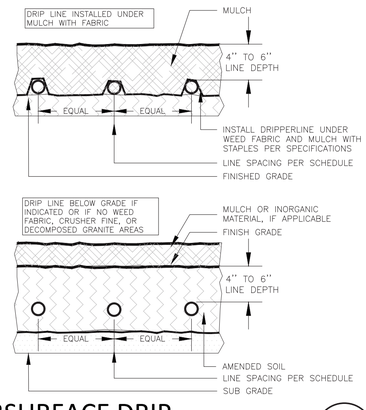

SUBSURFACE DRIP

HORIZONTAL VIEW - Bed

18

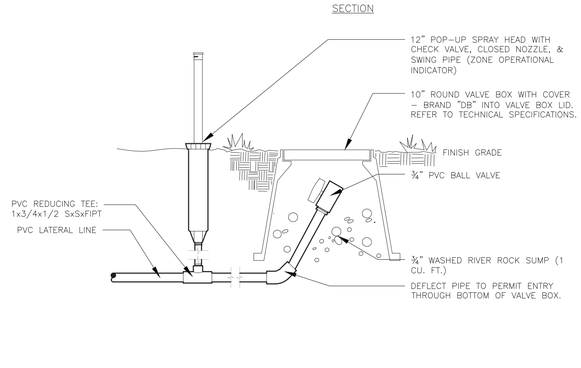

DRIP INDICATOR AND FLUSH VALVE

19

REFER TO SHEET

IR-1	IRRIG. SCHEDULE AND NOTES
IR-2	IRRIGATION HYDROZONE PLAN
IR-3	IRRIGATION CHARTS
IR-4	IRRIGATION PLAN
IR-5 - IR-10	IRRIGATION DETAILS

HydroSystems-KDI, Inc. Irrigation Consulting
860 Tabor Street Suite 200
Lakewood, Colorado 80401
303-980-5327
(fax) 303-980-5384

811 Know what's below. Call before you dig.
CALL 3 BUSINESS DAYS IN ADVANCE BEFORE YOU DIG, GRADE, OR EXCAVATE FOR THE MARKING OF UNDERGROUND MEMBER UTILITIES.

wenk
ASSOCIATES
PLANNERS & LANDSCAPE ARCHITECTS
303.628.0003

DENVER
THE MILE HIGH CITY

RIVER NORTH PARK
DENVER, COLORADO

FOR AND ON BEHALF OF WENK ASSOCIATES
NOT VALID WITHOUT ORIGINAL SIGNATURE

KEY PLAN:

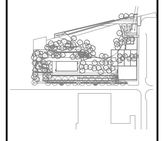

REVISIONS:

NAME	DATE

DRAWN BY: KJD

REVIEWED BY: JSB

PROJECT NUMBER: 15014

DATE: **OCTOBER 2018**

ISSUE: BID SET

SHEET TITLE: IRRIGATION DETAILS

SHEET NUMBER: IR-10

ELECTRICAL SHEET INDEX

SHEET NUMBER	SHEET NAME
LE0.0	COVER SHEET
LE1.1	SITE ELECTRICAL PLAN
LE2.1	SITE LIGHTING PLAN
LE4.0	ELECTRICAL ONE-LINE DIAGRAMS
LE5.0	ELECTRICAL DETAILS
LE6.0	ELECTRICAL SCHEDULES

POWER LEGEND

SYMBOL	DESCRIPTION
	DISTRIBUTION EQUIPMENT; SWITCHGEAR, PANELBOARDS
	BRANCH CIRCUIT PANEL
T	TRANSFORMER
	FUSED DISCONNECT SWITCH NON-FUSED WHEN FUSING NOT REQUIRED)
	COMBINATION STARTER/DISCONNECT SW.
	MAGNETIC STARTER OR CONTACTOR
M	METER
	MOTOR OUTLET AND CONNECTION
	OVERHEAD SERVICE ENTRANCE
IR	IRRIGATION CONTROLLER
	INDICATES KITCHEN EQUIPMENT, RISER, OR ROOM NUMBER
WM PM	SURFACE RACEWAY
	POWER POLE
SPD	SURGE PROTECTION DEVICE
VFD	VARIABLE FREQUENCY DRIVE
	GROUNDING BUS BAR
	GROUND ROD
	GROUNDING TEST WELL
	PULL BOX
	SINGLE RECEPTACLE
	DUPLEX RECEPTACLE
	DOUBLE DUPLEX RECEPTACLE
	SWITCHED RECEPTACLE; HALF
	SWITCHED RECEPTACLE; FULL
	50A RECEPTACLE
	JUNCTION BOX
	FURNITURE WHIP POWER CONNECTION
GFI	FACELESS GFI

LINE TYPE LEGEND

SYMBOL	DESCRIPTION
	ITEMS SHOWN HEAVY AND SOLID ARE NEW.
	ITEMS SHOWN LIGHT AND DENOTED (E) ARE EXISTING TO REMAIN.
	ITEMS SHOWN DASHED ARE EXISTING TO BE REMOVED UNLESS OTHERWISE NOTED.
(RL) (RL)	ITEMS SHOWN DASHED AND DENOTED (RL) ARE EXISTING TO BE RELOCATED.
(RL) (RL)	ITEMS SHOWN DARK AND/OR DENOTED (RL) ARE RELOCATED DEVICES FROM DEMOLITION UNLESS OTHERWISE NOTED.

CIRCUITRY LEGEND

SYMBOL	DESCRIPTION
	UPPER-CASE LETTER(S) ADJACENT TO LUMINAIRE INDICATES LUMINAIRE TYPE LOWER-CASE LETTER(S) ADJACENT TO LUMINAIRE INDICATES SWITCHING LEG (IF APPLICABLE) NUMBER ADJACENT TO LUMINAIRE INDICATES CIRCUITRY INFORMATION
	NUMBER ADJACENT TO DEVICE INDICATES CIRCUITRY INFORMATION
	CIRCUIT RUN; UNDERGROUND OR IN FLOOR
	CIRCUIT RUN
	CIRCUIT RISERS; UP, DOWN
	HOME RUN; ARROWS INDICATE NUMBER OF CIRCUITS
LP-XX	PANEL AND DEVICE CIRCUIT NUMBER

SITE LIGHTING LEGEND

SYMBOL	DESCRIPTION
	LUMINAIRE IN GROUND AIMED
	LUMINAIRE IN GROUND
	WALL PACK
	SHOE BOX LUMINAIRE
	HOCKEY PUCK LUMINAIRE
	FLOOD LIGHT
	POST TOP LUMINAIRE
	BOLLARD

ONE-LINE LEGEND

SYMBOL	DESCRIPTION
	FUSED DISCONNECT SW., DIAGRAMMATIC
60A/3P 60AFRN	INDICATES 60A, 3POLE DISCONNECT WITH 60A FRN TYPE FUSES
GFI	GFI FUSED DISCONNECT SWITCH
	CIRCUIT BREAKER, DIAGRAMMATIC
	CIRCUIT BREAKER WITH KIRK KEY INTERLOCK
GFI	CIRCUIT BREAKER WITH GROUND FAULT INTERRUPTER PROTECTION
1000AF 800AT	INDICATES 1000A FRAME BREAKER WITH 800A TRIP UNIT
GFCI	CIRCUIT BREAKER WITH SHUNT TRIP
T KVA	TRANSFORMER
	FUSED DISCONNECT SWITCH (NON-FUSED WHEN FUSING NOT REQUIRED)
	COMBINATION STARTER/DISCONNECT SW.
	MAGNETIC STARTER OR CONTACTOR
M	METER
M	METER WITH INTEGRAL CT CABINET
M	MOTOR OUTLET AND CONNECTION
	ELECTRICAL GROUND
	PANEL BOARD OR LOAD CENTER
	CURRENT TRANSFORMER (CT)
N	AUTOMATIC TRANSFER SWITCH (ATS)
E/G	ENGINE GENERATOR
	FEEDER NUMBER
SPD	SURGE PROTECTIVE DEVICE

ABBREVIATIONS LEGEND

SYMBOL	DESCRIPTION
D	INDICATES DETAIL OR DESIGN NOTE
A	AMPERES
AC	ABOVE COUNTER
AFCI	ARC FAULT CURRENT INTERRUPTER
AFF	ABOVE FINISHED FLOOR
AFG	ABOVE FINISHED GRADE
AIC	AMPERE INTERRUPTING CURRENT
ATS	AUTOMATIC TRANSFER SWITCH
AL	ALUMINUM
AWG	AMERICAN WIRE GAGE
BC	BELOW COUNTER
CB	CIRCUIT BREAKER
C	CONDUIT
CU	COPPER
E	EXISTING
EC	ELECTRICAL CONTRACTOR
EM	EMERGENCY
EMC	ELECTRICAL METALLIC CONDUIT
EPO	EMERGENCY POWER OFF
ETR	EMERGENCY TRANSFER RELAY
EWC	ELECTRIC WATER COOLER
FAAP	FIRE ALARM ANNUNCIATOR PANEL
FACP	FIRE ALARM CONTROL PANEL
GC	GENERAL CONTRACTOR
GFI	GROUND-FAULT CIRCUIT-INTERRUPTER
GND	GROUND
GRC	GALVANIZED RIGID CONDUIT
HOA	HAND-OFF-AUTO
HP	HORSEPOWER
HZ	HERTZ
IDF	INTERMEDIATE DISTRIBUTION FRAME
IMC	INTERMEDIATE METALLIC CONDUIT
Isc	SHORT CIRCUIT CURRENT
Kcmil	1000 CIRCULAR MILS
KV	KILOVOLTS
KVA	KILOVOLT AMPERES
KW	KILOWATTS
KWH	KILOWATT HOURS
IG	ISOLATED GROUND
mA	MILLIAMPS
MAX	MAXIMUM
MIC	MICROPHONE
MIN	MINIMUM
MCB	MAIN CIRCUIT BREAKER
MCC	MOTOR CONTROL CENTER
MDC	MAIN DISTRIBUTION CENTER
MDF	MAIN DISTRIBUTION FRAME
MLO	MAIN LUGS ONLY
N	NEW
NEC	NATIONAL ELECTRIC CODE
NFPA	NATIONAL FIRE PROTECTION ASSOCIATION
NIC	NOT IN CONTRACT
NL	NIGHT LIGHT
NC	NORMALLY CLOSED
NO	NORMALLY OPEN
NTS	NOT TO SCALE
OC	ON CENTER
PF	POWER FACTOR
RL	RELOCATE
RMS	ROOT MEAN SQUARE
SPD	SURGE PROTECTIVE DEVICE
ST	SHUNT TRIP
SWBD	SWITCHBOARD
SWGR	SWITCHGEAR
TP	TAMPER PROOF
TYP	TYPICAL
TVSS	TRANSIENT VOLTAGE SURGE SUPRESSOR
UC	UNDER CABINET
UL	UNDERWRITERS LABORATORY
UNO	UNLESS OTHERWISE NOTED
UPS	UNINTERRUPTIBLE POWER SUPPLY
VFD	VARIABLE FREQUENCY DRIVE
V	VOLT
WAP	WIRELESS ACCESS POINT
WP	WEATHER PROTECTED
W/	WITH
W/O	WITHOUT
XFMR	TRANSFORMER

BCER
ENGINEERING | TECHNOLOGY | LIFE SAFETY
5420 Ward Rd
Arvada, CO 80002
303.422.7400
www.BCER.com
SSG Project Number: 150250.00

wenk
ASSOCIATES
PLANNERS & LANDSCAPE ARCHITECTS
303.628.0003

DENVER
THE MILE HIGH CITY

RIVER NORTH PARK

DENVER, COLORADO

COLORADO LICENSED
CHRISTOPHER C. SCHMIDT
33012
11/01/18
PROFESSIONAL ENGINEER

FOR AND ON BEHALF OF WENK ASSOCIATES
NOT VALID WITHOUT ORIGINAL SIGNATURE

KEY PLAN:

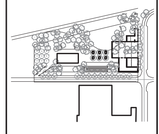

REVISIONS:

NAME	DATE

DRAWN BY:
ART

REVIEWED BY:
SCS

PROJECT NUMBER:
15014

DATE:
OCTOBER 2018

ISSUE:
BID SET

SHEET TITLE:
COVER SHEET

SHEET NUMBER:
LE0.0

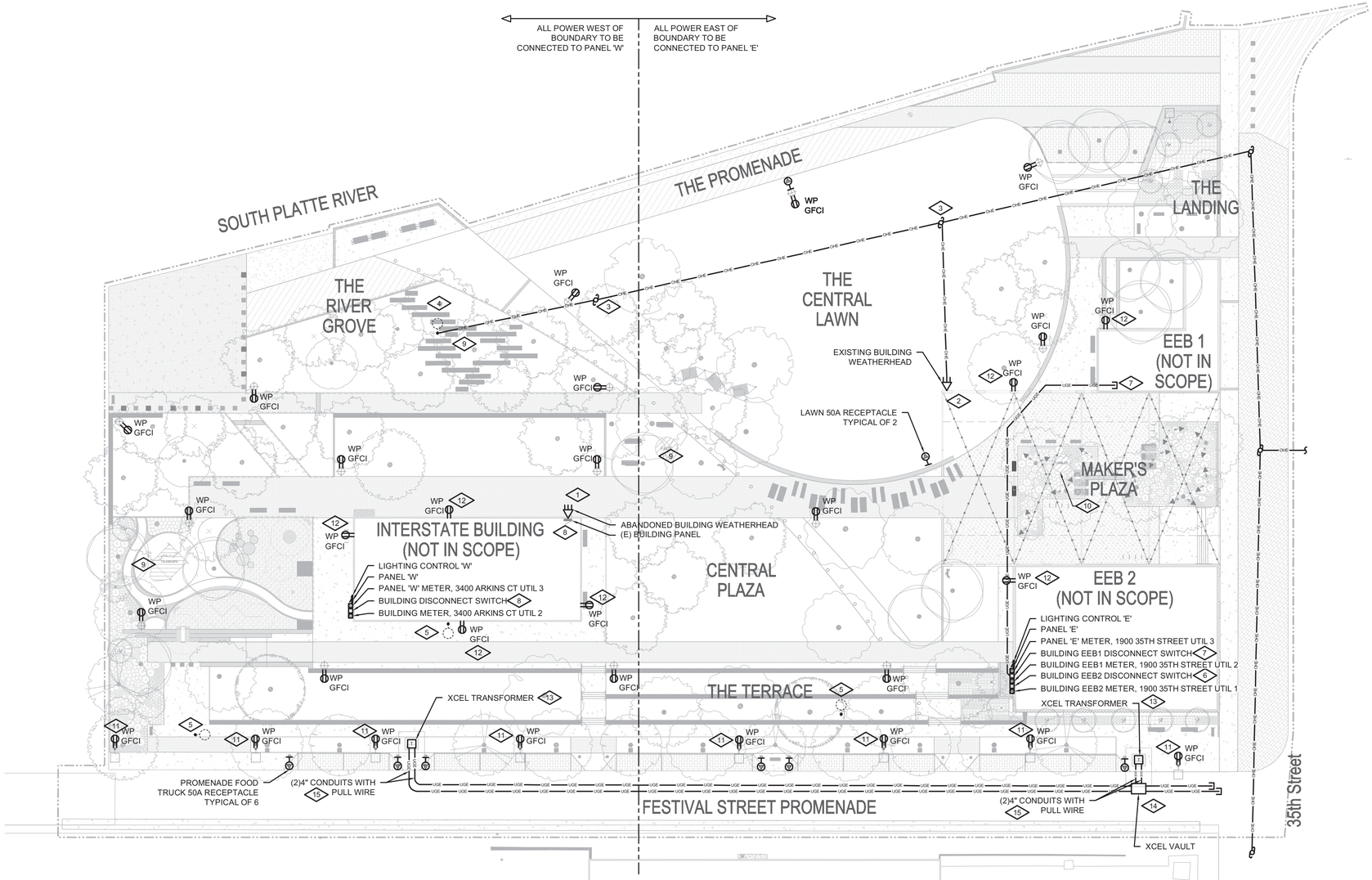

1 SITE ELECTRICAL PLAN
SCALE: 1" = 30' - 0"

GENERAL NOTES

1. REFERENCE DRAWING LE4.0 PANEL SCHEDULE 'W' AND PANEL SCHEDULE 'E' FOR CONNECTION OF POWER AND LIGHTING CIRCUITS.
2. ALL 20A POWER CIRCUITS TO BE FED WITH (2#6+1#10G)1"C. INSTALL PULL BOX EVERY 200' MINIMUM.
3. ALL 50A POWER CIRCUITS TO BE FED WITH (2#4+1#10G)1-1/4"C. INSTALL PULL BOX EVERY 100' MINIMUM.
4. ALL CONDUCTOR TO BE COPPER, TYPE XHHW. VOLTAGE DROP LIMITED TO 3.0% FROM THE ELECTRICAL SERVICE TO THE LOAD.
5. ALL BELOW GROUND CONDUIT TO BE PVC SCHEDULE 40 BURIED 36" BELOW FINISHED GRADE MINIMUM WITH 36" RADIUS ELBOWS MINIMUM.
6. ALL ABOVE GROUND CONDUIT TO BE GRC.

KEYED NOTES

1. ABANDONED OVERHEAD BUILDING ELECTRICAL SERVICE TO BE REPLACED WITH NEW UNDERGROUND SERVICE AND ASSOCIATED XCEL ENERGY PAD MOUNTED TRANSFORMER, TWO XCEL ENERGY METERS, AND TWO SERVICE ENTRANCE RATED DISCONNECT SWITCHES (ONE FOR THE EXISTING BUILDING AND ONE FOR NEW PANEL 'W').
2. EXISTING OVERHEAD XCEL ENERGY ELECTRICAL SERVICE TO BE REPLACED WITH NEW UNDERGROUND SERVICE AND ASSOCIATED XCEL ENERGY PAD MOUNTED TRANSFORMER, TWO XCEL ENERGY METERS, AND TWO SERVICE ENTRANCE RATED DISCONNECT SWITCHES (ONE FOR THE EXISTING BUILDING AND ONE FOR NEW PANEL 'E').
3. XCEL ENERGY TO REMOVE EXISTING POWER POLES AND REPLACE WITH UNDERGROUND SERVICE. REFERENCE KEYED NOTES 1 AND 2.
4. XCEL ENERGY TO REMOVE EXISTING LIGHT POLE WHICH WILL BE REPLACED BY SITE LIGHTING.
5. XCEL ENERGY TO REMOVE ABANDONED LIGHT POLES. OVERHEAD WIRING HAS ALREADY BEEN REMOVED.
6. NEW BUILDING EEB2 DISCONNECT SWITCH TO BE FURNISHED AND INSTALLED ON BUILDING EEB2 EXTERIOR. BUILDING CONTRACTOR (NOT IN CONTRACT) TO FURNISH AND INSTALL RACEWAY AND CONDUCTOR FROM NEW DISCONNECT SWITCH TO EXISTING BUILDING SERVICE.
7. NEW BUILDING EEB1 DISCONNECT SWITCH TO BE FURNISHED AND INSTALLED ON BUILDING EEB2 EXTERIOR. FURNISH AND INSTALL 4" UNDERGROUND PVC SCHEDULE 40 RACEWAY WITH PULL WIRE FROM DISCONNECT SWITCH STUBBED INTO BUILDING EEB1. BUILDING CONTRACTOR (NOT IN CONTRACT) TO FURNISH AND INSTALL RACEWAY FROM STUB UP TO EXISTING BUILDING SERVICE AND CONDUCTOR FROM NEW DISCONNECT SWITCH TO EXISTING BUILDING SERVICE.
8. NEW INTERSTATE BUILDING DISCONNECT SWITCH TO BE FURNISHED AND INSTALLED ON BUILDING EXTERIOR. BUILDING CONTRACTOR (NOT IN CONTRACT) TO FURNISH AND INSTALL RACEWAY AND CONDUCTOR FROM NEW DISCONNECT SWITCH TO EXISTING BUILDING SERVICE.
9. FURNISH AND INSTALL 2" UNDERGROUND PVC SCHEDULE 40 RACEWAY WITH PULL TAPE AND TRACER WIRE FROM PANEL W TO FUTURE ART LOCATION, STUB AND CAP CONDUIT UNDERGROUND. VERIFY EXACT LOCATION IN FIELD WITH ARCHITECT. RECORD AND DOCUMENT THE LOCATION TO FACILITATE LOCATION OF THE CONDUIT IN THE FUTURE.
10. FURNISH AND INSTALL 2" UNDERGROUND PVC SCHEDULE 40 RACEWAY WITH PULL TAPE AND TRACER WIRE FROM PANEL E TO FUTURE ART LOCATION, STUB AND CAP CONDUIT UNDERGROUND. VERIFY EXACT LOCATION IN FIELD WITH ARCHITECT. RECORD AND DOCUMENT THE LOCATION TO FACILITATE LOCATION OF THE CONDUIT IN THE FUTURE.
11. ALL POLE MOUNTED RECEPTACLES SHALL HAVE SEPARATE CONTROLS LOCATED NEAR THE ELECTRICAL PANEL. CONTROLS SHALL LIMIT POWER AVAILABILITY BASED ON EVENTS. ALL EXTERIOR RECEPTACLES SHALL BE PROVIDED AS GFCI TYPE DEVICES WITH HEAVY DUTY WEATHERPROOF WHILE IN USE COVERS.
12. RECEPTACLES SHOWN ON THE EXTERIOR OF THE INTERSTATE BUILDING AND THE EEB BUILDING ARE FOR GENERAL CONCEPT ONLY. DURING THE DESIGN PROCESS OF THE INTERSTATE AND EEB BUILDINGS, EXTERIOR RECEPTACLES SHALL BE ADDED AT THAT TIME, AND POWERED FROM THE RESPECTIVE BUILDING. ALL EXTERIOR RECEPTACLES SHALL BE PROVIDED AS GFCI TYPE DEVICES WITH HEAVY DUTY WEATHERPROOF WHILE IN USE COVERS.
13. COORDINATE EXACT XCEL ENERGY TRANSFORMER LOCATION WITH OWNER AND XCEL ENERGY. TRANSFORMER SHALL BE LOCATED WITH 3' CLEARANCE ON ALL SIDES AND 10' CLEARANCE IN FRONT OF TRANSFORMER, MINIMUM. THIS INCLUDES BUILDINGS, WALLS AND LANDSCAPING. FURNISH AND INSTALL PRIMARY AND SECONDARY CONDUITS STUBBED INTO TRANSFORMER. XCEL ENERGY TO PROVIDE CONCRETE FOUNDATION, TRANSFORMER, AND CONDUCTOR TERMINATIONS.
14. COORDINATE EXACT LOCATION OF XCEL ENERGY VAULT WITH OWNER AND XCEL ENERGY. XCEL ENERGY TO FURNISH AND INSTALL APPROXIMATELY 7'x5'x6' DEEP VAULT LOCATED ON NORTH THIRD OF FESTIVAL STREET AT LEAST 5' FROM NEW WATER SERVICE.
15. XCEL ENERGY TO FURNISH AND INSTALL TWO 4" CONDUITS WITH PULL WIRE, 36" BELOW FINISHED GRADE MINIMUM, BETWEEN TRANSFORMERS AND VAULT. CONDUITS TO BE INSTALLED AT LEAST 5' FROM NEW WATER SERVICE.

BCER ENGINEERING | TECHNOLOGY | LIFE SAFETY
5420 Ward Rd
Arvada, CO 80002
303.422.7400
www.BCER.com
SSG Project Number: 15025.00

wenk
ASSOCIATES
PLANNERS & LANDSCAPE ARCHITECTS
303.628.0003

DENVER THE MILE HIGH CITY

RIVER NORTH PARK
DENVER, COLORADO

COLORADO LICENSED
ANDREW C. SCHULTZ
33012
11/01/18
PROFESSIONAL ENGINEER

FOR AND ON BEHALF OF WENK ASSOCIATES
NOT VALID WITHOUT ORIGINAL SIGNATURE

KEY PLAN:

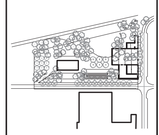

REVISIONS:
NAME DATE

DRAWN BY: ART
REVIEWED BY: SCS
PROJECT NUMBER: 15014
DATE: **OCTOBER 2018**
ISSUE: BID SET
SHEET TITLE: SITE ELEC. PLAN
SHEET NUMBER: LE1.1

XREFS=(w-15014-bs, x-SSG-Elec, Panels, E2.1 Site Lighting Plan, ACAD-X-SURVEY, RNP-Central lawn light locations, PL1_PLANTING, x-TITLEBLOCK-RNP) Layouts=(Layout1)
DIMSCALE=0 Q:\Data R-Z\Wenk\Rino Park 15025.00\Drawings\LE1.1 Site Electrical Plan.dwg APR 10, 2018 9:19AM GADAMS

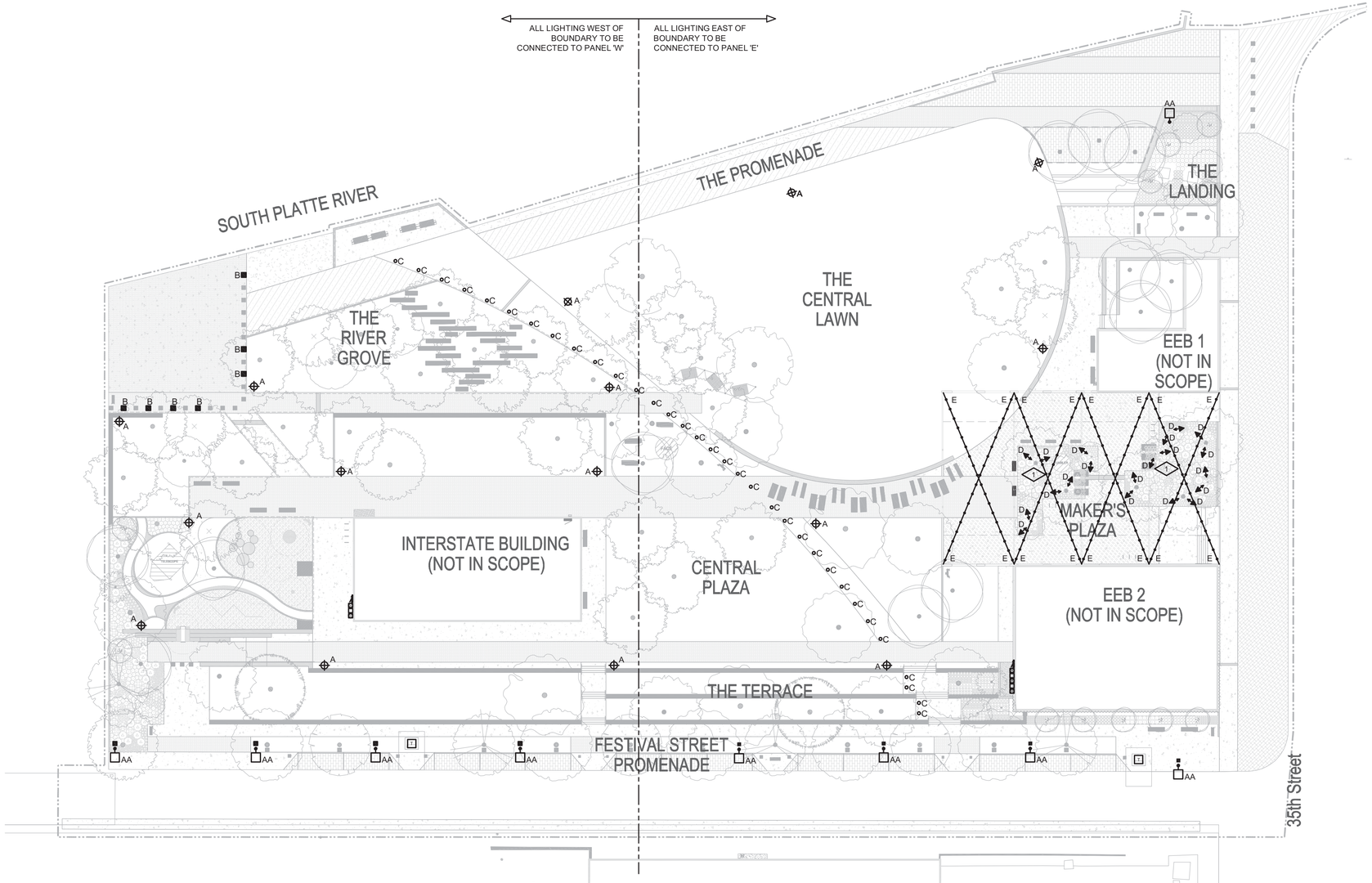

NORTH

1 SITE LIGHTING PLAN
SCALE: 1" = 30' - 0"

GENERAL NOTES

1. REFERENCE DRAWING LE4.0 PANEL SCHEDULE 'W' AND PANEL SCHEDULE 'E' FOR CONNECTION OF LUMINAIRE CIRCUIT.
2. ALL SITE LIGHTING CIRCUITS TO BE FED WITH (2#8+1#10G)1"C. INSTALL PULL BOX EVERY 200' MINIMUM.
3. ALL CONDUCTOR TO BE COPPER, TYPE XHHW. VOLTAGE DROP LIMITED TO 3.0% FROM THE ELECTRICAL SERVICE TO THE LOAD.
4. ALL BELOW GROUND CONDUIT TO BE PVC SCHEDULE 40.
5. ALL ABOVE GROUND CONDUIT TO BE GRC.

KEYED NOTES

1. FINAL LOCATION FOR TYPE 'D' LUMINAIRES TO BE STAKED IN FIELD BY LIGHTING DESIGNER.

BCER
ENGINEERING | TECHNOLOGY | LIFE SAFETY
5420 Ward Rd
Arvada, CO 80002
303.422.7400
www.BCER.com
SSG Project Number: 15025.00

wenk
ASSOCIATES
PLANNERS & LANDSCAPE ARCHITECTS
303.628.0003

DENVER
THE MILE HIGH CITY

RIVER NORTH PARK
DENVER, COLORADO

COLORADO LICENSED
SANDRA C. SCHLOW
33012
11/01/18
PROFESSIONAL ENGINEER

FOR AND ON BEHALF OF WENK ASSOCIATES
NOT VALID WITHOUT ORIGINAL SIGNATURE

KEY PLAN:

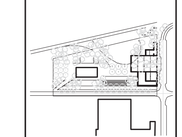

REVISIONS:
NAME DATE

DRAWN BY:
ART

REVIEWED BY:
SCS

PROJECT NUMBER:
15014

DATE:
OCTOBER 2018

ISSUE:
BID SET

SHEET TITLE:
SITE LTG. PLAN

SHEET NUMBER:
LE2.1

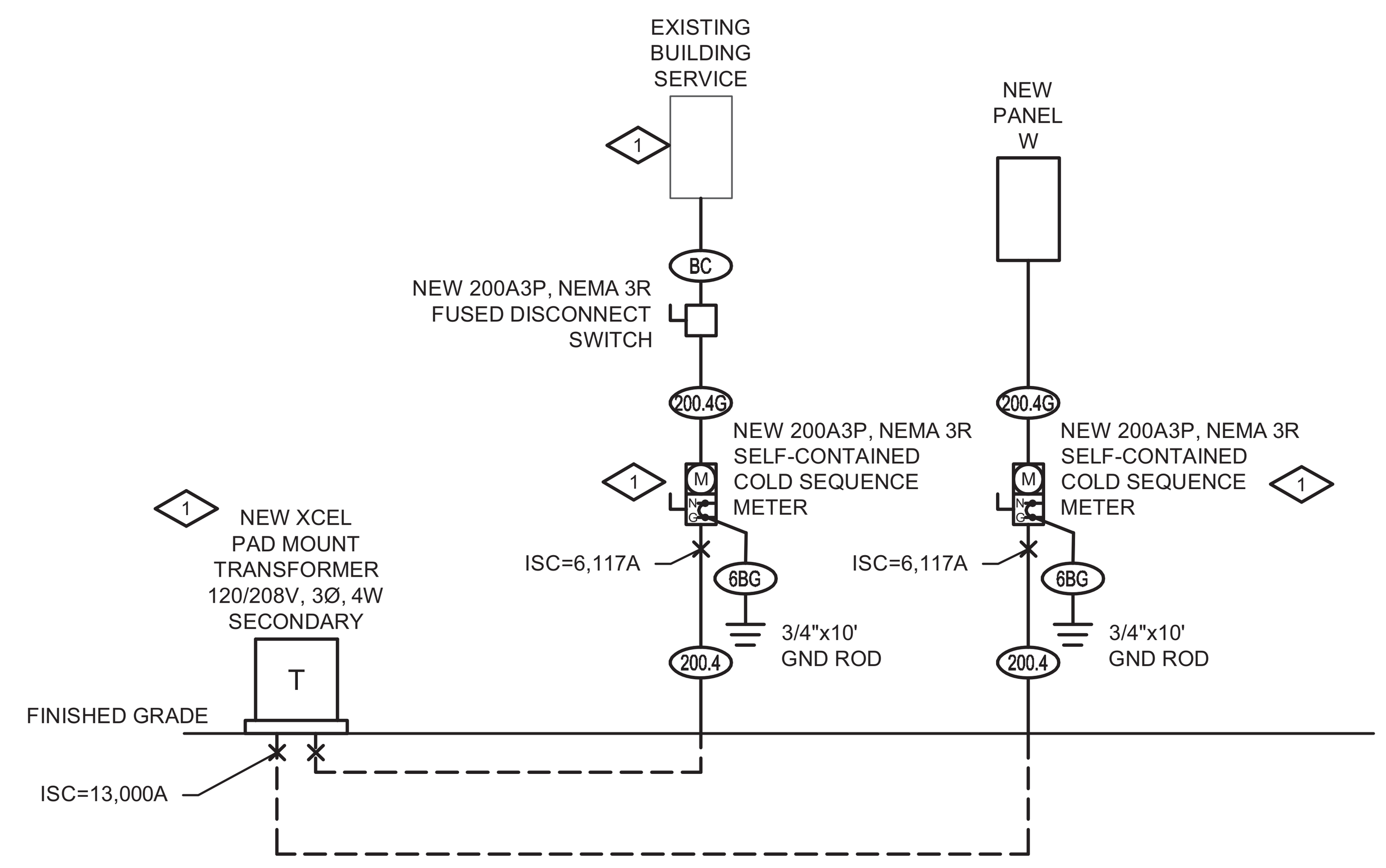

WEST SIDE (INTERSTATE BUILDING) ELECTRICAL ONE-LINE DIAGRAM

1 SCALE: NONE

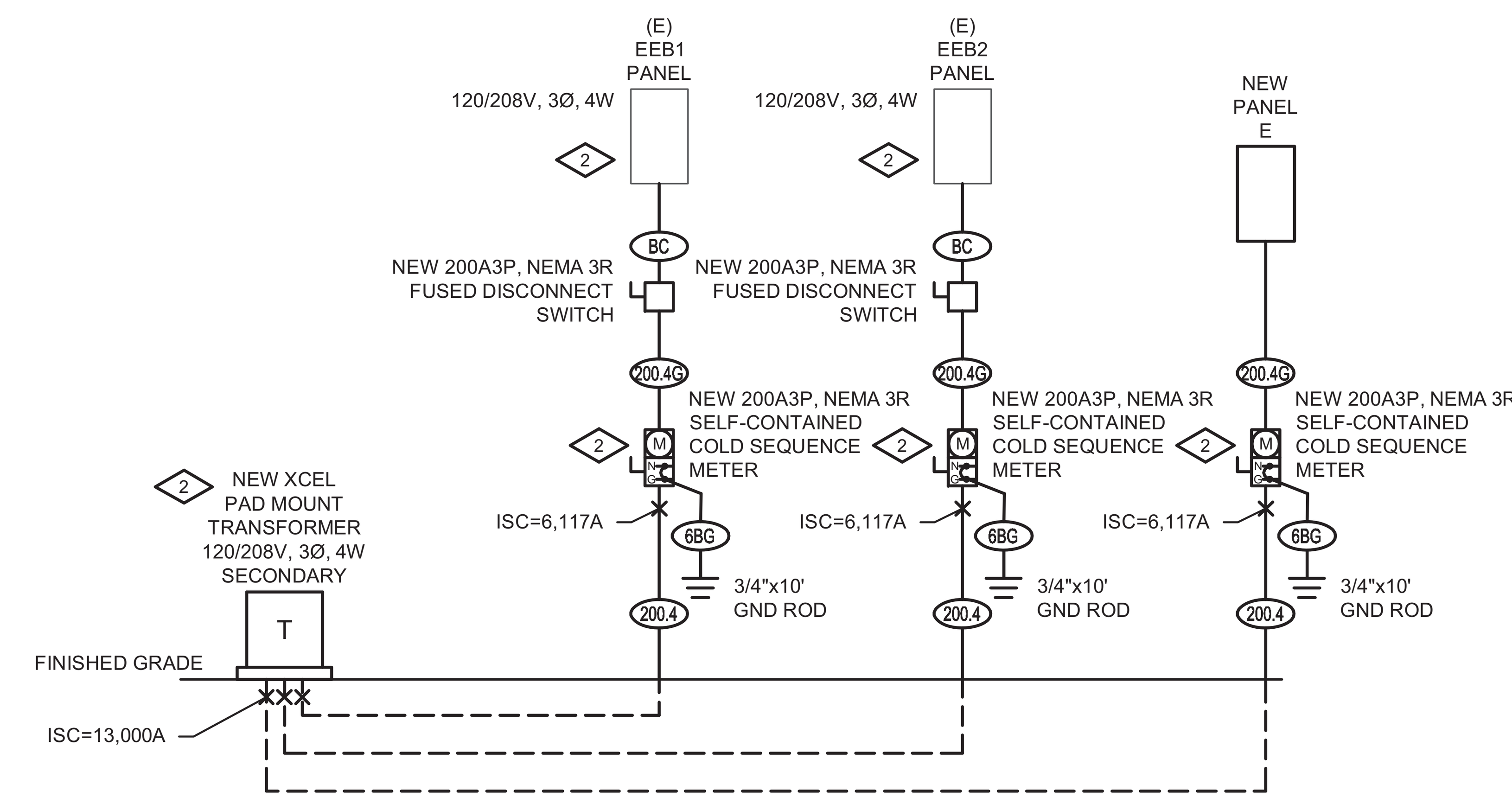

EAST SIDE (EEB BUILDING) ELECTRICAL ONE-LINE DIAGRAM

2 SCALE: NONE

GENERAL NOTES

1. CONTRACTOR SHALL SUBMIT PLANS TO XCEL ENERGY, PAY FOR PERMITS AND SERVICE, FURNISH AND INSTALL XCEL ENERGY SERVICE AND METER MATERIAL AND EQUIPMENT PER THEIR STANDARDS. CONTRACTOR TO COORDINATE WITH INTERSTATE AND EEB BUILDING PLANS TO CONFIRM BUILDING SERVICE CAPACITY SHOWN IS ACCURATE.
2. ALL CONDUCTOR TO BE COPPER, TYPE XHHW. VOLTAGE DROP LIMITED TO 3.0% FROM THE ELECTRICAL SERVICE TO THE LOAD.
3. ALL BELOW GROUND CONDUIT TO BE PVC SCHEDULE 40.
4. ALL ABOVE GROUND CONDUIT TO BE GRC.
5. ALL DISCONNECT SWITCHES AND PANELBOARDS SHALL BE MANUFACTURED BY GE, SIEMENS, OR SQUARE D WITH COPPER BUS.

KEYED NOTES

1. ABANDONED OVERHEAD INTERSTATE BUILDING ELECTRICAL SERVICE TO BE REPLACED WITH NEW UNDERGROUND SERVICE AND ASSOCIATED XCEL ENERGY PAD MOUNTED TRANSFORMER, TWO XCEL ENERGY METERS, AND TWO SERVICE ENTRANCE RATED DISCONNECT SWITCHES (ONE FOR THE EXISTING BUILDING AND ONE FOR NEW PANEL 'W').
2. EXISTING OVERHEAD XCEL ENERGY ELECTRICAL SERVICE TO BE REPLACED WITH NEW UNDERGROUND SERVICE AND ASSOCIATED XCEL ENERGY PAD MOUNTED TRANSFORMER, THREE XCEL ENERGY METERS, AND THREE SERVICE ENTRANCE RATED DISCONNECT SWITCHES (ONE FOR EACH OF THE TWO EEB BUILDINGS AND ONE FOR NEW PANEL 'E').

PANEL: **(N)W**

FEED FROM: 75KVA XFMR XCEL
VOLTAGE: 208/120
PHASE: 3
WIRE: 4
NEUTRAL: 100%
GROUND: STANDARD
ENCLOSURE: NEMA 3R
MOUNTING: SURFACE
MANUFACTURER: SEE SPECIFICATIONS
BUS AMPACITY: 225
MAIN: 200A MCB
AIC: 10,000

CKT NO	CKT DESCRIPTION	LOAD VA	LOAD TYPE	CKT BREAKER P	CKT BREAKER A	NOTE	NOTE	CKT BREAKER A	CKT BREAKER P	LOAD TYPE	LOAD VA	CKT DESCRIPTION	CKT NO
1	LTG-TYPE AA & B	370	L	1	20	1		50	2	S	3120	FOOD TRUCK 50A RECEPT	2
3	LTG-TYPE A	736	L	1	20	2		/	/	S	3120	-	4
5	RECEPT-TYPE AA	720	R	1	20			50	2	S	3120	FOOD TRUCK 50A RECEPT	6
7	RECEPT-TYPE A NORTH	900	R	1	20			/	/	S	3120	-	8
9	RECEPT-TYPE A SOUTH	360	R	1	20			50	2	S	3120	FOOD TRUCK 50A RECEPT	10
11	SPARE			1	20			/	/	S	3120	-	12
13	SPARE			1	20			50	2			SPARE	14
15	SPARE			1	20			/	/			-	16
17	SPARE			1	20			50	2			SPARE	18
19	SPARE			1	20			/	/			-	20
21	SPARE			1	20			-	-			EQUIPPED SPACE	22
23	SPARE			1	20			-	-			EQUIPPED SPACE	24
25	SPARE			1	20			-	-			EQUIPPED SPACE	26
27	SPARE			1	20			-	-			EQUIPPED SPACE	28
29	SPARE			1	20			-	-			EQUIPPED SPACE	30
31	EQUIPPED SPACE			-	-			-	-			EQUIPPED SPACE	32
33	EQUIPPED SPACE			-	-			-	-			EQUIPPED SPACE	34
35	EQUIPPED SPACE			-	-			-	-			EQUIPPED SPACE	36
37	EQUIPPED SPACE			-	-			-	-			EQUIPPED SPACE	38
39	EQUIPPED SPACE			-	-			-	-			EQUIPPED SPACE	40
41	EQUIPPED SPACE			-	-			-	-			EQUIPPED SPACE	42

LOAD TYPE	CONNECTED (KVA) A	B	C	TOTAL	DEMAND FACTOR	DEMAND (KVA) A	B	C	TOTAL
LIGHTING (L)	0.4	0.7	0.0	1.1	1.25	0.5	0.9	0.0	1.4
RECEPTACLE (R)	0.9	0.4	0.7	2.0	1.00	0.9	0.4	0.7	2.0
REC (>10000VA) (R)	0.0	0.0	0.0	0.0	0.50	0.0	0.0	0.0	0.0
HEATER (H)	0.0	0.0	0.0	0.0	1.00	0.0	0.0	0.0	0.0
LARGEST MOTOR (M)	0.0	0.0	0.0	0.0	1.25	0.0	0.0	0.0	0.0
REMAIN MOTOR (M)	0.0	0.0	0.0	0.0	1.00	0.0	0.0	0.0	0.0
CONTINUOUS LOAD (CL)	0.0	0.0	0.0	0.0	1.25	0.0	0.0	0.0	0.0
KITCHEN LOADS (K)	0.0	0.0	0.0	0.0	1.00	0.0	0.0	0.0	0.0
SPECIFIC LOADS (S)	6.2	6.2	6.2	18.7	1.00	6.2	6.2	6.2	18.7
NONCOINCIDENTAL (N)	0.0	0.0	0.0	0.0	0.00	0.0	0.0	0.0	0.0
OTHER LOAD (O)	0.0	0.0	0.0	0.0	1.00	0.0	0.0	0.0	0.0
TOTAL DEMAND (KVA)						7.6	7.5	7.0	22.1
SPARE (KVA)						17.4	17.5	18.0	52.9
TOTAL (A/PH)						**63.4**	**62.7**	**58.0**	**61.3**
SPARE (A/PH)						144.8	145.5	150.2	146.9

NOTES:
1. CONNECT LIGHTING CIRCUIT TO TORK #201B TIME SWITCH IN SERIES WITH PHOTOCELL TO CONTROL LIGHTS ON CIRCUIT FROM DAWN TO DUSK.
2. CONNECT LIGHTING CIRCUIT TO TORK #201B TIME SWITCH IN SERIES WITH PHOTOCELL TO CONTROL LIGHTS ON CIRCUIT FROM DAWN TO CLOSE.

Updated: 4/4/2018 14:32

PANEL: **(N)E**

FEED FROM: 75KVA XFMR XCEL
VOLTAGE: 208/120
PHASE: 3
WIRE: 4
NEUTRAL: 100%
GROUND: STANDARD
ENCLOSURE: NEMA 3R
MOUNTING: SURFACE
MANUFACTURER: SEE SPECIFICATIONS
BUS AMPACITY: 225
MAIN: 200A MCB
AIC: 10,000

CKT NO	CKT DESCRIPTION	LOAD VA	LOAD TYPE	CKT BREAKER P	CKT BREAKER A	NOTE	NOTE	CKT BREAKER A	CKT BREAKER P	LOAD TYPE	LOAD VA	CKT DESCRIPTION	CKT NO
1	LTG-TYPE AA	162	L	1	20	1		50	2	S	3120	FOOD TRUCK 50A RECEPT	2
3	LTG-TYPE A	552	L	1	20	2		/	/	S	3120	-	4
5	LTG-TYPE E	800	L	1	20	2		50	2	S	3120	FOOD TRUCK 50A RECEPT	6
7	LTG-TYPE E	800	L	1	20	2		/	/	S	3120	-	8
9	LTG-TYPE D	300	L	1	20	2		50	2	S	3120	FOOD TRUCK 50A RECEPT	10
11	SPARE			1	20	2		/	/	S	3120	-	12
13	SPARE			1	20			50	2			SPARE	14
15	RECEPT-TYPE AA	540	R	1	20			/	/			-	16
17	RECEPT-TYPE A NORTH	720	R	1	20			50	2			SPARE	18
19	RECEPT-TYPE A SOUTH	180	R	1	20			/	/			-	20
21	SPARE			1	20			50	2	S	3120	LAWN 50A RECEPT	22
23	SPARE			1	20			/	/	S	3120	-	24
25	SPARE			1	20			50	2	S	3120	LAWN 50A RECEPT	26
27	SPARE			1	20			/	/	S	3120	-	28
29	SPARE			1	20			-	-			EQUIPPED SPACE	30
31	EQUIPPED SPACE			-	-			-	-			EQUIPPED SPACE	32
33	EQUIPPED SPACE			-	-			-	-			EQUIPPED SPACE	34
35	EQUIPPED SPACE			-	-			-	-			EQUIPPED SPACE	36
37	EQUIPPED SPACE			-	-			-	-			EQUIPPED SPACE	38
39	EQUIPPED SPACE			-	-			-	-			EQUIPPED SPACE	40
41	EQUIPPED SPACE			-	-			-	-			EQUIPPED SPACE	42

LOAD TYPE	CONNECTED (KVA) A	B	C	TOTAL	DEMAND FACTOR	DEMAND (KVA) A	B	C	TOTAL
LIGHTING (L)	1.0	0.9	0.8	2.6	1.25	1.2	1.1	1.0	3.3
RECEPTACLE (R)	0.2	0.5	0.7	1.4	1.00	0.2	0.5	0.7	1.4
REC (>10000VA) (R)	0.0	0.0	0.0	0.0	0.50	0.0	0.0	0.0	0.0
HEATER (H)	0.0	0.0	0.0	0.0	1.00	0.0	0.0	0.0	0.0
LARGEST MOTOR (M)	0.0	0.0	0.0	0.0	1.25	0.0	0.0	0.0	0.0
REMAIN MOTOR (M)	0.0	0.0	0.0	0.0	1.00	0.0	0.0	0.0	0.0
CONTINUOUS LOAD (CL)	0.0	0.0	0.0	0.0	1.25	0.0	0.0	0.0	0.0
KITCHEN LOADS (K)	0.0	0.0	0.0	0.0	1.00	0.0	0.0	0.0	0.0
SPECIFIC LOADS (S)	9.4	12.5	9.4	31.2	1.00	9.4	12.5	9.4	31.2
NONCOINCIDENTAL (N)	0.0	0.0	0.0	0.0	0.00	0.0	0.0	0.0	0.0
OTHER LOAD (O)	0.0	0.0	0.0	0.0	1.00	0.0	0.0	0.0	0.0
TOTAL DEMAND (KVA)						10.7	14.1	11.1	35.9
SPARE (KVA)						14.3	10.9	13.9	39.1
TOTAL (A/PH)						**89.5**	**117.4**	**92.3**	**99.7**
SPARE (A/PH)						118.7	90.8	115.8	108.5

NOTES:
1. CONNECT LIGHTING CIRCUIT TO TORK #201B TIME SWITCH IN SERIES WITH PHOTOCELL TO CONTROL LIGHTS ON CIRCUIT FROM DAWN TO DUSK.
2. CONNECT LIGHTING CIRCUIT TO TORK #201B TIME SWITCH IN SERIES WITH PHOTOCELL TO CONTROL LIGHTS ON CIRCUIT FROM DAWN TO CLOSE.

Updated: 10/30/2018 16:51

FEEDER SCHEDULE

KEY	CONDUCTORS	MINIMUM CONDUIT SIZE
200.4G	4 3/0 & 1 #6 GND	2"
380.4G	4 500 KCMIL & 1 #3 GND	3-1/2"
200.4	4 #3/0	2"
380.4	4 #500 KCMIL	3"
6BG	1 #6 GND	1/2"
2BG	1 #2 CU GND	1/2"
1/0BG	1 #1/0 CU GND	3/4"
BC	CONDUCTORS AND CONDUITS BY BUILDING COTRACTOR	

BCER
ENGINEERING | TECHNOLOGY | LIFE SAFETY
5420 Ward Rd
Arvada, CO 80002
303.422.7400
www.BCER.com
SSG Project Number: 15025.00

wenk ASSOCIATES
PLANNERS & LANDSCAPE ARCHITECTS
303.628.0003

DENVER THE MILE HIGH CITY

RIVER NORTH PARK
DENVER, COLORADO

COLORADO LICENSED PROFESSIONAL ENGINEER SANDRA C. SCANLON 33012 11/01/18

FOR AND ON BEHALF OF WENK ASSOCIATES
NOT VALID WITHOUT ORIGINAL SIGNATURE

KEY PLAN:

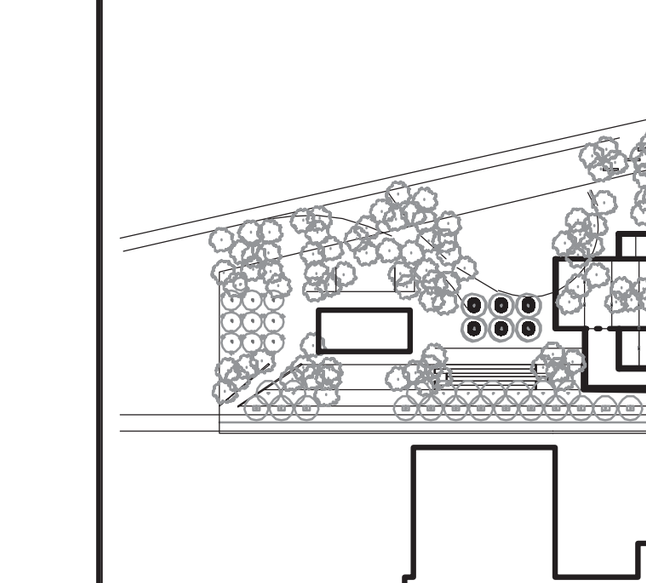

REVISIONS:
NAME DATE

DRAWN BY: ART
REVIEWED BY: SCS
PROJECT NUMBER: 15014
DATE: **OCTOBER 2018**
ISSUE: BID SET
SHEET TITLE: ELEC. ONE-LINE
SHEET NUMBER: LE4.0

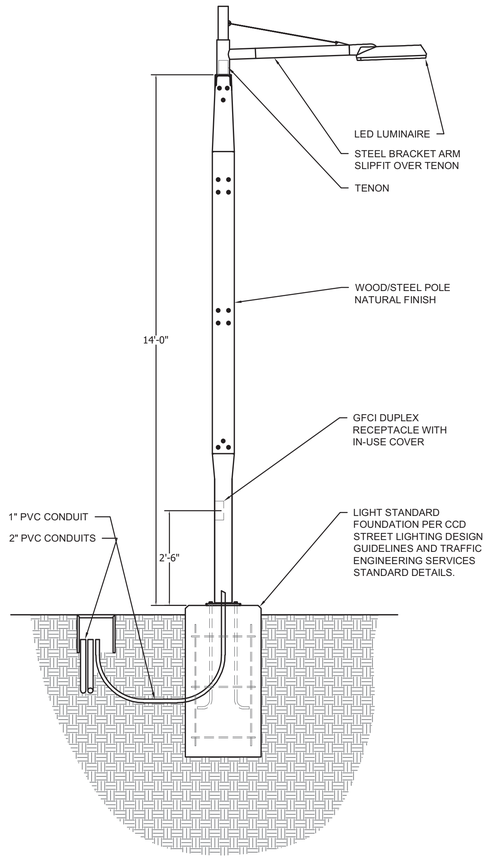

1 TYPE "AA" POLE DETAIL
SCALE: NONE

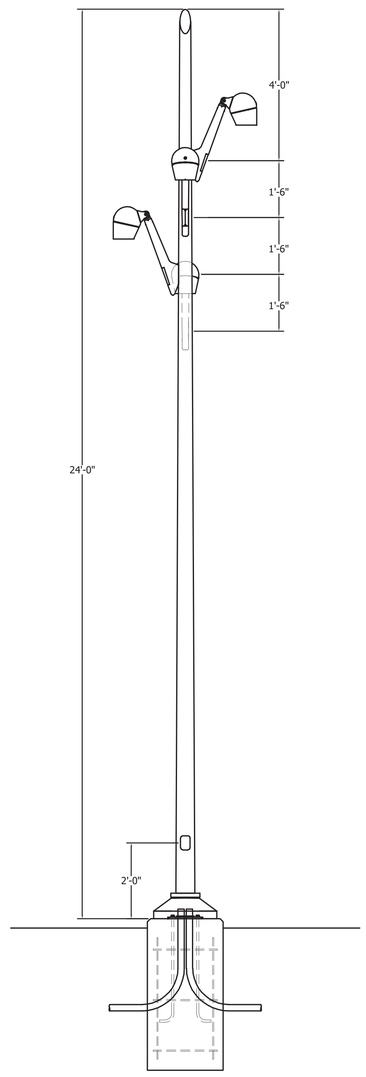

2 TYPE "A" POLE DETAIL
SCALE: NONE

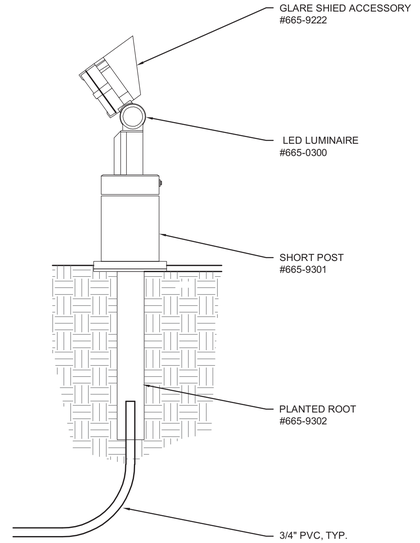

3 TYPE "D" GROUND-MOUNT LANDSCAPE LIGHT
SCALE: NONE

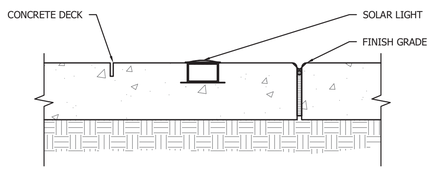

4 TYPE "C" IN-GRADE SOLAR LIGHT
SCALE: NONE

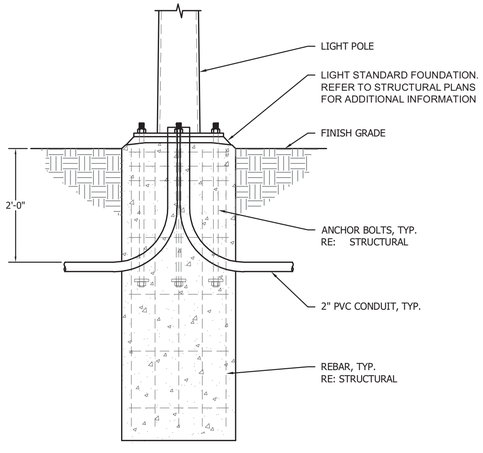

5 TYPE "A" FOUNDATION DETAIL
SCALE: NONE

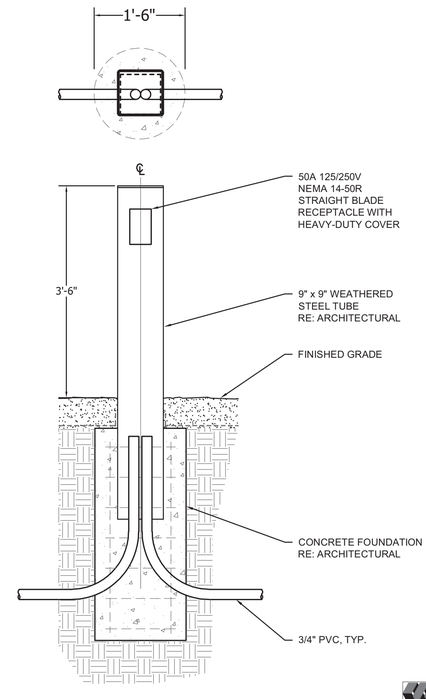

6 BOLLARD WITH 50A RECEPTACLE FOR FOOD TRUCKS
SCALE: NONE

wenk
ASSOCIATES
PLANNERS & LANDSCAPE ARCHITECTS
303.628.0003

DENVER
THE MILE HIGH CITY

RIVER NORTH PARK
DENVER, COLORADO

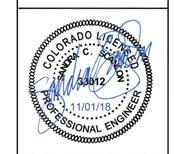

FOR AND ON BEHALF OF WENK ASSOCIATES
NOT VALID WITHOUT ORIGINAL SIGNATURE

KEY PLAN:

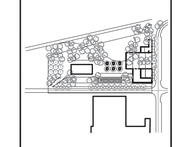

REVISIONS:
NAME DATE

DRAWN BY:
ART

REVIEWED BY:
SCS

PROJECT NUMBER:
15014

DATE:
OCTOBER 2018

ISSUE:
BID SET

SHEET TITLE:
ELEC. DETAILS

SHEET NUMBER:
LE5.0

BCER
ENGINEERING | TECHNOLOGY | LIFE SAFETY
5420 Ward Rd
Arvada, CO 80002
303.422.7400
www.BCER.com

SSG Project Number: 15025.00

RIVER NORTH PARK - LUMINAIRE SCHEDULE

KEY	SOURCE				DESCRIPTION	MOUNTING	FINISH	IP RATING	MANUFACTURER	CATALOG NUMBER	VOLTAGE	POWER FACTOR	TOTAL VA
	TYPE	CRI	CCT	INITIAL LUMENS									
A	LED	80+	3000K	3,010 (x4) 3,634 (x4)	24-foot round tapered pole with (4) 36-watt adjustable LED luminaires stepped around the pole at 90º with duplex GFCI receptacle and In-Use cover. Furnish luminaires with glare control louver. Luminaire must be UL Listed and suitable for use in Wet Locations. Pole must suitable for use in 100MPH wind.	CONCRETE FOUNDATION	CUSTOM RAL POWDERCOAT (CORTEN)	IP66	SELUX OLMO MEDIO Or alternate by: LIGMAN LIGHTING ODESSA CLUSTER	(Qty = 4) OLML-F80-SSx-L23-30-SP-120 + (Qty = 1) O-AT64156-24-SP-RN4-BC9 UOD-21012-4X36W LED-VW-W30-07-120/277V-A80231-07-APD-RSA-5018-20'-5"-GFCI-07	120V	0.9	92
AA	LED	80+	3000K	4,493	14-foot square timber and steel pole with LED luminaire and GFCI receptacle with in-use cover. Furnish pole with 4"O.D. x 6" tall tenon. Furnish luminaire with Type III distribution. BUG rating shall not exceed B3-U0-G2. Luminaire must be UL Listed and suitable for use in Wet Locations.	CONCRETE FOUNDATION	CUSTOM RAL POWDERCOAT (CORTEN)	IP66	STRUCTURA ALBA SERIES WE-EF LIGHTING RFL540-SE LED	ALBA-12-S-C-T0406 661-2127 + 661-9334	120V	0.9	42
B	LED	80+	3000K	538	Ground-mounted LED Bollard. Luminaire must be UL Listed and suitable for use in Wet Locations.	CONCRETE FOUNDATION	CUSTOM RAL (CORTEN)	IP68	LOUIS POULSEN FLINDT-B	FLINDT-B / 43.3 IN / 15W LED/3000K / 120-277V / CORTEN COLOR / POST W/BASE PLATE / DIM 0-10V / 10000135834	120V	0.9	14
C	LED	N/A	N/A		In-grade solar LED marker light. 4" diameter round. Luminaire must be UL Listed and suitable for use in Wet Locations.	IN-GRADE	BRUSHED STAINLESS (GREEN LED)	IP68	METEOR LIGHTING	SH-270C-GEN-BS-HS	N/A	0.9	N/A
D	LED	80+	3000K	246	Ground-mounted LED landscape accent light. Furnish luminaire with accessory glare shield and ground-mounting hardware. Luminaire must be UL Listed and suitable for use in Wet Locations.	ABOVE GRADE	BLACK	IP66	WE-EF LIGHTING FLC121	665-0330-BLACK / 665-9301 / 665-9302 / 665-9222	120V	0.9	15
E	LED	N/A	3000K	220 (per lamp)	100-ft Commercial-grade heavy-duty outdoor 14AWG 2-wire light string. Furnish string with 50 medim-base (E26) sockets 24-inches on center. Furnish light string with E26-base 2-watt A15 Clear LED lamp by Philips #461111. Light string must be UL Listed and suitable for use in Wet Locations.	SUSPENDED FROM STRUCTURE VIA AIRCRAFT CABLE	Black Cord & Sockets	IP65	AMERICAN LIGHTING	LS-M-24-100-BK	120V	0.9	100

BCER
ENGINEERING | TECHNOLOGY | LIFE SAFETY
5420 Ward Rd
Arvada, CO 80002
303.422.7400
www.BCER.com
SSG Project Number: 15025.00

wenk
ASSOCIATES
PLANNERS & LANDSCAPE ARCHITECTS
303.628.0003

DENVER
THE MILE HIGH CITY

RIVER NORTH PARK
DENVER, COLORADO

COLORADO LICENSED
STEVEN C. SCHULTZ
33012
11/01/18
PROFESSIONAL ENGINEER

FOR AND ON BEHALF OF WENK ASSOCIATES
NOT VALID WITHOUT ORIGINAL SIGNATURE

KEY PLAN:

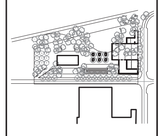

REVISIONS:

NAME	DATE

DRAWN BY:
ART

REVIEWED BY:
SCS

PROJECT NUMBER:
15014

DATE:
OCTOBER 2018

ISSUE:
BID SET

SHEET TITLE:
ELEC. SCHEDULES

SHEET NUMBER:
LE6.0

NOTES

1 ALL STEEL IN CONTACT WITH OR BELOW FINISH GRADE TO BE GALVANIZED OR COATED WITH RUBBERIZED WATERPROOFING TO MIN 2" ABOVE FINISH GRADE.
2. APPLY EXTERIOR GRADE POLYASPARTIC CONCRETE SEALER, SATIN FINISH TO ALL EXPOSED SURFACES AFTER INSTALLATION
3 ALL HORIZONTAL FINISHED SURFACES SHALL BE GROUND SMOOTH.
4 ALL CUT CONCRETE EDGES SHALL BE CHAMFERED OR ROUNDED OVER SMOOTH.
5 ALL COUNTERSINK HOLES SHALL BE FILLED WITH ARDEX PATCHING COMPOUND OR SIM. AFTER INSTALLATION.
6 WIDTH / LENGTH OF CERTAIN ELEMENTS IS ADJUSTABLE. CONSULT ARCHITECT.
7 PROVIDE SHOP DRAWINGS TO ARCHITECT FOR REVIEW BEFORE ORDERING MATERIALS OR FABRICATING ELEMENTS.

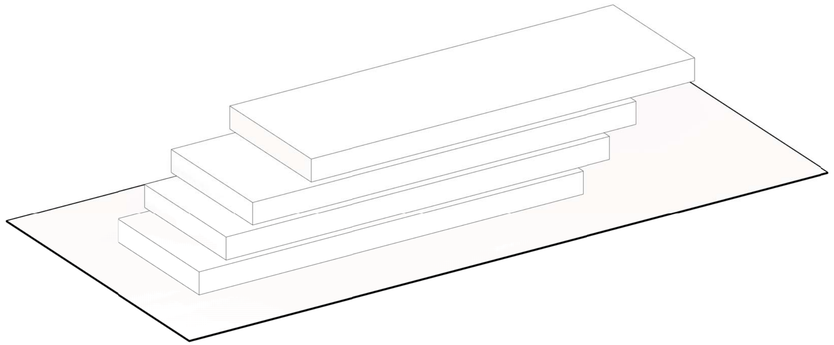

9 3D - 'STACK' BENCH

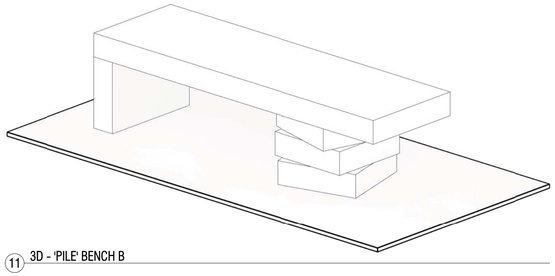

11 3D - 'PILE' BENCH B

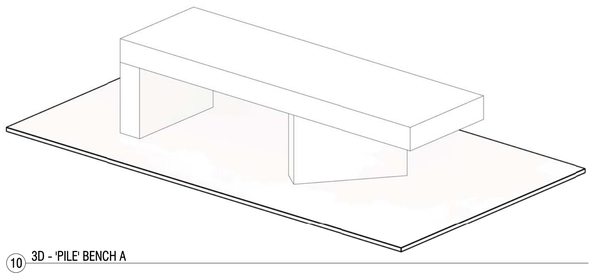

10 3D - 'PILE' BENCH A

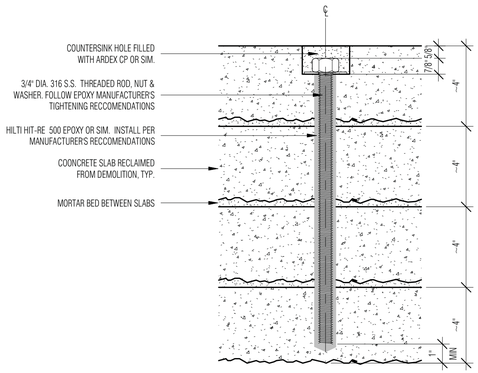

8 'PILE' & 'STACK' BENCH - ANCHORING ROD DETAIL 'A'
3" = 1'-0"

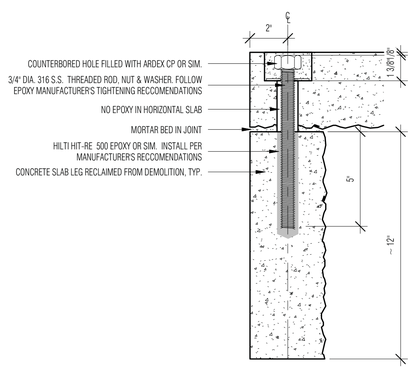

7 'PILE' BENCH - ANCHORING ROD DETAIL 'B'
3" = 1'-0"

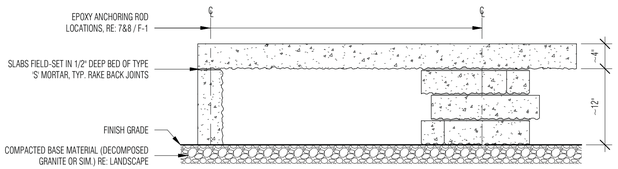

6 'PILE' BENCH B - FRONT
1" = 1'-0"

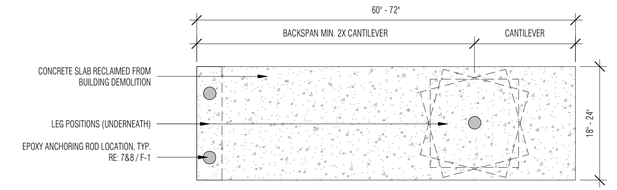

5 'PILE' BENCH B - TOP
1" = 1'-0"

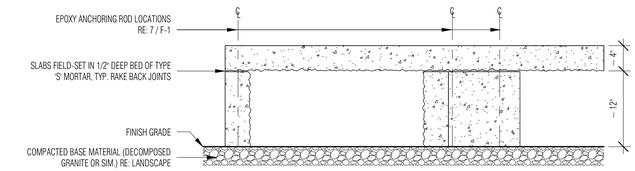

4 'PILE' BENCH A - FRONT
1" = 1'-0"

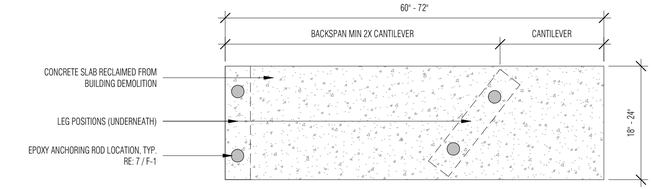

3 'PILE' BENCH A - TOP
1" = 1'-0"

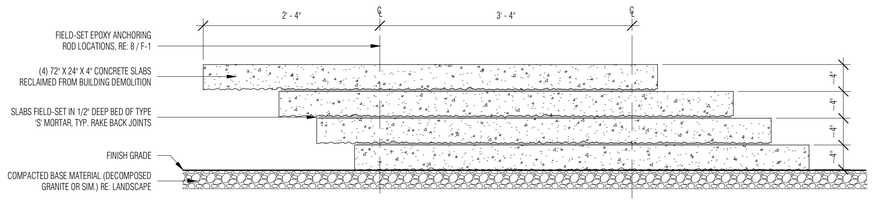

2 'STACK' BENCH - FRONT
1" = 1'-0"

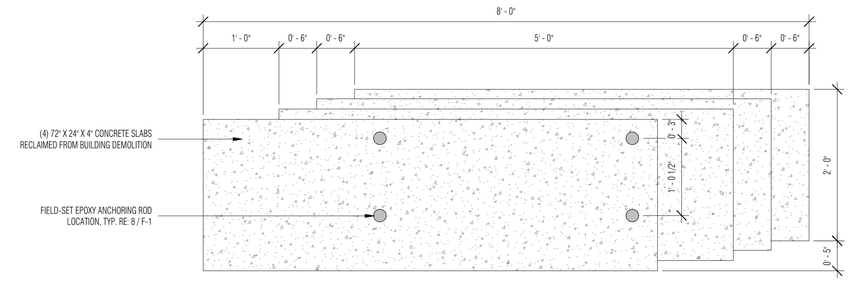

1 'STACK' BENCH - TOP
1" = 1'-0"

wenk
ASSOCIATES
PLANNERS & LANDSCAPE ARCHITECTS
303.628.0003

DENVER
THE MILE HIGH CITY

RIVER NORTH PARK
DENVER, COLORADO

FOR AND ON BEHALF OF WENK ASSOCIATES
NOT VALID WITHOUT ORIGINAL SIGNATURE

KEY PLAN:

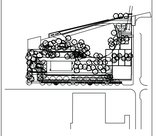

REVISIONS:
NAME DATE

DRAWN BY:
JR

REVIEWED BY:
MMM

PROJECT NUMBER:
15014

DATE:
OCTOBER 2018

ISSUE:
BID SET

SHEET TITLE:
CONCRETE BENCHES

SHEET NUMBER:
F-1

NOTES

1. WOOD SEATING SURFACES TO BE EITHER TREX BRAND COMPOSITE LUMBER OR KEBONY BRAND 'CLEAR' BIO-TREATED PINUS RADIATA. W/ MANUFACTURER APPROVED U.V. RESISTANT OIL FINISH.
2. ALL EXPOSED WOOD SURFACES TO BE SANDED SMOOTH TO SPLINTER FREE FINISH, EASE EXPOSED CORNERS W/ 1/8" ROUNDOVER.
3. STEEL ELEMENTS TO BE EITHER CORTEN ALLOY OR SHOP GALVANIZED PRIOR TO FINISHING.
4. ALL STEEL IN CONTACT WITH OR BELOW FINISH GRADE TO BE GALVANIZED OR COATED WITH RUBBERIZED WATERPROOFING TO MIN 2" ABOVE FINISH GRADE.
5. GRIND SMOOTH ALL WELDED CONNECTIONS AND REMOVE ANY WELD SPLATTER.
6. SHARP STEEL CORNERS AND/OR CUT EDGES SHALL BE GROUND ROUND AND SMOOTH
7. WIDTH / LENGTH OF CERTAIN ELEMENTS IS ADJUSTABLE. CONSULT ARCHITECT.
8. PROVIDE SHOP DRAWINGS TO ARCHITECT FOR REVIEW BEFORE ORDERING MATERIALS OR FABRICATING ELEMENTS.

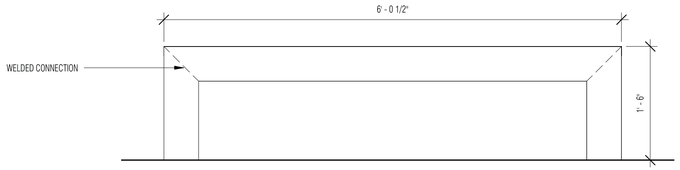

4 BENCH - I BEAM - FRONT
1" = 1'-0"

GRIND ALL WELDS SMOOTH, TYP.

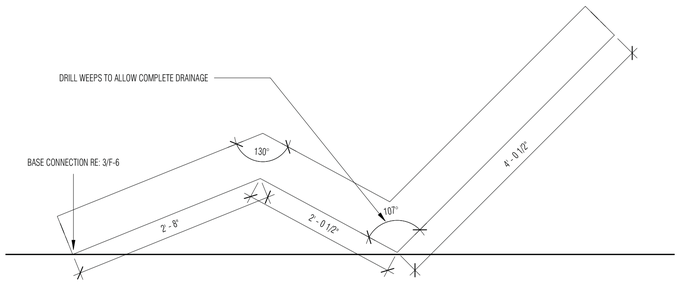

7 CHAISE - I BEAM - FRONT
1" = 1'-0"

GRIND ALL WELDS SMOOTH, TYP.

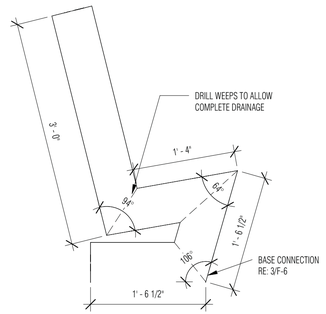

15 CHAIR - I BEAM -SIDE
1" = 1'-0"

GRIND ALL WELDS SMOOTH, TYP.

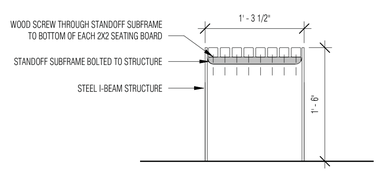

2 BENCH - I BEAM - SIDE
1" = 1'-0"

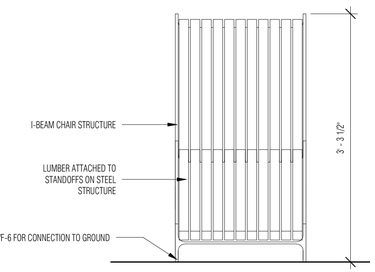

8 CHAISE - I BEAM - SIDE
1" = 1'-0"

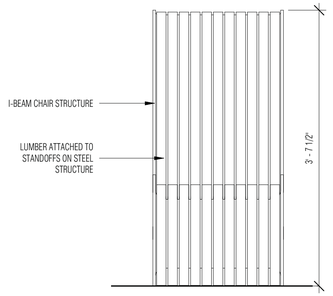

6 CHAIR - IBEAM - FRONT
1" = 1'-0"

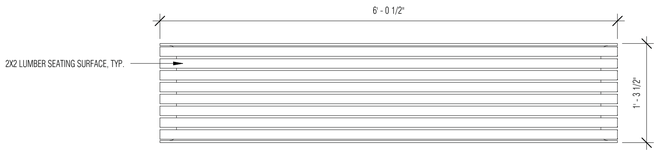

5 BENCH - I BEAM
1" = 1'-0"

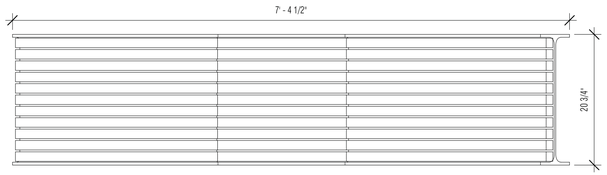

3 CHAISE - I BEAM
1" = 1'-0"

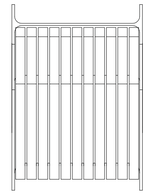

1 CHAIR - I BEAM - TOP
1" = 1'-0"

w e n k

ASSOCIATES
PLANNERS & LANDSCAPE ARCHITECTS
303.628.0003

DENVER
THE MILE HIGH CITY

RIVER NORTH PARK
DENVER, COLORADO

FOR AND ON BEHALF OF WENK ASSOCIATES
NOT VALID WITHOUT ORIGINAL SIGNATURE

KEY PLAN:

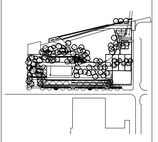

REVISIONS:

NAME	DATE

DRAWN BY: JR

REVIEWED BY: MMM

PROJECT NUMBER: 15014

DATE: **OCTOBER 2018**

ISSUE: BID SET

SHEET TITLE: I-BEAM FURNITURE

SHEET NUMBER: F-2

NOTES

1. WOOD SEATING SURFACES TO BE EITHER TREX BRAND COMPOSITE LUMBER OR KEBONY BRAND 'CLEAR' BIO-TREATED PINUS RADIATA. W/ MANUFACTURER APPROVED U.V. RESISTANT OIL FINISH. PROVIDE SAMPLES AND ALTERNATES TO ARCHITECT PRIOR TO ORDERING MATERIALS
2. ALL EXPOSED WOOD SURFACES TO BE SANDED SMOOTH TO SPLINTER FREE FINISH, EASE EXPOSED CORNERS W/ 1/8" ROUNDOVER.
3. STEEL ELEMENTS TO BE EITHER CORTEN ALLOY OR SHOP GALVANIZED.
4. ALL STEEL IN CONTACT WITH OR BELOW FINISH GRADE TO BE COATED WITH APPROVED RUBBERIZED WATERPROOFING TO MIN 2" ABOVE FINISH GRADE.
5. GRIND SMOOTH ALL WELDED CONNECTIONS AND REMOVE ANY WELD SPLATTER.
6. SHARP STEEL CORNERS AND/OR CUT EDGES SHALL BE GROUND ROUND AND SMOOTH
7. WIDTH / LENGTH OF CERTAIN ELEMENTS IS ADJUSTABLE. CONSULT ARCHITECT.
8. PROVIDE SHOP DRAWINGS TO ARCHITECT FOR REVIEW BEFORE ORDERING MATERIALS OR FABRICATING ELEMENTS.

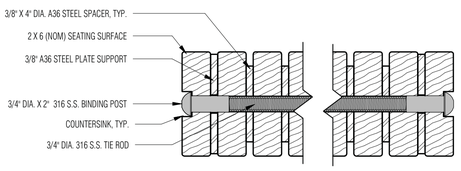

9 BENCH - TIE ROD DETAIL
3" = 1'-0"

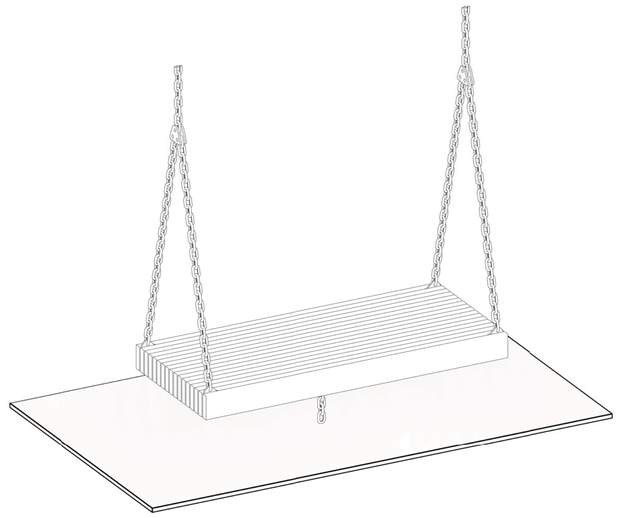

7 3D - SWING BENCH

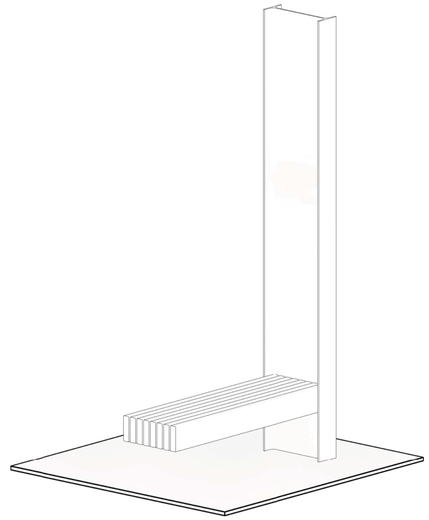

4 3D - LANDMARK BENCH

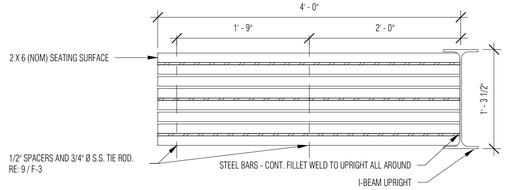

2 BENCH - LANDMARK
1" = 1'-0"

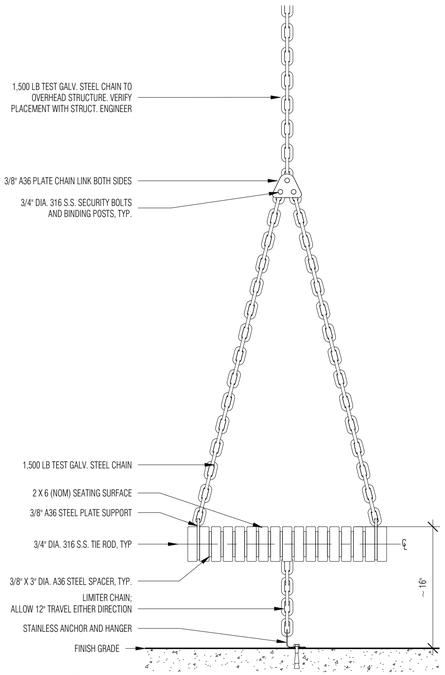

8 SWING BENCH - SIDE
1" = 1'-0"

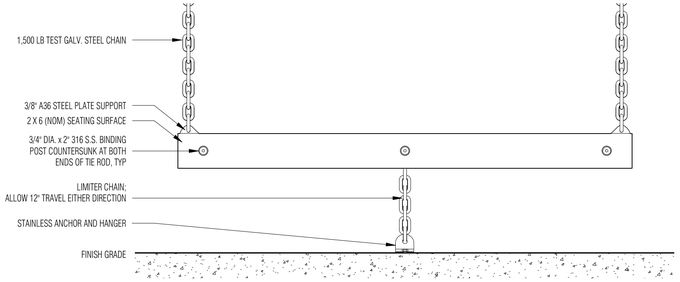

6 SWING BENCH - FRONT
1" = 1'-0"

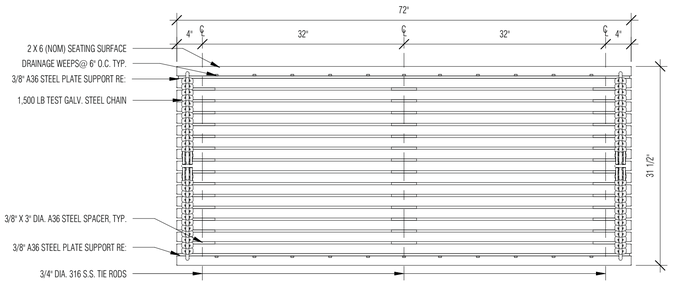

5 SWING BENCH - TOP
1" = 1'-0"

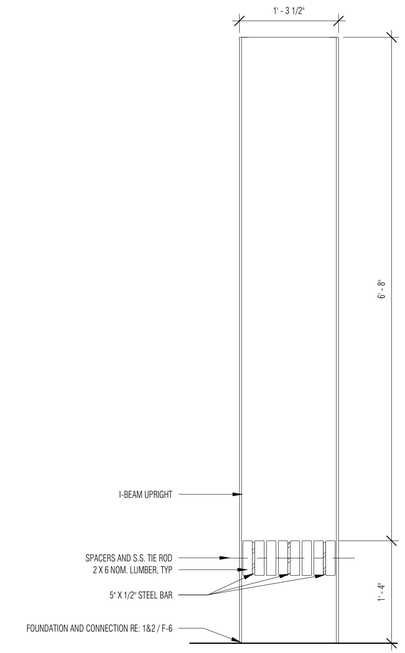

3 BENCH - LANDMARK - SIDE
1" = 1'-0"

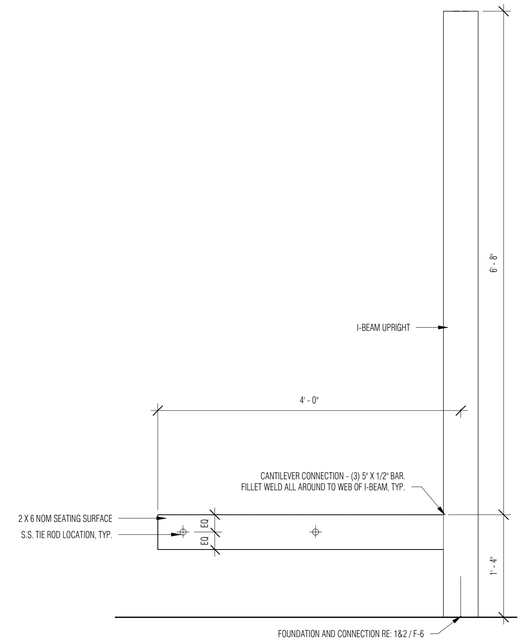

1 BENCH - LANDMARK - FRONT
1" = 1'-0"

w e n k

ASSOCIATES
PLANNERS & LANDSCAPE ARCHITECTS
303.628.0003

DENVER
THE MILE HIGH CITY

RIVER NORTH PARK
DENVER, COLORADO

FOR AND ON BEHALF OF WENK ASSOCIATES
NOT VALID WITHOUT ORIGINAL SIGNATURE

KEY PLAN:

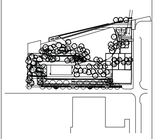

REVISIONS:

NAME	DATE

DRAWN BY: JR

REVIEWED BY: MMM

PROJECT NUMBER: 15014

DATE: **OCTOBER 2018**

ISSUE: BID SET

SHEET TITLE: BENCHES

SHEET NUMBER: F-3

PIPE COMPONENTS AND NOTES

- FOUR-WAY TEE
- LONG-RADIUS ELBOW
- STRAIGHT PIPE SECTION W/ FLANGE
- BUTTERFLY VALVE

ALL ABOVE GROUND PIPE & PIPE FITINGS TO BE 4" DIA. CARBON STEEL CLASS 150 FLANGED BOLT-ON TYPE. ALL BELOW GROUND PIPE TO BE 4" DIA. SCHEDULE 40 PVC, PRIME AND SOLVENT WELD ALL JOINTS. ALL ABOVE GROUND STEEL PIPE TO BE PRIMED AND PAINTED (2 COATS) WITH GLOSS OIL BASED OR ALKYD ENAMEL PAINT. PAINT COLOR TO BE SELECTED BY PROJECT MANAGER AND ARCHITECT TO COORDINATE WITH THE ARTISTS' WORK ON ADJACENT PIECES. BELOW GROUND STEEL PIPE TO BE COATED W/ RUBBERIZED WATERPROOFING TO 2" ABOVE FINISH GRADE PRIOR TO BACKFILLING. WELD 1/2" SQ. GALVANIZED METAL MESH INTO ALL OPEN ENDS OF PIPE.

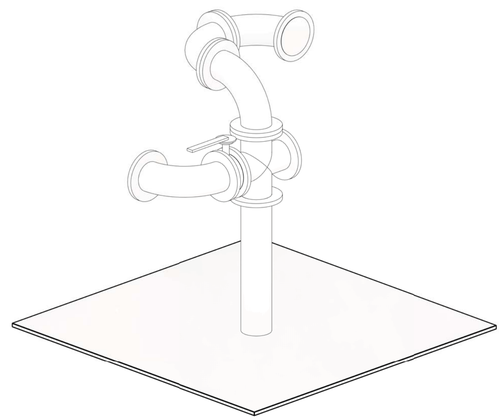

9 3D - PIPE PHONE 'B'

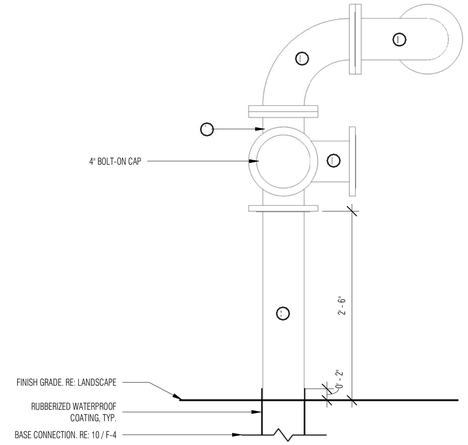

6 PIPE PHONE 'B' SIDE
1" = 1'-0"

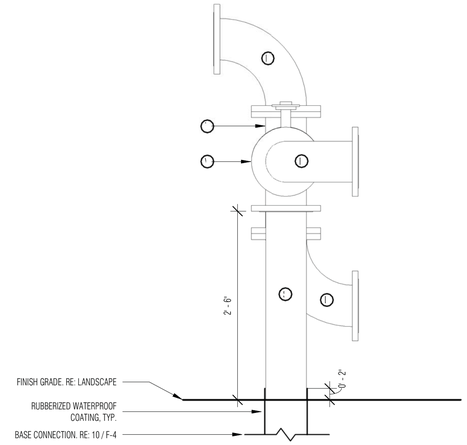

3 PIPE PHONE 'A' SIDE
1" = 1'-0"

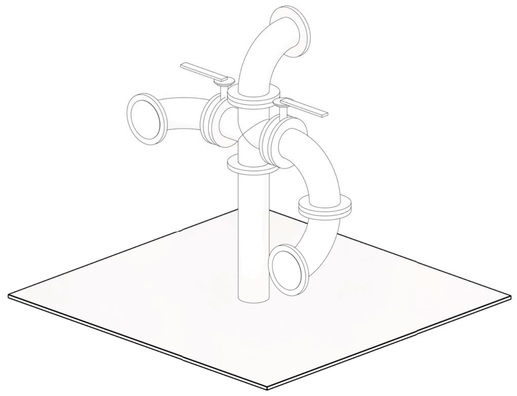

8 3D - PIPE PHONE 'A'

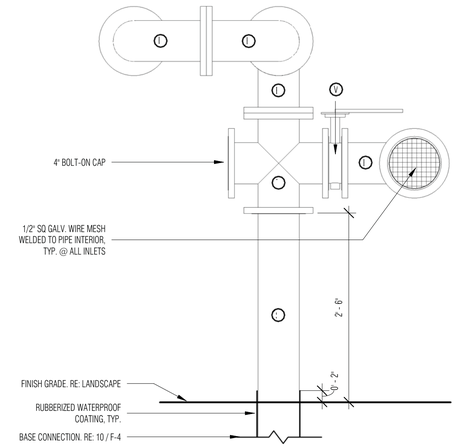

5 PIPE PHONE 'B' - FRONT
1" = 1'-0"

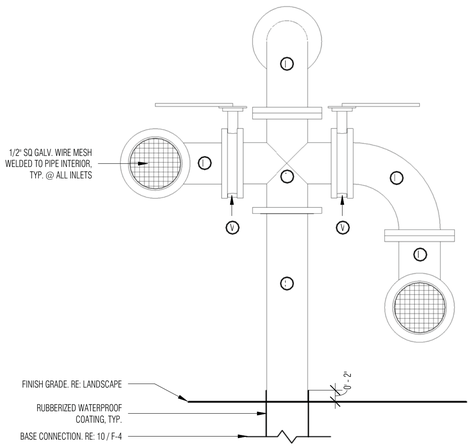

2 SIDE VIEW
1" = 1'-0"

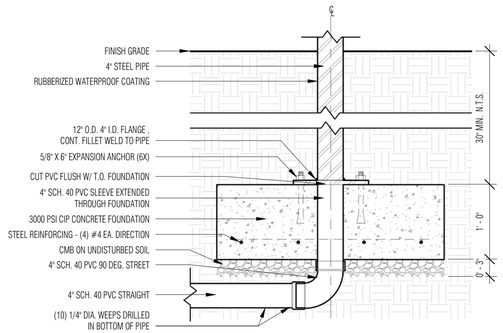

10 PIPE PHONE - FOUNDATION - SECTION
1" = 1'-0"

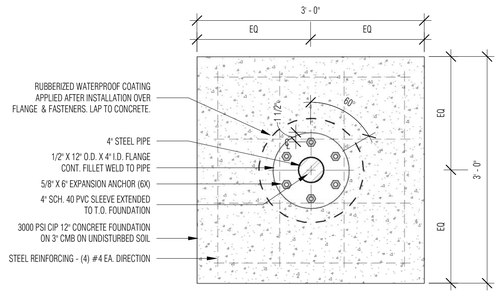

7 PIPE PHONE - FOUNDATION - PLAN
1" = 1'-0"

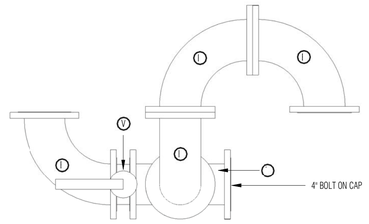

4 PIPE PHONE 'B' - TOP VIEW
1" = 1'-0"

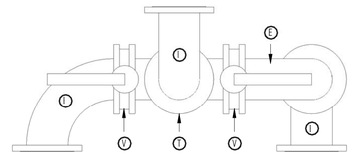

1 PIPE PHONE 'A' - TOP VIEW
1" = 1'-0"

w e n k

ASSOCIATES
PLANNERS & LANDSCAPE ARCHITECTS
303.628.0003

DENVER®
THE MILE HIGH CITY

RIVER NORTH PARK
DENVER, COLORADO

FOR AND ON BEHALF OF WENK ASSOCIATES
NOT VALID WITHOUT ORIGINAL SIGNATURE

KEY PLAN:

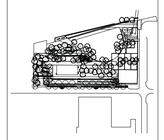

REVISIONS:
NAME DATE

DRAWN BY:
JR

REVIEWED BY:
MMM

PROJECT NUMBER:
15014

DATE:
OCTOBER 2018

ISSUE:
BID SET

SHEET TITLE:
PIPE PHONE

SHEET NUMBER:
F-4

NOTES

1. CIRCULAR GALVANIZED METAL DRAINAGE PIPE TO BE CONTECH BRAND CORRUGATED METAL PIPE OR APPROVED EQUAL.
2. DRILL WEEP DRAINS IN PIPE ISLANDS AS SPECIFIED IN DRAWINGS
3. RE: LANDSCAPE FOR PLACEMENT, SIZING AND FINISH ELEVATION OF PIPE ISLANDS AND ADDITIONAL FILL, GRADING, MATERIAL AND COMPACTION INFORMATION.
4. ALL WOOD IN CONTACT WITH OR BELOW FINISH GRADE TO BE TREATED WITH CCA AT MIN. 40 PCF
5. ALL STEEL IN CONTACT WITH OR BELOW FINISH GRADE TO BE GALVANIZED OR COATED WITH RUBBERIZED WATERPROOFING TO MIN 2" ABOVE FINISH GRADE.

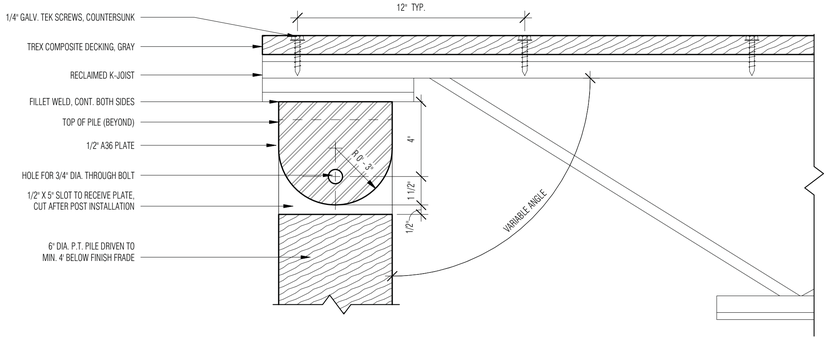

4 BALANCE BEAM - POST CONNECTION (SIDE)
3" = 1'-0"

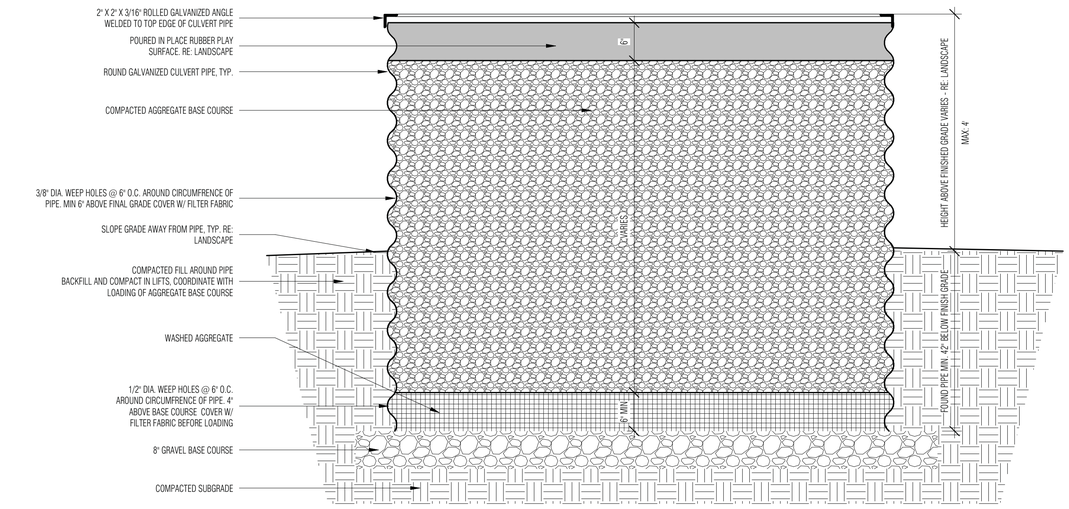

2 PIPE ISLAND - RUBBER SURFACE
1" = 1'-0"

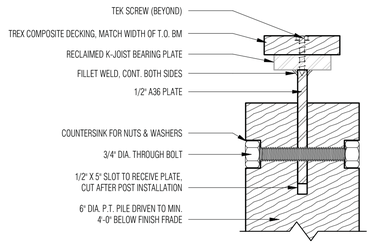

5 BALANCE BEAM - POST CONNECTION (END)
3" = 1'-0"

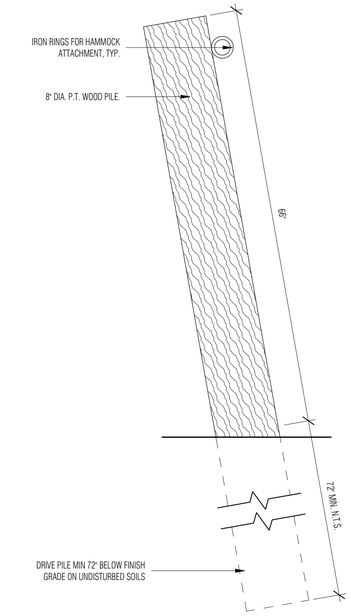

3 HAMMOCK HITCH - FRONT
1" = 1'-0"

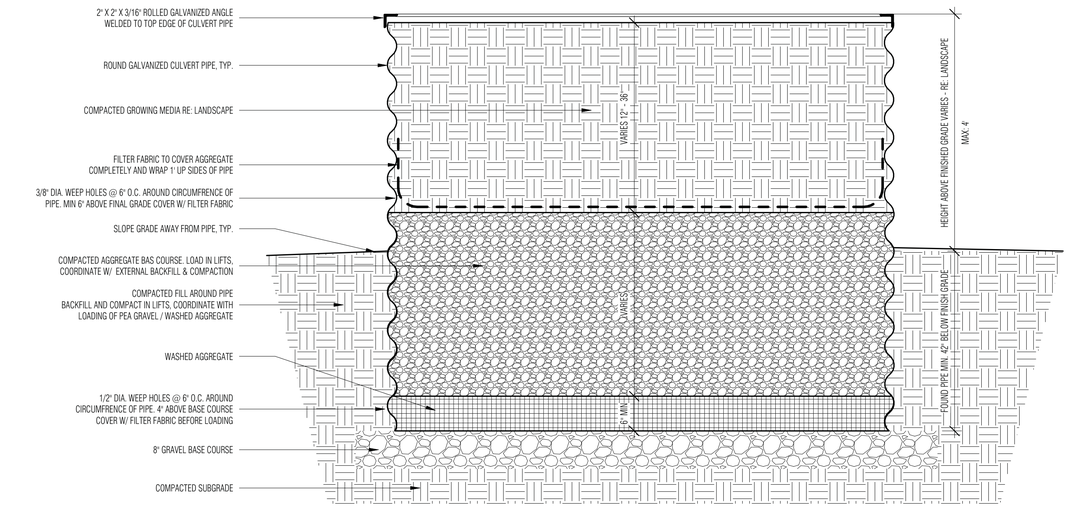

1 PIPE ISLAND - GROWING MEDIA
1" = 1'-0"

wenk

ASSOCIATES
PLANNERS & LANDSCAPE ARCHITECTS
303.628.0003

DENVER
THE MILE HIGH CITY

RIVER NORTH PARK
DENVER, COLORADO

FOR AND ON BEHALF OF WENK ASSOCIATES
NOT VALID WITHOUT ORIGINAL SIGNATURE

KEY PLAN:

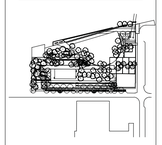

REVISIONS:
NAME DATE

DRAWN BY:
JR

REVIEWED BY:
MMM

PROJECT NUMBER:
15014

DATE:
OCTOBER 2018

ISSUE:
BID SET

SHEET TITLE:
SITE ELEMENTS

SHEET NUMBER:
F-5

NOTES

1. ALL STEEL IN CONTACT WITH OR BELOW FINISH GRADE (INCLUDING CONNECTIONS) TO BE COATED WITH RUBBERIZED WATERPROOFING TO MIN 2" ABOVE FINISH GRADE.
2. PROVIDE SHOP DRAWINGS TO ARCHITECT FOR APPROVAL PRIOR TO ORDERING MATERIALS OR FABRICATING COMPONENTS.
3. EARTH ANCHORS TO BE 14" 'PENETRATOR' BY AMERICAN EARTH ANCHORS, OR APPROVED EQUAL.

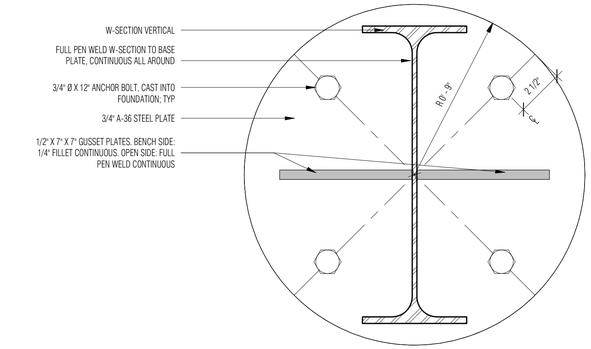

2 BASEPLATE - LANDMARK BENCH
3" = 1'-0"

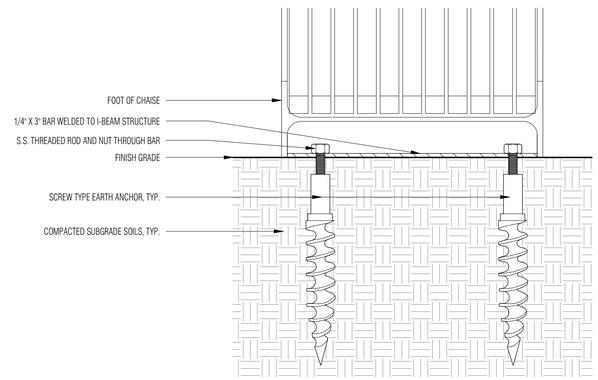

3 HOLD-DOWN DETAIL - I BEAM CHAISE
1 : 6

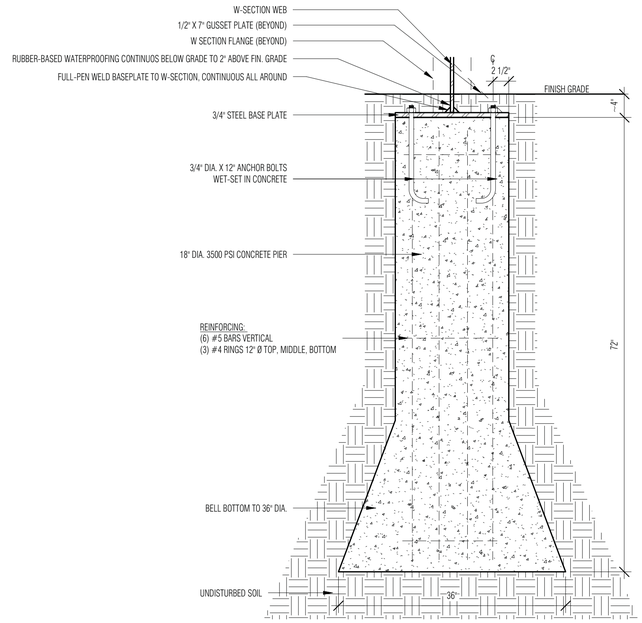

1 FOUNDATION - LANDMARK BENCH
1" = 1'-0"

wenk
ASSOCIATES
PLANNERS & LANDSCAPE ARCHITECTS
303.628.0003

DENVER
THE MILE HIGH CITY

RIVER NORTH PARK
DENVER, COLORADO

FOR AND ON BEHALF OF WENK ASSOCIATES
NOT VALID WITHOUT ORIGINAL SIGNATURE

KEY PLAN:

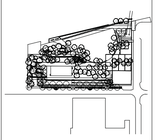

REVISIONS:
NAME DATE

DRAWN BY:
JR

REVIEWED BY:
MMM

PROJECT NUMBER:
15014

DATE:
OCTOBER 2018

ISSUE:
BID SET

SHEET TITLE:
DETAILS

SHEET NUMBER:
F-6

NOTE:
Metal Panel Infill To Be McNICHOLS® Quality Round Perforated, 18 Gauge Galvanized Steel, 1/4" Round on 3/8" Staggered, 48.0000" x 120.0000" or Slm.

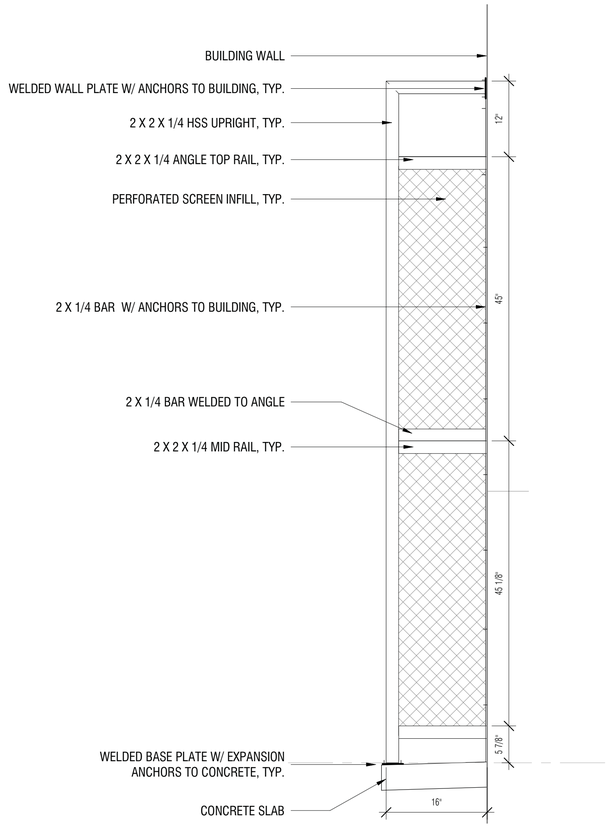

4 SIDE ELEVATION - INTERSTATE ELECTRICAL ENCLOSURE
SCALE: 1" = 1'-0"

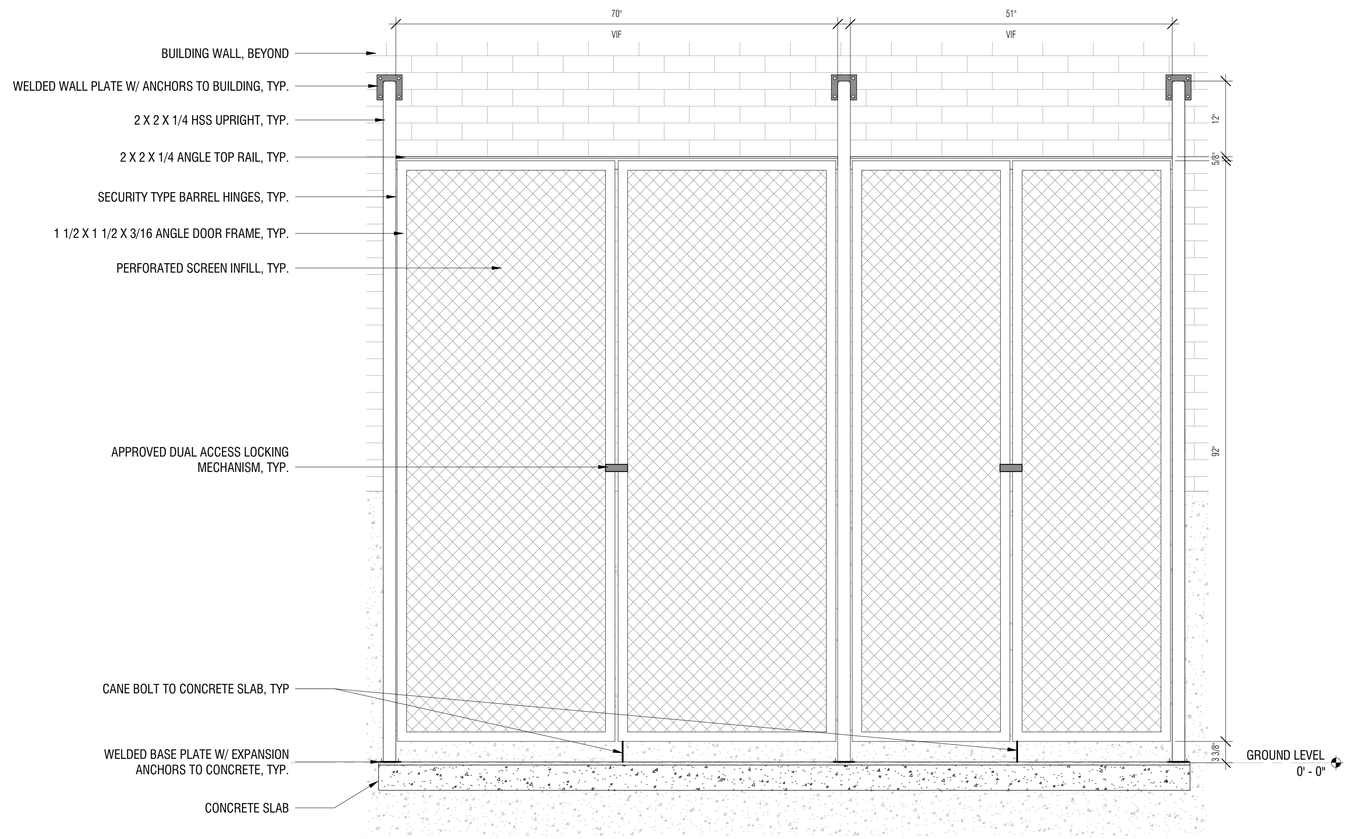

2 FRONT ELEVATION - INTERSTATE ELECTRICAL ENCLOSURE
SCALE: 1" = 1'-0"

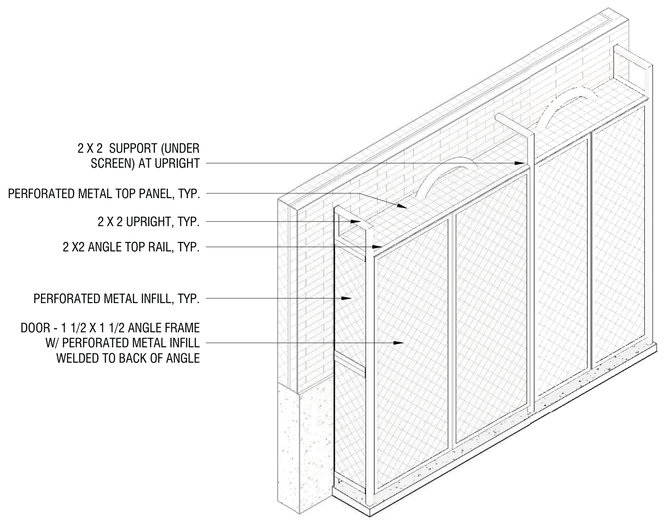

3 3D - INTERSTATE ELECTRICAL ENCLOSURE
SCALE:

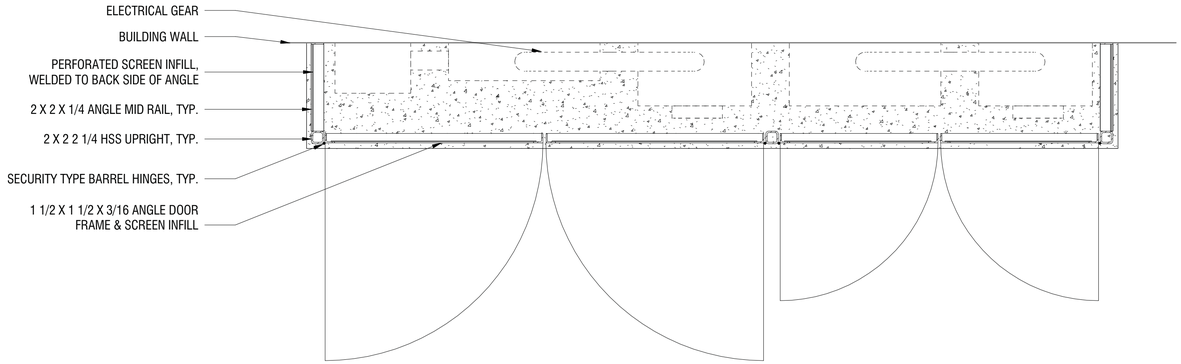

1 ENLARGED PLAN - INTERSTATE ELECTRICAL ENCLOSURE
SCALE: 1" = 1'-0"

wenk
ASSOCIATES
PLANNERS & LANDSCAPE ARCHITECTS
303.628.0003

DENVER
THE MILE HIGH CITY

RIVER NORTH PARK
DENVER, COLORADO

FOR AND ON BEHALF OF WENK ASSOCIATES
NOT VALID WITHOUT ORIGINAL SIGNATURE

KEY PLAN:

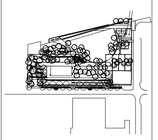

REVISIONS:
NAME DATE

DRAWN BY:
JR

REVIEWED BY:
MMM

PROJECT NUMBER:
15014

DATE:
OCTOBER 2018

ISSUE:
BID SET

SHEET TITLE:
ELECTRICAL ENCLOSURES

SHEET NUMBER:
F-7

NOTE:
Metal Panel Infill To Be McNICHOLS® Quality Round Perforated, 18 Gauge Galvanized Steel, 1/4" Round on 3/8" Staggered, 48.0000" x 120.0000" or Slm.

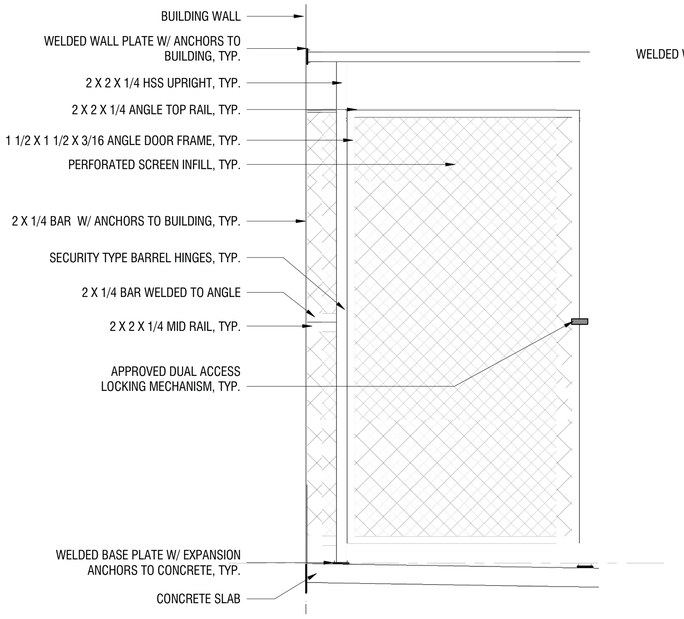

4 SIDE ELEVATION - EEB ELECTRICAL ENCLOSURE
SCALE: 3/4" = 1'-0"

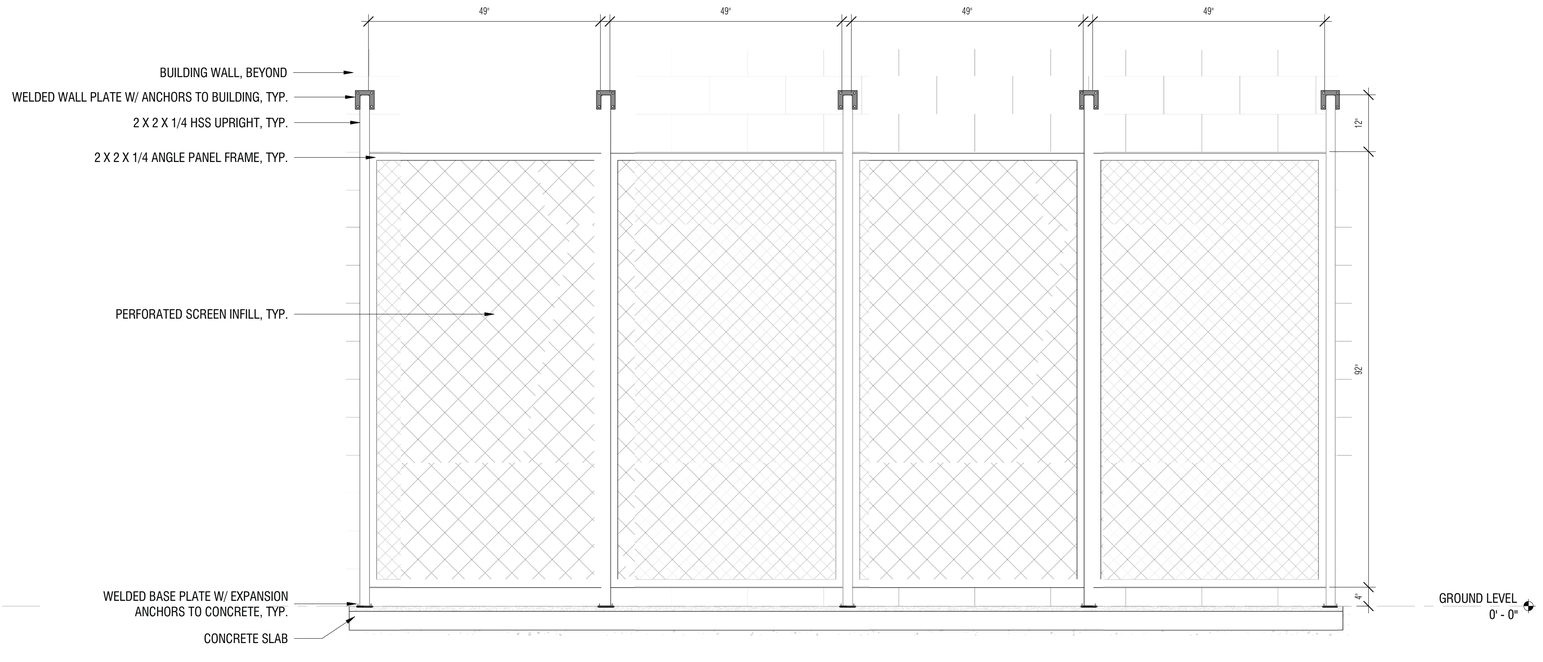

3 FRONT ELEVATION - EEB ELECTRICAL ENCLOSURE
SCALE: 3/4" = 1'-0"

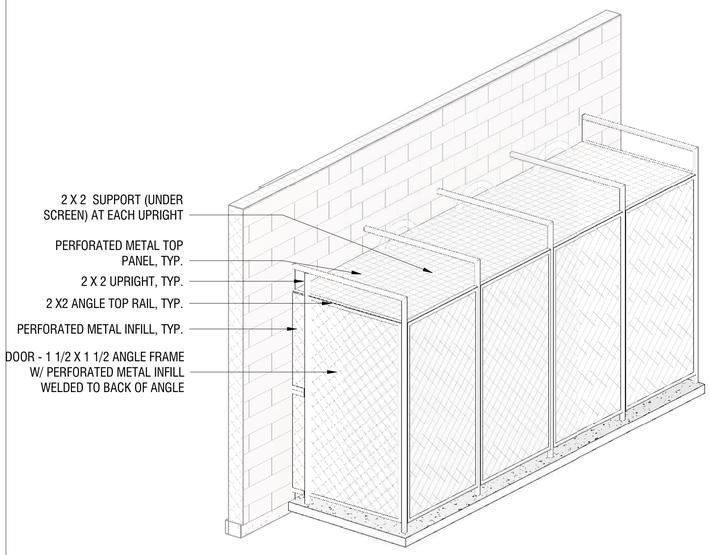

1 3D - EEB ELECTRICAL ENCLOSURE
SCALE:

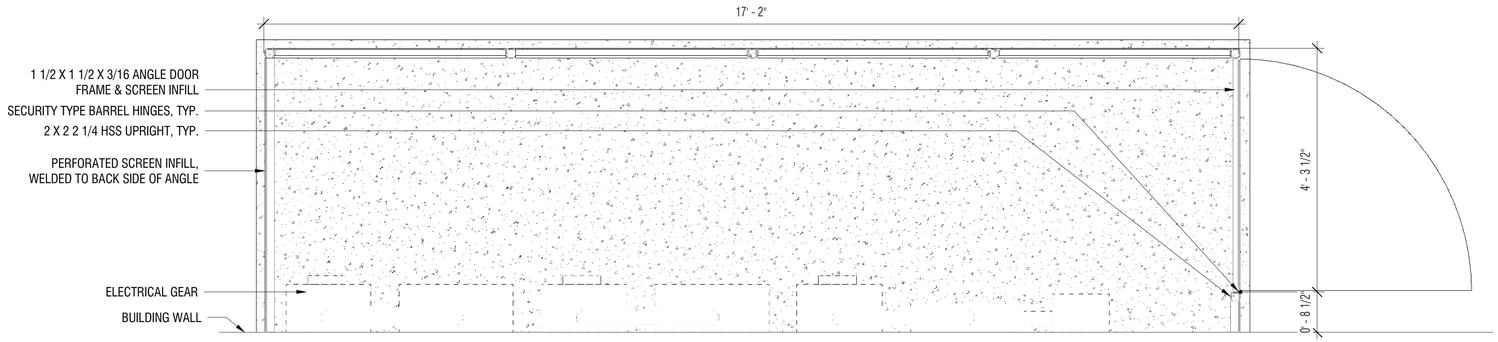

2 ENLARGED PLAN - EEB ELECTRICAL ENCLOSURE
SCALE: 3/4" = 1'-0"

wenk
ASSOCIATES
PLANNERS & LANDSCAPE ARCHITECTS
303.628.0003

DENVER
THE MILE HIGH CITY

RIVER NORTH PARK
DENVER, COLORADO

FOR AND ON BEHALF OF WENK ASSOCIATES
NOT VALID WITHOUT ORIGINAL SIGNATURE

KEY PLAN:

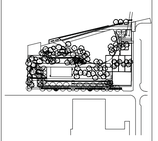

REVISIONS:
NAME DATE

DRAWN BY:
JR

REVIEWED BY:
MMM

PROJECT NUMBER:
15014

DATE:
OCTOBER 2018

ISSUE:
BID SET

SHEET TITLE:
ELECTRICAL ENCLOSURES

SHEET NUMBER:
F-8



CITY AND COUNTY OF DENVER
DEPARTMENT OF PUBLIC WORKS
Engineering Division

Festival Roadway Construction Project

Master Project Number: 2015- PROJMSTR -0000571

GENERAL CONTRACT CONDITIONS

General Contract Conditions shall be the City and County of Denver, Department of Public Works, "Standard Specifications for Construction General Contract Conditions", 2011 edition, and as hereinafter modified.

STANDARD CONSTRUCTION SPECIFICATIONS

Standard Construction Specifications shall be the Colorado Department of Transportation "Standard Specifications for Road and Bridge Construction", Sections 200-700, as adopted in 2017, and as hereinafter modified. Section 100 shall be used as needed to incorporate project special provisions and applicable standard special provisions for the control of materials and QA/QC requirements. Standard Special Provisions can be obtained from the CDOT website at:

https://www.codot.gov/business/designsupport/cdot-construction-specifications/2017-construction-standard-specs

DETAILED CONSTRUCTION SPECIFICATIONS

The Detailed Specifications for this project are defined in the City of Denver Contract Requirements and Contract Documents.

STANDARD CONSTRUCTION DETAILS

Applicable City and County of Denver standard details dated April 1, 2017 are required to be used by the Contractor. For other applicable details, except as modified or altered by the general notes on the plans to be approved or by the revisions to standard specifications and contract documents, it is the intent of the City to use the Colorado Department of Transportation M & S Standards, most recent edition. Drainage and sanitary related appurtenances shall be constructed as shown in the most recent edition of the City and County of Denver (City), Department of Public Works documents listed under Manuals and Regulations for Wastewater. These documents can be found at the following web address:

Manuals and Regulations for Wastewater

CONSTRUCTION LIMITS

The "construction limits" for the Site are defined as Festival Street from 35th Street south approximately 575 feet as shown in the plans. Festival is a new street. All work shall occur within the City and County of Denver right-of-way or easements. Impacts to existing buildings, landscaping, concrete, sidewalk, structures, sprinklers, curbs, gutters, etc. that occur beyond the right-of-way will be repaired by the Contractor at their own expense

The Site is adjacent to the RiNo Park project and the Great Divide property. Coordination with these adjacent projects and property owners will be needed during construction.

COLORADO
DEPARTMENT OF TRANSPORTATION
SPECIAL PROVISIONS
FESTIVAL ROADWAY CONSTRUCTION

PROJECT SPECIAL PROVISIONS

Name	Date	Pages
General Contract Conditions	(Oct 19, 2018)	ii
Index Pages	(Oct 19, 2018)	iii-v
Revision of Section 101 – Definition and Terms	(Oct 19, 2018)	1
Revision of Section 202 – Removal of Structures and Obstructions	(Oct 19, 2018)	2
Revision of Section 203 – Excavation and Embankment	(Oct 19, 2018)	4
Revision of Section 207 – Topsoil	(Oct 19, 2018)	6
Revision of Section 208 – Erosion Control	(Oct 19, 2018)	8
Revision of Section 209 – Watering and Dust Palliatives	(Oct 19, 2018)	22
Revision of Section 210 – Modify Manhole	(Oct 19, 2018)	22
Revision of Section 212 – Seeding (Native)	(Oct 19, 2018)	24
Revision of Section 250 – Environmental, Health and Safety	(Oct 19, 2018)	25
Revision of Section 304 – Aggregate Base Course	(Oct 19, 2018)	30
Revision of Section 401 and 403 – Plant Mix Pavements	(Oct 19, 2018)	31
Revision of Section 603 – Culverts and Sewers	(Oct 19, 2018)	34
Revision of Section 608 – Sidewalks	(Oct 19, 2018)	35
Revision of Section 609 – Curb and Gutter	(Oct 19, 2018)	37
Revision of Section 625 – Construction Surveying	(Oct 19, 2018)	39
Revision of Section 627 – Pavement Marking	(Oct 19, 2018)	42
Revision of Section 630 – Construction Zone Traffic Control	(Oct 19, 2018)	43
Utilities	(Oct 19, 2018)	46
Right of Way	(Oct 19, 2018)	51

Appendix A- Materials Management Plan
Appendix B -Predig Check List
Appendix C -Pavement Report

STANDARD SPECIAL PROVISIONS
FESTIVAL ROADWAY CONTRUCTION

Name	**Date**	**No. of Pages**
Revision of Section 250 – Environmental, Health and Safety Management	(July 3, 2017)	3
Revision of Section 401 – Plant Mix Pavements	(July 3, 2017)	1
Revision of Section 401 – Reclaimed Asphalt Pavement	(July 3, 2017)	2
Revision of Section 703 – Classification for Aggregate for Bases	(October 12, 2017)	1

REVISION OF SECTION 101
DEFINITION AND TERMS

Technical Specifications related to construction materials and methods for the work embraced under this Contract shall consist of the "Colorado Department of Transportation, Standard Specifications for Road and Bridge Construction" dated 2017, and as hereinafter modified, along with the City and County of Denver specifications, as indicated.

Certain terms utilized in the CDOT Specifications referred to in the paragraph above shall be interpreted to have different meanings within the scope of the Contract. A summary of redefinitions follows:

101.27 Department. City and County of Denver

101.28 Engineer. The City and County of Denver Project Manager or designated representative.

101.36 Laboratory. City and County of Denver or their designated representative.

101.47 Project Engineer. The Project Manager, City and County of Denver or designated representative.

101.70 State. City and County of Denver (where applicable)

END OF SECTION REVISION

REVISION OF SECTION 202
REMOVAL OF STRUCTURES AND OBSTRUCTIONS

Section 202 of the Standard Specifications is hereby revised for this project as follows:

Subsection 202.01 shall include the following:

Materials removed from this Project shall be recycled or reused in accordance with Special Conditions Section "Greenprint Denver Requirements". Final disposal of materials not recycled or reused is included in the work, and shall be disposed of at the Denver Arapahoe Disposal Site (DADS), 3500 South Gun Club Road, Aurora, Colorado. No disposal fees will be paid to the Contractor for any materials of any nature that the Contractor disposes of at the Denver-Arapahoe Disposal Site ("DADS"). Disposal fees at DADS will be paid by the City directly to DADS. This Work shall be done in strict accordance with all of the Special Contract Conditions

After removal, the exposed subgrade surface shall be finished to a smooth and uniform surface conforming to the typical approved plan specified grade.

All references to curb and gutter shall be construed to include concrete curb and gutter, asphalt mat overlying concrete gutter pan, concrete gutter pan, granite-block curb, and stone curb.

This work will include removal and disposal of sewer stone inlets, manholes, pipe, and curb and gutter as required.

Subsection 202.02 shall include the following:

The Contractor shall mark the limits of removals in the field and shall arrange for same to be verified by the Project Manager or his representative. Removed materials shall be recycled or reused where possible. Final disposal of remaining materials will be made at DADS.

Removed concrete and asphalt material may not be used to construct embankments.

Storm drain inlet protection devices shall be installed prior to the commencement of removal activities.

Subsection 202.03 shall be deleted and replaced with the following:

All materials, as shown on the plans to be salvaged, shall be removed, without unnecessary damage, in sections or pieces that may be readily transported, and delivered by the Contractor to the location noted on the plans, or as directed by the Project Manager. The Contractor shall be held responsible for the safekeeping of all salvable materials during the period of the Contract until they are delivered to the City. The Contractor shall make good or replace at his own expense any such materials damaged, stolen or otherwise lost prior to receipt by the City. All salvable materials, as designated on the plans, shall remain the property of the City.

Subsection 202.05 shall include the following:

Pavement marking used for temporary traffic control on pavement to remain shall be removed in a manner that does not damage the pavement surface. Sandblasting, grinding, or hydro blasting will not be allowed.

-2-

REVISION OF SECTION 202
REMOVAL OF STRUCTURES AND OBSTRUCTIONS

Subsection 202.07 shall be deleted and replaced with the following:

All concrete pavement, sidewalks, structures, curbs, gutters, asphalt pavement, etc., designated for removal, shall be broken into pieces and recycled, or disposed of outside the limits of the project, unless otherwise designated on the plans, or as directed by the Engineer.

Old concrete construction which abuts new construction, edges of pavement, sidewalks, curbs, etc., to be left in place shall be saw cut to true line with a vertical face.

Where old asphalt construction abuts new construction, edges of asphalt pavement, patching, etc., asphalt to be left in place shall be wheel cut or saw cut to a neat vertical face with minimal jagged edges to the satisfaction of the Project Manager. The Project Manager, at his discretion, may require asphalt to be saw cut.

Subsection 202.11 shall include the following:

Removal of asphalt mat, concrete paving, sidewalks, and parking areas will be measured by the area in square yards, regardless of thickness.

Subsection 202.12 shall be deleted and replaced with the following:

The accepted quantities will be paid for at the contract unit price for each of the pay items listed below that appear in the bid schedule. Payment shall be full compensation for saw cutting, scraping, sandblasting, removing, hauling, plugging and disposal of such items, excavation and subsequent backfill (with moisture/density control per the Revision of Subsection 203.07) to proposed subgrade elevation. The price shall also include salvageable materials removed, their custody, preservation, storage, haul and disposal as provided herein.

Payment for the removal of items that are identified to be recycled on Greenprint Denver Sustainability and Closeout Form will not be made until the Contractor provides load tickets to the Project Manager for those items.

Payment will be made under:

Pay Item	**Pay Unit**
Removal of Sidewalk	Square Yard
Removal of Concrete Pavement	Square Yard
Removal of Curb and Gutter	Linear Foot
Removal of Asphalt Mat	Square Yard
Removal of Fence	Linear Foot

When the Contract does not include a specific pay item for a removal, the removal will not be paid for separately but shall be included in the cost of the work.

END OF SECTION REVISION

REVISION OF SECTION 203
EXCAVATION AND EMBANKMENT

Section 203 of the Standard Specifications is hereby revised for this project as follows:

Subsection 203.01 shall be revised to include the following:

Disposal of materials not recycled or reused will be made to DADS and shall be part of this contract.

Fencing shall be erected around all excavations greater than 4 feet deep to preclude public access when unattended.

In subsection 203.03(a), first paragraph, after the second sentence add the following:

Imported soils (if required) should be granular soils with no more than 35 percent passing the No. 200 sieve and having a Liquid Limit of no more than 30, a Plasticity Index of no more than 15 and a minimum R-value of 14. Import fill material should be reviewed by the geotechnical engineer prior to importing to the site.

Engineered fill should be placed and compacted in horizontal lifts, using equipment and procedures that will produce a uniform fill with the recommended moisture contents and densities throughout the lift. Recommended compaction criteria for engineered fill shall be in accordance with Section 203.07 of CDOT Standard Specification.

Subsection 203.04 shall include the following:

The Contractor shall protect and promptly dewater and recondition all excavations from water regardless of source.

Subsection 203.05 (c), first paragraph, shall include the following:

Approved backfill material shall be Aggregate Base Course (Class 6) or other material approved by the Engineer.

Subsection 203.07 shall include the following:

Unless otherwise indicated on the plans, the density requirements for embankment material shall be 95% of the maximum density determined in accordance with AASHTO T-180.

REVISION OF SECTION 203
EXCAVATION AND EMBANKMENT

Subsection 203.08, first paragraph, shall include the following:

Proof Rolling. Proof rolling of the subgrade shall be required. Proof rolling shall be done after specified compaction has been obtained. Proof rolling shall be conducted with a double tandem ten wheel end-dump truck, loaded to a minimum gross weight of 45,000 pounds, or other equipment as approved by the Engineer. Areas found to be weak and those areas which failed shall be ripped, scarified, dried or wetted as necessary and recompacted to the requirements for density and moisture at the Contractor's expense. Where unsuitable material is encountered below proposed subgrade, the Engineer may require the Contractor to remove the unsuitable materials as muck excavation and backfill to the finished grade with Class 6 aggregate base course, or other approved material. The Engineer may designate as unsuitable those soils that are detrimental to the finished roadway. All unsuitable material shall be disposed of as directed.

The Engineer may designate as unsuitable those soils that are detrimental to the finished roadway. All unsuitable material shall be disposed of as directed.

Subsection 203.12 shall include the following:

Unclassified excavation, as designated by the Engineer, will be measured in the field.

Subsection 203.13 (d) shall be deleted and replaced with the following:

Proof rolling, compaction, blading, wetting, drying, and dozing, will not be measured and paid for separately, but shall be included in the cost of the work.

Subsection 203.13 shall include the following:

Haul and disposal will not be measured and paid for separately but shall be included in the cost of the work.

Subsection 203.14 shall include the following:

Payment will be made under:

Pay Item	**Pay Unit**
Unclassified Excavation	Cubic Yard
Embankment Material	Cubic Yard

Proof Rolling will not be paid for separately but shall be included in the work.

END OF SECTION REVISION

REVISION OF SECTION 207
TOPSOIL

Section 207 of the Standard Specifications is hereby revised for this project to include the following:

Section 207.01 shall include the following:

This work shall also consist of incorporating fertilizer and an organic amendment into the top 6 inches of existing suitable soil to be seeded and planted and imported topsoil as need should the available soil on site not be sufficient or suitable.

Section 207.02 shall include the following:

Imported topsoil shall be A1 Organics Amended Topsoil or approved equal.

Soil amendments shall be A1 Organics Premium 3 Compost or approved equal. Amendment to be tilled into seeding lawn and tree and shrub planting areas shall include:

A. 3 cubic yards organic amendment per 1000 square feet
B. 5 lbs Diammonium phoshate 18-46-0 per 1000 square feet

The organic amendment shall include the following:

A1 Premium 3 Organic Compost, or equal to be aged organic matter, meeting the following minimum requirements:

A. Minimum Requirements:
1. Organic matter: 45% minimum.
2. Salt content: 4.0 mmhos/cm maximum.
3. pH range: 4.3 to 7.5.

B. Organic material may be:
1. Aged sawdust or other nitrogen treated, decomposing wood products
2. Dried, pulverized poultry manure
3. Humus
4. Compost
5. Aged, treated, pulverized manure
6. Treated sewage sludge
7. Other organic material as approved by the Project Manager

The Contractor shall submit a ½ pound sample of the product along with a recent (last 30 days maximum) laboratory analysis, four weeks before its use on the project site for the Engineer's approval. A Certificate of Compliance shall be provided to the Engineer to verify the organic matter content, pH and carbon matter to nitrogen ratio. Contractor shall also provide ½ pound sample of supplied material to ensure it conforms with this specification as well as previously submitted material.

-2-

REVISION OF SECTION 207
TOPSOIL

Section 207.05 shall include the following:

Payment will be made under:

Pay Item	**Pay Unit**
Topsoil	Cubic Yard

END OF SECTION REVISION

REVISION OF SECTION 208
EROSION CONTROL

Section 208 of the Standard Construction Specifications is hereby removed in its entirety and replaced with the following:

PART I: DEFINITIONS

Definitions used for this Section shall consist of those listed in Title 1 of the City and County of Denver "Standard Specifications for Construction, General Contract Conditions", 2011 edition.

Definitions used for this Section hereby incorporate those identified within the City and County of Denver Construction Activities Stormwater Manual (CASM**)**.

Additional Definitions applicable to this Section are listed heretofore:

Basis of Payment: The terms under which "Work" is paid, as a designated "Pay Item" in accordance with the quantity measured and the "Pay Unit."

Best Management Practices (BMPs): Schedules of activities, prohibitions of practices, installation of devices, maintenance procedures, and other management practices deployed to stabilize the construction site to prevent or reduce the pollution of State Waters (see definition below). Stormwater BMPs can be classified as "structural" (i.e., devices installed or constructed on a site) or "non-structural" (procedures, such as modified landscaping practices).

Colorado Department of Health and Environment (CDPHE): State of Colorado, Water Quality Control Division responsible for issuance of State Construction Stormwater Permit.

Construction Activities Stormwater Discharge Permit (CASDP): Permit issued by the City for compliance with City & County of Denver Revised Municipal Code and Department of Public Works Rules & Regulations concerning the discharge of pollutants in storm generated runoff from construction sites to Municipal Separate Storm Sewer System (MS4, see definition below) or State Waters, via the Municipal Separate Storm Sewer System (MS4).

Construction Activities Stormwater Manual (CASM): City and County of Denver Construction Activities Stormwater Manual (CASM), 2010 edition.

Colorado Department of Transportation (CDOT): State agency that has published standards for Erosion Control with accompanying Erosion Control Supervisor certification courses.

Erosion Control Supervisor (ECS): The Erosion Control Supervisor is assigned by the Contractor to perform duties as described in this Section. The ECS shall be properly trained in BMPs per requirements of Part V below, and shall be under the direction of a Professional Engineer licensed in the State of Colorado when performing any modifications to the Project Stormwater Management Plan (SWMP).

Final Stabilization: Point of construction when all ground surface disturbing activities at the site have been completed and uniform vegetative cover has reached 70% of pre-disturbance vegetative cover, or equivalent permanent features have been employed. At this point, all temporary BMPs can be removed, all construction and equipment maintenance wastes have been disposed of properly; and all elements of the Stormwater Management Plan have been completed.

-2-
REVISION OF SECTION 208
EROSION CONTROL

Major SWMP Modification: Changes to the original SWMP that removes or adds additional area to the Project, or modifies the final hydrology or drainage of the Project. A Major SWMP Modification requires the submission of revised Stormwater Management Plan (SWMP) elements to the Permit Authority for review and approval. Any adjustments to a SWMP must be performed either by or under the direction of a Professional Engineer licensed in the State of Colorado.

Minor SWMP Modification: Modification to the SWMP that does NOT increase the scope or change hydrology of the Project but: modifies/improves specific BMPs in use at site, indicates progression in phasing of the Project, or specifies relocation of previously approved BMPs within the Project. Any adjustments to a SWMP must be performed either by or under the direction of a Professional Engineer licensed in the State of Colorado.

Municipal Separate Storm Sewer System (MS4): A conveyance or system of conveyances (including roads with drainage systems, municipal streets, catch basins, curbs, gutters, ditches, man-made channels, or storm drains):

a) owned or operated by a State, city, town, county, district, association, or other public body (created by or pursuant to State law) having jurisdiction over disposal of stormwater or other wastes, including special districts under State law such as a sewer district, flood control district or drainage district, or similar entity, or a designated and approved management agency under Section 208 of the Federal Clean Water Act that discharges to State Waters;
b) designed or used for collecting or conveying stormwater;
c) which is not a combined sewer; and
d) which is not part of a Publicly Owned Treatment Works (POTW).

Permit Authority: The Department authorized by the City to review and process CASDP Applications for Capital and/ or governmental sponsored Projects. The responsible City department serving as the Permit Authority is the Public Works Project Controls Office. As a clarification, the Development Services Department of the City serves as the point of intake and permit processing center.

Permit Enforcement Authority: The Department authorized by the City to inspect and enforce CASDP Rules and Conditions for all construction Projects within the City's MS4 Boundary. The responsible City department serving as the Permit Enforcement Authority is the Wastewater Management Division of the Department of Public Works.

State Construction Stormwater Permit: Colorado Revised Statues require that all construction sites/development Projects, which, by definition, disturb one or more acres in area, shall be covered by a State issued general permit for construction activities. Information on the application requirements for the State permit can be obtained by phone at 303-692-3500; or by visiting their offices located at 4300 Cherry Creek Drive South, Denver, CO 80246 – 1530. or on the Web at: www.cdphe.state.co.us

State Waters: Any and all surface waters which are contained in or flow in or through this State, not to include waters in sewage systems, waters in treatment works of disposal systems, waters in potable water distribution systems, and all water withdrawn for use until use and treatment have been completed.

-3-
REVISION OF SECTION 208
EROSION CONTROL

Examples of State Waters include, but are not limited to, perennial streams, intermittent or ephemeral gulches and arroyos, ponds, lakes, reservoirs, irrigation canals or ditches, wetlands, stormwater conveyances (when they discharge to a surface water), and groundwater.

Stormwater Management Plan (SWMP): The Stormwater Management Plan contains the requirements necessary to accomplish all the following:

The SWMP establishes a minimum standard to construct, install, maintain, and remove required BMPs during the life of the Contract to prevent or minimize pollution of stormwater due to erosion, sediment transport, and construction related pollutant generated during all phases of the Project. A SWMP consists of the following elements:

(i) CASDP Narrative Worksheet with Narrative Report. The Narrative Report and supporting documents should fully address the methods to be used to prevent sediment, debris, and other pollutants from entering the MS4 and/ or State Waters in and around the Project area. Proposed structural and non-structural BMPs should be described with sufficient implementation detail to insure that the logical phases of the proposed construction Project meet the performance standards listed in the CASM.

(ii) Proposed site drawings and Best Management Practice (BMP) installation details as they apply to the site conforming to the Urban Storm Drainage Criteria Manual, Vol. 3, "Best Management Practices", most current version as issued by the Urban Drainage and Flood Control District (UDFCD), or those established by the City's Department of Public Works. If erosion control drawings were included within the bid documents for the Project, they shall be used for bid purposes and initial planning/ deployment of BMPs on the Project. If provided drawings are signed/ sealed by a Professional Engineer, they have been pre-approved by the Permit Authority and may be used without revision for purposes of submitting for CASDP. If provided drawings do not have signature/ seal of Professional Engineer licensed by the State of Colorado, they will require revision by the Contractor with Professional Engineer signature/ seal prior to submission to the City and County of Denver for CASDP.

(iii) Supporting documentation related to proposed BMPs that are not currently identified in UDFCD Vol. 3 or as otherwise published by the City.

Any preparation of or adjustments to a SWMP must be performed either by or under the supervision of a Professional Engineer licensed in the State of Colorado. SWMP elements submitted to the City shall also meet currently established criteria of the CDPHE as the SWMP must meet all local, State and Federal requirements.

Substantial Completion of Erosion Control: Point of construction when permanent BMPs have been installed, initial growth is in place, and the site is waiting for vegetative cover to reach 70% of pre-disturbance vegetative cover.

-4-
REVISION OF SECTION 208
EROSION CONTROL

PART II: DESCRIPTION

This Work shall consist of constructing, installing, maintaining, and removing when required, BMPs during the life of the Contract until Final Stabilization to prevent or minimize erosion, sedimentation, and pollution of any waters including storm, drainageways, MS4, State Waters, and/ or wetlands. Work under this Section includes the Contractor obtaining required Permits, utilizing SWMP elements provided in the Contract, and/ or SWMP elements specifically prepared by the Contractor as defined herein. The work shall also consist of providing on-going maintenance and monitoring of the SWMP as may be necessary due to the specific and/or dynamic needs of the Project as well as meet all requirements set forth within the CASM.

The Contractor shall coordinate the construction of temporary BMPs with the construction of permanent BMPs to assure economical, effective, and continuous erosion and sediment control and water pollution prevention throughout the construction period until Final Stabilization is achieved

When a provision of this Section or an order by the Permit Enforcement Authority requires that an action be immediate or taken immediately, it shall be understood that the Contractor shall at once begin effecting completion of the action and pursue it to completion in a manner acceptable to the Permit Enforcement Authority, and in accordance with applicable Permitting requirements.

PART III: MATERIALS

Materials to be used for BMPs shall conform to each specific detail as set forth within the Project SWMP or as noted on the Contract Drawings.

-5-
REVISION OF SECTION 208
EROSION CONTROL

PART IV: EROSION CONTROL PERMIT STATUS

The current SWMP status for the Project is as follows:

The contractor is responsible to prepare the SWMP and obtain CASDP. A SWMP has been provided within the Bid Documents for information only. This SWMP has been reviewed by the City and County of Denver, but should not be considered accepted. The Contractor shall coordinate the CASDP prior to the start of construction.
1
The Contractor is responsible to perform the following:

(i) Complete all Sections of the CASDP "Narrative Report Information Worksheet".
(ii) Prepare a complete SWMP including any required adjustments for proposed construction phasing, staging areas, or additional items necessary to address applicable project specific Permit requirements. This will require the Contractor to provide or retain a Professional Engineer or subcontract with the original Professional Engineer that prepared the Bid Documents.
(iii) Include specific methods and/or BMPs that the Contractor will implement to address hazardous spill prevention/ containment response.
(iv) Provide any "Additional Documentation and Correspondence" applicable to the Contractor as stated in the CASM. This will require the Contractor to provide or retain a Professional Engineer or subcontract with the original Professional Engineer that prepared the Bid Documents.

If deemed necessary, the Contractor may propose modifications to the SWMP provided for information. Per CASDP requirements, the Contractor shall obtain the endorsement of a Professional Engineer licensed in the State of Colorado for any proposed Major or Minor SWMP Amendments. This may require the Contractor to provide or retain a Professional Engineer or subcontract with the original Professional Engineer of the "For reference only" erosion control drawings.

Per definition, a Major SWMP Modification requires the submission of revised SWMP elements to the Permit Authority for review and approval.

Prior to construction, the Contractor shall obtain the required State Construction Stormwater Permit(s) as applicable.

-6-
REVISION OF SECTION 208
EROSION CONTROL

PART V: CONSTRUCTION REQUIREMENTS

A) SCHEDULES:
At least 10 working days prior to the beginning of any construction work, the Contractor shall submit for approval a schedule for accomplishment of temporary and permanent BMPs shown in the SWMP. This schedule shall specifically indicate the sequence of clearing and grubbing, earthwork operations, and construction of temporary and permanent BMPs. The schedule shall include BMPs for all areas within the Project boundaries, including but not limited to, haul roads, borrow pits, and storage and other staging sites. Work shall not be started until the BMP schedule has been approved in writing by the Project Manager. Once the work has started, and during the active construction period, the Contractor shall update the schedule for all BMPs on a regular basis, and as required to keep the SWMP in compliance.

B) CONSTRUCTION IMPLEMENTATION: The Contractor shall incorporate into the Project all BMPs as outlined in the accepted schedule.

C) UNFORSEEN CONDITIONS: The Contractor shall direct the ECS (under the supervision of a Professional Engineer licensed in the State of Colorado) to design and implement BMPs for correcting conditions unforeseen during design of the Project, or as possible for emergency situations, which arise during construction. The Project's SWMP, UDFCD Vol 3 standards and details, and CDOTs "Erosion Control and Storm-Water Quality Guide," and any approved modification to these documents as proposed by the Contractor, shall be used as reference documents for the purpose of designing appropriate BMPs. Measures and methods proposed by the Contractor to deal with unforeseen conditions shall be reviewed and approved in writing by the Permit Enforcement Authority and the Project Manager prior to implementation and construction.

In an emergency situation, the Contractor shall use best judgment for immediately responding to the emergency situation as it arises, and shall notify the Permit Enforcement Authority and ECS of the emergency situation and BMPs employed in response as soon as practical after installation.

D) PERMITS:
The Contractor shall obtain all required permits for the Project including those required by federal, state, and local agencies. The Contractor shall obtain required erosion control and water quality permits and shall be responsible for compliance with all requirements under any such permits.

E) EROSION CONTROL SUPERVISOR:
Contractor shall assign to the Project an employee or subcontractor to serve as Erosion Control Supervisor (ECS). The ECS shall be a person other than the Contractor's superintendent, foreman, or equivalent supervisory position. The ECS shall be experienced in aspects of BMP construction and have satisfactorily completed a Colorado DOT or equivalent ECS training program authorized by the City. Proof that this requirement has been met shall be submitted to the Project Manager at least ten working days prior to the beginning of any soil disturbance work. A list of authorized ECS training programs is available from the City upon request. Additionally, per definition, the ECS shall be under the direction of a Professional Engineer licensed in the State of Colorado when performing any modifications to the Project Stormwater Management Plan (SWMP).

-7-
REVISION OF SECTION 208
EROSION CONTROL

The ECS shall be responsible for oversight of the implementation, maintenance, and revision of the SWMP for the duration of the Project. The ECS's responsibilities shall be as follows:

1) Ensure compliance with all water quality permits or certifications in effect during the construction work.
2) Supervise the installation, construction, and maintenance of all BMPs specified in the Contract and coordinate the construction of BMPs with all other construction operations.
3) Direct the implementation of suitable BMPs as necessary to correct unforeseen conditions or emergency situations. Direct the dismantling of those features when their purpose has been fulfilled due to completion of each Project phase unless the Permit Enforcement Authority agrees that the features be left in place.
4) Inspect the construction site and document inspection activities at least every seven (7) days and immediately following any precipitation or snowmelt event with the potential to cause surface erosion. If no land disturbing construction activities are present during a storm event, post-storm event inspections shall be conducted prior to commencing any new land disturbing construction activities, but no later than seventy-two (72) hours following the storm event.
5) Attend the preconstruction conference, erosion control preconstruction inspection, Project scheduling meetings, weekly construction/ field meetings, substantial completion and final stabilization inspections, and other meetings regarding construction that could impact water quality.
6) Evaluate all non-stormwater coming onto the site, such as springs, seeps, and landscape irrigation return flow. If such flow is identified, the ECS shall propose appropriate SWMP modifications to the Contractor to protect off-site water from becoming contaminated with sediment or other pollutants.
7) Coordinate with the Contractor to implement necessary actions to reduce anticipated or presently existing water quality or erosion problems resulting from construction activities.
8) Coordinate with the Contractor to ensure all labor, material, and equipment deployed to meet SWMP requirements is judged appropriately.
9) During construction, update and record the following items in the SWMP as changes occur:
   (i) Construction boundaries (may require Major SWMP Modification)
   (ii) Areas of disturbance (may require Major SWMP Modification)
   (iii) Areas used for storage of construction materials, equipment, soils, or wastes.
   (iv) Location of any dedicated asphalt or concrete batch plants.
   (v) Location of construction offices and staging areas.
   (vi) Location of work access routes during construction.
   (vii) Location of borrow and waste.
   (viii) Location of temporary and permanent stabilization

The ECS shall start a new site map before the current one becomes illegible. All site maps shall remain with the SWMP paperwork.
10) Amend the SWMP whenever there are: additions, deletions, or changes in locations of BMPs. SWMP revisions shall be recorded immediately. Items shall be dated and signed at time of occurrence. Specifically, amendments shall include the following:
   (i) A change in design, construction, operation, or maintenance of the site which would require the implementation of new or revised BMPs; or

-8-
REVISION OF SECTION 208
EROSION CONTROL

(ii) Changes when the SWMP proves to be ineffective in achieving the general objectives of controlling pollutants in stormwater discharges associated with construction activity.

(iii) Changes when temporary BMPs are no longer necessary from changes in Project phase and are removed. All inspection and maintenance activities or other repairs shall be documented.

All inspection and maintenance activities or other repairs shall be documented. The SWMP and documentation shall be kept on the Project site at all times.

11) Modify the site map with arrows to indicate direction of surface and storm water flowing across the Project site.

12) When adding or revising BMPs in the SWMP, amend the narrative to explain what, when, where, why, and how the BMP is being used, and add a detail to the SWMP.

13) If using existing topography, vegetation, etc. as a BMP, label it as such in the SWMP site map; amend the Narrative to explain when, why, and how the BMP is being used to the SWMP.

14) Record on the SWMP, and implement the approved plan for concrete and asphalt saw cutting, grinding, and milling containment and removal.

15) Update the potential pollutants list in the SWMP throughout construction meeting CASDP requirements.

16) Spills, leaks, or overflows that result in the discharge of pollutants shall be documented on the inspection form. The ECS shall record the time and date, weather conditions, reasons for spill, and how it was remediated. The ECS shall immediately report to the Contractor and Project Manager the following instances of noncompliance:

(i) Noncompliance which may endanger health or environment.

(ii) Spills or discharge of hazardous substance or oil which may cause pollution of the City MS4 or State Waters.

(iii) Discharge of stormwater which may cause an exceedance of a water quality standard.

17) Perform a thorough inspection of the stormwater management system at least every seven (7) days and within 24 hours after any precipitation or snowmelt event with the potential to cause surface erosion. The inspection records shall be kept on-site in a written or previously approved format. Inspections shall be conducted during the progress of the work, during work suspensions, or until Final Stabilization of all disturbed areas is approved by Permit Enforcement Authority and shall include the following services at a minimum:

(i) The construction site perimeter, disturbed areas, and areas used for material storage that are exposed to precipitation shall be inspected for evidence of, or the potential for, pollutants entering the drainage system. BMPs identified in the SWMP shall be observed to ensure that they are operating correctly.

(ii) The description of potential pollutant sources, and the BMPs identified in the SWMP, shall be revised and modified as appropriate based on the results of the inspection as soon as practicable after such inspection. Modification to the SWMP shall be implemented in a timely manner and in accordance with applicable Permit requirements.

(iii) The operator shall keep a record of inspections. Uncontrolled releases of sediment or polluted storm water or measurable quantities of sediment found off the site shall be recorded with a brief explanation as to the measures taken to prevent future releases as well as any measures taken to clean up the sediment that has left the

-9-
REVISION OF SECTION 208
EROSION CONTROL

(iv) site. Inspection records shall be made available to the City upon request. Note: documentation of uncontrolled releases at site DOES NOT alleviate any State or Federal requirements for reporting of discharges or upset conditions. Care should be taken to ensure compliance with all regulatory requirements at site.

(v) Seven (7) day inspections are required during construction and at all times until Final Stabilization has been achieved. Seeding and mulching of disturbed areas does NOT count as final stabilization until such time as 70% pre disturbed vegetative cover has been achieved. Sites with growth in place sufficient to deter erosion that have not yet achieved final stabilization may petition the City to grant an alternative inspection schedule while awaiting additional growth for final stabilization. These inspections must be conducted in accordance with the above paragraphs.

F) APPLYING BMPs TO STABILIZE SITE:
The duration of the exposure of uncompleted construction to the effects of weather shall be as short as practicable. BMPs such as: seeding, surface roughening, mulching, applying tackifier, use of geotextiles and matting, permanent landscaping, or other selected BMPs shall be applied within fourteen (14) calendar days of completion of grading/soil disturbance activities to stabilize the construction site unless disturbed area is within 100 feet of an MS4 or State Waters or has slopes of 3 to 1 or greater in which case BMPs shall be implemented within seven (7) calendar days of completion of grading activities. Disturbed areas where work is temporarily halted shall be temporarily stabilized within seven (7) days after the activity ceased unless work is to be resumed within thirty (30) calendar days after the activity ceased.

Clearing and grubbing operations shall be scheduled and performed to minimize both the area of the Project disturbed at a given time and the amount of time that disturbed areas remain open. BMPs such as temporary seeding are required between successive construction stages when disturbed areas will not be stable or active for thirty (30) calendar days or more. No payment will be made for additional work required because the Contractor has failed to properly coordinate the BMP schedule, thus causing previously stabilized areas to be disturbed by operations that could have been performed prior to the stabilization. Upon failure of the Contractor to coordinate the permanent BMPs with the grading operations in a manner to effectively control erosion and prevent water pollution, the Permit Enforcement Authority can suspend the Contractor's grading operations and the Project Manager can withhold monies due to the Contractor on current estimates until such time that all aspects of the work are coordinated in an acceptable manner.

G) WORK OUTSIDE LIMITS OF CONSTRUCTION: Non-contiguous areas outside the limits of construction that are used by the Contractor that include, but are not limited to, borrow pits, haul routes, storage and disposal areas, field offices, maintenance, batching areas, etc., shall have appropriate BMPs implemented by the Contractor at the Contractor's expense. Should said areas meet applicable CASDP Permit criteria, the Contractor shall obtain a separate CASDP for each area as applicable at no additional expense to the City.

H) MAINTENANCE: The Contractor shall continuously maintain erosion and sediment control BMPs on a daily basis or as directed by the ECS so that they function properly during and after construction (including work suspensions) until Final Stabilization has been approved by the Permit Enforcement Authority. Maintenance includes, but is not limited to, the following items:

-10-
REVISION OF SECTION 208
EROSION CONTROL

(i) From the time seeding and mulching work begins until the date the Project has reached Substantial Completion of Erosion Control, the Contractor shall keep all seeded areas stabilized at all times. Any damage to seeded areas or to mulch materials shall be promptly repaired.
(ii) All inspection sediment removal, and BMP maintenance activities to comply with all Federal, State & Local erosion control permit requirements until Final Stabilization is reached.
(iii) All removal and replacement of existing BMPs due to damage to same suffered either by the contractor, outside agencies, the public, or acts of God.
(iv) All required mechanical and/ or manual street sweeping.
(v) Discretionary changes required of any regulatory enforcement officer.

If the Contractor fails to maintain the BMPs in accordance with the Contract, or as directed, the City may at the expiration of a period of 48 hours, after having given the Contractor written notice, proceed to maintain BMPs as deemed necessary. The cost thereof will be deducted from any compensation due, or which may become due to the Contractor under this Contract.

I) MINOR SWMP MODIFICATIONS: Shall be made in the field by the Contractor and thoroughly documented in the Contractor's SWMP narrative and drawings. Should the Permit Enforcement Authority deem minor field modifications inadequate, the Contractor may be required to a) make specific modifications as requested by the Permit Enforcement Authority or b) return to the original approved design specifications. Minor SWMP Modifications are allowed, covered under the original CASDP, and required as part of standard maintenance and operation.

J) MAJOR SWMP MODIFICATION: The City reserves the right to require changes in the Work or Project Limits that may require a Major Modification to the SWMP and/ or CASDP due to unforeseen circumstances. Should this occur, the Contractor will be responsible for the following (as applicable):
(i) Make required revisions to comply with changing federal or state rulemaking if occurs within timeframe of Project
(ii) Make required revisions due to unforeseen or unplanned conditions leading to deficient Drawings/ SWMP (hazardous materials encountered, landfills, expansion of work limits, etc.)
(iii) Prepare revised SWMP elements endorsed by a Professional Engineer licensed in the State of Colorado.

K) SUBSTANTIAL COMPLETION OF EROSION CONTROL: When a CASDP is required for the Project, Substantial Completion of the Project as defined by the City and County of Denver General Contract Conditions cannot be reached until Substantial Completion of Erosion Control has been granted. Granting of Substantial Completion of Erosion Control must be requested by the Contractor and be approved by the Permit Enforcement Authority in the form of a "Certificate of Substantial Completion of Erosion Control".

L) FINAL STABILIZATION: Granting of Final Stabilization must be requested by the Contractor and be approved by the Permit Enforcement Authority. Other permanent soil stabilization techniques may be proposed, in writing, by the Contractor and used upon approval, in writing, by the Project Manager and Permit Enforcement Authority.

-11-
REVISION OF SECTION 208
EROSION CONTROL

The Contractor may reach Final Stabilization via the following procedures:

(i) The Contractor shall file Inactivation Request for Construction Activities Stormwater Discharge Permit (available within CASDP guidance documents) with the Permit Enforcement Authority.

(ii) The Contractor shall coordinate with the Permit Enforcement Authority to hold a Final Inactivation Inspection.

(iii) If passing, the Permit Enforcement Authority transmits a letter of approval for Final Stabilization.

(iv) If not passing, the Permit Enforcement Authority transmits a letter of denial for Final Stabilization with associated inspection report to Contractor.

(v) Stabilization, inspection and maintenance requirements shall continue until confirmation of having met final closure requirements have been granted in writing by the Permit Enforcement Authority.
When Final Stabilization has been reached, the Permit Enforcement Authority shall issue a "Certificate of Final Stabilization".

M) FINAL ACCEPTANCE:
CASDP obligations (including reaching Final Stabilization) may hinder the ability to reach Final Acceptance for the overall Project as defined in the City General Contract Conditions.

PART VI: CONSTRUCTION OF BMPs

BMPs shall be constructed so that they conform to all requirements as set forth within the Project SWMP. They shall meet all requirements set forth within each BMP detail and shall be installed and maintained so that they function in an effective and operable manner.

-12-
REVISION OF SECTION 208
EROSION CONTROL

PART VII: METHOD OF MEASUREMENT

Erosion Control Supervisor (ECS) will be measured by the total number of hours the ECS is required to be on the Project performing the duties (including supervision by a Professional Engineer licensed in the State of Colorado) as outlined in this Specification. The Contractor shall record the tasks that were performed by the ECS and the hours that were required to complete each task. The records for the payment period shall be submitted to the Project Manager after completion of work, at the time of monthly pay request, for approval and acceptance.

Silt fence, silt berms, erosion logs, aggregate bags, silt dikes, temporary berms, temporary diversions, temporary drains, and brush barriers will be measured by the actual number of linear feet that are installed and accepted. Stakes, anchors, connections and tie downs used for temporary slope drains will not be measured and paid for separately, but shall be included in the work.

Concrete washout structure will be measured by the actual number of structures that are installed and accepted, and if specified on the SWMP as in-ground will include excavation, embankment, concrete, liner, erosion bales, fencing, and containment and disposal of concrete washout and all other associated waste material.

Storm drain inlet protection will be measured by the unit as specified in the Contract. Sediment trap and sediment basin quantities will be measured by the unit which shall include all excavation and embankment required to construct the item.

Any excavation required for the removal of sediment from traps, basins, areas adjacent to silt fences and erosion logs, and any other cleanout excavation of accumulated sediment, and removal of check dams or storm drain inlet protection will not be measured separately but shall be included in the work.

PART VIII: BASIS OF PAYMENT

Work to furnish, install, maintain, replace (if not due to contractor negligence), remove, and dispose of BMPs specified in the Contract will be paid for at the contract unit price.

Payment will be made under:

Pay Item	**Pay Unit**
Erosion Control Supervisor	Hour
Silt Fence	Linear Foot
Concrete Washout Structure	Each
Storm Drain Inlet Protection	Each
Vehicle Tracking Pad	Each
Rock Sock	Each

-13-
REVISION OF SECTION 208
EROSION CONTROL

Temporary BMPs will be measured and paid for by the BMPs used, except that surface roughening, removal and disposal of sediment, and removal of trash will not be measured and paid for separately.

Payment for each BMP item will be full compensation for all work, materials and equipment required to furnish, install, maintain, remove, and dispose of it. BMPs as deployed per the SWMP requiring replacement due to Contractor negligence and or carelessness shall be provided at the Contactor's expense.

Temporary BMPs required due to the Contractor's negligence, carelessness, or failure to install permanent controls as a part of the work as scheduled or for the Contractor's convenience, shall be performed at the Contractor's expense.

If the Contractor fails to complete construction within the approved contract time, payment will not be made for Section 208 pay items for the period of time after expiration of the approved contract time. These items shall be provided at the Contractor's expense.

The cost for any corrective actions required by the State or City due to contractor's failure to obtain or comply with applicable Permits will be borne by the Contractor, including fines and penalties. In the case of failures on the part of the Contractor in controlling erosion, sedimentation, and/or water pollution, the City may provide the necessary corrective actions. All corrective action costs, including Project engineering costs, will be charged to the Contractor, and appropriate deduction will be made from the Contractor's monthly pay estimate.

The sole remedy for additional costs associated with installation of BMPs as required by regulatory agencies to ensure compliance with local and State requirements shall be per unit BMP as provided in the Bid Schedule of this Contract. The Contractor however may submit a separate itemized Change Order for any required Major SWMP Modification proposed by the City during the course of the Project.

Pay Units for ECS will be full compensation for the Erosion Control Supervisor including all materials, labor and equipment necessary for the ECS to perform the work. Commute time will not be measured and paid for separately, but shall be included in the work. The ECS pay item shall include all labor, Professional Engineering (includes supervisory Professional Engineer licensed in the State of Colorado), and/ or design fees to prepare modifications to Stormwater Management Plan(s), revise or amend Permits, coordinate with State and Local agencies, design special erosion control plans for emergency situations that develop during construction or unexpected weather conditions.

Additional stabilized construction/ staging area proposed by Contractor beyond area included in the Bid shall be installed per requirements of the Permit Authority and Permit Enforcement Authority without any additional compensation.

Payment for concrete washout structure, whether constructed or prefabricated, will be full compensation for all work and materials required to install, maintain, and remove the item. This includes, but is not limited to: excavation, embankment, liner, erosion bales, fencing, signing, and containment and disposal of concrete washout and all other associated waste material.

Silt berm spikes and dike staples will not be measured and paid for separately, but shall be included in the work.

-14-
REVISION OF SECTION 208
EROSION CONTROL

Payment for storm drain inlet protection will be full compensation for all work, materials, and equipment required to complete the item, including surface preparation, maintenance throughout the Project, and removal upon completion of the work. Aggregate will not be measured and paid for separately, but shall be included in the work.

Sweeping, when used as a BMP as shown in the Contract, will be measured by the number of hours that a pickup broom or motorized equipment capable of collecting sediment, authorized by the Project Manager, is used to remove sediment from the roadway or other paved surfaces. Operator will not be measured and paid for separately, but shall be included in the work.

Stakes, anchors, connections, geotextile, riprap and tie downs used for temporary slope drains will not be measured and paid for separately, but shall be included in the work.

Payment for vehicle tracking pad will be full compensation for all work, materials and equipment required to construct, maintain, and remove the entrance upon completion of the work. Aggregate and geotextile will not be measured and paid for separately, but shall be included in the work.

Surveying of permanent BMPs will not be measured and paid for separately, but shall be included in the work.

END OF REVISION OF SECTION

REVISION OF SECTION 209
WATERING AND DUST PALLIATIVES

Section 209 of the Standard Specifications is hereby revised for this project as follows:

Subsection 209.07 paragraph 1 shall be deleted and replaced with the following:

Water for moisture-density control, landscaping, pre-wetting, and for dust palliatives will not be measured and paid for separately but shall be included in the cost of the work.

Subsection 209.08 paragraph 1 shall be deleted.

END OF SECTION REVISION

REVISION OF SECTION 210
MODIFY MANHOLE

Section 210 of the Standard Specifications is hereby revised for this project as follows:

Subsection 210.10, insert the following:

Manholes designated on the plans to be modified shall be inspected by the Contractor to determine a plan of action to place the manhole lid outside of the limits of the curb and gutter. Potential plans of actions include:

1. Removing an existing flat lid or eccentric cone and rotating the cone so the frame and lid are outside the limits of the curb and gutter at the finished grade.
2. Removing an existing conical section of the manhole and replacing with a flat lid or eccentric cone that can be placed so the frame and lid are outside of the limits of the curb and gutter at the finished grade.
3. Removal of the existing manhole and installation of the manhole with a manhole with a large enough diameter so the lid can be rotated so the frame and lid are outside of the limits of the curb and gutter at the finished grade.

The Contractor shall submit a plan of action to the City for approval prior to performing the work associated with modifying the manhole or constructing the curb and gutter. All materials and installations shall be in conformance with the City and County of Denver Wastewater details and specifications.

Adjust Valve Box (Special)(Sanitary Clean-out) shall include all work and materials to adjust sanitary sewer clean outs to the final grade.

Subsection 210.13 Basis of Payment shall be modified to include the following:

Pay Item	**Pay Unit**
Modify Manhole	Each
Adjust Valve Box (Special)(Sanitary Clean-out)	Each

Payment shall include all work and materials necessary to complete the modifications of all manholes and including but not limited to removal and disposal of portions of the existing structure, excavation, additional masonry and/or concrete, new castings, grade rings, backfill and patching of pavement as required to complete the work.

END OF SECTION REVISION

REVISION OF SECTION 212
SEEDING (NATIVE)

Section 212 of the Standard Specifications is hereby revised for this project as follows:

In subsection 212.02 (a), insert the following:

The seed mix for the project is as follows:

Common Name	Scientific Name	Pounds of pure live seed per acre	percent of mix
Blue Flax	Linuim lewisii	1	
Blue grama	Bouteloua gracilis	1.5	25%
Bottlebrush Squirreltail	Sitanion hystrix	7.5	5%
Buffalo grass (primed with KNO3	Buchloe dactyloides	8	25%
Green needle grass	Stipa viridula	5	5%
Prairie June grass	Koeleria cristata	2	5%
Sand dropseed	Sporobulus cryptandrus	.3	5%
Side oats grama	Bouteloua curtipendula	4.5	20%
Western wheat	Agropyron smithii	8	10%
	TOTAL	37.80	

Subsection 212.03 shall be modified to include the following:

Seeding Seasons. Warm season grasses (Blue Grama Grass, Sideoats Grama Grass) shall be sown during the period of May through June.

In subsection 212.06 (b), include the following:

Fertilizer shall not be required for native seeding areas.

Subsection 212.06(c) shall include the following:

Seeding. Broadcast seeding will be accomplished immediately after the surface has been roughened by raking or harrowing. Perform fine grading as required to maintain positive drainage, prevent ponding, and to provide a smooth well-contoured surface.

Subsection 212.08 Basis of Payment shall be modified to include the following:

Pay Item	**Pay Unit**
Seeding (Native)	Acre

Providing and installing barriers as directed by the Project Manager to protect seeded areas from damage from both pedestrian and vehicular traffic will not be paid for separately but shall be included in the work.

END OF SECTION REVISION

REVISION OF SECTION 250
ENVIROMENTAL, HEALTH AND SAFETY MANAGEMENT

Section 250 of the Standard Specifications is hereby deleted and replaced by Standard Special Provision 250. Standard Special Provision 250 is hereby modified as follows:

Subsection 250.03 shall include the following:

The project is located in an urbanized area comprised of commercial properties which were identified as having recognized environmental conditions resulting from historical and current land uses. Procedures for the management of hazardous materials during project activities are included in the project-specific Materials Management Plan (MMP), included in the Appendix of the Specifications.

The MMP limits include 33rd Street and portions of Festival Street which are not being constructed with this project. The areas not being constructed have not been removed from the MMP. The limits of Festival Street which are being constructed with this project shall follow the MMP requirements.

The Contractor shall be responsible for all requirements in the MMP including, but not limited to the following items.

Environmental Health and Safety Management

- The Contractor will prepare a Project Health and Safety Plan and submit three copies of the plan to the project manager.
- The Contractor shall hold an environmental coordination meeting with the City Project Manager and the Denver Department of Public Health and Environment a minimum of 15 days prior to the start of excavation to review the Contractor's Project Health and Safety Plan and procedures that the Contractor will implement to comply with the MMP.
- The Contractor shall complete and submit to the City Project Manager, the Pre-Dig Checklist for Contractors found in the Appendix, prior to starting soil disturbing activities.
- The Contractor will provide project health and safety orientation training for all field workers on the project.

Health and Safety Officer

The Contractor will assign a health and safety officer (HSO) to provide project support in accordance with the requirements in the MMP. The HSO will meet the definition of a HSO as described in CDOT's Specification 250.03, including, but not limited to: "having at least two years of field experience in chemical related health and safety. The HSO shall be either a Certified Industrial Hygienist, Certified Hazardous Material Manager, Professional Engineer, Certified Safety Professional, or Registered Environmental Manager (REM) meeting the criteria set forth in 29 CFR 1926."

-2-
REVISION OF SECTION 250
ENVIROMENTAL, HEALTH AND SAFETY MANAGEMENT

Certified Asbestos Building Inspector (CABI) Support

The Contractor shall provide a CABI who will be required to be onsite during all excavation activities. The CABI shall meet the training requirements of Section 5.5.3(D) of the Colorado Solid Waste Regulations. The CABI will also be trained and certified in accordance with Air Quality Control Commission Regulation No. 8 (5 CCR 1001-10, Part B), for the identification of asbestos-containing materials and the collection of samples to evaluate asbestos content. All CABIs must have worked on at least three different asbestos-in-soil projects and with a minimum of 40 hours of experience as a CABI. The CABI must have sufficient experience to identify historical urban fill (HUF), and regulated asbestos contaminated soil (RACS) in the field. Depending on the project schedule, a minimum of one CABI will be overseeing excavation work, and it may be necessary to engage multiple CABIs if areas of known historical fill or debris are identified at multiple excavation areas.

For this project, the CABI will complete the following:

- Be on-Site, on a full-time basis, during all soil-disturbing activities.
- Conduct Two-Hour Asbestos Awareness Training for all Site personnel who perform any soil-disturbing activities. For the purpose of this Project, those that could encounter these materials are any workers that could engage in subsurface excavation work, such as equipment operators and laborers. Two-hour Asbestos Awareness Training should include such topics as:
  - Information regarding the project scope of work
  - Background information on asbestos, including general awareness and regulations
  - Description of non-suspect asbestos-containing material (ACM) (i.e., non-suspect debris, landscaping materials)
  - Health effects of asbestos
  - Worker protection programs
  - Recognition of suspect materials, including HUF, debris, or other materials that indicate reason to believe that RACS may be present
  - Site-specific concerns related to asbestos and HUF
  - Immediate actions should asbestos be suspected
  - Collect samples of suspect materials as needed.
- Waste that can clearly be identified as only landscaping-type waste does not require CABI oversight.
- If RACS is managed during the project, it is the responsibility of the Contractor and CABI to ensure that the subcontractor performing RACS disturbance is capable of meeting the state requirements.
- The CABI will also be responsible for implementation of the City's Asbestos in Soil Standard Operating Procedure, which is included with the MMP.

-3-
REVISION OF SECTION 250
ENVIROMENTAL, HEALTH AND SAFETY MANAGEMENT

The Contractor may propose using a Qualified Project Monitor (QPM) as defined in Section 5.5.3.(C) of the Colorado Solid Waste Regulations. However, the proposed use of a QPM will be carefully reviewed by the City, and the use of a QPM will only be allowed if approved in writing by the City. The QPM would work with a CABI. Consideration of any request made by the Contractor to use a QPM will only be made after the Project has been awarded to the successful Bidder, and it is expected that the use of a QPM would result in cost savings to the Project. There is no guarantee that the City will approve the proposed use of a QPM.

Asbestos and Chemistry Analytical Costs:

If required, in order to evaluate chemical characteristics in soil and/or groundwater samples, or for asbestos parameters, soil and/or suspect material samples will be analyzed by a NELAC- (or equivalent) certified laboratory.

Haul of Non-hazardous Waste for Disposal:

Materials as described in the MMP that are not considered hazardous or solid waste, may be transported and disposed as non-hazardous waste. Costs for hauling non-hazardous waste for disposal are unique and separate from solid waste disposal or hazardous waste disposal which are already defined in CDOT's Standard 250.03 Specification.

Subsection 250.09 shall include the following:

METHOD OF MEASUREMENT

Environmental Health and Safety Management

All work associated with the environmental coordination meeting, Pre-Dig Checklist, preparation of the Project Health and Safety Plan, preparation of the, project orientation training, asbestos awareness training, and personal and other items specified in CDOT's Standard 250.03 specification, will be paid under the pay item 'Environmental Health and Safety Management.' Environmental Health and Safety Management will not be measured but will be paid for on a lump sum basis.

Health and Safety Officer

The Health and Safety Officer will be paid under the pay item Health and Safety Officer. The Health and Safety Officer will be measured on an hourly basis.

-4-
REVISION OF SECTION 250
ENVIROMENTAL, HEALTH AND SAFETY MANAGEMENT

Certified Asbestos Building Inspector (CABI):

Certified Asbestos Building Inspector (CABI) will be paid under the pay item Certified Asbestos Building Inspector. The quantity to be measured for Certified Asbestos Building Inspector (CABI) will be the total number of hours the CABI(s) is actually used, as authorized, for the work described for a CABI in the MMP or the City's asbestos in soil standard operating procedure (included with the MMP).

Environmental Consultant:

The environmental consultant, if required, will be paid under force account.

Asbestos and Chemistry Analytical Costs:

Analytical costs, if required, will be paid under the pay item Asbestos and Chemistry Analytical Costs based on quoted laboratory rates for the required analyses through the item Materials Sampling and Delivery.

Non-hazardous Waste Disposal:

Materials transported and disposed as non-hazardous waste will be paid under the pay item Haul Non-Hazardous Waste disposal. The Contractor shall include all costs associated with non-hazardous waste disposal except for disposal fees in this item. Disposal shall be at the Denver-Arapahoe Disposal Site ("DADS"). No disposal fees will be paid to the Contractor for any materials of any nature that the Contractor disposes of at the Denver-Arapahoe Disposal Site ("DADS"). Disposal fees at DADS will be paid by the City directly to DADS.

Subsection 250.10 shall include the following:

The accepted quantities will be paid for at the contract unit prices for each of the pay items listed below that appear on the bid schedule:

BASIS OF PAYMENT

Pay Item	**Pay Unit**
Environmental Health and Safety Management	Lump Sum
Health and Safety Officer	Hour
Certified Asbestos Building Inspector	Hour
Material Sampling and Delivery	Each
Haul Non-Hazardous Waste	Cubic Yard
Material Handling (Stockpile)	Cubic Yard

-5-

REVISION OF SECTION 250
ENVIROMENTAL, HEALTH AND SAFETY MANAGEMENT

The Contractor shall include all costs associated with Solid Waste Disposal and Non-Hazardous waste disposal in the respective pay items except for disposal fees. No disposal fees will be paid to the Contractor for any materials of any nature that the Contractor disposes of at the Denver-Arapahoe Disposal Site ("DADS"). Disposal fees at DADS will be paid by the City directly to DADS.

The Contractor shall adhere to all provisions and requirements of the Material Management Plan. All of the Contractor's costs to satisfy this requirement that are not included in the Pay Items above shall be include in the pay item Environmental Health and Safety Management, and no separate measurement or payment will be made.

END OF SECTION REVISION

REVISION OF SECTION 304
AGGREGATE BASE COURSE

Section 304 of the Standard Specifications is hereby revised for this project as follows:

Subsection 304.02 shall include the following:

Materials for the base course shall be Aggregate Base Course (Class 6) as shown in subsection 703.03

The aggregate base course (Class 6) must meet the gradation requirements and have a resistance value of at least 78 when tested by the Hveem Stabilometer method.

END OF SECTION REVISION

REVISION OF SECTION 401 AND 403
PLANT MIX PAVEMENTS

Sections 401 and 403 of the Standard Specifications are hereby deleted, except for measurement and payment, and replaced with the Item 20 "Hot Mix Asphalt Pavement" Specifications from the Metropolitan Government Pavement Engineers Council (MGPEC), Volume 1 Pavement Design Standards and Construction Specifications, latest version, included below.

Contact MGPEC's Administrative Assistant Pam Weimer at 303-979-2190 for MGPEC membership information and to receive full design standards and construction specifications.

Subsection 9.16 of the MGPEC Specifications is revised as follows:

9.16 MEASUREMENT

Delete First Paragraph

Add the following:

The measurement for payment of Hot Mix Asphalt Pavement will be the actual number of tons hot mix asphalt, in place, complete as pavement, and accepted by the Project Manager. No measurement for payment will be made for hot mix asphalt placed in areas not specifically approved by the Project Manager, nor required due to careless or unauthorized operation by the Contractor.

The measurement for payment of Hot Mix Asphalt Pavement (Patching) shall be based on actual tons delivered to project site, or based on density, length x width and thickness to calculate tons, as approved by the Project Manager

Subsection 9.17 of the MGPEC Specifications is hereby deleted and replaced with the following:

Payment will be made under:

PAY ITEM	**PAY UNIT**
Top Lifts: Hot Mix Asphalt (Grading SX) (N=75) (PG 64-22) (25% max RAP)	Ton
Middle and Bottom Lifts: Hot Mix Asphalt (Grading S) (N=75) (PG 64-22) (25% Max RAP)	Ton
Patching: Hot Mix Asphalt (Patching) (Full Depth) (N=100) (PG 64-22) (25% Max RAP)	Ton



Form 20
Mix Design Requirements V. 10/2017

Agency: City and County of Denver, Dept. of Public Works **Date:** Aug. 14, 2018

Project: 2015-PROJMSTR 0000571 - Festival Roadway Construction

Details: 33rd Street and Festival Street **APM (tons):** 329
(To / From, Length)

Classification ☐ Arterial ☐ Collector X Local ☐ Other _____

APM Placement ☐ Wearing course X Intermediate lift X Bottom lift X Patching

ASPHALT MIX DESIGN

Design / Traffic
- ☐ N_{design} = 50 gyrations <100,000 ESALs
- X N_{design} = 75 gyrations ≥100,000 to <3 million ESALs

Binder ☐ PG 58-28 X PG 64-22 ☐ PG 76-28 (Top lift only)

Grading

	Minimum Lift (3x)	Maximum Lift (5x)
☐ ST (3/8")	1 1/8"	2 ¼"
☐ SX (½")	1 ½"	2 ½"
X S (¾")	2"	4 ¼"
☐ SG (1")	3"	5 "
☐ SMA (½")	1 ½"	2 ½"
☐ SMA (¾")	3"	4 ¼"

Anti – Strip ☐ Liquid ☐ Lime

BEST PRACTICES to include in Mix Design

RAP X 25% ☐ 35% (Grading SG only)

WMA ☐ Additive ☐ Foaming

AGENCY EXCEPTIONS

☐ **No RAP in wearing course**
☐ **No RAP** allowed in mixture

☐ **No WMA** allowed in mix

MGPEC - VOLUME I - PAVEMENT DESIGN STANDARDS & CONSTRUCTION SPECIFICATIONS
2017 Version

Item 20 - Page 20

METROPOLITAN GOVERNMENT
PAVEMENT ENGINEERS COUNCIL

Form 20
Mix Design Requirements V. 10/2017

Agency: City and County of Denver, Dept. of Public Works **Date:** Aug. 14, 2018

Project: 2015-PROJMSTR 0000571 - Festival Roadway Construction

Details: 33rd Street and Festival Street **APM (tons):** 219
(To / From, Length)

Classification ☐ Arterial ☐ Collector X Local ☐ Other _____

APM Placement X Wearing course ☐ Intermediate lift ☐ Bottom lift ☐ Patching

ASPHALT MIX DESIGN

Design / Traffic
☐ N_{design} = 50 gyrations <100,000 ESALs
X N_{design} = 75 gyrations ≥100,000 to <3 million ESALs

Binder ☐ PG 58-28 X PG 64-22 ☐ PG 76-28 (Top lift only)

Grading	Minimum Lift (3x)	Maximum Lift (5x)
☐ ST (3/8")	1 1/8"	2 ¼"
X SX (½")	1 ½"	2 ½"
☐ S (¾")	2"	4 ¼"
☐ SG (1")	3"	5 "
☐ SMA (½")	1 ½"	2 ½"
☐ SMA (¾")	3"	4 ¼"

Anti – Strip ☐ Liquid ☐ Lime

BEST PRACTICES to include in Mix Design

RAP X 25% ☐ 35% (Grading SG only)

WMA ☐ Additive ☐ Foaming

AGENCY EXCEPTIONS

☐ **No RAP in wearing course**
☐ **No RAP** allowed in mixture

☐ **No WMA** allowed in mix

MGPEC - VOLUME I - PAVEMENT DESIGN STANDARDS & CONSTRUCTION SPECIFICATIONS
2017 Version

Item 20 - Page 20

END OF REVISION OF SECTION

REVISION OF SECTION 603

CULVERTS AND SEWERS

Section 603 of the Standard Specifications is hereby revised for this project as follows:

Subsections 603.03 through 603.11 shall be replaced with the City and County of Denver (CCD), Department of Public Works document titled "Storm Drainage and Sanitary Sewer Construction Detail and Technical Specifications" where construction of culverts and sewers is by open trench construction methods. This document can be found at the following web address: http://www.denvergov.org/WMDDesign. Delete reference to measurement and payment.

Structure Excavation, Bedding Material, and Structure Backfill and Embankment and shoring, if required, with all appurtenances including design by a registered engineer will not be measured and paid for separately but shall be included in the cost of Reinforced Concrete Pipe (Complete in Place).

END OF SECTION REVISION

REVISION OF SECTION 608
SIDEWALKS

Section 608 of the Standard Specifications is hereby revised for this project as follows:

Subsection 608.01 shall include the following:

This work consists of the construction of concrete sidewalks in accordance with these specifications and in conformity with the lines and grades shown on the plans or established.

Subsection 608.02 shall be deleted in its entirety and replaced with the following:

Materials shall meet the requirements specified in the following subsections:

Joint Fillers	705.01
Joint Sealants	705.01
Fiber Mesh. Buckeye UltraFiber	500

Concrete shall conform to the requirements for Class "P" concrete as specified in subsections 601.02 and 601.03. AASHTO M 43 Size 57 or 67 aggregate shall be used, and a maximum slump of 4" will be permitted.

New Curb Ramps shall be standard gray and constructed with integral Truncated Domes per "City and County of Denver Department of Public Works Standards and Details for Engineering Division." If repairs or alterations to existing colored ramps are required, the curb ramp concrete is to be integrally colored with pigment #1117 as manufactured by Davis Colors at the rate of 4 pounds per sack of cement, or of an equal color and intensity approved by the Project Manager and cured with a non-pigmented "clear" curing compound. The Project Manager may adjust the color additive ± one pound, if desired.

Concrete shall be cured with a non-pigmented "clear" curing compound.

All concrete used for sidewalks shall be reinforced with polypropylene fibers. Polypropylene fibers shall meet requirements of ASTM C1116, Type III. Length of fibers shall be as recommended by the manufacturer. Add 1.5 pounds polypropylene fibers per cubic yard of concrete or as recommended by the manufacture.

Subsection 608.03 (a) shall be revised to include the following:

Delete the third sentence and add:

Excavation. Where excavation to the finished grade elevation results in subgrade of unsuitable soil, the Project Manager may designate the unsuitable material to be removed and replaced with approved material. Removal of unsuitable material shall be paid for as Unclassified Excavation in accordance with Revision of Section 203.05(c), and backfilled with Aggregate Base Course (Class 6), or other material approved by the Project Manager.

-2-

REVISION OF SECTION 608
SIDEWALKS

Subsection 608.03(c) shall be revised to include the following:

The Contractor shall ensure that new concrete items built under this contract drain properly and, as such, there are no areas of standing water on new concrete items.

Subsection 608.03(d) shall be revised to include the following:

Finishing. Finishing shall occur only after the disappearance of bleed water. The addition of superficial water to the surface of the concrete to assist in finishing operations will not be permitted. Sprinkling of pigment onto the fresh surface will not be permitted.

The Contractor shall protect all new concrete items built under this Contract against defacement, or other injury, from any cause. If said damage cannot be adequately repaired to the satisfaction of the Project Manager, the Contractor shall remove and replace the unacceptable items at Contractor's expense.

Subsection 608.03 (f) shall be revised to include the following:

The Contractor shall protect all new concrete items built under this Contract against defacement, or other injury, from any cause. If said damage cannot be adequately repaired to the satisfaction of the Engineer, the Contractor shall remove and replace the unacceptable items at Contractor's expense. The Contractor shall cure in accordance with 412.14.

Subsection 608.05 shall include the following:
Concrete Sidewalk will be measured by the square yard of finished surface completed and accepted.

Subsection 608.06 shall include the following:

Payment will be made under:

Pay Item	**Pay Unit**
Concrete Sidewalk	Square Yard

Payment for Concrete Sidewalk shall include all labor, equipment and materials required to construct the items per City and County of Denver Standards Drawings.

END OF SECTION REVISION

REVISION OF SECTION 609
CURB AND GUTTER

Section 609 of the Standard Specifications is hereby revised for this project as follows:

Subsection 609.01 shall include the following:

Curb & Gutter, Gutter (Special) and Mountable Curb shall be built in accordance with the details included in the plans.

Subsection 609.02 shall be revised as follows:

In the first paragraph, reference to Section 703.07, Bed Course Material, shall be deleted.

Subsection 609.02, Paragraph 2 shall be deleted and replaced with the following:

Concrete shall conform to the requirements for Class "P" concrete as specified in subsections 601.02 and 601.03. AASHTO M 43 Size 57 or 67 aggregate shall be used, and a maximum slump of 4" will be permitted.

Bituminous Mountable Curb (Temporary) and Bituminous sidewalk shall be constructed using the same HMA as the top lift of HMA pavement.

Subsection 609.03(c) shall include the following:

The Contractor shall protect all new concrete items built under this Contract against defacement, or other injury, from any cause. If said damage cannot be adequately repaired to the satisfaction of the Engineer, the Contractor shall remove and replace the unacceptable items at Contractor's expense.

Subsection 609.03(d) shall include the following:

For construction of curb and gutter adjacent to existing concrete pavement, the joint pattern shall match that of the concrete pavement. The joint pattern shall be approved by the Engineer prior to construction.

Subsection 609.03 (f) shall include the following:

All curing compound shall adhere to ASTM C-1315 (Cure-Seal) for all street and flatwork concrete placed on the project that will be subjected to de-icing chemicals. Use of curing compound only meeting C-309 is not allowed in those areas.

Subsection 609.03(i) shall include the following:

The Contractor shall ensure that new concrete items built under this contract drain properly and, as such, there are no areas of standing water on new concrete items.

Subsection 609.07 shall include the following:

Payment will be made under:

Pay Item	**Pay Unit**
6" Curb & Gutter – 2' Catch Pan	Linear Foot

Gutter (Special)	Linear Foot
4” Mountable Curb	Linear Foot
Curb Type 6 (Section M)	Linear Foot

END OF SECTION REVISION

REVISION OF SECTION 625
CONSTRUCTION SURVEYING

Section 625 of the standard specifications is hereby revised as follows:

Delete section 625 and replace with the following:

DESCRIPTION

625.01 This work consists of the construction surveying, calculating, and staking necessary for the construction of all elements of the project. The work shall be done under the supervision of a Professional Land Surveyor (PLS) who is licensed in the State of Colorado.

Locating, preserving, referencing, installing and restoring land monuments such as Primary Control monuments from which the Right of Way or any land boundary will be calculated, described or monumented, Public Land Survey System (PLSS) monuments, General Land Office (GLO) monuments, Bureau of Land Management (BLM) monuments, Mineral Survey (MS) monuments, Right of Way (ROW) monuments, property boundary monuments and offsets, range points, benchmarks, easement monuments, and other monuments that are required by law or regulation to be established by a PLS, and the determination of any land boundary, shall be done under the supervision of a Professional Land Surveyor (PLS) who is licensed in the State of Colorado.

MATERIALS AND EQUIPMENT

625.02 The Contractor shall furnish all personnel, survey equipment, safety equipment, materials, and traffic control necessary to perform the required construction surveying and staking. All surveying equipment, including Electronic Distance Meters (EDM), total stations, theodolites, levels, rods, tapes, tripods, tribrachs, and Global Positioning System (GPS) receivers and equipment.

If any survey equipment is found to be functioning outside the manufacturer's specified tolerance, certification from an approved repair facility showing that the instruments have been repaired, properly adjusted, or both if necessary shall be included in the survey records and submitted to the City Surveyor's Office before being used.

CONSTRUCTION REQUIREMENTS

625.03 A Construction Survey Conference shall be held with the City Surveyor's Office prior to performing any surveying work under this section. The Contractor's Surveyor (PLS) and Party Chief shall attend. A Construction Survey Checklist shall be completed and signed by the City Surveyor's Office and the contractor.

The Contractor shall check and verify all established Primary horizontal and vertical control points.

All survey records generated shall be the property of the City and shall be available to the City Surveyor's Office for inspection or reproduction at all times. All survey records shall be transmitted to the City Surveyor's Office for inclusion into the project records before final project acceptance.

-2-
REVISION OF SECTION 625
CONSTRUCTION SURVEYING

Electronic formats may be acceptable, please coordinate with the City Surveyor's Office.

Copies of any new Monument Records filed by the PLS with the State Board of Registration shall be submitted to the City Surveyor prior to filing.

625.04 Contractor Surveying. The Contractor's PLS shall perform all construction surveying and staking that is necessary for construction of the project.

625.05 Staking. It is the responsibility of the Contractor's PLS to adhere to industry standards and acceptable practices in regard to staking. Any restaking will be the responsibility of the Contractor's PLS at no cost to the City.

625.06 Accuracy and Tolerances. It is the responsibility of the Contractor's PLS to adhere to industry standards and applicable standards with regard to horizontal and vertical accuracy tolerances.

625.07 Responsibility and Inspection. Supervision and coordination of construction surveying and staking is the Contractor's responsibility. The City Surveyor's Office or Engineer may inspect the Contractor's surveying; however such inspection will not relieve the Contractor of any responsibility for accuracy or completeness of work. All Contractor surveying inaccuracies, errors, or omissions shall be corrected at the Contractor's expense.

625.08 Reset Monuments and Stakes. Survey monuments, benchmarks, and other significant stakes that are damaged, destroyed, or made inaccessible by the progress of construction shall be replaced, transferred or reestablished at the Contractor's expense.

Locating, preserving, referencing, installing and restoring land monuments as described in 625.01, shall be done in accordance with Section 629, under the supervision of a PLS who is experienced and competent in Right of Way and boundary surveying and licensed in the State of Colorado.

625.09 Changes. All changes in lines and grades required by field conditions and all discrepancies in grades, alignment, location or dimensions detected by the Contractor shall be immediately submitted to the Engineer in writing. No changes in given data or plans will be allowed unless approved by the Engineer in writing. All changes shall be documented by the contractor.

625.10 Pay Quantities Measurements. The Engineer will perform all interim and final measurements deemed necessary by the City to determine contract pay quantities. The Contractor shall establish and maintain Control points and stationing as required for these measurements.

625.11 Survey Records. Survey records shall be completed as the work is done. Field survey notes for construction surveying and checking by the Contractor shall be recorded in survey records in conformance with industry standards and acceptable practices.

All survey records generated shall be the property of the City and shall be available to the City Surveyor's Office or the Engineer for inspection or reproduction at all times. All survey records shall be transmitted to the City Surveyor's Office for inclusion into the project records before final project acceptance. All survey records shall be stamped with the seal of, and signed by, the responsible PLS.

-3-

REVISION OF SECTION 625
CONSTRUCTION SURVEYING

Electronic submittal of survey records may be acceptable, please coordinate with the City Surveyor's Office.

METHOD OF MEASUREMENT

625.12 Construction surveying will not be measured but will be paid for on a lump sum basis.

BASIS OF PAYMENT

625.13 Payment for construction surveying will be the contract lump sum bid and will be full compensation for all surveying work necessary to complete the project to include all resetting of stakes, marks, monuments and preparing survey documentation as required.

Partial payment for construction surveying, as determined by the Engineer, will be made as the work progresses.

Payment will be made under:

Pay Item	**Pay Unit**
Construction Surveying	Lump Sum

Traffic control for construction surveying will be measured and paid for in accordance with Section 630.

END OF SECTION REVISION

REVISION OF SECTION 627
PAVEMENT MARKING

Section 627 of the Standard Specifications is hereby revised for this project as follows:

Section 627.08 shall include the following:

Installation shall be in accordance with the manufacturer's recommendations.

Subsection 627.12 shall include the following:

Removal of existing pavement marking will not be measured and paid for separately but will be considered included in the unit cost for new pavement markings.

Sandblasting or other preparation of the roadway surface required to install preformed plastic pavement markings in accordance with the manufacturer's recommendation shall be considered incidental to the installation of new markings and will not be measured and paid separately.

Subsection 627.13 shall include the following:

Payment will be made under:

Pay Item	**Pay Unit**
24" Solid What Plastic Tape (Preformed Thermoplastic)	Linear Foot

END OF SECTION REVISION

REVISION OF SECTION 630
CONSTRUCTION ZONE TRAFFIC CONTROL

Section 630 of the Standard Specifications is hereby revised as follows:

Subsection 630.01 shall be modified to read:

…as required by, in descending order of precedence, these plans and special specifications, Traffic Barricade Manual published by the City and County of Denver, the Standard Specifications, as augmented by the Colorado Department of Transportation M and S standards, and the Manual on Uniform Traffic Control Devices for Streets and Highways.

Subsection 630.02 shall include the following:

Roll-up construction signs will not be allowed.

Subsection 630.02 through 630.08 shall be as provided in the City and County of Denver Traffic Barricade manual, latest edition. Modifications to said manual are:

Section III shall include:

Traffic Control. Traffic control through the construction area is the responsibility of the Contractor. Before starting construction the Contractor shall submit, in writing, the proposed Method of Handling Traffic (MHT) for the initial phase of construction. When a different MHT is required for a subsequent construction phase, it must be submitted two weeks prior to starting that phase. All proposed MHTs shall be approved, in writing, by the Engineer. No phase of construction shall start until an acceptable MHT has been received and approved by the Engineer. The proposed methods shall include, as a minimum, the following:

A detailed diagram that shows the location of all sign placements, including advance construction signs (if not previously approved) and speed limit signs; method, length and time duration for lane closures; purpose and location of flag persons.

A tabulation of all traffic control devices shown in the detailed diagram including, but not limited to: construction signs, vertical panel; vertical panel with light; barricades; cones, drum channelizing devices; concrete barrier (temporary); advance warning flashing or sequencing arrow panel. Certain traffic control devices may be used for more than one operation or phase. However, all devices required for any particular phase must be detailed and tabulated for each phase. Certain traffic control devices may be used for more than one phase of construction.

Number of flaggers and hours required.

Number of days a Traffic Control Supervisor is required.

Number of hours for uniformed traffic control.

Approval of the proposed MHT is intended to indicate those devices for which payment is to be made. Such approval does not relieve the Contractor of liability specifically assigned to him under the contract. The Contractor shall erect and maintain warning lights, signs, barricades, and sufficient safeguards around all excavations, embankments, and obstructions.

-2-
REVISION OF SECTION 630
CONSTRUCTION ZONE TRAFFIC CONTROL

VI.B.3 therein shall include:

Non-metallic drums may be substituted for vertical panel channelizing devices.

VI.F shall include:

The Contractor shall, at the preconstruction conference, designate one of his employees, other than the Superintendent, to be responsible for traffic control management. This responsibility shall include management of the Contractor's signing and all other details covered by the Specifications which contribute to the convenience, safety, and orderly movement of traffic and to the comfort of the traveling public. The designated employee will have the Certification of the Traffic Control Supervisor as a Worksite Traffic Supervisor by the American Traffic Safety Services Association (ATSSA) in lieu of completion of the CDOT minimum training requirements.

Traffic control management shall be maintained and inspected on a 24-hour per day basis at no additional cost to the project. The Contractor shall make arrangements so that the Traffic Control Manager or his approved representative will be available on every working day, "on call" at all times and available upon the Engineer's request at other than normal working hours. The Traffic Control Manager shall have an up-to-date copy of part VI of the MUTCD, pertaining to traffic controls for street and highway construction, as well as the City and County Traffic Barricade manual, available at all times. In addition, provisions shall be made for flaggers to assist handicapped individuals, those who live or work near the project vicinity, and others traverse through the construction zone safely, at no additional cost to the project.

VI.F.2 The third item shall read:

The flagger's STOP/SLOW sign paddle shall be 18 inches with letters six inches high.

Subsections 630.09 through 630.14 of the Standard Specifications shall apply except as otherwise provided herein.

Subsection 630.09 shall include the following:

General Traffic Control Plan requirements for this project are as follows:

Construction Zone Traffic Control Phasing Plans included in the plans are to give the Contractor a general idea of the phasing of the work. Alternate phasing plans will be considered, but are subject to approval by the City's Project Manager. These plans are not all inclusive, and the Contractor shall submit a detailed Traffic Control Plan, including a

Method for Handling Traffic (MHT) for each phase of construction, to the Engineer for approval by the City **at least two (2) weeks** prior to the start of any construction phase or prior to any changes in traffic control. The MHTs shall include as a minimum the requirements listed under 630.10(a) of the Standard Specifications. The MHTs shall also include the following:

- Temporary Pavement Markings
- Work Zones

-3-
REVISION OF SECTION 630
CONSTRUCTION ZONE TRAFFIC CONTROL

- Special construction activities
- Traffic control during phasing changes
- Coordination provisions for utility relocations and coordinated private utility work

The Contractor shall cooperate fully with the Engineer, utility owners and contractors, and other contractors to assure adequate and proper traffic control is provided.

Access to pedestrian routes shall be maintained at all times during construction. Temporary detours may be allowed, if agreed by the Engineer in advance of the work.

Construction and maintenance of temporary access ramps, paths or other temporary facilities through work zones shall be the responsibility of the Contractor. Depending on the frequency of use, the duration it is intended, and the overall performance of the temporary facility, the engineer may require the use of better performing materials (including asphalt) as appropriate.

Subsection 630.15 shall include the following:

When the contract includes Traffic Control pay items by the week:

> Traffic channeling devices consisting of vertical panel, traffic cones, or drum channeling device will be measured by the unit/week. Concrete barriers will be measured by the linear foot/week. Advance warning flashing or sequencing arrow panels will be measured to the unit/week according to size. The flashing beacon (portable) will be measured as a unit/week complete in place. Sign panels will be paid for under the appropriate item unit/week.

A day shall be defined as the time from 12:00 midnight to 12:00 midnight. A week shall be defined as the time from Sunday at 12:00 midnight to the following Sunday at 12:00 midnight. The Traffic Control Manager shall keep a daily log of traffic control devices and personnel. The log shall list all devices and personnel deployed within the limits of construction for each day and shall be available for review by the Engineer by noon the following Monday to be eligible for payment for the previous week's work.

Plastic temporary fencing shall conform to section 710.04 and chain link fencing shall conform to section 710.03. Both items will be paid for by linear foot. Installation, maintenance, and relocation shall be included in the cost of the bid.

Construction traffic control devices, as determined by the approved MHT, will be paid for based upon the Traffic Control Manager's weekly submittal of daily logs. The number of traffic control devices paid per week shall be the maximum number of approved devices deployed on any one day during that week.

END OF SECTION REVISION

UTILITIES

The known utilities within the limits of this project are:

UTILITY	CONTACT/E-MAIL	TELEPHONE
Denver Water 1600 W. 12th Avenue Denver, CO 80204	Ray Batts rapheal.batts@denverwater.org	720-345-7069
Xcel Energy 1123 W. 3rd Avenue Denver, CO 80223	Marisa Montoya marisa.montoya@xcelenergy.com	303-5470148
Denver Wastewater Management Division 201 W. Colfax, 5th Floor Denver, CO 80202	Ted Christianson ted.christianson@denvergov.org	303-446-3722
Comcast	Kip West Kip_west@cable.comcast.com	720-347-9992
AT&T	Tom Jake tjakes@clearwaterconsluting.net	720-289-5471
Century Link	Lisa Hauswirth Lisa.hauswirth@centurylink.com	720-578-3715
Denver Traffic 201 W. Colfax Ave Denver, CO 80202	Sam Gonzales sam.gonzales@denvergov.org	720-865-4800

The work described in these plans and specifications requires full cooperation between the Contractor and the utility owners in conducting their respective operations necessary to complete the utility work with minimum delay to the project.

PART 1 - CONTRACTOR SHALL PERFORM THE WORK LISTED BELOW:

Coordinate project construction with the performance by the utility owner of each utility work element listed in Part 2 below. Perform preparatory work specified in Part 2 for each utility work element. Provide an accurate construction schedule that includes all utility work elements to the owner of each impacted utility. Provide each utility owner with periodic updates to the schedule. Conduct necessary utility coordination meetings, and provide other necessary accommodations as directed by the Project Manager. Notify each utility owner in writing, with a copy to the Project Manager, prior to the time each utility work element is to be performed by the utility owner. Provide notice, as specified in Part 2, immediately prior to the time the utility work must begin to meet the project schedule.

Provide traffic control, as directed by the Project Engineer, for any utility work by the utility owner within the project limits expected to be coordinated with construction. However, traffic control for utility work outside of typical project work hours shall be the responsibility of the utility owner.

Perform each utility work element for every utility owner listed in Part 1. Notify each utility owner in advance of any work being done by the Contractor to its facility, so that the utility owner can coordinate

its inspections for final acceptance of the work with the Project Manager. Obtain written acceptance from the utility owner for work performed by Contractor.

All Utility Companies

The Contractor will contact each utility company a minimum of 2 business days, unless otherwise noted, prior to working in the utility company's area so that the utility company can provide an inspector and/or complete any necessary adjustments or relocations.

If a need for utility work by either the Contractor or a Utility Company arises, the following shall apply:

> The Contractor shall be responsible for coordinating the adjustment of utilities on this project. The Contractor shall keep each utility company advised of any work being performed in the vicinity of their facilities, so that each utility company can coordinate any needed locates, adjustments or inspections. Contractor shall provide the appropriate utility company ample notice, but not less than two (2) working days, prior to commencing activities in the vicinity of their facilities. Any additional work performed by the Contractor on behalf of the impacted utility company shall not be paid for by the City, but shall be paid by the utility company requiring the work, unless otherwise agreed to in writing by the Project Manager.

Contractor shall provide the utility owner written notice 30 days immediately prior to each utility work element expected to be coordinated with construction.

Denver Wastewater Management

The Contractor shall perform all work on Denver Wastewater Management storm facilities in conformance with standards and specifications of the City and County of Denver.

The Contractor shall construct the storm sewer system as shown on River North Park plans.

The Contractor shall adjust, and modify as applicable, sanitary and storm sewer manholes up to 1/4" to 1/2" below final grade of the paved surface as shown on the plans.

The Contractor will obtain and file any additional required permitting applications to the City and County of Denver Public Works Permit Operations office.

The Contractor shall coordinate all required inspections with Denver Wastewater Management forces.

The Contractor shall notify the utility owner 5 days immediately prior to required inspections of utility work performed by the Contractor.

Denver Water Department

All work on Denver Water Department facilities shall be performed by contractors on the current list of Denver Water Department Pre-Qualified Contractors.

Water line work is detailed in the River North Park plans and specifications. All water line work will be done following the approved RiNo water line plans.

-3-
UTILITIES

The Contractor shall adjust valve boxes up to 1/4" to 1/2" below final grade of the paved surface as shown on the plans. Each valve box shall be cleaned according to the plans.

Contractor shall coordinate all required inspections with Denver Water Department forces.

The Contractor shall notify the utility owner 5 days immediately prior to required inspections of utility work performed by the Contractor.

Denver Traffic Operations

Except for reset items, the Contractor shall maintain operation of all existing signal equipment, including luminaires, until the new equipment is installed and ready for operation.

The Contractor shall coordinate all work and required inspections with Denver Traffic forces.

The Contractor shall notify the utility owner 5 days immediately prior to required inspections of utility work performed by the Contractor.

Xcel Energy- Electric Distribution

The Contractor shall confirm the depth of all Xcel electric facilities in the street reconstruction areas by potholing eight (8) weeks prior to any excavation.

If adjustments or relocations are necessary prior to the street reconstruction, the Contractor shall notify Xcel Energy a minimum of six (6) weeks prior to excavation.

The Contractor shall protect all Xcel Energy facilities in place during construction unless additional relocation or adjustments are necessary.

The Contractor shall provide the utility owner written notice 30 days immediately prior to each utility work element expected to be coordinated with construction.

The Contractor shall coordinate construction operations with the utility company.

The Contractor shall provide traffic control for utility relocations.

Denver Parks

The Contractor shall notify Denver Parks 5 days prior to required inspections.

The Contractor shall coordinate construction operations with Denver Parks.

The Contractor shall provide traffic control for utility relocations.

-4-
UTILITIES

PART 2 - UTILITY OWNERS SHALL PERFORM THE WORK LISTED BELOW:

This work will be performed by the utility owners as necessary to avoid conflicts with construction activities. New locations shall be as indicated on the plans. Utility owners shall comply with schedule requirements of the Contractor and make every effort not to impact the overall construction schedule. Unless otherwise approved by the CCD Project Manager, abandoned aboveground appurtenances such as pedestals shall be removed and abandoned underground utilities and manholes/handholds shall be abandoned in place.

Although the Contractor shall provide traffic control for utility work expected to be coordinated with construction, traffic control for utility work outside of typical project work hours shall be the responsibility of the utility owner. The utility owner shall prepare and submit to the CCD Project Manager a Method of Handling Traffic for utility work to be performed outside typical project work hours. The utility owner shall obtain acceptance of the Method of Handling Traffic from the CCD Project Manager prior to beginning the utility work to be performed outside typical project work hours.

Utility owners are responsible for obtaining all necessary permits from the City and County of Denver, as required.

Denver Wastewater Management

Denver Wastewater shall inspect utility work performed by the Contractor listed in Part 1 above. The Contractor shall provide the utility owner written notice 5 days immediately prior to each required inspection.

Denver Water Department

Denver Water shall inspect utility work performed by the Contractor listed in Part 1 above. The Contractor shall provide the utility owner written notice 5 days immediately prior to each required inspection.

Xcel Energy – Signal Operations

No relocation work is anticipated.

Xcel Energy – Electric Transmission

No relocation work is anticipated. Xcel Energy forces shall coordinate with the Contractor to confirm depths of all facilities in the project area.

Xcel Energy- Electric Distribution

Xcel Energy forces shall coordinate with the Contractor to confirm locations and depths of all facilities in the project area. If relocations or adjustments are needed in the street reconstruction areas, Xcel Energy forces shall coordinate with the Contractor to relocate/adjust the impacted facilities in a timely manner

-5-
UTILITIES

Denver Parks

Denver Parks forces shall inspect utility work performed by the Contractor listed in Part 1 above. The Contractor shall provide the utility owner written notice 5 days immediately prior to each required inspection.

GENERAL

The Contractor shall comply with Article 1.5 of Title 9; CRS ("Excavation Requirements") when excavating or grading is planned in the area of underground utility facilities. The Contractor shall notify all affected utilities at least two (2) business days, not including the actual day of notice, prior to commencing such operations. The Contractor shall contact the Utility Notification Center of Colorado (UNCC) at phone no. **811 or 1-800-922-1987**, to have locations of UNCC registered lines marked by member companies. All other underground facilities shall be located by contacting the respective owner. Utility service laterals shall also be located prior to beginning excavation or grading.

The locations of utility facilities as shown on the plan and profile sheets were obtained from the best available information. No warranty is made for the adequacy or accuracy of subsurface information provided. The contractor shall cooperate with the utility owners in their relocation operations as provided in Denver's General Contract Conditions. No guarantee is made that utility conflicts will be resolved prior to construction activities and any delays resulting from utility relocation work shall be dealt with in accordance with Denver's General Contract Conditions.

All costs incidental to the foregoing requirements will not be paid for separately, but shall be included in the work.

END OF SECTION REVISION

RIGHT OF WAY

Right of Way

Portion of the work shown in the plans extends outside existing right of way. The City of Denver is in the process of obtaining permission from adjacent property owners to construct those element of the proposed work which extend beyond the proposed right of way or easements. The Contractor shall coordinate with Denver's Project Manager to confirm Denver has secured permission to work on property outside the proposed ROW or easement. No work outside the ROW will be allowed without this permission.

APPENDIX A

Pinyon Environmental, Inc.

Corporate Headquarters
9100 West Jewell Avenue, Suite 200 Lakewood, CO 80232
TEL 303 980 5200 FAX 303 980 0089
www.pinyon-env.com

December 8, 2015

Materials Management Plan

Proposed 33rd and Festival Streets
Denver, Colorado

Prepared For:

City and County of Denver
Department of Public Works
201 W. Colfax, Department 506
Denver, Colorado 80202

On Behalf Of:

Tsiouvaras Simmons Holderness, Inc.
5960 DTC Boulevard, Level 3, Suite 345 W
Greenwood Village, Colorado 80111

Pinyon Project No.:

1/15-670-01.8003

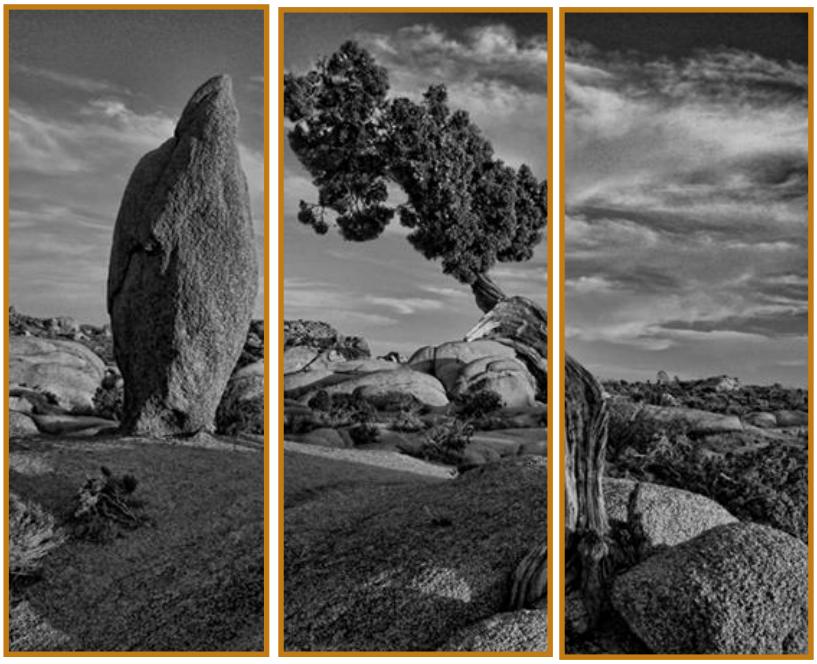

Pinyon Environmental, Inc.

Corporate Headquarters
9100 West Jewell Avenue, Suite 200 Lakewood, CO 80232
TEL 303 980 5200 FAX 303 980 0089
www.pinyon-env.com

December 8, 2015

Materials Management Plan

Proposed 33rd and Festival Streets
Denver, Colorado

Prepared For:

City and County of Denver
Department of Public Works
201 W. Colfax, Department 506
Denver, Colorado 80202

On Behalf Of:

Tsiouvaras Simmons Holderness, Inc.
5960 DTC Boulevard, Level 3, Suite 345 W
Greenwood Village, Colorado 80111

Pinyon Project No.:

1/15-670-01.8003

Prepared by:

Lindsey Freytag EIT
Environmental Engineer

Reviewed by:

Brian Partington
Principal – Project Delivery

Table of Contents

1. Introduction 1
   1.1 Proposed Action 1
   1.2 Key Parties and Responsibilities 2
   1.3 Previous Environmental Documentation 2
   1.4 Potential Environmental Concerns 4
2. Health and Safety 5
3. Supervisor Requirements and Training 6
   3.1 Supervisor Requirements and Training 6
   3.2 Tier 1 – Front-Line Workers 6
   3.3 Tier 2 – Excavation Workers 7
   3.4 Tier 3 – Other Workers 7
4. Soil Handling Procedures 8
   4.1 Procedures 8
      4.1.1 General Procedures 8
   4.2 Process Flow 9
   4.3 Predetermined Action Levels for Soil Management 11
      4.3.1 Exposure Scenarios 11
      4.3.2 Non-Impacted/Unrestricted Reuse 11
      4.3.3 Impacted-Restricted Reuse 12
      4.3.4 Health Risk – Restricted Reuse or Disposal 12
      4.3.5 Hazardous Waste 13
5. Construction Water Handling Procedures 14
   5.1 Stormwater 14
   5.2 Groundwater 14
      5.2.1 Leachate 15
6. Additional Requirements 16
   6.1 Dust 16
   6.2 Asbestos Containing Material 16
   6.3 Decontamination of Heavy Equipment 16
   6.4 Site Security 16
   6.5 Soil Stockpiles 16
7. Waste Characterization Protocols 18
   7.1 Waste Identification 18
   7.2 20-Times Rule 18
   7.3 Petroleum Hydrocarbons 18
   7.4 Asbestos-Containing Materials 19
   7.5 Slag, Coal, Ash 19
   7.6 Electrical Equipment (PCBs) 19

Table of Contents (continued)

7.7 Cleanup Goals and Regulatory Standards....19
7.8 Groundwater....21
7.9 Other Solid Waste....21
8. Imported Materials....22
8.1 Sample Analysis and Frequency....22
8.2 Imported Fill Documentation....23
9. Reporting....24
10. References....25

Tables

Table 7-1. RCRA 8 Metals Soil Regulatory Limits....20

Appendices

Appendix A Pinyon Limited Phase II Environmental Site Assessment - Multiple Properties

Appendix B Environmental Protection Agency Regional Screening Levels

Appendix C DEH Guidance for Third Party Reuse of Excess Soil from City Projects

Appendix D EPA Toxicity Characteristic Maximum Concentration of Contaminants

Appendix E City and County of Denver – Asbestos-Contaminated Soil Management Standard Operating Procedure

1. Introduction

Pinyon Environmental, Inc. (Pinyon), was retained by Tsiouvaras Simmons Holderness, Inc. (TSH), to prepare this Materials Management Plan (MMP) for the construction of 33rd Street from Brighton Boulevard to Festival Street, and Festival Street from 33rd Street to 35th Street (the Site). This MMP has been developed to assist field operations, particularly construction, in preparing for identification and management of soil and/or groundwater that may contain contamination.

This MMP has been prepared to ensure that work activities will be completed in such a way as to protect human health and the environment, while adhering to the project schedule during construction. Further, this MMP has been prepared to minimize potential delays, and to develop approved standard procedures that will be implemented as needed in the event that regulated materials are encountered during construction. It is the responsibility of the future-selected Contractor (Contractor) to follow all appropriate regulations, obtain the proper permits, and utilize field personnel trained to identify potential contamination.

1.1 Proposed Action

The City and County of Denver (CCOD) will construct two new roadways. The plans include the construction of two lanes of traffic (one in each direction) for each road. The new roads will be 33rd Street and Festival Street. Festival Street will run parallel to Brighton Boulevard from 35th Street to 33rd Street (33rd Street is projected as it doesn't currently exist); Festival Street will be a continuation of the existing Delgany Street. The new 33rd Street will connect Brighton Boulevard to Festival Street. Both sides of 33rd Street and the east side of Festival Street will have new curbs, gutters, and sidewalks, while the west side of Festival street will only have new gutters with a curb along certain portions. This project also includes drainage improvements. These streets are to service adjacent ongoing development along Brighton Boulevard and a CCOD Park near the intersection of Festival and 35th Street. The project corridor is located within CCOD right-of-way (ROW), bounded between Brighton Boulevard on the east, Arkins Court on the west, private development on the south, and 35th Street on the north.

The 3400 Arkins Court property is developed with an approximately 13,336 square-foot warehouse structure constructed in 1955, and is currently vacant. The 1930 35th Street property is developed with an approximately 21,217 square-foot garage building constructed in 1967, which is currently used as a bicycle impound and mechanic shop for the Denver Police Department (DPD) (Pinyon, 2015). The 1812 35th Street property is developed with an approximately 59,700 square-foot building that is currently the Great Divide Barrel Bar.

Groundwater on the Site historically sheet flows from east to west, where it then enters the South Platte River (TSH, 2015). Groundwater was encountered at approximately 21 feet below ground surface (bgs) at the 3301 Brighton Boulevard Property and is expected to fluctuate as proximity to the South Platte increases. Past groundwater studies have shown that groundwater is encountered intermittently in the project area. Given the planned depths of excavation for grading of the roadway, encountering groundwater during project construction is not anticipated.

In general, construction on this project is not likely to require deep excavations. For the most part, shallow grading and subgrade preparation is anticipated to support the construction of the project elements proposed.

1.2 Key Parties and Responsibilities

The key parties, their contact information and project responsibilities, are outlined below:

Organization	Role/Responsibility	Contact Information
City and County of Denver Department of Public Works	City Project Manager	Mark Gehrke Phone: 303-446-3619 Email: mark.gehrke@denvergov.org
TSH	Engineering, Project Management	Randal Lapsley Phone: 303-771-6200 Email: randal.lapsley@tshengineering.com
City and County of Denver, Department of Environmental Health	Environmental Quality Technical Oversight	John Student Phone: 720-865-5432 Email: john.student@denvergov.org
Contractor	Construction	TBD
Environmental Consultant	Environmental oversight quality assurance to identify potentially contaminated soil and potential asbestos	Brian Partington (or TBD) Pinyon Environmental, Inc. 9100 West Jewell Avenue Phone: 303-980-5200 Email: Partington@pinyon-env.com

1.3 Previous Environmental Documentation

Pinyon has previously conducted investigations of the environmental conditions at the Site and produced several relevant reports. These include two Phase II Environmental Site Assessments (ESA), one for 3400 Arkins Court (Pinyon, 2010) and one for multiple locations including 3301 Brighton Boulevard, 3400 Arkins Court, a Coors Field parking lot (Northwest of the intersection of 33rd and Brighton Boulevard), and 1930 35th Street (Pinyon, 2015; Appendix A). The Pinyon 2015 Phase II ESA incorporates sampling and results from the Pinyon 2010 Phase II (3400 Arkins Court). These were conducted as preparation for the 33rd Street Outfall, 33rd Street development, and Festival Street development to investigate subsurface soil and groundwater conditions at the locations for materials management purposes. These Phase IIs were also utilized for the 33rd Outfall Development MMP. Although the Coors Field parking lot was included in the 2015 Phase II ESA, it is not relevant to this project and discussion of those samples are omitted.

The following property summaries are based on a review of other documents and investigations completed along the project area, these include both Pinyon Phase IIs, an interoffice memorandum from the CCOD (CCOD 2012), and a subsurface investigation completed by Casey Resources, Inc. (CRI, 2008).

- **3400 Arkins Court** - Aerial photos indicate the southwest portion of this property was used as an outdoor storage or scrap yard for various materials, equipment, trucks, trailers, and automobiles from

2000 through 2010. Potential residual contaminants in soil and groundwater could include petroleum and metals.

- **West end of 33rd Street Between the South Platte River and Brighton Boulevard –** This area has been used by railroads for a main line and side tracks since 1890 and is known to have been used as an urban fill area. Based on this, contaminants in soil and groundwater could include coal or coal fines, polycyclic aromatic hydrocarbons (PAHs), petroleum hydrocarbons, and metals.

- **3301 Brighton Boulevard** - From 1890 to at least 1904 a dwelling and a storage building occupied the proposed alignment between Arkins Court and Brighton Boulevard. A 1933 aerial photo shows what appear to be tire tracks, disturbed soil, and possibly small piles of materials on the corridor between Brighton Boulevard and the South Platte River. In 1974, a single large pile of unknown material was on the northeast portion of the property and within the alignment of the corridor (1974 aerial photo). Potential residual contaminants in soil and groundwater could include coal fines, PAHs, petroleum hydrocarbons, asbestos-containing materials (ACMs), and metals.

The Pinyon 2015 Phase II consisted of an analysis of three groundwater samples and eight soils samples collected from sampling during 2015, as well as five soil samples and two groundwater samples collected during sampling in 2010. The analysis of these samples are summarized below (Appendix A).

- PAHs were detected above United States Environmental Protection Agency (U.S. EPA) Regional Screening Levels (RSLs) for residential soils at the 3301 and 3330 Brighton Boulevard properties (Appendix A). The historical industrial land uses and past historical filling are the likely sources of these PAHs.

- Arsenic was detected at concentrations that exceeded the Colorado Department of Public Health and Environment (CDPHE) risk management guidance value of 11 milligrams per kilogram (mg/kg) (CDPHE, 2011a). Due to the historical uses of the properties in the area, it cannot be determined whether the arsenic is naturally occurring or due to anthropogenic sources.

- Lead was detected at values that exceeded both the Industrial and Residential RSLs in one soil sample at a discrete location on the 3400 Arkins Court property, but was below both RSLs for the remaining samples.

- Fill material was observed in seven of the eight 2015 soil boring samples; the fill layer depths ranged from four to 15 feet.

- None of the groundwater samples contained volatile organic compounds (VOCs) in concentrations that exceeded groundwater standards, and while several samples contained various analytes at concentrations above the laboratory limits, none exceeded applicable groundwater standards. Uranium was detected in one groundwater sample at concentrations that exceeded the site specific surface water standard which it was evaluated against (Appendix A).

- ACMs were not identified during drilling or test pit sampling events; however, the presence of fill material and building debris, and the heterogeneous distribution of this material, is reason to suspect that ACM could be discovered during construction activities.

Other than the areas noted above, soils and groundwater exceeding the U.S. EPA RSLs for residential and/or industrial soils were not identified during sampling activities. However, it should be noted that observations and sampling were conducted at limited locations; therefore, there is a potential that other areas not directly investigated could result in the Contractor encountering contaminated soils or groundwater.

1.4 Potential Environmental Concerns

In Pinyon's experience completing environmental investigations within the River North (RiNo) district, including on the new roadway alignments, the fill materials that may occur between zero and 15 feet noted above is ubiquitous in the area, and frequently exhibits results in samples containing PAHs and metals that exceed EPA residential and/or industrial screening values, and further, may contain isolated areas with ACMs. Therefore, fill material should be treated as a special solid waste. This MMP has been prepared to assist the Contractor in addressing unexpected subsurface impacts and soils disturbed during construction must be handled in accordance to the procedures detailed in Section 4.

Although Pinyon has assumed that it is unlikely that groundwater will be encountered during this project, due to the possibility of fluctuating water table depths as the proximity to the South Platte River increases the procedures for handling contaminated groundwater have been included in this MMP.

2. Health and Safety

There is a potential for increased risk to the health of workers during excavation at the Site. Awareness by site personnel of these hazards is of the highest priority. Therefore, a Health and Safety Plan (HASP) must be developed by the Contractor. The Contractor's field personnel must conduct work in Level D attire until the Contractor's Health and Safety Officer (HSO) determines that additional protection may be required. The MMP Supervisor will provide the HSO with information, as available, to assist in that determination.

If it is determined that additional protection may be required, staff will be brought on site to continue the work using higher-level personal protective equipment as determined by the Contractor's HSO. Site personnel must be provided with a copy of the HASP for review, and site personnel must be aware of and agree to the HASP requirements. The Contractor will be required to employ the proper personnel, monitoring equipment, and personal protection equipment (PPE) to provide a safe working environment for its employees, consultants and sub-contractors. The provisions of this MMP are summarized below, and will be incorporated into the HASP. However, in no way shall the HASP be limited to these provisions.

- All work will be performed in accordance with the requirements of the Occupational Health and Safety Administration (OSHA), 29 CFR 1910.

- It is the Contractor's responsibility to employ workers with the appropriate level of training (e.g., 24 hours or 40 hours), when implementing this MMP, in accordance with 29 CFR 1910.120 for the task being completed. Workers who may come into contact with potentially contaminated media will provide documentation of appropriate OSHA safety training, in accordance with 29 CFR 1910.120, to the HSO. Any worker who cannot provide training certification will be denied access to the Site.

- If required, personnel monitoring will be performed under the supervision of the health and safety officer.

- No personnel shall enter an excavation unless standard procedures have been followed and hazards have been controlled or eliminated.

3. Supervisor Requirements and Training

The Contractor will be responsible for implementation and maintenance of environmental controls and ensure that:

- Contaminated material that has been disturbed is not reused on-site
- Contaminated material that has been disturbed is not disposed of into storm drains, sanitary sewers, streams, irrigation facilities or waterways
- Non-salvageable, non-hazardous solid waste materials removed by the Contractor are removed from the Site and disposed of at the Denver Arapahoe Disposal Site (DADS) in accordance with local, state and federal laws
- The MMP Supervisor will be qualified to verify implementation of this MMP

3.1 Supervisor Requirements and Training

Prior to implementation of the MMP, the project team will retain an MMP Supervisor in a quality assurance (QA) role to independently verify that the requirements of this plan are adhered to. The MMP Supervisor will be responsible for the following:

- Be a competent individual experienced with chemical-related health and safety (documentation must be maintained on-site)
- Be on-site to verify site operations on an as-needed basis when potentially contaminated media have been encountered
- Verify or perform field screening of soil in adherence to this plan (see Section 7)
- Complete logs thoroughly detailing QA site activities
- Verify adherence to this plan
- Identify unknown soils or materials and implement the MMP.

3.2 Tier 1 – Front-Line Workers

Tier 1 workers include all personnel that would be responsible for mitigating potentially regulated materials. Those workers could include equipment operators and laborers actually handling materials in accordance with this MMP. These workers must:

- Complete work as directed by the MMP Supervisor, and in accordance with this MMP
- Complete work in accordance with the requirements of the Occupational Health and Safety Administration (OSHA), 29 CFR 1910.120. The level or training in accordance with CFR 1910.120 shall be determined and confirmed by the HSO.

3.3 Tier 2 – Excavation Workers

Tier 2 employees include all personnel that could possibly discover hazardous materials during the course of work, but will not be responsible for management of these wastes. These employees include, but are not limited to front-line equipment operators, foremen and operators that will complete typical excavation activities during the project, but will not complete handling of these materials after discovery.

These personnel will be responsible for the following:

- Be trained on identification of hazardous materials by the MMP Supervisor.
- In the event that suspected materials are identified, immediately stop work, and contact the MMP Supervisor of the discovery.
- Complete work in accordance with the requirements of the Occupational Health and Safety Administration (OSHA), 29 CFR 1910.120. The level or training in accordance with CFR 1910.120 shall be determined and confirmed by the HSO.

3.4 Tier 3 – Other Workers

Tier-3 workers include all workers that would not complete sub-surface work activities. As the possibility for "other workers" to encounter hazardous materials on this project is very low, training requirements do not apply.

4. Soil Handling Procedures

Project activities include minimal excavation depths, however the planned excavation could occur in areas where soil with contaminated media could be encountered. Additionally, because of the heterogeneous nature of the soil, it is important that the Contractor be aware of the possibility of encountering other special wastes and know how to manage those special wastes, which is a key purpose of this MMP.

4.1 Procedures

The following procedures will apply to all excavation activities conducted at the project by the Contractor:

- The Contractor will be responsible for providing all necessary equipment and personnel (including health and safety officers, foremen, laborers, etc.) to implement this MMP; and

- The Contractor will be responsible for coordinating with the MMP Supervisor, DADS, the City Project Manager, and the Engineer prior to work commencement, in order to verify that work adheres to the provisions of this MMP.

4.1.1 General Procedures

Although not anticipated, other special wastes could include items such as drums, chemical or fuel containers, batteries, tar, sludge, petroleum-hydrocarbon impacted soil, materials that are hazardous waste, and potential polychlorinated biphenyls (PCBs) containing equipment (transformers, light ballasts, voltage regulators, capacitors and circuit breakers). These materials may be present in small quantities and can be difficult to characterize. Upon identification of special wastes, excavation at that location will cease until additional assessment by the MMP Supervisor can be completed, and the City is contacted. The MMP Supervisor will attempt to assess special wastes, including prudent and safe observation for the following:

- Markings and or labels on containers/drums, condition of the containers/drums (e.g., rust, holes, damage, corrosion) and other indications of contents;

- Indications of unsafe conditions, including swelling drums, leaking, fumes, odors, etc.;

- Conditions of materials associated with the special wastes; and

- Assessment for evidence of release, obtained by utilizing field instruments (i.e. Photoionization detector [PID], combustible gas indicator [CGI] and professional judgment).

Only under the direction of the MMP Supervisor, will handling of any special wastes be completed. When handling is required, the following precautions will be taken:

- Handling will be minimized whenever possible;

- When necessary, handling will be employed by mechanical means including the use of site excavation equipment;

- Pressurized/swelling drums, suspected explosives, potentially shock-sensitive materials or other potentially dangerous items will not be handled until a person with appropriate experience with these situations has been consulted;

- All special wastes will be placed on 6-mil plastic sheeting and covered, until additional assessment has been completed by the MMP Supervisor (the time frame will allow for laboratory testing and obtaining a profile and manifest for disposal);

- All stockpiles of special waste will be covered immediately or containerized, and will remain covered or containerized until final removal;

- Soil stockpiles of potentially contaminated soil or other materials will be limited to a maximum of 500 cubic yards each;

- Implementation of stormwater best-management practices (BMPs) for stockpiles of potentially contaminated material will be completed to prevent potentially contaminated storm water runoff;

- Stockpile areas will be securely fenced to prevent contact with unauthorized personnel and the public;

- Suspicious materials will be further evaluated by the MMP Supervisor (Section 3.1). When additional assessment of this material indicates that the material does not meet applicable regulatory requirements for disposal as a non-hazardous waste, the MMP Supervisor will arrange for off-site disposal at a licensed facility (DADS) as solid waste;

- The material will be characterized and manifests will be obtained before it is disposed off-site, and the material will be disposed as soon as possible;

- Any special wastes that are generated will be managed in accordance with the applicable local, state and federal regulations; and

- Where suspicious material is determined to be non-hazardous by the MMP Supervisor through additional assessment, the material may be disposed as non-hazardous solid waste at DADS.

4.2 Process Flow

The following process-flow chart presents a general flow of procedures that will be followed in the event that suspected contaminated soils are identified.

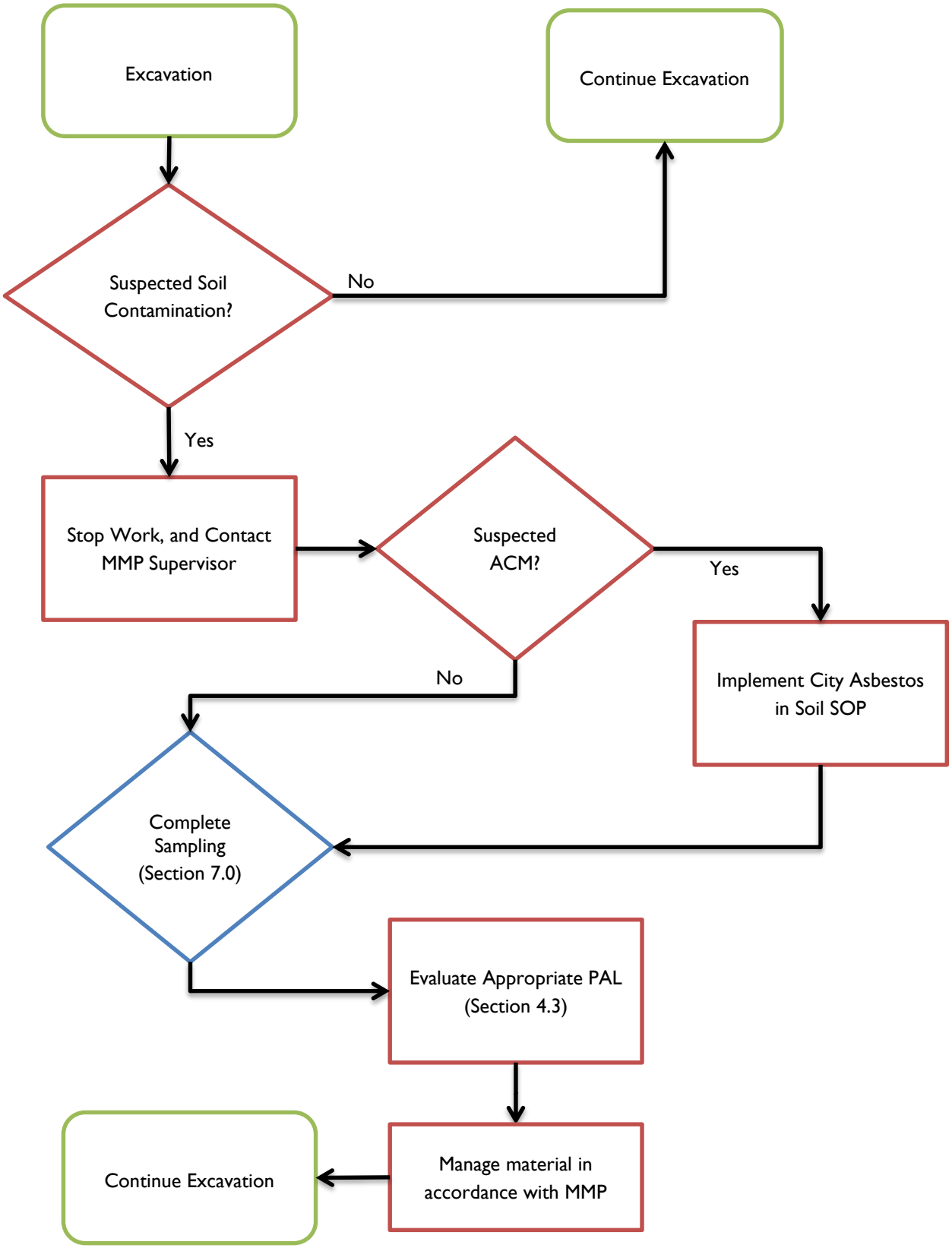
Excavation
Continue Excavation
Suspected Soil Contamination?
No
Yes
Stop Work, and Contact MMP Supervisor
Suspected ACM?
Yes
Implement City Asbestos in Soil SOP
No
Complete Sampling (Section 7.0)
Evaluate Appropriate PAL (Section 4.3)
Manage material in accordance with MMP
Continue Excavation

4.3 Predetermined Action Levels for Soil Management

Predetermined Action Levels (PALs) will be used to determine if the soil generated at this project is acceptable for reuse, or requires transport off-site for disposal at an appropriate landfill. The PALs are based on the CDPHE use of the USEPA Regional Screening Levels (RSLs) for Industrial Soils (EPA, 2015) (Appendix B). RSLs assign numerical contaminant concentrations as preliminary cleanup goals. In addition, CDPHE has provided Risk Management Guidance for Evaluating Arsenic Concentrations in Soil (CDPHE, 2011a). This document in part states that "If arsenic concentrations are lower than 11 mg/kg (the average of the 95% UCLM of background concentrations found by the U.S. EPA in Colorado), and releases of arsenic could not have occurred at the Site, based on historical data or process knowledge, the Division will require no further action to address arsenic in soil."

4.3.1 Exposure Scenarios

CDPHE Groundwater Projection values in conjunction with EPA RSL guidance will be used for comparison to soil data. In additional to the City's guidance for reuse (Appendix C- *Guidance for Third Party Reuse of Excess Soil from City Projects*), the following guidance is applicable for evaluating soil concentrations for varying exposure scenarios:

- **CDPHE Groundwater Protection** – Guidance values were developed by CDPHE to protect groundwater from potentially leachable constituents in soil. For volatile constituents, the CDPHE-Hazardous Materials and Waste Management Division Groundwater Protection Values Soil Cleanup Table (CDPHE, 2014) values will be used for comparison to soil data.

- **EPA RSL Residential Protection** – Soil concentration values that are considered appropriate for residential areas.

- **EPA RSL Worker Protection** – Soil concentration values that are considered appropriate for commercial and industrial properties.

The application of these values for making material handling decision is discussed in the following sections.

4.3.2 Non-Impacted/Unrestricted Reuse

Soils with chemical concentrations within acceptable guidelines for their respective RSLs for residential property and CDPHE groundwater protection values may be reused at on- or off-site locations, assuming the receiving facility has agreed to accept this material. This material must be free from any construction/demolition debris, and free of ACMs. If the soil would be reused at a third party property, procedures and guidance described in Appendix C will be followed.

Detailed documentation of the on- or off-site disposition will be maintained by the MMP Supervisor. Documentation should include:

- Analytical data

- How and where the soils are used on the project

- A reference to the proximity to groundwater

If logistically there is no place to reuse this soil on- or off-site, it may be disposed of at DADS.

4.3.3 Impacted-Restricted Reuse

Soil with chemical concentrations above RSLs for residential property, but below RSLs for worker protection (commercial or industrial property), may be reused at an on- or off-site commercial or industrial property without limitation, assuming:

- The groundwater protection levels have been met
- It is free of construction/demolition debris, including ACMs
- The owner of the receiving property approves it
- The soil is capped with an engineered barrier such as concrete or asphalt

If groundwater protection values have not been met, soil must be placed greater than 10 feet above the static groundwater level.

Soil that is proposed to be used at a City-owned park must meet the requirements noted in Section 4.3.2. Therefore, material that is classified in the Impacted-Restricted Reuse category cannot be reused at a City-owned park.

Soil with chemical concentrations above or below the RSLs for residential use, but below RSLs for industrial (commercial and worker protection) use, which contains some amount of debris (and therefore is considered by CDPHE as a "solid waste"), and which contains no associated asbestos, may be reused at City-owned properties, assuming the groundwater protection levels have been met. If groundwater protection values have not been met, soil must be placed greater than ten feet above the static groundwater level. No reuse of soil which contains debris on non-City owned property is permitted, even if it does not contain asbestos, without obtaining a beneficial reuse designation from the CDPHE (may require additional confirmation sampling to confirm that the soil does not contain chemicals of concern and/or asbestos).

Detailed documentation of the on- and off-site disposition will be maintained by the MMP Supervisor. Documentation should include:

- The analytical data
- How and where the soils are used on the project
- A reference to the proximity to groundwater (must be ten feet above static water level if it does not meet the groundwater protection values)
- Whether clean cover material will be placed above the material

If logistically there is no place to reuse this soil on or off-site, it may be disposed of at DADS.

4.3.4 Health Risk – Restricted Reuse or Disposal

For soils that fall in the health-risk category (above industrial use [commercial or worker protection]), it will be necessary to complete a risk evaluation, compare concentrations to background concentrations, or reuse the soil with an engineered barrier to eliminate exposure. If risk analysis is technically or financially prohibitive, or prolongs the project, landfill disposal should be selected as the mitigation option. The MMP Supervisor should be consulted to recommend additional alternatives.

Generally, soils that fall into this category are as follows:

- Have chemical concentrations that exceed the CDPHE RSLs for Industrial Use
- Are not characteristically hazardous

It is expected that some soils encountered during construction of this project, particularly fill materials that may be encountered between zero and 15 feet, could fall into the health-risk category. The MMP Supervisor will specify how the work is completed in these areas.

4.3.5 Hazardous Waste

If sample analysis indicates that the soil is designated as hazardous waste, the soil will be containerized immediately in a lined roll-off box, labeled, and transported to a designated storage area on-site or off-site pending off-site disposal at a hazardous waste disposal facility. These wastes will be manifested and transported to the disposal facility in accordance with state and federal regulations. Once identified as hazardous waste, this material may not be stored on-site longer than 90 days.

The disposal facility chosen to accept the hazardous waste will be decided based on the location of the materials and the location of an appropriate disposal facility. The Clean Harbors LLC, Deer Trail Landfill is the only facility within Colorado licensed to accept hazardous waste. Facilities in Utah and Texas are the closest other licensed hazardous waste disposal facilities. Transportation and manifestation of these waste materials on public highways, streets, or roadways will be in accordance with 49 Code of Federal Regulations (CFR) and any applicable CDOT regulations.

Note: Certain waste streams are specifically excluded in the Solid Waste Regulations (CDPHE, 2011b). The MMP Supervisor (and as approved by CCOD) will be responsible for ultimate classification for disposal.

5. Construction Water Handling Procedures

Construction water may consist of stormwater, surface water, groundwater, and leachate and will be addressed using the following procedures. Surface water and leachate are not expected to be prevalent during this project.

5.1 Stormwater

The Contractor shall obtain a Colorado Discharge Permit System (CDPS) permit for stormwater discharges associated with construction. The Contractor (or design engineer) shall prepare a stormwater management plan (SWMP) for construction of this project as required by the permit. As part of this SWMP, the Contractor is responsible for water control facilities as required to promptly remove and properly dispose of stormwater that may impact the project site.

5.2 Groundwater

Groundwater that may be encountered during subsurface construction activities will require sampling and analysis prior to discharge as part of the CDPHE-WQCD permitting process. This will be conducted in coordination with the MMP Supervisor and the City. If results of sampling indicate that groundwater has been impacted at concentrations exceeding the appropriate CDPHE surface water standard, **the Contractor must understand that the CDPHE will not allow this water to be discharged into a water of the State without appropriate treatment.** Groundwater that is brought to the surface during construction or excavation dewatering must be immediately containerized for off-site disposal. It is expected for this project that this option will be sufficient. However, if the volume of groundwater generated is such that containment and hauling of the water for off-site disposable is cost or logistically prohibitive, it may be necessary for a discharge permit to be obtained from the CDPHE. This permit could require treatment of water in order to meet the Surface Water Standards. This process is addressed below, but is not expected to be necessary for the volumes of water that will be generated for this project.

It is the responsibility of the Contractor to obtain all applicable CDPHE-WQCD permits for dewatering and discharge of groundwater, and to abide by the requirements of the permit(s). The following are some general provisions; however, any requirements noted on the permit(s) take precedence to this MMP.

- Untested groundwater will not be discharged onto the ground, or into sanitary or storm sewers.

- Water determined to meet discharge standards by the MMP Supervisor may be discharged in accordance with applicable federal, state and local regulations, or may be used on-site for moisture treatment of engineered fill material, or for dust suppression.

- Where concentrations are above permit limits, the water will be either treated on-site or transported off-site and disposed at a licensed treatment facility.

- The MMP Supervisor will discuss treatment and/or disposal options with the City, and the City will provide direction to the Contractor, who will be responsible for water treatment and/or disposal in accordance with the Contractor's approved permits.

- The Contractor may apply for and obtain a CDPS General Permit for Construction Dewatering (COG0700000) from the CDPHE-WQCD if groundwater will require management. This application must be submitted to CDPHE at least 30 days prior to dewatering activities. If the Contractor intends to treat groundwater for discharge into a waters of the State (e.g., South Platte River), it is likely that the Contractor will need to apply for and obtain a Remediation Activities Discharge to Surface Water permit

(COG315000). If so, this application must be submitted at least 45 days prior to the anticipated date of discharge, and must be considered complete by the CDPHE before the CDPHE review and approval process begins. An application for remediation would need to concisely show how the Contractor intends to treat the water to meet the surface-water standards applicable for the discharge. In the case that dewatering activities are required and a permit is obtained, the contractor must prepare a Remediation Activities Management Plan (RAMP) prior to any discharge activities taking place. In accordance with permit procedures, the Contractor shall fill out and submit a monthly DMRs to CDPHE-WQCD for the life of the permit. Copies of monthly submittals shall be provided to the City.

- Water from dewatering operations shall not be directly discharged into any waters of the State, including wetlands, irrigation ditches, canals, or storm sewers, unless allowed by a permit. Unless prohibited by law or otherwise specified in the Contract, the water from dewatering operations shall be contained in basins in locations approved by the engineer, treated for discharge in accordance with the CDPHE-WQCD permit(s), or shall be hauled away from the project for proper disposal in accordance with applicable laws and regulations.

5.2.1 Leachate

It is not anticipated that material excavated during this project will generate significant liquids, as excavation is not expected to exceed two to three feet bgs, and groundwater is expected to be significantly below the depth of excavation for the majority of the project. However, if saturated materials are encountered, stockpile areas will be constructed to drain material before re-use as engineered fill, or transport to DADS (assuming it is impacted). Generated liquids will drain to a central sump. The sump will be excavated into the ground and sloped to a central location. It will also be lined with 6-mil polyethylene sheeting, and have a layer of gravel to hold the sheeting in place. A berm will be placed around the sump to prevent surface water from commingling with the generated leachate water. Liquids accumulated within the sump will be submitted for analysis by the Contractor and coordinated with the MMP Supervisor. If constituents in the water exceed the CDPHE-WQCD permit limits, the water will be disposed off-site using appropriate profiling and manifesting or treated and discharged in accordance with the permit(s). Solid waste which has been drained or mixed must pass the paint filter test prior to disposal at DADS by U.S. EPA Method 9095A.

6. Additional Requirements

6.1 Dust

In accordance with 5 CCR 1001 – Air Quality Control Commission (AQCC) Regulations, the Contractor will obtain an Air Pollution Emissions Notice (APEN) and Application for Construction Permit. The Contractor will implement best management practices to minimize dust, such as the following:

- The Contractor shall conduct construction operations and take all necessary reasonable measures to eliminate or minimize raising dust resulting from any stored materials, equipment or operations used during construction of the work.

- Blowing dust and airborne particulates shall be controlled by wetting or other means, if approved by the Project Manager. Dust control agents shall be applied in accordance with manufacturer's recommendations.

- The Contractor shall provide and apply dust control at all times, including holidays and weekends, as required to abate dust nuisance on and about the Site that is a direct result of construction activities. The Contractor shall be required to provide sufficient quantities of equipment and personnel for dust control sufficient to prevent dust nuisance on and about the Site.

6.2 Asbestos Containing Material

If suspected ACM containing materials are encountered, including buried utilities, workers must comply with Section 5.5 of the Solid Waste Regulations, or Regulation No. 8 of the Air Quality Control Commission Regulations (see Section 7.4). This would include notification to the Engineer immediately.

6.3 Decontamination of Heavy Equipment

Equipment that has come into contact with special waste as identified by the MMP Supervisor will be decontaminated prior to leaving the project site to prevent potentially contaminated material from being spread off-site. Gross removal of material from equipment will be completed using hand tools such as shovels, brooms and brushes. If the MMP Supervisor finds it necessary, more thorough decontamination may be required such as pressure washing. Spent decontamination water will be collected in basins and pumped into water containers. The Contractor will be responsible for analyzing the waste-water and working with the City to determine final disposal options in accordance with all applicable federal, state and local regulations.

6.4 Site Security

The Contractor will be responsible for maintaining effective project access control.

6.5 Soil Stockpiles

If soils require stockpiling due to the presence of potentially contaminated materials or construction/urban fill debris with possible asbestos, the material must be placed on and covered with 6-mil plastic. Stockpiles must have erosion control measures in place to reduce the amount of soil transported by wind and runoff. Best management practices (BMPs) to mitigate potential stockpile erosion include:

- Minimizing the amount of soil disturbed at one time

- Prevent runoff from off-site areas from flowing across disturbed areas
- Slow down the runoff flowing across the Site
- Remove sediment from on-site runoff before it leave the Site

7. Waste Characterization Protocols

The following presents protocols to characterize special and/or suspicious waste, which have not been previously characterized for disposal. When potentially contaminated material is encountered, the Contractor and MMP Supervisor will be responsible for coordinating with the City for sampling, waste profiling, and agency notifications. The Contractor and MMP Supervisor will be responsible for evaluating special wastes (for disposal purposes) in accordance with 6 CCR 1007-3, Section 262.11., and in accordance with all other applicable federal, state and local regulations. This evaluation must identify whether the wastes are characteristic or listed hazardous wastes.

7.1 Waste Identification

For the purpose of this MMP, soils generated during construction of the project will be assumed to meet the Non-Impacted/Unrestricted Reuse PAL (Section 4.3.2), if it meets **all the following conditions**:

- Soil consists of either natural soils, or engineered fills such as roadway fill;
- There is no visual or olfactory indication of contamination (e.g., staining, streaking, odor), or if field screening results (PID) are less than 25 units above background conditions; and
- There is no indication of the presence of solid waste (e.g., foreign materials including demolition debris, municipal solid waste, coal ash, slag).

7.2 20-Times Rule

Waste Management (the operator of DADS) will accept solid material where concentrations are less than 20 times the hazardous listing for characteristic waste (20 Times Rule), except for PCBs as discussed in Section 7.6. The EPA Toxicity Characteristic Leaching Procedure (TCLP) Maximum Concentrations of Contaminants is presented as Appendix D. As an example, the regulatory level of lead (a RCRA regulated metal) is 5.0 milligrams per liter (mg/L) when analyzed by TCLP. The Waste Management acceptable limit, when analyzed by totals analysis, would then be less than 100 mg/kg, using the 20 Times Rule. If concentrations of any contaminant exceed the 20 Times Rule by totals analysis, then analysis for TCLP is required. If the TCLP results exceed the toxicity characteristic maximum concentration (Appendix D) then the material would require disposal at a hazardous waste disposal site in accordance with CDPHE requirements.

If final analytical results are below 20 Times Rule concentrations, the material then may be transported to DADS for disposal as non-hazardous solid waste. If the material exceeds regulatory levels, then hazardous waste disposal will be required, in accordance with all applicable regulations.

7.3 Petroleum Hydrocarbons

Petroleum hydrocarbons could potentially be encountered during construction of this project as a result of local industrial uses. If the Contractor or MMP Supervisor classifies materials (using PID, odor, staining, etc.) as potentially impacted by petroleum hydrocarbons, the material will be segregated as previously discussed in Section 4.1. If this material has not been previously profiled, one composite sample of soil for every 500 cubic yards of stockpiled soil will be acquired the MMP Supervisor, and will be analyzed for:

- VOCs using EPA Method 8260
- RCRA eight metals using EPA Method 6010/7471

- Total petroleum hydrocarbons (TPH) (diesel and gasoline range) by EPA Method 8015B
- PCBs using EPA Method 8082
- Reactivity, Corrosivity, and Ignitability (SW846)

If material appears to be consistent based on field evaluation techniques, the 500 cubic yard requirement may be adapted, as approved by DEH.

7.4 Asbestos-Containing Materials

Asbestos-containing materials will be characterized and managed accordance with the City's Asbestos-Contaminated Soil Management Standard Operating Procedure (CCOD, 2010; Appendix E).

7.5 Slag, Coal, Ash

If slag, coal, or ash is identified, then the material will be tested for:

- VOCs by EPA Method 8260
- PAHs by EPA Method 8270
- PCBs using EPA Method 8082
- RCRA eight metals using EPA Method 6010/7471
    - Samples should be placed on hold for analysis of the TCLP pending the results of totals analysis
- Reactivity, Corrosivity, and Ignitability (SW846)

7.6 Electrical Equipment (PCBs)

If any potential electrical equipment suspected of containing PCBs is identified, it will be segregated, tested and, depending on PCB concentrations, delivered off-site for disposal at a PCB-permitted disposal facility, if necessary. Until testing is completed, any of this electrical equipment visually identified during excavation will be assumed to contain PCBs. Equipment not determined to contain PCBs may then be disposed as solid waste, or recycled. Waste Management will accept materials where PCB concentrations are less than 50 parts per million. If this material will be disposed at DADS, the MMP Supervisor will work with the City to complete a WM PCB Certification, which must include copies of analytical reports confirming the PCB concentrations.

7.7 Cleanup Goals and Regulatory Standards

Concentrations of metals will be compared by the MMP Supervisor to the Industrial RSL, and the PALs as discussed in Section 4.3. If off-site disposal is required at a licensed Subtitle D landfill (DADS), the 20-Times Rule and the Hazardous Material Limit will be evaluated. The following table presents these standards for the RCRA eight metals:

Table 7-1. RCRA 8 Metals Soil Regulatory Limits

Metal	RSLs (milligrams per kilogram)		20 Times Rule (milligrams per kilogram)	Hazardous Material Limit (milligrams per liter)
	Resident	Industrial		
Arsenic[1]	11		100	5.0
Barium	1,500	22000	2,000	100
Cadmium	7.0	98	20	1.0
Chromium	12,000	180000	100	5.0
Lead	400	800	100	5.0
Mercury	2.3	35	4.0	0.2
Selenium	39	580	20	1.0
Silver	39	580	100	5.0

[1] - *In Colorado, arsenic occurs naturally, and often at concentrations greater than the RSLs. The CDPHE recently released guidance related to evaluating arsenic concentrations in soil, specifically regarding screening data collected from sites where historical use does not indicate the potential for arsenic contamination (CDPHE, 2011a). The guidance is based on the collection of over 2,700 samples from 44 counties in Colorado. The average concentration of arsenic in soils based on this sampling was 11 mg/kg. The CDPHE has adopted a policy that if arsenic concentrations are lower than 11 mg/kg, and releases of arsenic could not have occurred at the Site, the CDPHE will require no further action to address arsenic in soil. Ultimate concurrence regarding this concentration must be provided by the CDPHE for decision-making purposes regarding disposal of material generated during construction at this project.*

Regarding corrosivity, the limits in the samples collected will be between 2.0 and 12.6 pH units. The material must not be reactive, and the ignitability limit is 140°F.

The Subtitle-D landfill that may be utilized for waste disposal is the DADS, located at 3500 South Gun Club Road, Aurora, Colorado.

If the material is, as evidenced through analytical testing, determined to be characteristically hazardous, the material should be transported to Deer Trail Landfill operated by Clean Harbors Environmental at 108555 East Highway 36 in Deer Trail, Colorado. Additional coordination with the City will be required in this event. It may be possible to have CDPHE identify slag (if encountered) on the project as Bevill excluded wastes; however, additional coordination may be necessary.

7.8 Groundwater

If groundwater will require discharge, it must be analyzed for all constituents required by the CDPHE-WQCD-issued permit(s), and the results compared to the permit limits prior to discharge. All reporting requirements (and other conditions), must also be met by the Contractor.

7.9 Other Solid Waste

Other types of waste are not anticipated to be discovered during construction of this project. However, if encountered, the MMP Supervisor will coordinate with the City Environmental Manager to select analytical methods appropriate for characterizing that material in accordance with the U.S. EPA Method SW846.

8. Imported Materials

Any soils, including embankment and/or topsoil, brought to the Site must meet the Non-Impacted/Unrestricted Reuse PAL as described above in Section 4.3.2.

For each source of imported embankment or topsoil:

- The Contractor shall assure and certify that unacceptable levels of hazardous waste and substances, including but not limited to those defined in the 40 CFR Part 261 Subparts C and D, and the Comprehensive Environmental Response, Compensation, and Liability Act (CERCLA), Section 101(14) as amended, are not incorporated into the project as a result of importing embankment or topsoil materials.

- The Contractor shall submit such certification to the Department of Environmental Health and Project Manager, signed and stamped (or sealed) by one of the following:

    - A qualified environmental consultant

    - Certified industrial hygienist (CIH)

    - Certified hazardous materials manager (CHMM)

    - Registered professional engineer (PE)

    - Certified Safety Professional (CSP)

    - Registered Environmental Manager (REM)

- Additionally, the material must be visually evaluated by a Certified Asbestos Building Inspector, and be determined free of any confirmed or suspected ACMs, solid waste, debris, and demolition materials.

If Contractor source material for embankment or topsoil, originating outside of the project limits, is placed at the project and is at any time found to be contaminated with unacceptable levels of hazardous waste or substances, the Contractor shall remove the contaminated material from the project, dispose of it in accordance with applicable laws and regulations, and make necessary restoration.

The cost of complying with these requirements, including sampling, testing, and corrective action by the Contractor, will not be paid for separately, and shall be included in the work.

8.1 Sample Analysis and Frequency

Representative samples of proposed import fill shall be collected at a frequency of every 1,000 cubic yards. Samples shall be analyzed for the following constituents:

- VOCs by EPA Method 8260

- PAHs by EPA Method 8270

- RCRA eight metals using EPA Method 6010/7471

The City DEH may adjust the frequency of sample analysis, and analysis requirements.

8.2 Imported Fill Documentation

Certification documentation shall be provided to the City Project Manager and DEH for approval prior to being brought to the project site.

9. Reporting

Upon project completion, the MMP Supervisor will prepare a summary report detailing the work performed at the project specifically related to the implementation of this MMP. The report will include the following:

- Property description
- Work description
- Copies of all field logs which detail daily operations
- Summary of analytical results
- Copies of all analytical reports
- Waste manifests for all solid waste, soil, water or other material transported off-site for disposal
- Maps showing the locations of site features related to this MMP, including sample locations, location of wastes discovered, and any other important features identified during the course implementation of this MMP
- Representative site photographs detailing work performed
- Any other documentation detailing important features related to this project

10. References

CCOD, 2010. "Asbestos-Contaminated Soil Management Standard Operating Procedure." Prepared by the City and County of Denver, Department of Environmental Health, December 3, 2010.

CDPHE, 2011a. "Risk Management Guidance for Evaluating Arsenic Concentrations in Soil." Colorado Department of Public Health and Environment, Hazardous Materials and Waste Management Division, June 2011.

CDPHE, 2011b. "Regulations Pertaining to Solid Waste Disposal Sites and Facilities, 6 CCR 1007-2, Part 1." Prepared by the Colorado Department of Public Health and Environment, Hazardous Waste Unit, August 22, 2011.

CDPHE, 2014. "Groundwater Protection Values Soil Cleanup Table." Colorado Department of Public Health and Environment, Hazardous Materials and Waste Management Division, March 2014.

CRI, 2008. "Additional Subsurface Investigation Report for 3330 to 3390 Brighton Boulevard." Prepared by Casey Resources, Inc., September 8, 2008.

EPA, 2003. "EPA Superfund Record of Decision: Vasquez Blvd. & I-70, EPA ID: COD002259588 OU 1, Denver, Colorado." prepared by the U.S. Environmental Protection Agency, September 25, 2003.

EPA, 2015. "Regional Screening Level Summary Table." United States Environmental Protection Agency, June 2015.

Pinyon, 2014a. "Evaluation of Historical Uses and Recognized Environmental Conditions: Brighton Boulevard Right of Way between 29th Street and 35th Street." Pinyon Environmental, May 2014.

Pinyon 2015b. "Evaluation of Historical Uses and Recognized Environmental Conditions: Brighton Boulevard Right of Way between 35th and 44th." Pinyon Environmental, August 2014.

TSH, 2015. "Preliminary Hydraulic Design Report for City and County of Denver 33rd Street and Festival Street". Tsiouvaras Simmons Holderness, Inc., October 9, 2015.

Appendix A Pinyon Limited Phase II Environmental Site Assessment - Multiple Properties

Appendix B Environmental Protection Agency Regional Screening Levels

Appendix C DEH Guidance for Third Party Reuse of Excess Soil from City Projects

Appendix D EPA Toxicity Characteristic Maximum Concentration of Contaminants

Appendix E City and County of Denver – Asbestos-Contaminated Soil Management Standard Operating Procedure

APPENDIX B

DENVER
THE MILE HIGH CITY

CONNECT WITH US | 311 | POCKETGOV.COM | DENVERGOV.ORG | DENVER 8 TV

Pre-Dig Checklist for Contractors

INFORMATION	
Project	
Project Name	
Telephone number:	
Superintendent or Project Manager	

	CHEC LIST	ES	NO	N A
☐	City Project Inspector and Project Manager were notified a minimum of 10 days in advance of any soil disturbing activities.			
☐	Contractor's has posted the DIG SAFE Poster in trailer.			
☐	Does the project have a Contractor's field representative has read the project specific Health and Safety Plan?			
☐	If yes, Contractor has hired a Health and Safety Officer and he/she has reviewed the project specific Health and Safety Plan .			
☐	If no, Contractor's field representative has read the City and County of Denver's Safety and Health Manual.			
☐	If there is reasonable suspicion that ACS (Asbestos-Contaminated soil) or ACM (Asbestos containing materials) may be encountered during soil disturbing activities, the Contractor has hired a Certified Asbestos Building Inspector (CABI) who will be present for all soil disturbing activities.			
☐	The Contractor has verified that all field personnel has completed Asbestos Awareness Training.			
☐	The Contractor's field representative Tailgate training completed with all personnel associated with trenching or digging.			

APPENDIX C

Final

Geotechnical and Pavement Investigation Report

33rd Street and Festival Street

Denver, Colorado

Yeh Project No.: 215-094

December 1, 2015

Prepared for:

Tsiouvaras Simmons, Holderness, Inc.
Attn: Randal Lapsley, P.E.
5690 DTC Boulevard, Suite 345W
Greenwood Village, Colorado 80111

Prepared by:

Yeh and Associates, Inc.
2000 Clay Street, Suite 200
Denver, Colorado 80211

Phone: 303-781-9590
Fax: 303-781-9583

Yeh and Associates, Inc.
Consulting Engineers & Scientists

Final

Geotechnical and Pavement Investigation Report

33rd Street and Festival Street

Denver, Colorado

Yeh Project No.: 215-094

December 1, 2015

Prepared by:



T. Samuel Holder, P.E.
Senior Project Manager

Reviewed by:

Robert F. LaForce, P.E.
Senior Materials Manager

Yeh and Associates, Inc.
Consulting Engineers & Scientists

Table of Contents

1. PURPOSE AND SCOPE OF STUDY 1
2. PROPOSED CONSTRUCTION 1
3. GEOLOGICAL SETTING AND SITE CONDITIONS 2
3.1 SURFACE SITE CONDITIONS 2
4. SUBSURFACE INVESTIGATION 2
4.1 FIELD EXPLORATION 2
4.2 LABORATORY TESTING 3
5. SUBSURFACE CONDITIONS 4
5.1 GROUNDWATER 4
6. PAVEMENT RECOMMENDATIONS 5
6.1 DESIGN ASSUMPTIONS AND INPUTS 5
6.2 TRAFFIC LOADING 5
6.2.1 33RD STREET 5
6.2.2 FESTIVAL STREET 5
6.3 RECOMMENDED HACP PAVEMENT THICKNESS 5
6.3.1 33RD STREET 5
6.3.2 FESTIVAL STREET 6
6.4 HMA MIX AND BINDER RECOMMENDATIONS 7
7. EARTHWORK 7
7.1 SITE PREPARATION 7
7 2 DRAINAGE CONSIDERATIONS 9
8. CORROSION 9
9. REFERENCES 10
10. LIMITATIONS 10

List of Figures

FIGURE 1 BORING LOCATION PLAN SHEET 11

List of Tables

TABLE 1 RECOMMENDED PAVEMENT STRUCTURAL THICKNESS 33RD STREET 6
TABLE 2 RECOMMENDED PAVEMENT SECTION FESTIVAL STREET 6

List of Appendices

APPENDIX A BORING LOGS
APPENDIX B LABORATORY TEST RESULTS
APPENDIX C PAVEMENT DESIGN CALCULATIONS
APPENDIX D GEOCAL REPORT

1. PURPOSE AND SCOPE OF STUDY

This report presents the results of our geotechnical engineering investigation and pavement design for the proposed design of 33rd Street from Brighton Boulevard to Festival Street and Festival Street from 33rd to 35th Street in Denver Colorado.

The City plans to design and construct a roadway generally along the 33rd Street alignment to re-establish the grid and enhance access and connectivity between Festival Street and Brighton Boulevard.

In addition, the City plans to design and construct Festival Street from 33rd Street to 35th Street to enhance roadway connectivity in the area and facilitate access to the proposed River North Park (RiNo).

The geotechnical investigation consisted of geologic reconnaissance and exploratory test hole drilling to investigate subsurface conditions. Test hole drilling was observed by a representative of Yeh and Associates. Samples obtained during the field explorations were examined by the project personnel and representative samples were subjected to laboratory testing to determine the engineering characteristics of materials encountered. This report summarizes our field investigation, the results of our analysis and our conclusions and recommendations based on the proposed construction, site reconnaissance, subsurface investigation and results of the laboratory testing.

The study was performed in accordance with our proposal dated February 25, 2015 and your notice to proceed.

2. PROPOSED CONSTRUCTION

Based on preliminary plans provided by TSH dated August 25, 2015, the proposed improvements consist of constructing 33rd Street from Brighton Boulevard to Festival Street. The new street will consists of 2 paved lanes, curb and gutter, and concrete sidewalks on both sides of the street.

The proposed Festival improvements consist of new alignment with up to 5 feet grade raise, 2 paved lanes and a concrete sidewalk on the south side of the street. The new roadway follows a recently installed storm sewer.

3. GEOLOGICAL SETTING AND SITE CONDITIONS

According to the Geological Map of the Greater Denver Area Front Range Urban Corridor Colorado by Donald Tremble and Michael Machete, 1979, geologically, the project area is located in the Post Piney Creek and Piney Creek Alluvium (Q_P). Its age is Upper Holocene consisting of gravel, sand, silt and clay of modern stream flood plain and slightly older low terraces less than 20 feet above stream bed.

Bedrock underlying the surface units is anticipated to consist of the Denver Formation of Paleocene Upper Cretaceous age. The Denver Formation within this area has been reported to include silty claystone and sandy siltstone, interbedded within lenticular beds of tuffaceous sandstone and pebble conglomerate.

3.1 Surface Site Conditions

The project is located in an old commercial area being converted to residential (multi-family housing and park land). As shown in Figure 1, currently the area has mostly been cleared and the ground disturbed. The existing ground appears to slope on about 5 - 10% grade from the proposed Festival Street to Atkins Court. From Festival Street to Brighten Boulevard, the grade appears to be relatively level.

The area is bordered on the west by Atkins Court which follows the South Plate River and on the east by Brighten Blvd., on the south by the proposed 33rd Street and on the north by 35th Street.

From the preliminary plans provided by TSH the area west of Festival Street for 400 feet from intersection with 33rd will be multi-family homes. From there to 35th Street will be the proposed RiNo Park. On the east of Festival Street will be a large parking lot accessing both Brighten Blvd and Festival Street. North of the parking lot additional park facilities are planned. It appears that most of the area will be converted to a park with some residual, commercial properties remaining north of 33rd and south of 35th Streets.

4. SUBSURFACE INVESTIGATION

4.1 Field Exploration

The subsurface conditions along 33rd Street were explored by drilling 3 borings along the proposed alignment on September 17, 2015. Festival Street was not explored because of the

recently constructed storm sewer along the proposed alignment per direction by the city. Festival Street was previously explored by GEOCAL and documented by their May 11, 2015 Letter Report. GEOCAL's report is in Appendix D.

Borings were drilled with a truck mounted CME 45 drill rig owned and operated by Old Dirt Drilling of Denver Colorado. The borings were advanced using 4-inch diameter solid-stem augers. The borings were located and marked in the field by Yeh and Associates personnel.

Bulk (grab) samples were obtained of the soils encountered from a depth of approximately 1 to 5 feet below the existing ground. Penetration resistance measurements were taken by driving a California sampler into the subsurface materials with a 140-pound hammer falling 30 inches using a cathead and rope. Similar to ASTM D1586, "Standard Test Method for Standard Penetration Test (SPT) and Split Barrel Sampling of Soils", the penetration resistance value (N) is a useful index to evaluate the consistency and relative density or hardness of the materials encountered. The number of blows required to drive the sampler 12 inches, or a fraction thereof, constitutes the N-value as shown on the boring logs.

Representative bulk samples of the soils were collected from selected borings. The collected samples were transported to our laboratory where they were examined by the project engineer and a program of laboratory testing was prepared. Groundwater was not encountered in pavement borings at the time of the site exploration. The Boring Logs are presented in Appendix A.

4.2 Laboratory Testing

A total of 11 soil samples from driving lane borings were tested in the laboratory to determine the classification and engineering properties of the materials encountered in the borings. The testing was conducted in general accordance with recognized test procedures, primarily those of the American Society for Testing and Materials (ASTM) and American Association of State Highway and Transportation Officials (AASHTO). Laboratory tests performed included gradation analysis (AASHTO T-27), Atterberg limits (T-89 and T-90), R-value (T-190), natural moisture content (T-265 and T-204) consolidation/swell ASTM D4546, and soil classification (M-145).

5. SUBSURFACE CONDITIONS

A total of three (3) classification tests (gradation analyses and Atterberg limit) were performed on bulk samples obtained within the top 5 feet of the borings. Two (2) of the bulk samples taken from 1 to 5 feet depth had soil classifications of A-1-b (0), and one sample was classified as A-2-6 (1). In addition, 7 classification tests were performed on California Samples obtained from 2 to 11 feet of the boring. Two (2) had soil classifications of A-1-b (0), two (2) were classified as A-2-4 (0), one A-2-6 (0), one A-6 (16), one A-7-6 (5) and one A-7-6(36).

A swell test (ASTM D4546 at 200 psf) was conducted on the claystone bedrock encountered from 8 to 11 feet in Boring YA-F-1. The percent swell at 200 psf measured 3.8%. According to MGPEC Table 5.2.1, *Treatment and Depth for Swell*, treatment is not required for swell less than 4% on residential street with a design speed of less than 35 mph. If this material is excavated and reused, it shall not be placed in the upper 5 feet of pavement support.

The material descriptions and laboratory test results were used for the analyses and the development of pavement recommendations.

Details of laboratory test results are presented in Appendix B and they are integrated with the boring logs in Appendix A.

The subsurface conditions along the alignment are shown on the boring logs in Appendix A. The subsurface materials encountered in the borings primarily consist of silty sand/clayey sand fill. The fill included varying amounts of sand, silt, gravel, clay, bricks, plastic, slag and claystone to depths of 11 feet with samples containing 0 to 24 percent gravel.

5.1 Groundwater

Groundwater was not observed in the test boring at the time of field exploration, nor when checked immediately after drilling. These observations represent only current groundwater conditions, and may not be indicative of other times, or at other locations. Groundwater levels should be expected to fluctuate with varying seasonal and weather conditions.

6. PAVEMENT RECOMMENDATIONS

6.1 Design Assumptions and Inputs

R-value test resulted in a value of 34 from Boring YA-F-3. A value of 14 was reported in GEOCAL's report along Festival Street. However, considering in the interim a storm sewer has been constructed along Festival Street and backfilled with structural backfill a higher R-value is may be appropriate. Considering we were directed to not conduct a pavement investigation along Festival Street it was not possible to verify that the full width of the subgrade has the higher R-Value. Therefore an R-Value of 34 was selected for 33rd Street and 14 for Festival Street for pavement design.

6.2 Traffic Loading

Because both of these proposed streets are new, the remaining commercial building main access will be from either 35th Street or Brighton Blvd. and the nature of future traffic will be more similar to residential traffic with low volumes of trucks or buses. We used the Residential default Asphalt Pavement Design Criteria in City and County of Denver Standard Drawing number 12.6 of ESALS = 70,000 +80 times the number of new dwelling units to be constructed.

6.2.1 33rd Street

Considering there maybe additional multi-family dwelling constructed on the south side of 33rd Street we conservatively estimated the number of dwellings to be 3,000. Entering these values into MGPEG resulted in a computed ESALS of 302,000.

6.2.2 Festival Street

The development adjacent to Festival on the west is called Cardona and 24 condo type buildings are planned. On the east side of Festival, the Great Divide plans to have a parking lot with approximately 70 stalls. Therefore we conservatively estimated the number of dwellings to be 1,500. Entering these values into MGPEG resulted in a computed ESALS of 182,000.

6.3 Recommended HACP Pavement Thickness

6.3.1 33rd Street

Inputting an R-value of 34 and a soil classification of A-2-4 (sand) into the MGPEC computer program with a traffic classification as Residential, the number of residential homes as 3,000

(computed ESAL value of 302,000) results in recommended structural thicknesses presented in Table 1. Output for the program is presented in Appendix C.

Table 1 Recommended Pavement Structural Thickness 33rd Street

Pavement Type	Aggregate Base Course (in)	Pavement Thickness (in)	Total Thickness (in)	Structural Number
Full Depth HMA	0	7.5	7.5	3.3
Composite[1] HMA and ABC	4	6.5	10.5	3.46
Portland Cement Concrete Pavement	4	6	10	na-

[1] The composite structural thickness was calculated by using CDOT's recommended structural layer coefficients of 0.44 for hot mix asphalt and 0.15 for class 6 aggregate base courses.

6.3.2 Festival Street

Inputting an R-value of 14 and a soil classification of A-2-4 (sand) into the MGPEC computer program with a traffic classification as Residential, the number of residential homes as 1,500 (computed ESAL value of 182,000) results in recommended structural thicknesses presented in Table 2. Output for the program is presented in Appendix C.

Table 2 Recommended Pavement Section Festival Street

Pavement Type	Aggregate Base Course (in)	Pavement Thickness (in)	Total Thickness (in)	Structural Number
Full Depth HMA	0	7.5	7.5	3.3
Composite[1] HMA and ABC	4	6.5	10.5	3.46
Portland Cement Concrete Pavement	4	6	10	na-

[1] The composite structural thickness was calculated by using CDOT's recommended structural layer coefficients of 0.44 for hot mix asphalt and 0.15 for class 6 aggregate base courses.

6.4 HMA Mix and Binder Recommendations

Using the Required Asphalt Materials Table in City and County of Denver Standard Drawing Number 12.6, the following asphalt materials by lift are recommended:

Top Lift Asphalt Mix	Grading SX (½) inches nominal aggregate size
• Mix Design Gyrations	N=75
• Asphalt Binder Grade	PG 64-22
Lower lifts Asphalt Mix	Grading S (¾) inches nominal aggregate size
• Mix Design Gyrations	N=75
• Asphalt Binder Grade	PG 64-22

7. EARTHWORK

The following presents recommendations for site preparation, excavation, subgrade preparation and placement of engineered fills on the project.

Earthwork on the project should be observed and evaluated by a registered professional engineer. The evaluation of earthwork should include observation and testing of engineered fills, subgrade preparation, and other geotechnical conditions exposed during the construction of the project.

7.1 Site Preparation

Strip and remove existing vegetation and other deleterious materials from proposed pavement areas. All exposed surfaces should be free of mounds and depressions, which could prevent uniform compaction.

Stripped materials consisting of vegetation and organic materials should be wasted from the site or used to revegetate landscaped areas or exposed slopes after completion of grading operations.

If fill is placed in areas of the site where existing slopes are steeper than 5:1 (horizontal:vertical), the area should be benched to reduce the potential for slippage between existing slopes and fills. Benches should be wide enough to accommodate compaction and earth moving equipment and to allow placement of horizontal lifts of fill.

Demolition of the existing buildings should include complete removal of all foundation systems within the proposed construction area. This includes removal of any loose backfill found adjacent to existing foundations. Materials derived from the demolition of existing structures and pavements should be removed from the site and should not be allowed for use in any on-site fills.

Although evidence of fills or underground facilities such as septic tanks, cesspools, basements and utilities was not observed during the site reconnaissance, such features could be encountered during construction. If unexpected fills or underground facilities are encountered, such features should be removed and the excavation extended to native materials prior to backfill placement and/or construction. Evaluation for asbestos containing materials may also be necessary depending on the nature of the facility or fill.

Based upon the subsurface conditions encountered, subgrade soils exposed during construction are anticipated to be relatively stable. However, the stability of the subgrade may be affected by drainage, precipitation, repetitive construction traffic and other factors. If unstable conditions are encountered or develop during construction, stability may be improved by scarifying and drying the subgrade soils. Overexcavation of wet zones and replacement with granular materials may be necessary. Use of lime, fly ash, kiln dust, cement or geotextiles could also be considered as stabilization techniques. Laboratory evaluation is recommended to determine the effect of chemical stabilization on subgrade soils prior to construction.

Clean on-site soils or approved imported materials may be used as fill material. On-site high-plasticity soils, claystone bedrock are not recommended for use as compacted fill.

Imported soils (if required) should be granular soils with no more than 35 percent passing the No. 200 sieve and having a Liquid Limit of no more than 30 and a Plasticity Index of no more than 15. Import fill material should be reviewed by the geotechnical engineer prior to importing to the site.

Engineered fill should be placed and compacted in horizontal lifts, using equipment and procedures that will produce a uniform fill with the recommended moisture contents and densities throughout the lift. Recommended compaction criteria for engineered fill is 95 percent of the maximum dry density (ASSHTO T99).

Prior to placing the pavement section, the subgrade should be scarified to a depth of 12 inches, adjusted to a moisture content between optimum and 2 percent above optimum moisture content and compacted to 95 percent of the maximum modified Proctor density.

The entire pavement subgrade should be proof rolled with a heavily loaded pneumatic-tired vehicle (minimum 18 kips per axel) after preparation. Pavement design procedures assume a stable subgrade. Areas that deform under heavy wheel loads are not stable and should be removed and replaced to achieve a stable subgrade prior to paving. We recommend that proof rolling and subgrade compaction tests be inspected and approved by a representative of the geotechnical engineer prior to placing any pavement.

7 2 Drainage Considerations

The collection and diversion of surface drainage away from paved areas is critical to the satisfactory performance of the pavement. Proper drainage design should include prevention of ponding of water on or immediately adjacent to pavement areas. All landscape sprinkler heads adjacent to pavement areas should be frequently checked for leaks and maintained in good working order. Over-spray from sprinklers should be minimized. Concentrated runoff should be avoided in areas susceptible to erosion. Slopes and other stripped areas should be protected against erosion by re-vegetation or other methods

8. CORROSION

The concentration of water-soluble sulfates measured in the laboratory on a representative soil sample was 0.02 percent. This concentration of water-soluble sulfates represents a Class 0 degree of sulfate attack on concrete exposed to these geologic materials. The degree of attack is based on a range of Class 0 (negligible) to Class 3 (very severe) as described in the American Concrete Institute (ACI) Standard 201.2R, “Guide to Durable Concrete”. Therefore, Type I Portland cement is suitable for concrete placed on or into the site soils.

The pH, chlorides and electrical resistivity were determined for selected samples. Test results measured a pH value of 9 (considered basic) and Chlorides measured 0.0021%. Minimum resistivity measurement was 1548 ohm-centimeters. A qualified corrosion engineer should review this data to determine the appropriate level of corrosion protection.

9. REFERENCES

Trimble, D.E. and M.N. Machette, 1979, Geologic Maps of the Greater Denver Area, Front Range Urban Corridor, Colorado, U.S. Geological Survey.

GEOCAL Geotechnical Report Addendum Number 1, Letter Report, May 11, 2015.

Pavement Design Standards and Construction Specifications, Metropolitan Government Pavement Engineers Council, 2001 version with February 2002 updates.

10. LIMITATIONS

The recommendations in this report are based on our field observations, laboratory testing, and our present understanding of the proposed construction. It is possible that subsurface conditions can vary beyond the point explored. If the conditions found during construction differ from those described in this report, please notify us immediately so that we can review our report in light of those conditions and provide supplemental recommendations as necessary. We should also review this report if the scope of the proposed construction, including the proposed loads or structure locations, changes from that described in this report.

Yeh and Associates has prepared this report for the exclusive use of Tsiouvaras Simmons, Holderness, Inc. for proposed roadway construction in Denver, Colorado. This report was prepared in substantial accordance with the generally accepted standards of practice for geotechnical engineering as exist in the site area at the time of our investigation. No warranty is expressed or implied. The recommendations in this report are based on the assumption that an adequate program of construction testing and observation to evaluate compliance with our recommendations will be conducted.

Yeh and Associates appreciates being of service in the geotechnical phase of this project and would appreciate an opportunity to assist Tsiouvaras Simmons, Holderness, Inc. in future work at the site



Yeh and Associates, Inc.
Consulting Engineers & Scientists

NO.	SHEET REVISION	BY	DATE

REUSE OF DOCUMENT

This document is the property of Yeh & Associates, Inc. The ideas incorporated on this document are instruments of professional service and shall not be used for any other project without written authorization from Yeh & Associates, Inc.

DRAWN BY: MJW	DATE: 10/8/2015
CHECKED BY: SH	DATE: 10/8/2015
DESIGNED FOR: TSH, INC.	
PROJECT NUMBER: 215-094	
SCALE	
HORIZ: NTS	VERT:

PROJECT:

33RD ST AND FESTIVAL

BORING LOCATION PLAN

SHEET

OF

APPENDICES

APPENDIX A BORING LOGS
APPENDIX B LABORATORY TEST RESULTS
APPENDIX C PAVEMENT DESIGN
APPENDIX D GEOCAL REPORT

Appendix A

BORING LOGS

Yeh and Associates, Inc.
Consulting Engineers & Scientists

Project Name: Festival St. & 33rd St.

Project Number: 215-094 *Boring No.:* **YA-F-1**

Boring Began: 9/17/2015
Boring Completed: 9/17/2015
Drilling Method(s): Solid-Stem Auger
Driller: Old Dirt Drilling
Drill Rig: CME 45
Hammer Type: Cathead and rope

Total Depth: 11.0 ft
Ground Elevation:
Coordinates: N: E:
Location:
Logged By: M. Boyd
Final By: M. Boyd

Weather Notes: sunny
Inclination from Horiz.: Vertical
Night Work: ☐

Groundwater Levels: Not Observed

Symbol			
Depth	-	-	-
Date	-	-	-

Elevation (feet)	Depth (feet)	Sample Type/ Advancement Method	Soil Samples: Blows per 6 in	Soil Samples: Penetration Resistance	Lithology	Material Description	Moisture Content (%)	Dry Density (pcf)	Gravel Content (%)	Sand Content (%)	Fines Content (%)	Atterberg Limits: Liquid Limit	Atterberg Limits: Plasticity Index	AASHTO & USCS Classifications	Field Notes and Other Lab Tests
						0.0 - 0.4 ft. 4.5" ASPHALT.									
						0.4 - 4.0 ft. silty SAND FILL with gravel, dark brown, moist, brick chips.	*2.5*		*24*	*57*	*19*	NV	NP	*A-1-b (0) SM*	
			5-5	10			8.0	115.5	21	61	18	35	20	A-2-6 (0) SC	
	5					**4.0 - 8.0 ft. clayey SAND FILL** with gravel, light brown to dark brown, moist.									
			2-2	4			9.3	109.5	9	62	29	NV	NP	A-2-4 (0) SM	
						8.0 - 11.0 ft. CLAYSTONE, tan to gray.									
	10		21-29	50			18.8	111.1	0	5	95	55	35	A-7-6 (36) CH	S/C=3.8%

Bottom of Hole at 11.0 ft.

BORING LOG 2015 FESTIVAL GINT.GPJ 2015 YEH ASSOCIATES TEMPLATE.GDT 2015 LIBRARY.GLB 10/15/15

Yeh and Associates, Inc.
Consulting Engineers & Scientists

Project Name: Festival St. & 33rd St.

Project Number: 215-094 *Boring No.:* **YA-F-2**

Boring Began: 9/17/2015
Boring Completed: 9/17/2015
Drilling Method(s): Solid-Stem Auger
Driller: Old Dirt Drilling
Drill Rig: CME 45
Hammer Type: Cathead and rope

Total Depth: 11.0 ft
Ground Elevation:
Coordinates: N: E:
Location:
Logged By: M. Boyd
Final By: M. Boyd

Weather Notes: sunny
Inclination from Horiz.: Vertical
Night Work: ☐

Groundwater Levels: Not Observed

Symbol			
Depth	-	-	-
Date	-	-	-

Elevation (feet)	Depth (feet)	Sample Type/ Advancement Method	Soil Samples: Blows per 6 in	Soil Samples: Penetration Resistance	Lithology	Material Description	Moisture Content (%)	Dry Density (pcf)	Gravel Content (%)	Sand Content (%)	Fines Content (%)	Atterberg Limits: Liquid Limit	Atterberg Limits: Plasticity Index	AASHTO & USCS Classifi-cations	Field Notes and Other Lab Tests
						0.0 - 0.5 ft. sandy GRAVEL FILL.									
						0.5 - 1.5 ft. Concrete debris FILL.									
						1.5 - 7.5 ft. silty SAND FILL with gravel, dark brown to black, moist.	*2.3*		*13*	*64*	*23*	NV	NP	*A-1-b (0) SM*	
			6-5	11			12.4	101.9	14	68	18	NV	NP	A-1-b (0) SM	
	5		3-4	7			9.0	125.0	22	55	23	32	16	A-2-6 (0) SC	
						7.5 - 11.0 ft. sandy CLAY FILL, light brown to brown, moist, organic material (roots).									
	10		6-9	15			20.4	106.0	0	18	82	39	20	A-6 (16) CL	

Bottom of Hole at 11.0 ft.

BORING LOG 2015 FESTIVAL GINT.GPJ 2015 YEH ASSOCIATES TEMPLATE.GDT 2015 LIBRARY.GLB 10/15/15

Yeh and Associates, Inc.
Consulting Engineers & Scientists

Project Name: Festival St. & 33rd St.

Project Number: 215-094 *Boring No.:* **YA-F-3**

Boring Began: 9/17/2015
Boring Completed: 9/17/2015
Drilling Method(s): Solid-Stem Auger
Driller: Old Dirt Drilling
Drill Rig: CME 45
Hammer Type: Cathead and rope

Total Depth: 11.0 ft
Ground Elevation:
Coordinates: N: E:
Location:
Logged By: M. Boyd
Final By: M. Boyd

Weather Notes: sunny
Inclination from Horiz.: Vertical
Night Work: ☐

Groundwater Levels: Not Observed

Symbol			
Depth	-	-	-
Date	-	-	-

Elevation (feet)	Depth (feet)	Sample Type/ Advancement Method	Soil Samples: Blows per 6 in	Soil Samples: Penetration Resistance	Lithology	Material Description	Moisture Content (%)	Dry Density (pcf)	Gravel Content (%)	Sand Content (%)	Fines Content (%)	Atterberg Limits: Liquid Limit	Atterberg Limits: Plasticity Index	AASHTO & USCS Classifications	Field Notes and Other Lab Tests
						0.0 - 0.5 ft. sandy GRAVEL FILL.									
						0.5 - 11.0 ft. Variable soil and debris FILL, silt, sand, gravel, claystone, bricks, plastic, slag, asphalt, and organic material (roots).	*5.1*		*12*	*60*	*28*	*35*	*23*	*A-2-6 (1) SC*	pH=9 S=0.021% Chl=0.0021% R-Value=34 Re=1548ohm·cm
			5-5	10			11.5	106.6	12	47	41	48	22	A-7-6 (5) SC	
	5		9-10	19			6.1	106.6	14	60	26	NV	NP	A-2-4 (0) SM	
	10		3-3	6			11.7		21	66	13	NV	NP	A-1-b (0) SM	

Bottom of Hole at 11.0 ft.

BORING LOG 2015 FESTIVAL GINT.GPJ 2015 YEH ASSOCIATES TEMPLATE.GDT 2015 LIBRARY.GLB 10/15/15

Appendix B

LABORTARY TEST RESULTS

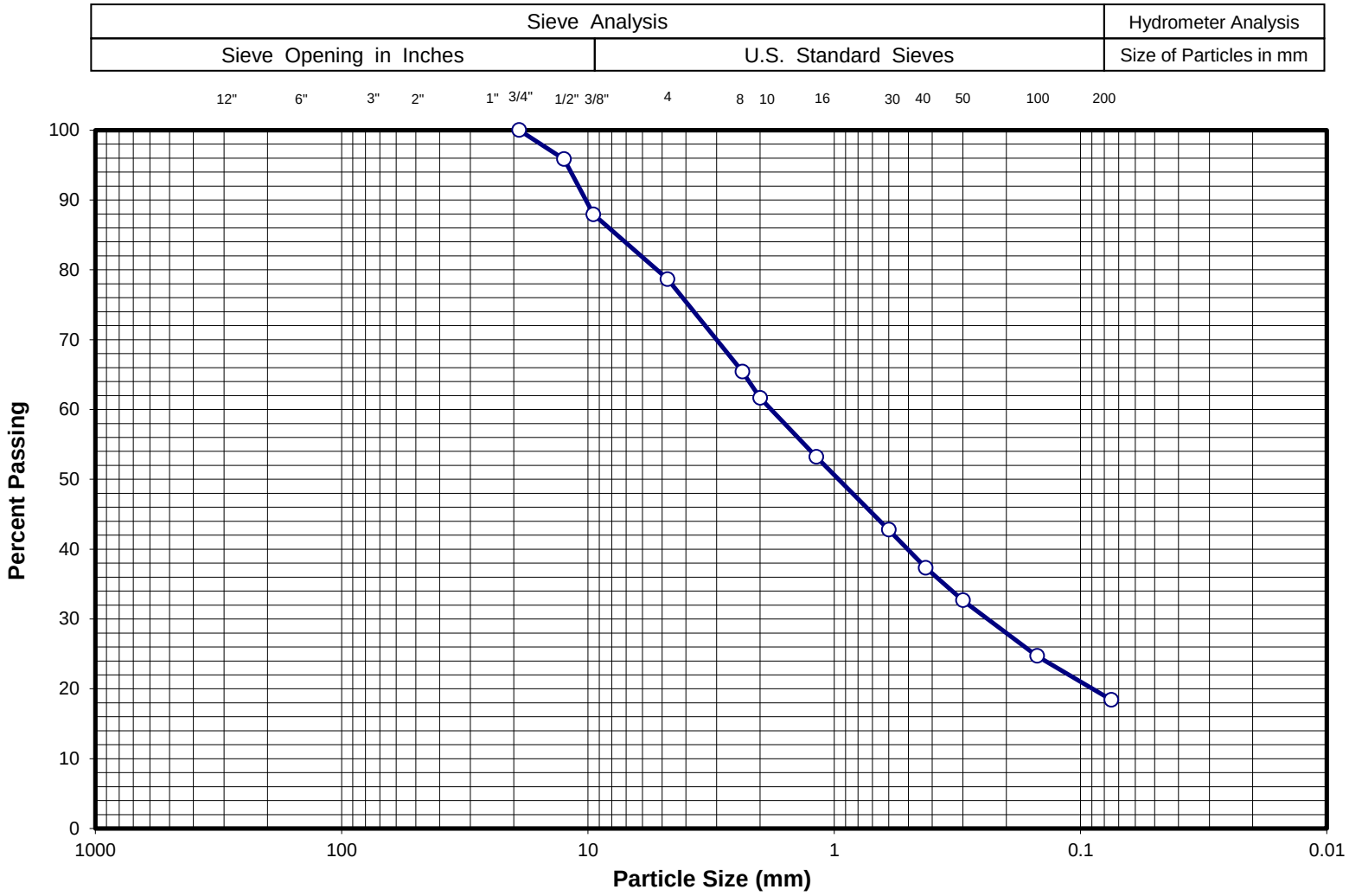

Sieve Size	% Passing
3"	-
2 ½"	-
2"	-
1 ½"	-
1"	-
¾ "	100
½"	96
⅜"	88
#4	79
#10	62
#40	37
#200	18

Gravel (%)	21	LL	NV	Project Name:	33rd and Festival Pavement Design
Sand (%)	61	PL	NP	Sample ID:	F-1
Fines (%)	18	PI	NP	Sample Depth (ft.):	2-3
Sample Description:					

Yeh & Associates, Inc.
Geotechnical Engineering Consultants

SIEVE ANALYSIS

Drawn By:	MA	Project No.:	215-094
Checked By:	I-Ping		
Date:	09/29/15	Figure No.:	-

Revised 04/27/2004

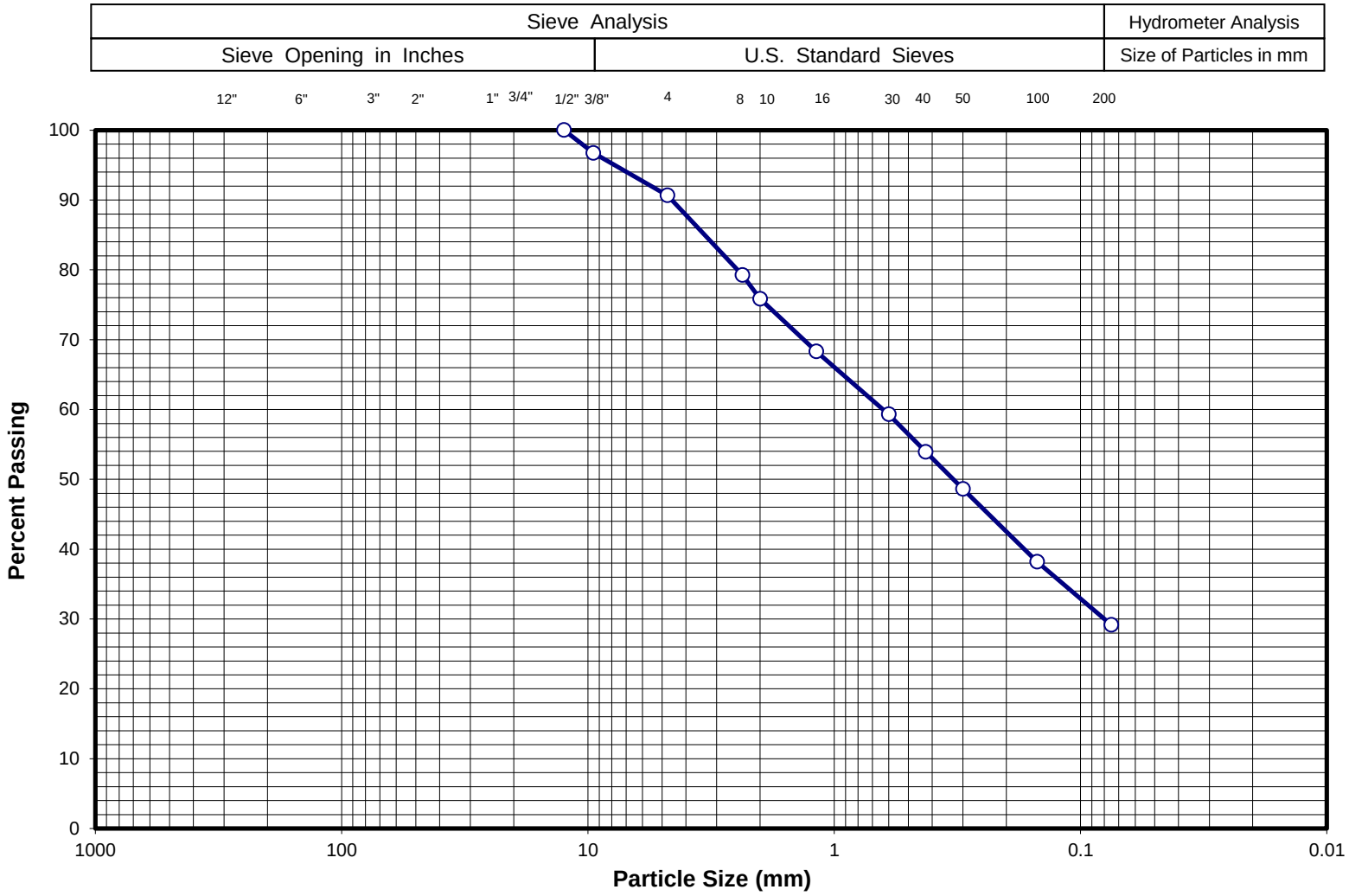

Sieve Size	% Passing
3"	-
2 ½"	-
2"	-
1 ½"	-
1"	-
¾ "	-
½"	100
⅜"	97
#4	91
#10	76
#40	54
#200	29

Gravel (%)	9	LL	NV	Project Name:	33rd and Festival Pavement Design
Sand (%)	62	PL	NP	Sample ID:	F-1
Fines (%)	29	PI	NP	Sample Depth (ft.):	5-6 (second)
Sample Description:	**A-2-4 (0) / SM**				

Yeh & Associates, Inc.
Geotechnical Engineering Consultants

SIEVE ANALYSIS

Drawn By:	MA	Project No.:	215-094
Checked By:	M.G		
Date:	09/29/15	Figure No.:	-

Revised 04/27/2004

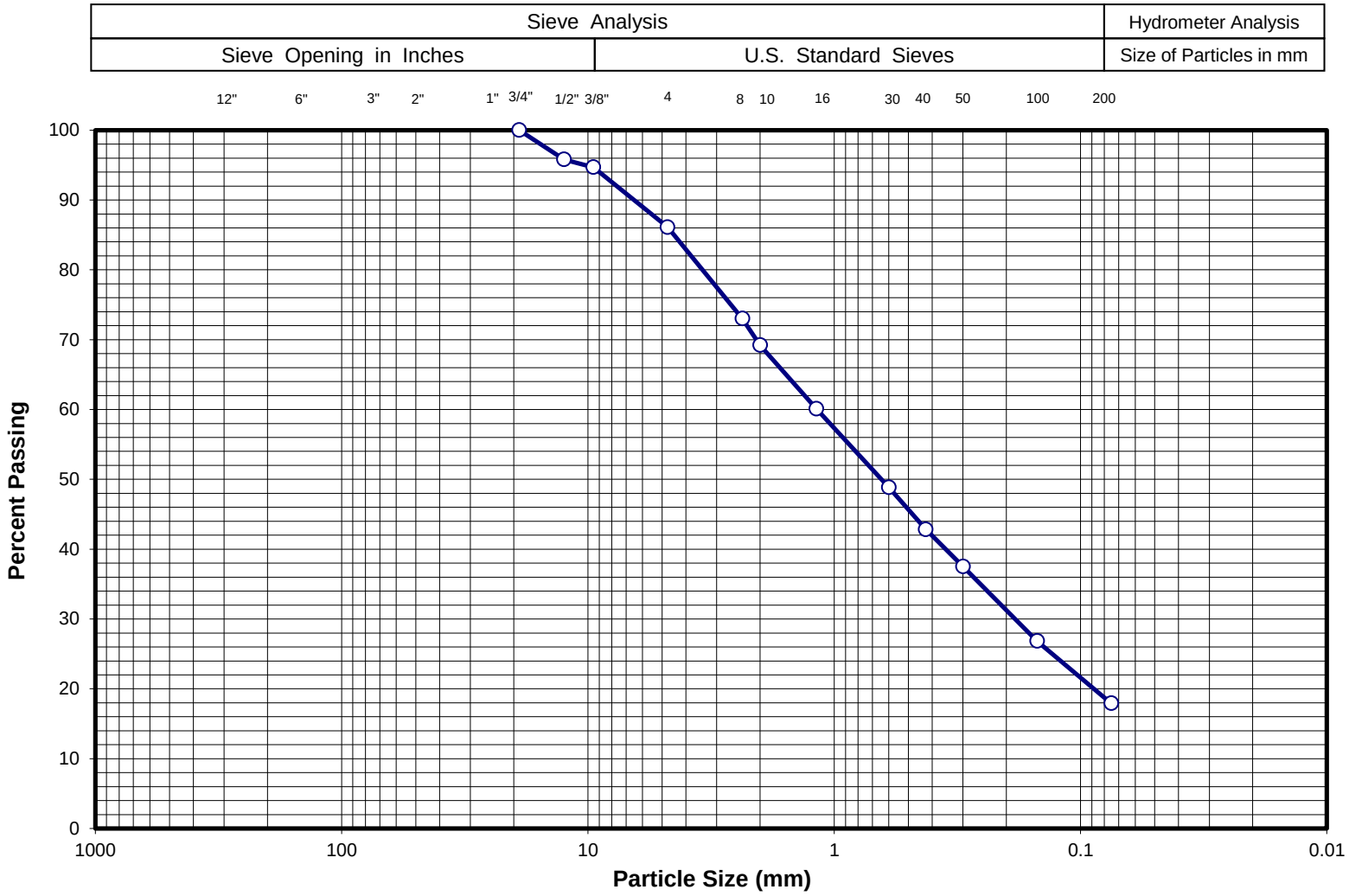

Sieve Size	% Passing
3"	-
2 ½"	-
2"	-
1 ½"	-
1"	-
¾ "	100
½"	96
⅜"	95
#4	86
#10	69
#40	43
#200	18

Gravel (%)	14	LL	NV	Project Name:	33rd and Festival Pavement Design
Sand (%)	68	PL	NP	Sample ID:	F-2
Fines (%)	18	PI	NP	Sample Depth (ft.):	2-3
Sample Description:	**A-1-b (0) / SM**				

Yeh & Associates, Inc.
Geotechnical Engineering Consultants

SIEVE ANALYSIS

Drawn By:	MA	Project No.:	215-094
Checked By:	M.G		
Date:	09/29/15	Figure No.:	-

Revised 04/27/2004

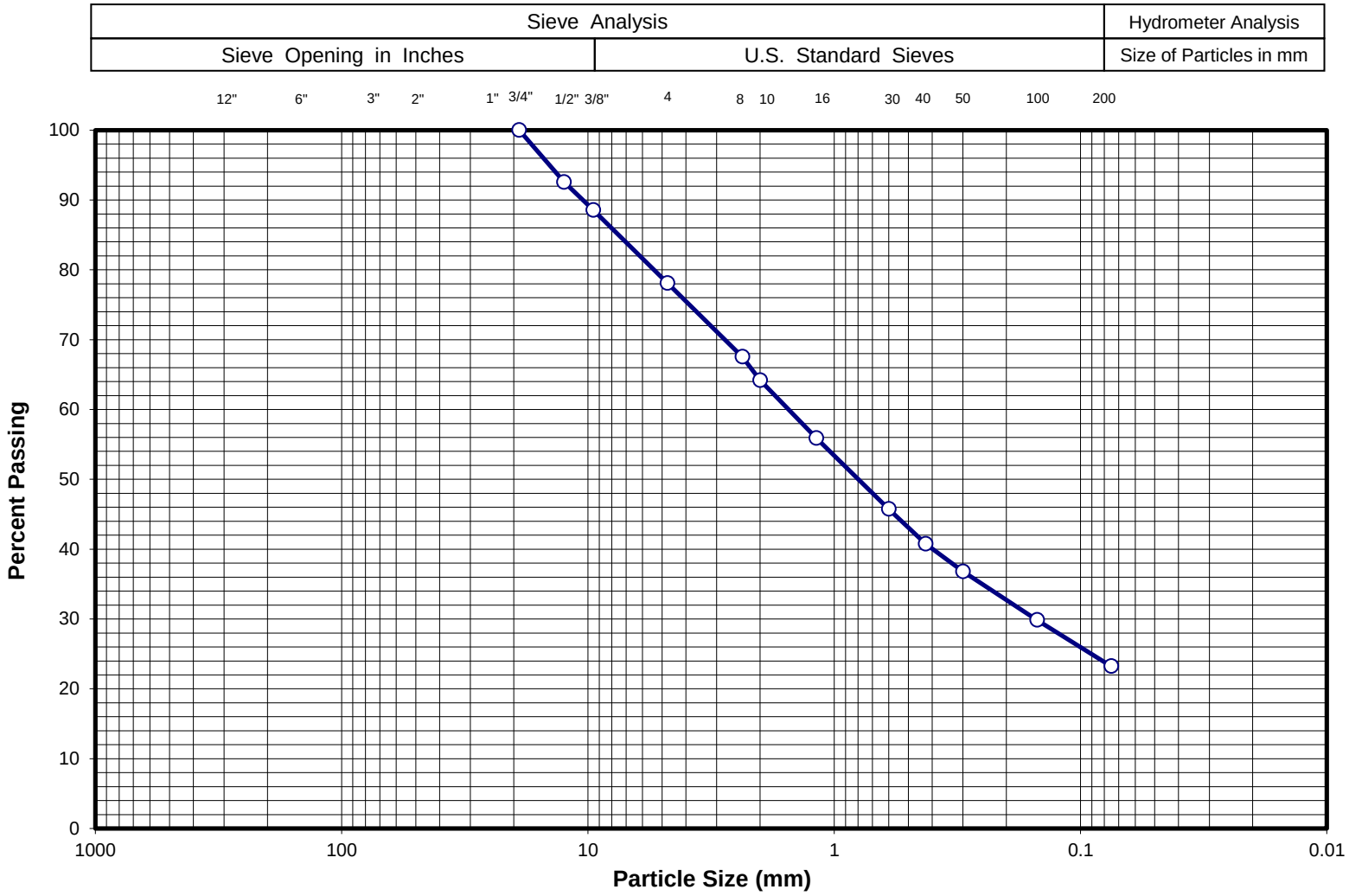

Sieve Size	% Passing
3"	-
2 ½"	-
2"	-
1 ½"	-
1"	-
¾ "	100
½"	93
⅜"	89
#4	78
#10	64
#40	41
#200	23

Gravel (%)	22	LL	32	Project Name:	33rd and Festival Pavement Design
Sand (%)	55	PL	16	Sample ID:	F-2
Fines (%)	23	PI	16	Sample Depth (ft.):	5-6
Sample Description:	**A-2-6 (0) / SC**				

Yeh & Associates, Inc.
Geotechnical Engineering Consultants

SIEVE ANALYSIS

Drawn By:	MA	Project No.:	215-094
Checked By:	M.G		
Date:	09/29/15	Figure No.:	-

Revised 04/27/2004

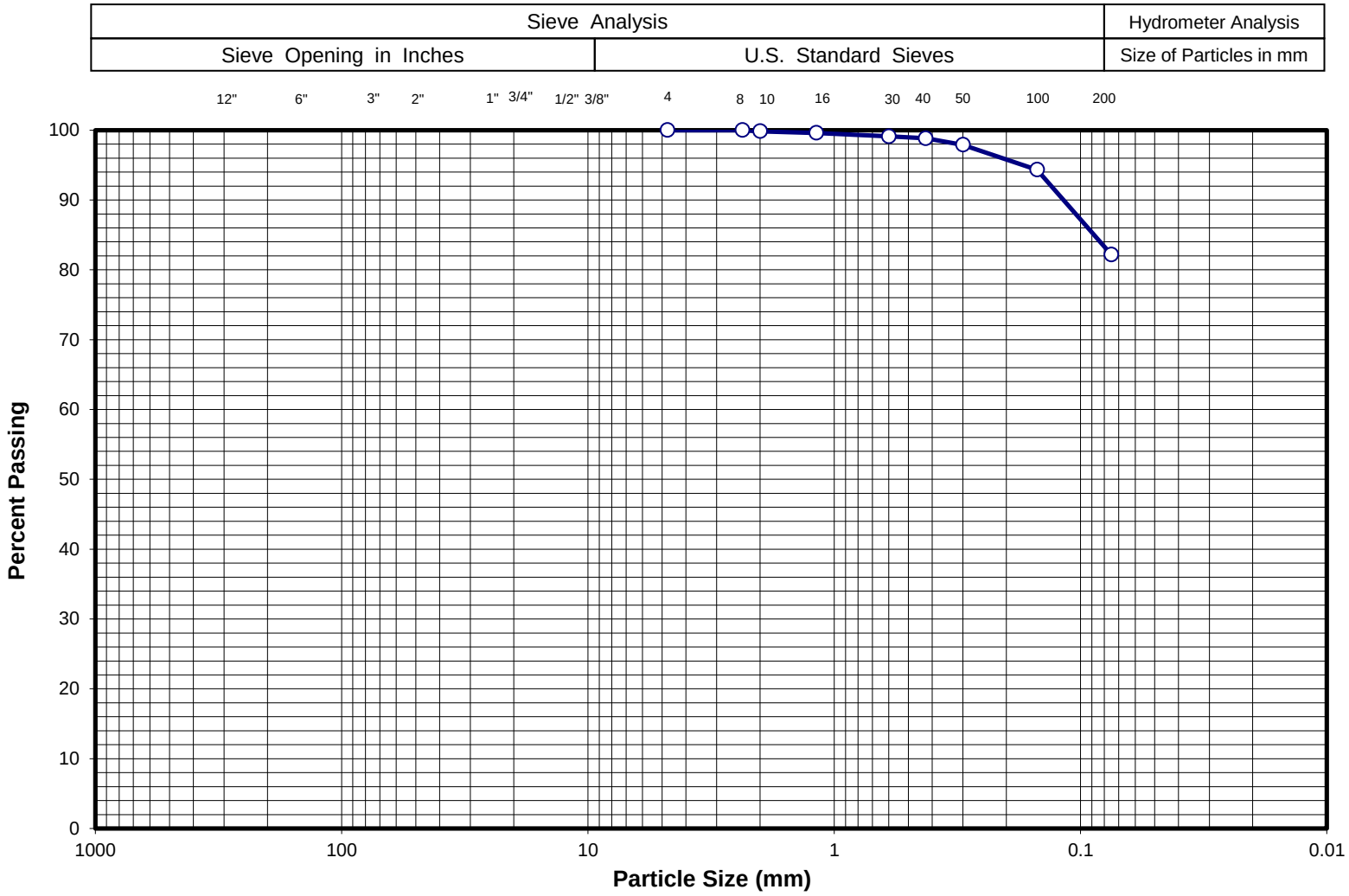

Sieve Size	% Passing
3"	-
2 ½"	-
2"	-
1 ½"	-
1"	-
¾ "	-
½"	-
⅜"	-
#4	100
#10	100
#40	99
#200	82

Gravel (%)	0	LL	39	Project Name:	33rd and Festival Pavement Design
Sand (%)	18	PL	19	Sample ID:	F-2
Fines (%)	82	PI	20	Sample Depth (ft.):	10-11
Sample Description:	**A-6 (16) / CL**				

Yeh & Associates, Inc.
Geotechnical Engineering Consultants

SIEVE ANALYSIS

Drawn By:	MA	Project No.:	215-094
Checked By:	M.G		
Date:	09/29/15	Figure No.:	-

Revised 04/27/2004

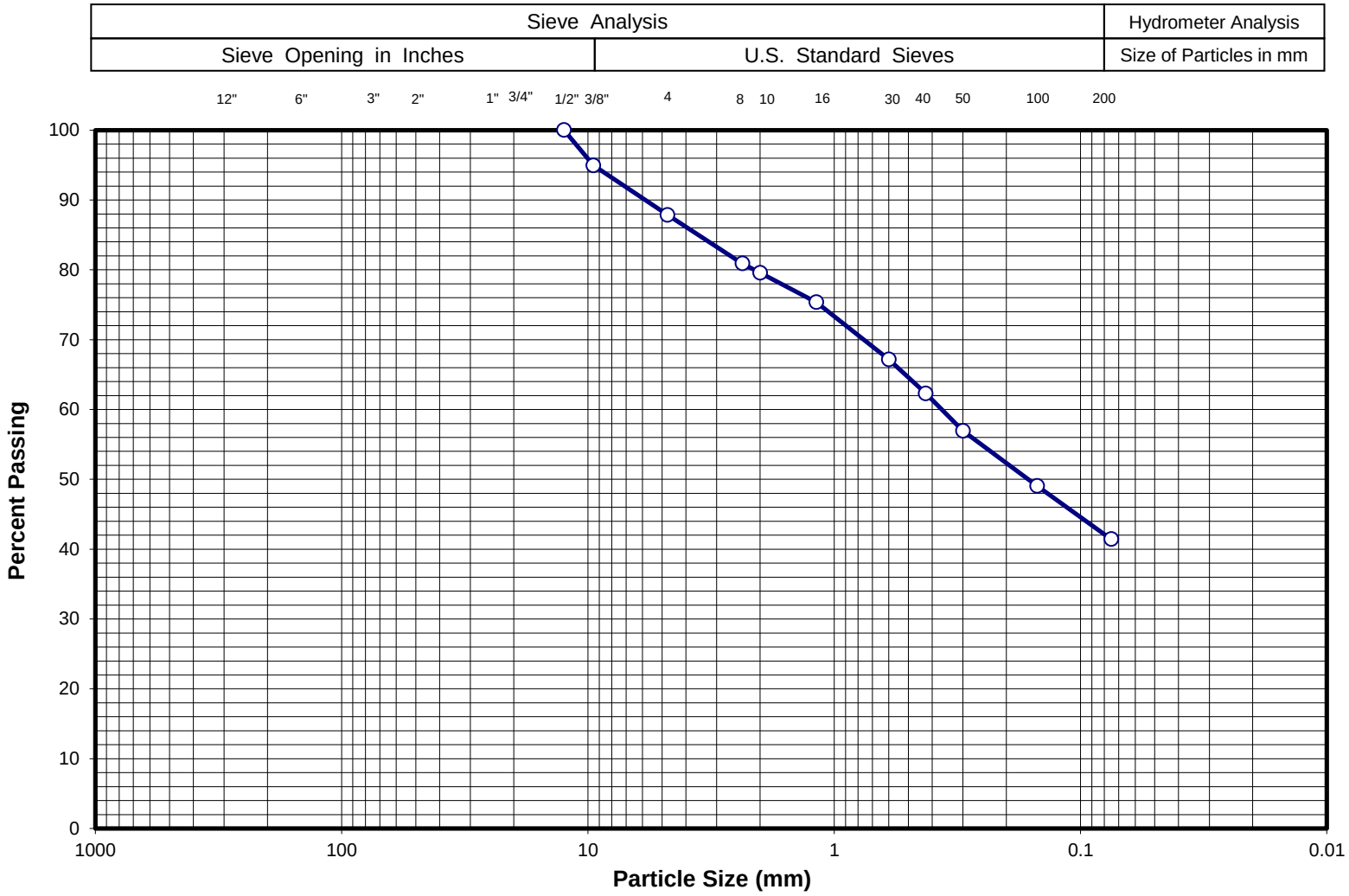

Sieve Size	% Passing
3"	-
2 ½"	-
2"	-
1 ½"	-
1"	-
¾ "	-
½"	100
⅜"	95
#4	88
#10	80
#40	62
#200	41

Gravel (%)	12	LL	48	Project Name:	33rd and Festival Pavement Design
Sand (%)	47	PL	26	Sample ID:	F-3
Fines (%)	41	PI	22	Sample Depth (ft.):	2-3
Sample Description:	**A-7-6 (5) / SC**				

Yeh & Associates, Inc.
Geotechnical Engineering Consultants

SIEVE ANALYSIS

Drawn By:	MA	Project No.:	215-094
Checked By:	M.G		
Date:	09/29/15	Figure No.:	-

Revised 04/27/2004

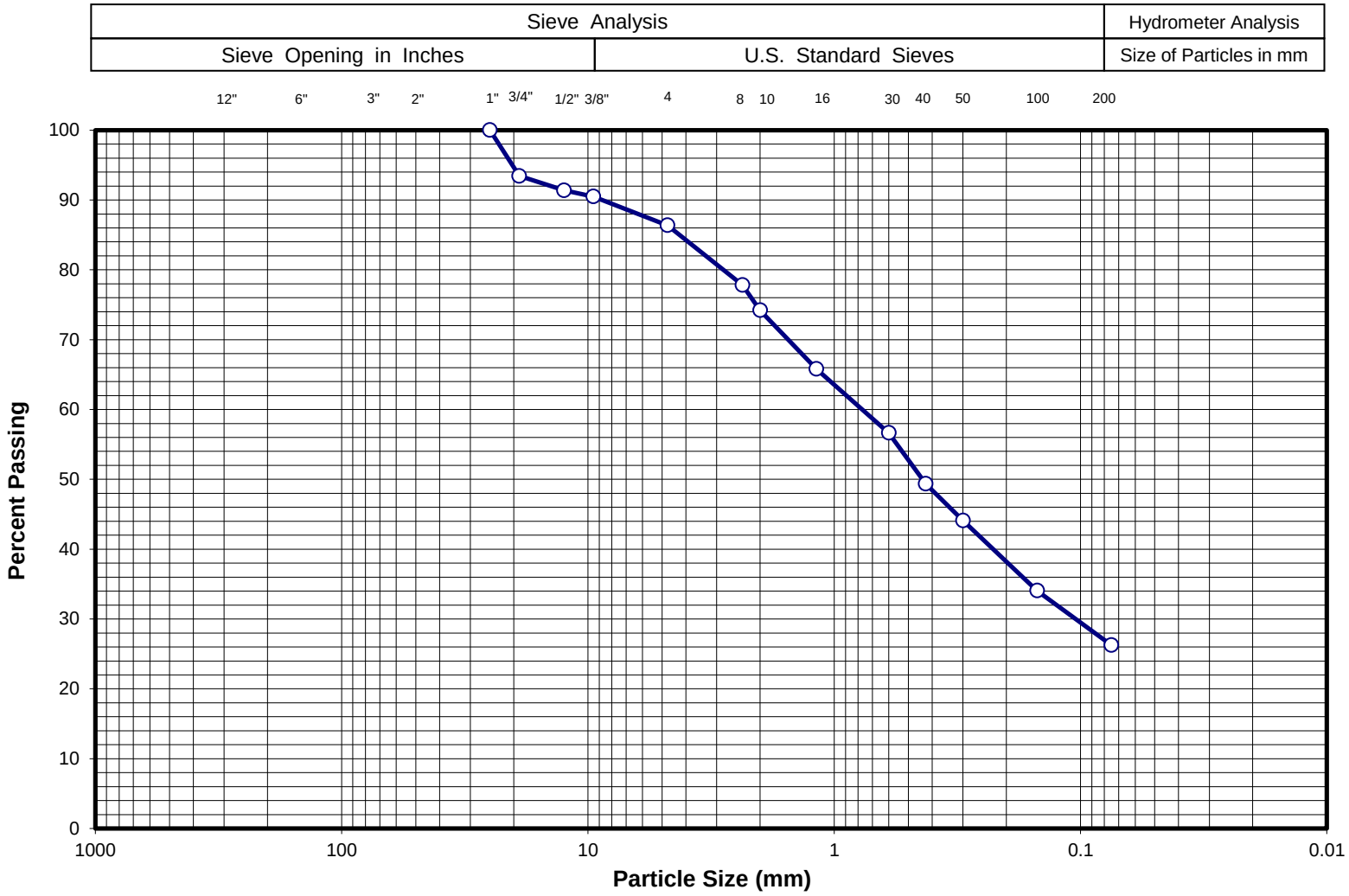

Sieve Size	% Passing
3"	-
2 ½"	-
2"	-
1 ½"	-
1"	100
¾ "	93
½"	91
⅜"	90
#4	86
#10	74
#40	49
#200	26

Gravel (%)	14	LL	NV	Project Name:	33rd and Festival Pavement Design
Sand (%)	60	PL	NP	Sample ID:	F-3
Fines (%)	26	PI	NP	Sample Depth (ft.):	5-6
Sample Description:	**A-2-4 (0) / SM**				

Yeh & Associates, Inc.
Geotechnical Engineering Consultants

SIEVE ANALYSIS

Drawn By:	MA	Project No.:	215-094
Checked By:	M.G		
Date:	09/29/15	Figure No.:	-

Revised 04/27/2004

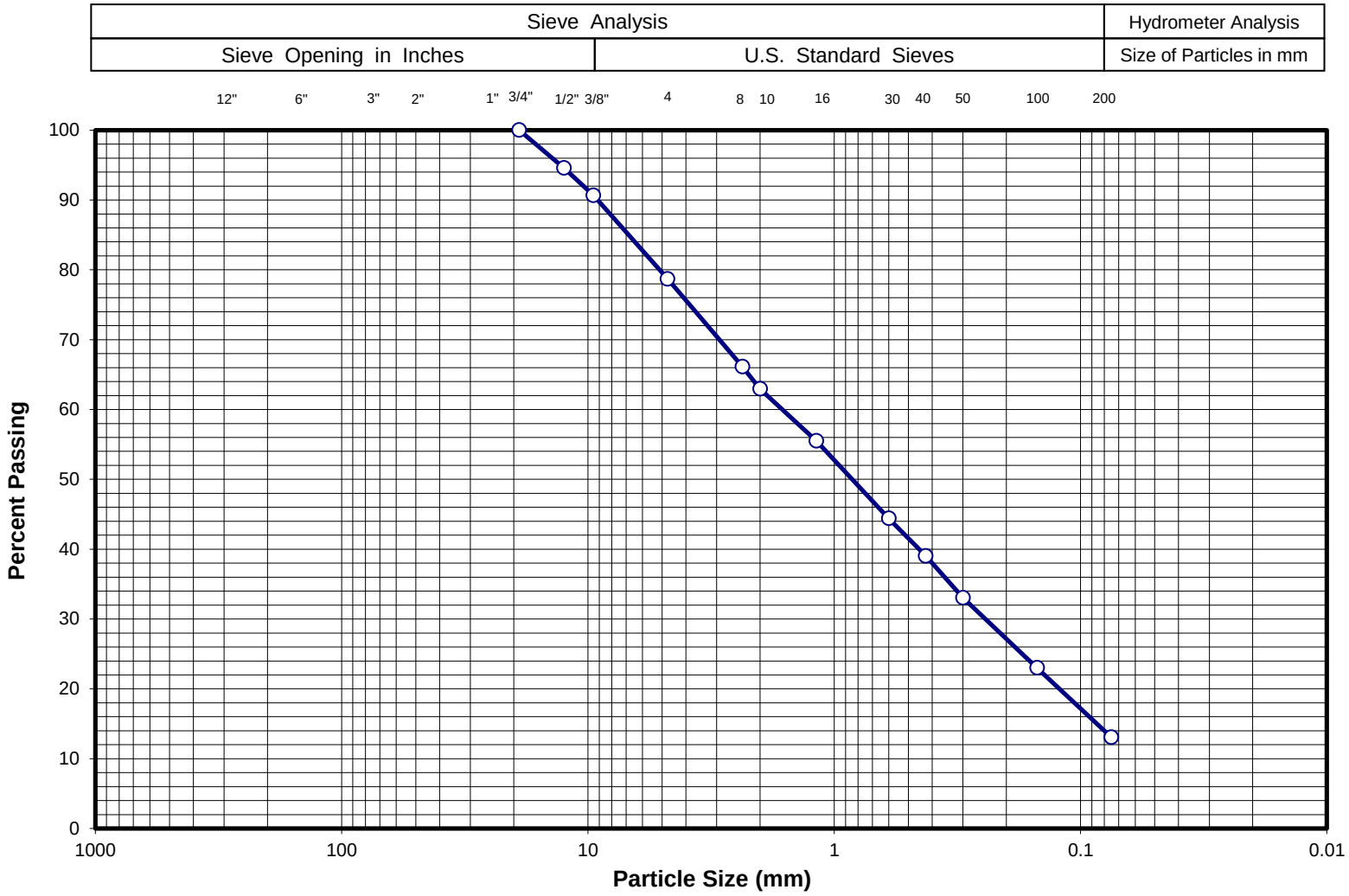

Sieve Size	% Passing
3"	-
2 ½"	-
2"	-
1 ½"	-
1"	-
¾ "	100
½"	95
⅜"	91
#4	79
#10	63
#40	39
#200	13

Gravel (%)	21	LL	NV	Project Name:	33rd and Festival Pavement Design
Sand (%)	66	PL	NP	Sample ID:	F-3
Fines (%)	13	PI	NP	Sample Depth (ft.):	10-11
Sample Description:	**A-1-b (0) / SM**				

Yeh & Associates, Inc.
Geotechnical Engineering Consultants

SIEVE ANALYSIS

Drawn By:	MA	Project No.:	215-094
Checked By:	M.G		
Date:	09/29/15	Figure No.:	-

Revised 04/27/2004

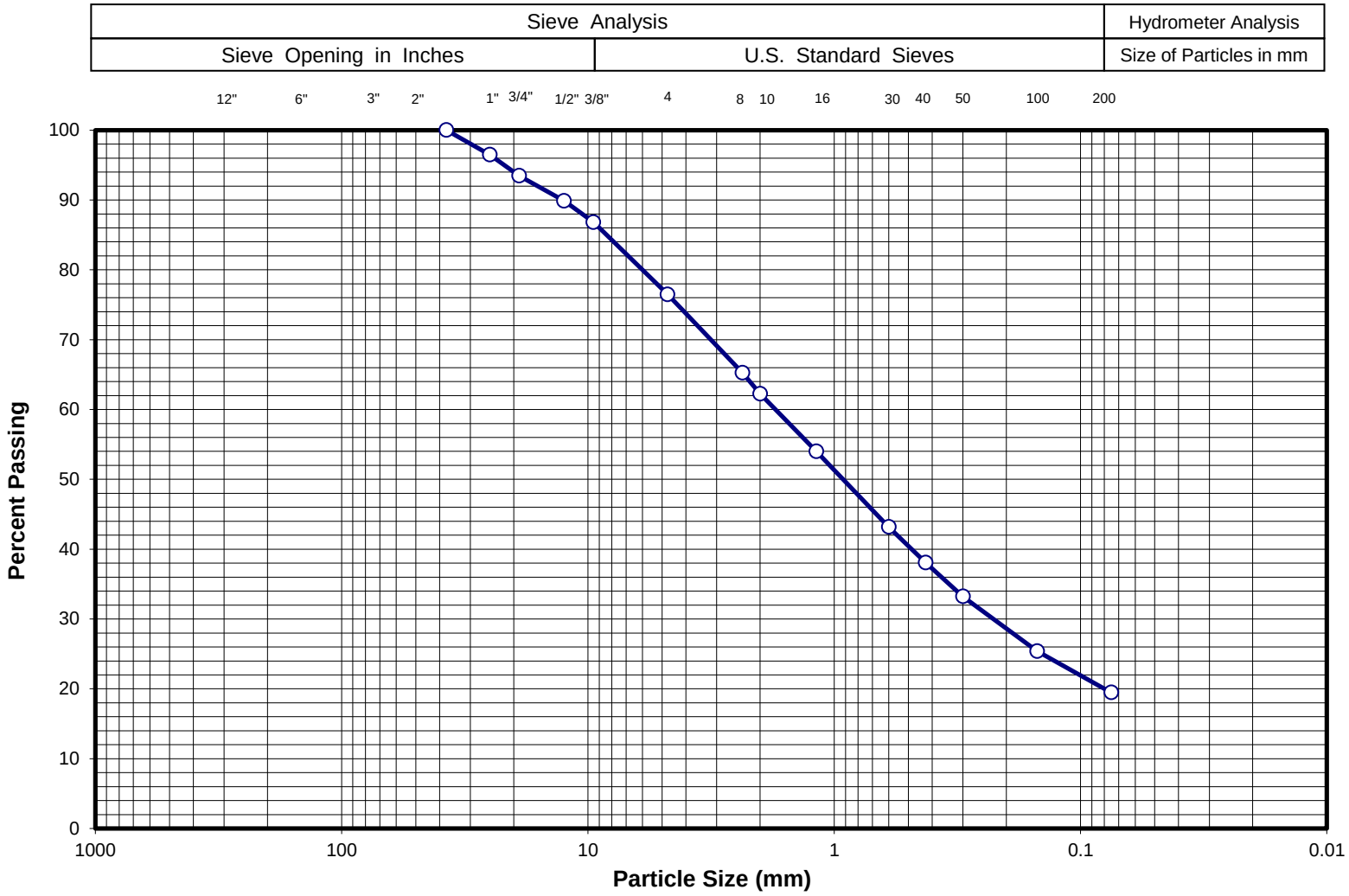

Sieve Size	% Passing
3"	-
2 ½"	-
2"	-
1 ½"	100
1"	96
¾ "	93
½"	90
⅜"	87
#4	76
#10	62
#40	38
#200	19

Gravel (%)	24	LL	NV	Project Name:	33rd and Festival Pavement Design
Sand (%)	57	PL	NP	Sample ID:	F-1
Fines (%)	19	PI	NP	Sample Depth (ft.):	1-5
Sample Description:	A-1-b (0) / SM				

Yeh & Associates, Inc.
Geotechnical Engineering Consultants

SIEVE ANALYSIS

Drawn By:	M.A	Project No.:	215-094
Checked By:	M.G		
Date:	09/29/15	Figure No.:	-

Revised 04/27/2004

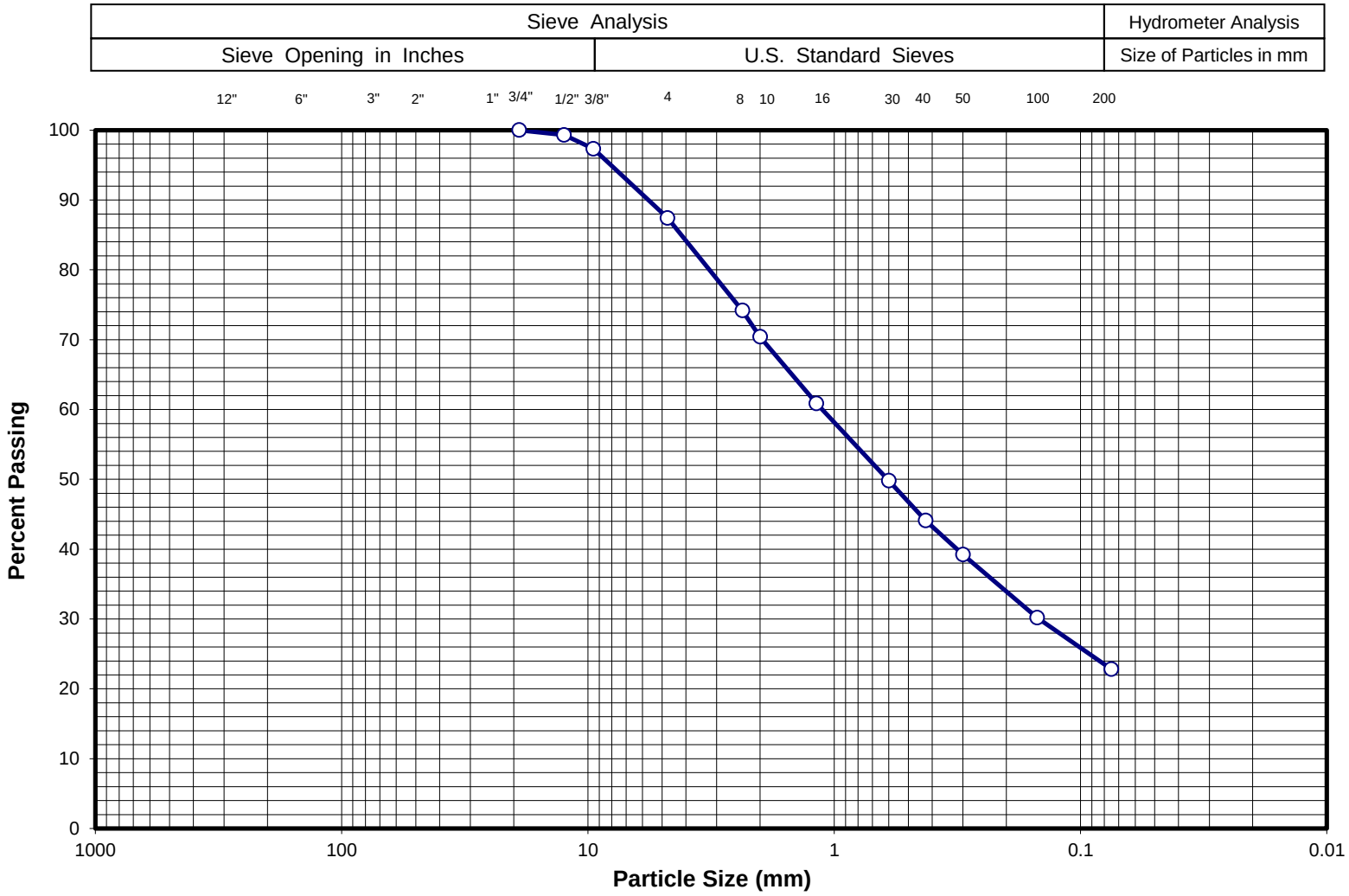

Sieve Size	% Passing
3"	-
2 ½"	-
2"	-
1 ½"	-
1"	-
¾ "	100
½"	99
⅜"	97
#4	87
#10	70
#40	44
#200	23

Gravel (%)	13	LL	NV	Project Name:	33rd and Festival Pavement Design
Sand (%)	64	PL	NP	Sample ID:	F-2
Fines (%)	23	PI	NP	Sample Depth (ft.):	1.5-5
Sample Description:	A-1-b (0) / SM				

Yeh & Associates, Inc.
Geotechnical Engineering Consultants

SIEVE ANALYSIS

Drawn By:	M.A	Project No.:	215-094
Checked By:	M.G		
Date:	09/29/15	Figure No.:	-

Revised 04/27/2004

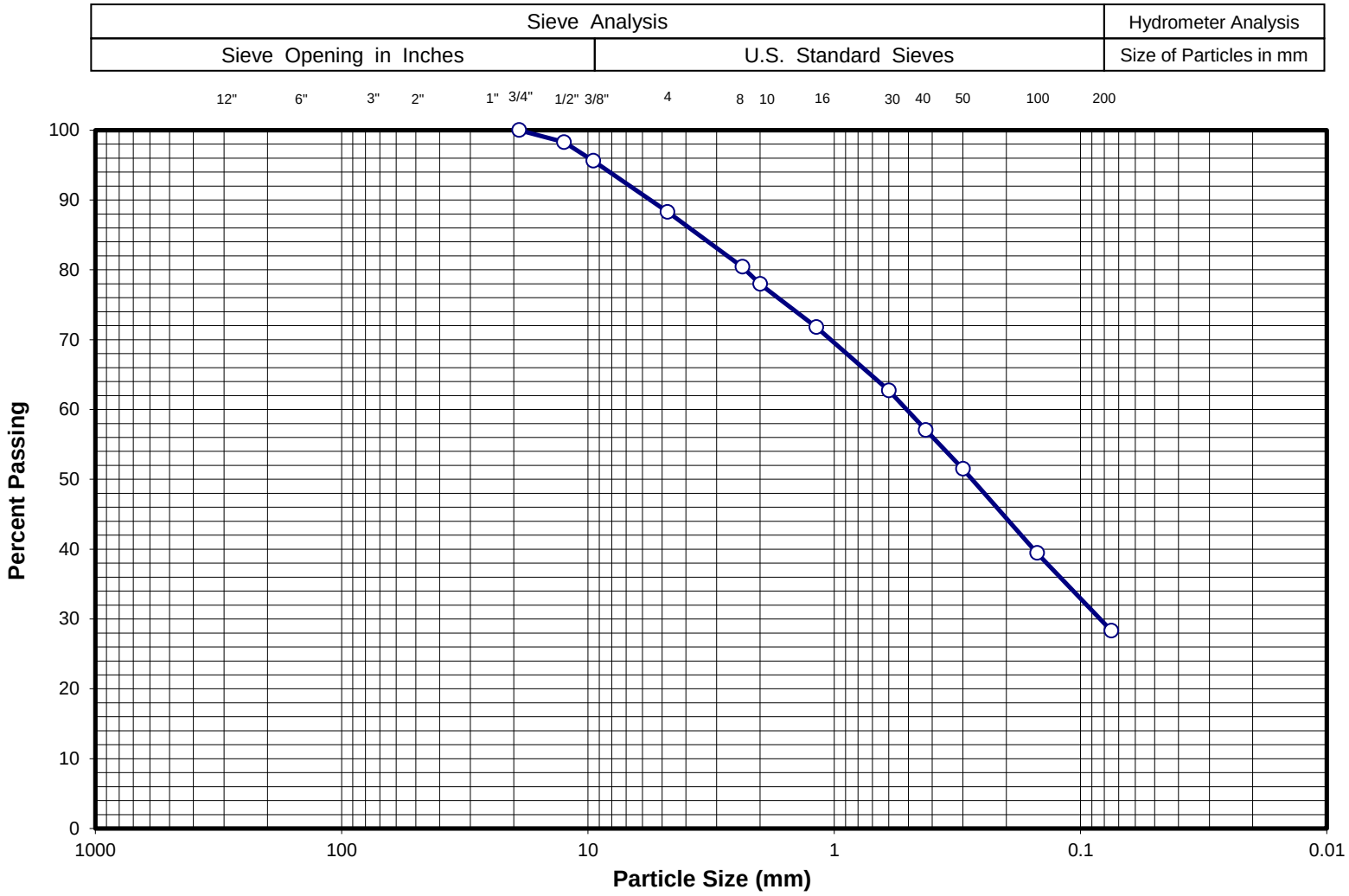

Sieve Size	% Passing
3"	-
2 ½"	-
2"	-
1 ½"	-
1"	-
¾ "	100
½"	98
⅜"	96
#4	88
#10	78
#40	57
#200	28

Gravel (%)	12	LL	35	Project Name:	33rd and Festival Pavement Design
Sand (%)	60	PL	12	Sample ID:	F-3
Fines (%)	28	PI	23	Sample Depth (ft.):	1-5
Sample Description:	A-2-6 (1) / SC				

Yeh & Associates, Inc.
Geotechnical Engineering Consultants

SIEVE ANALYSIS

Drawn By:	M.A	Project No.:	215-094
Checked By:	M.G		
Date:	09/29/15	Figure No.:	-

Revised 04/27/2004

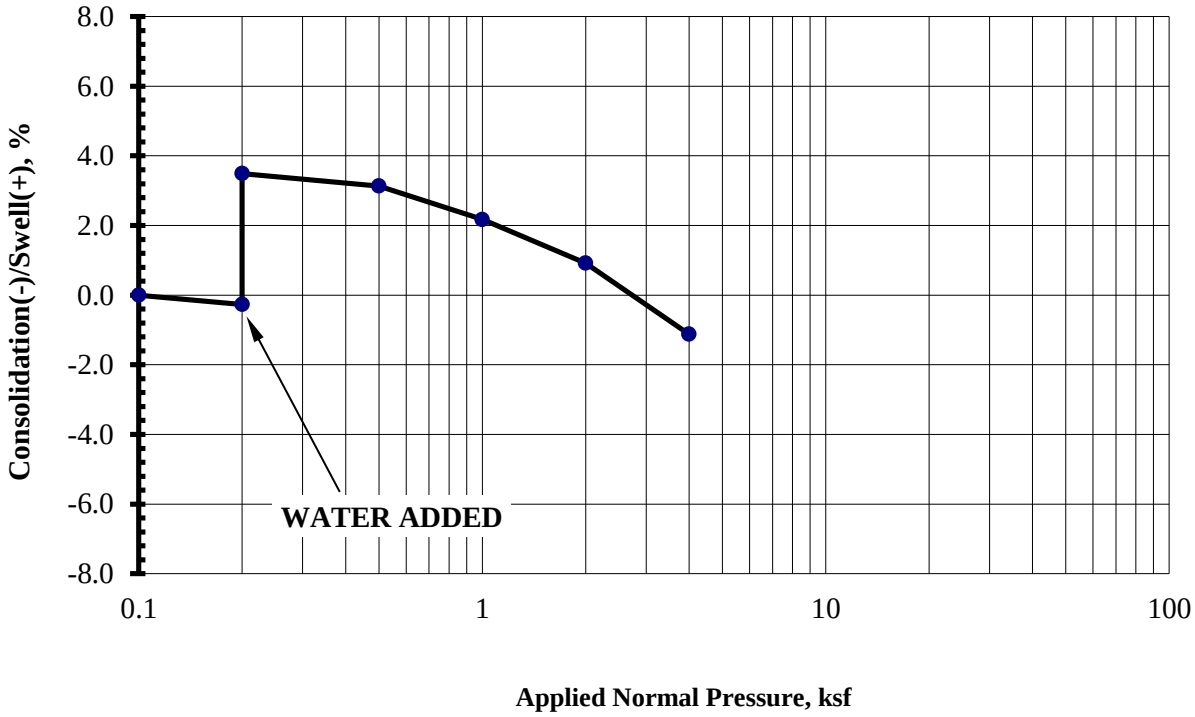

Boring Number		Depth, ft	Natural Dry Density, pcf	Moisture Content, %	Consolidation(-) /Swell(+), %	Soil Description	SWELL / CONSOLIDATION GRAPH
F-1		10-11	111.1	18.8%	3.8		Drawn By: M.A
Job No:	215-094	Project Name:		33rd and Festival Pavement Design			Checked By: RFL

YEH & ASSOCIATES, INC

YEH & ASSOCIATES, INC

Summary of Laboratory Test Results

Project No: 215-094 Project Name: 33rd and Festival Pavement Design Date: 9/29/2015

Sample Location			Natural Moisture Content (%)	Natural Dry Density (pcf)	Gradation			Atterberg			pH	Water Soluble Sulfate %	Resistivity ohm.cm	Chloride %	% Swell (+) / Consoli-dation (-)	R-Value	CLASSIFICATION	
Boring No.	Depth (ft)	Sample Type			Gravel > #4 (%)	Sand (%)	Fines < #200 (%)	LL	PL	PI							AASHTO	USCS
F-1	1-5	Bulk	2.5	–	24	57	19	NV	NP	NP	–	–	–	–	–	–	A-1-b (0)	SM
F-1	2-3	CA	8.0	115.5	21	61	18	35	15	20	–	–	–	–	–	–	A-2-6 (0)	SC
F-1(1)	5-6	CA	9.6	125.1	–	–	–	–	–	–	–	–	–	–	–	–	–	–
F-1(2)	5-6	CA	9.3	109.5	9	62	29	NV	NP	NP	–	–	–	–	–	–	A-2-4 (0)	SM
F-1	10-11	CA	18.8	111.1	0	5	95	55	20	35	–	–	–	–	3.8	–	A-7-6 (36)	CH
F-2	1.5-5	Bulk	2.3	–	13	64	23	NV	NP	NP	–	–	–	–	–	–	A-1-b (0)	SM
F-2	2-3	CA	12.4	101.9	14	68	18	NV	NP	NP	–	–	–	–	–	–	A-1-b (0)	SM
F-2	5-6	CA	9.0	125.0	22	55	23	32	16	16	–	–	–	–	–	–	A-2-6 (0)	SC
F-2	10-11	CA	20.4	106.0	0	18	82	39	19	20	–	–	–	–	–	–	A-6 (16)	CL
F-3	1-5	Bulk	5.1	–	12	60	28	35	12	23	9	0.021	1548	0.0021	–	34	A-2-6 (1)	SC
F-3	2-3	CA	11.5	106.6	12	47	41	48	26	22	–	–	–	–	–	–	A-7-6 (5)	SC
F-3	5-6	CA	6.1	106.6	14	60	26	NV	NP	NP	–	–	–	–	–	–	A-2-4 (0)	SM
F-3	10-11	CA	11.7	–	21	66	13	NV	NP	NP	–	–	–	–	–	–	A-1-b (0)	SM

Appendix C

PAVEMENT DESIGN

PAVEMENT DESIGN TO MGPEC STANDARDS 33RD STREET

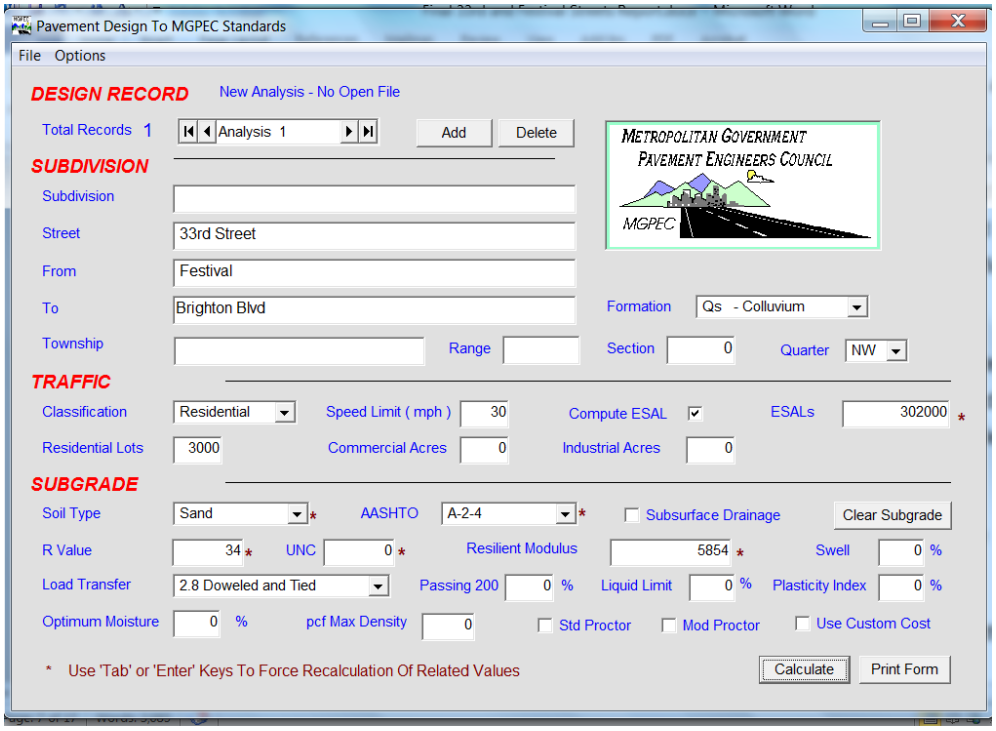

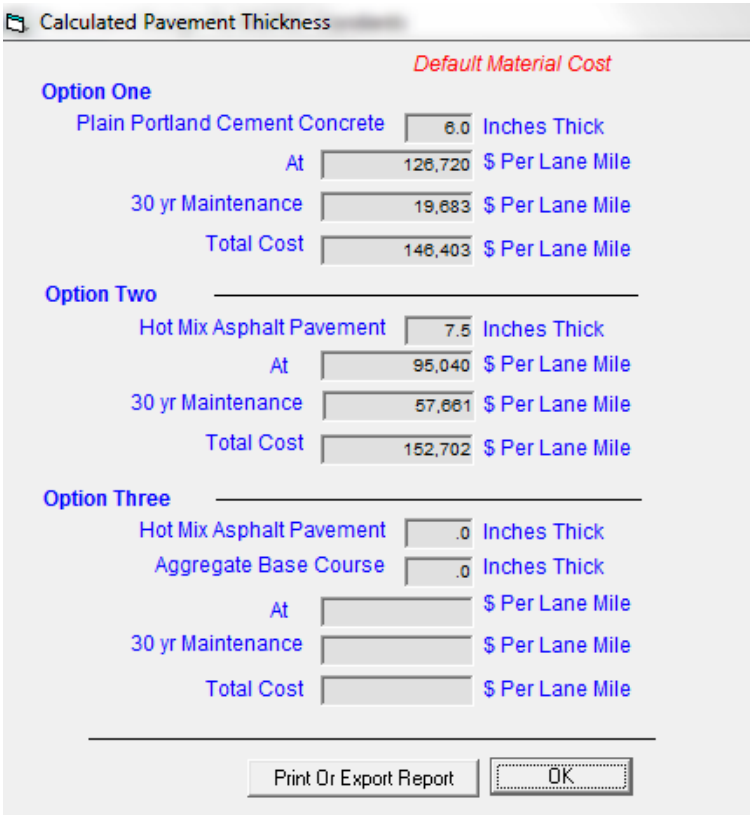

PAVEMENT DESIGN TO MGPEC STANDARDS FESTIVAL STREET

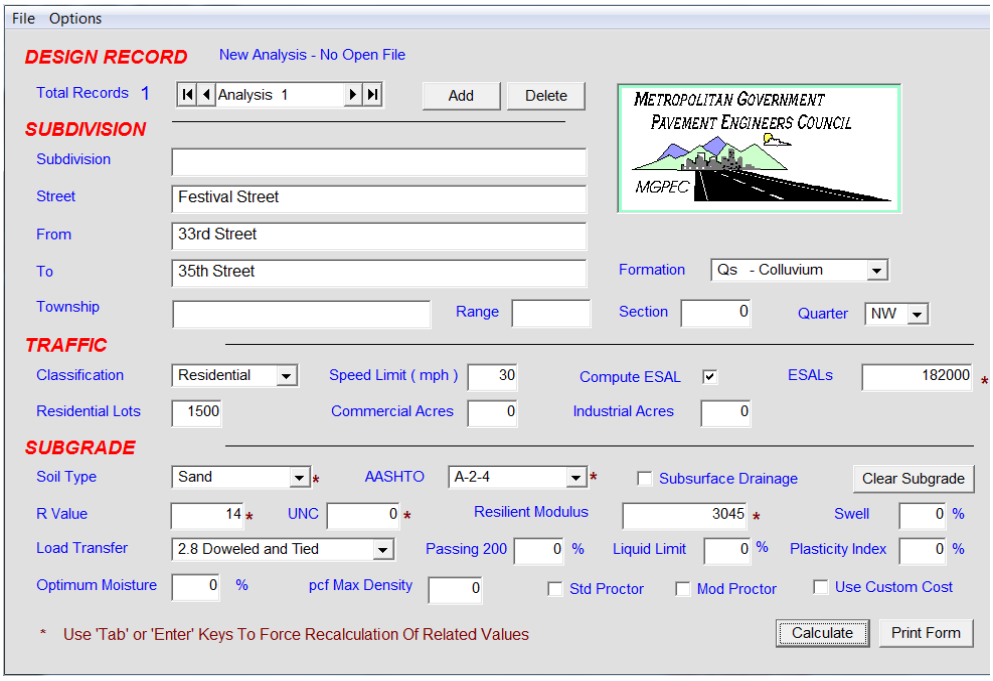

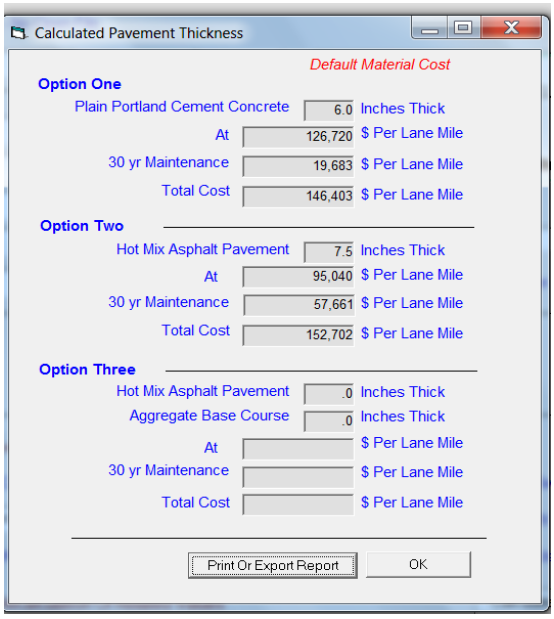

Appendix D

GEOCAL REPORT

GEOCAL
GEOSCIENCES & ENGINEERING

May 11, 2015

Mr. Jeffrey Holste, P.E.
Wilson & Company, Inc.
5755 Mark Dabling Boulevard
Suite 220
Colorado Springs, Colorado 80919

Re: Addendum No. 1 – Geotechnical Design Report
Arkins Ct. to Brighton Blvd.
Proposed 33rd Street Outfall
City and County of Denver, Colorado

Dear Jeff:

Geocal, Inc. has completed a subsurface exploration for the proposed 33rd Street Outfall project, the results of which have been submitted in a report titled *Revised Geotechnical Design Report – Proposed 33rd Street Outfall, City and County of Denver, Colorado*, dated October 21, 2014 and revised on March 25, 2015. A Geotechnical Baseline Report (GBR) and a Geotechnical Data Report (GDR) were also prepared for the above referenced project under separate titles. The recommendations presented in the above mentioned reports remain valid except as modified herein. This addendum should be used in conjunction with our Revised Geotechnical Design Report.

Since submittal of our Revised Geotechnical Design Report, we understand that the City and County of Denver (CCD) plans to develop the existing Gordons property between Arkins Court and Brighton Boulevard along the proposed 33rd Street Outfall alignment. The proposed improvements are expected to include the addition of a new road (Festival Street) from 33rd Street north to 35th Street.

This addendum presents the results of additional subsurface exploration conducted for the 33rd Street Outfall between Arkins Ct. Brighton Blvd. and for the 33rd Street/Festival Street improvements.

SUBSURFACE EXPLORATION

The subsurface exploration was conducted on April 28, 2015 and included drilling four exploratory borings at the approximate locations shown on Figure 1, Locations of Exploratory Borings. Three of the boring were drilled to depths ranging from approximately 5 feet to 10 feet for pavement design purposes, and the remaining boring (Boring 3-PSB) was drilled to a depth of approximately 25 feet to obtain information for traffic signal pole foundations and the 33rd Street outfall structure. The borings were drilled with a truck-mounted Central Mine Equipment (CME) 55 truck mounted drill rig equipped with 3¼ inch inside diameter (ID) hollow-stem augers. The borings were logged by a representative of Geocal, Inc.

Soil samples were collected using a nominal 2 inch inside diameter California spoon sampler with brass liners. The sampler was driven into the various strata with blows from a 140 pound hammer falling 30 inches, in general accordance with the ASTM D3550 test standard. Penetration resistance values, when properly evaluated, indicate the relative density or consistency of the soils or hardness of the bedrock. Bulk samples of the auger cuttings were obtained from the upper 4 feet of the borings. The samples were visually classified in the field and transported to our laboratory for review by our Project Engineer. Selected samples were programmed for laboratory testing.

After drilling, the borings were backfilled with auger cuttings mixed with bentonite chips and with make-up sand material and the asphalt pavement was patched using compacted cold patch asphalt.

Logs of the subsurface conditions encountered are shown on the attached Figure 2. A description of the material types encountered and symbols used on the logs are shown on the Legend and Notes for Exploratory Borings shown on Figure 3.

Groundwater was not encountered in the borings at the time of drilling, however, groundwater monitoring wells were also installed onsite, to provide groundwater level measurements and for environmental monitoring purposes by Pinyon Environmental.

SUBSURFACE CONDITIONS

The following paragraphs provide a generalized description of the subsurface conditions encountered. For more detailed information, refer to the boring logs shown on Figure 2.

Two of the exploratory borings were drilled in the parking area and encountered the pavement sections summarized in the following table:

Boring ID	Asphalt Pavement (inches)	Aggregate Base Course (inches)
Boring 1-PGT	3¾	4¼
Boring 2-PGT	4	4

The asphalt pavement was in fair condition, the aggregate base course (ABC) generally consisted of sand with silt and gravel. Below the ABC and at the ground surface in the remainder of the borings, artificial fill was encountered which extended to 4 feet deep in Boring 1-PGT to 15 feet in Boring 3-PSB. The artificial fill generally consisted of silty sand with gravel and was occasionally clayey, loose to medium dense, and with fine to coarse gravel. A layer of debris was encountered within the artificial fill in Boring 3-PSB extending from approximately 7 feet to 12 feet deep. The debris fill consisted of coal dust, coke, and brick debris. Natural sands were encountered below the artificial fill in Boring 1-PGT, Boring 3-PGT, and Boring 3-PSB. The sands were poorly graded, silty to clayey, loose to medium dense, and moist. The natural sands extended to the total depth explored in Boring 3-PGT.

Sedimentary bedrock (claystone) was encountered at depths of 5 feet and 1½ feet in Boring 1-PGT and Boring 2-PGT, respectively, and was encountered at a depth of 22 feet in Boring 3-PSB. The claystone bedrock was moist and high plasticity.

Groundwater was not encountered at the depths explored at the time of drilling. Groundwater levels can be expected to fluctuate with varying seasonal and weather conditions, and is directly influenced with the level of the nearby South Platte River.

LABORATORY TESTING

Laboratory tests conducted on selected soil samples consisted of swell-compression, gradation and Atterberg limits, R-value, and water soluble sulfates concentration. Laboratory test results are shown on the attached Figures 4 through 7 and are summarized in Table 1. Laboratory test results are generally consistent with those presented in the 33rd Street Outfall report.

Swell-Compression Tests: Swell-compression tests (ASTM D4546) were conducted on samples of claystone bedrock. The results are shown on Figure 4 indicate that the claystone samples showed low to high swell potential under light loading and wetting and low to moderate swell pressures. The samples exhibited low to moderate compressibility under increased loading.

Gradation and Atterberg Limits Tests: Soil samples were classified in accordance with the American Association of State Transportation Officials (AASHTO) classification system and on the Unified Soil Classification System (USCS). These classification systems are based on the Liquid Limit (ASTM D423), Plastic Limit (ASTM D424), and grain size distribution (ASTM D422). These parameters provide qualitative information on the suitability of the soils for use in engineering applications. These test results are shown on Figures 5 and 6.

The combined gradation and Atterberg limits test results indicate a broad range of soils were encountered onsite; the samples of artificial fill ranged from well graded gravel with sand to clayey sand, with AASHTO soil classifications ranging from A-1-a to A-4(4). The claystone bedrock samples tested had moderate to high plasticity.

R-Value: The R-value is an indication of the soil's ability to transfer traffic loading in the lateral direction. R-value testing was conducted on a combined bulk sample of auger cuttings from the upper four feet from Boring 1-PGT, Boring 2-PGT, and Boring 3-PGT. R-value test results are shown on Figure 7 and indicate an R-value of 14 for the sample of clayey sand with gravel tested, indicating poor to fair pavement support characteristics for the near surface soils encountered.

Water Soluble Sulfates: The water soluble sulfate test is a measurement of the potential degree of sulfate attack on concrete exposed to the onsite soils and bedrock. The relative degree of attack is based on levels of severity described in the American Concrete Institute (ACI) Section 318. The concentration of water-soluble sulfates measured on the selected samples ranged from "not detected" to 0.05%, indicating a negligible level of sulfate attack for concrete exposed to the onsite soils. Based on these results, no special requirements for sulfate resistance are required for concrete exposed to the on-site soils.

LIMITATIONS

This *Addendum No. 1* has been prepared in accordance with generally accepted geotechnical engineering practices used in this area at the time this report was written, and has been prepared for design purposes. The conclusions and recommendations are based upon the data obtained from the borings drilled at the approximate locations shown on Figure 1 and the proposed construction. The nature and extent of the variations at the site may not become evident until excavation is performed. If during construction, soil, bedrock, fill, or groundwater conditions appear to be different from those described, this office should be advised so that re-evaluation of our recommendations may be made. Onsite observation of foundation bearing materials and testing of fill placement by a representative of this office is recommended.

Our professional services were performed using that degree of care and skill ordinarily exercised, under similar circumstances, by reputable geotechnical engineers practicing in this locality at this time. No warranty, expressed or implied, is made. We prepared the report as an aid in design of the proposed project. This *Addendum No. 1* is not a specification or bidding document. Any contractor reviewing this *Addendum No. 1* must draw their own conclusions regarding site conditions and specific construction techniques to be used.

If you have any questions, or if we can be of further service, please call us at (303) 337-0338.

Sincerely,

GEOCAL

By: Walter J. Zitz, P.E.
Project Engineer

COLORADO REGISTERED
RONALD J. VASQUEZ
20098
05/11/15
PROFESSIONAL ENGINEER

Reviewed By: Ronald J. Vasquez, P.E.
Principal Engineer

WJZ/G11.1411.004

Attachment:
Figure 1 – Locations of Exploratory Borings
Figure 2 – Logs of Exploratory Borings
Figure 3 – Legend and Notes for Exploratory Borings
Figure 4 – Swell-Compression Test Results
Figures 5 and 6 - Gradation Test Results
Figure 7 – R-Value Test Report

Table 1 – Summary of Laboratory Test Results

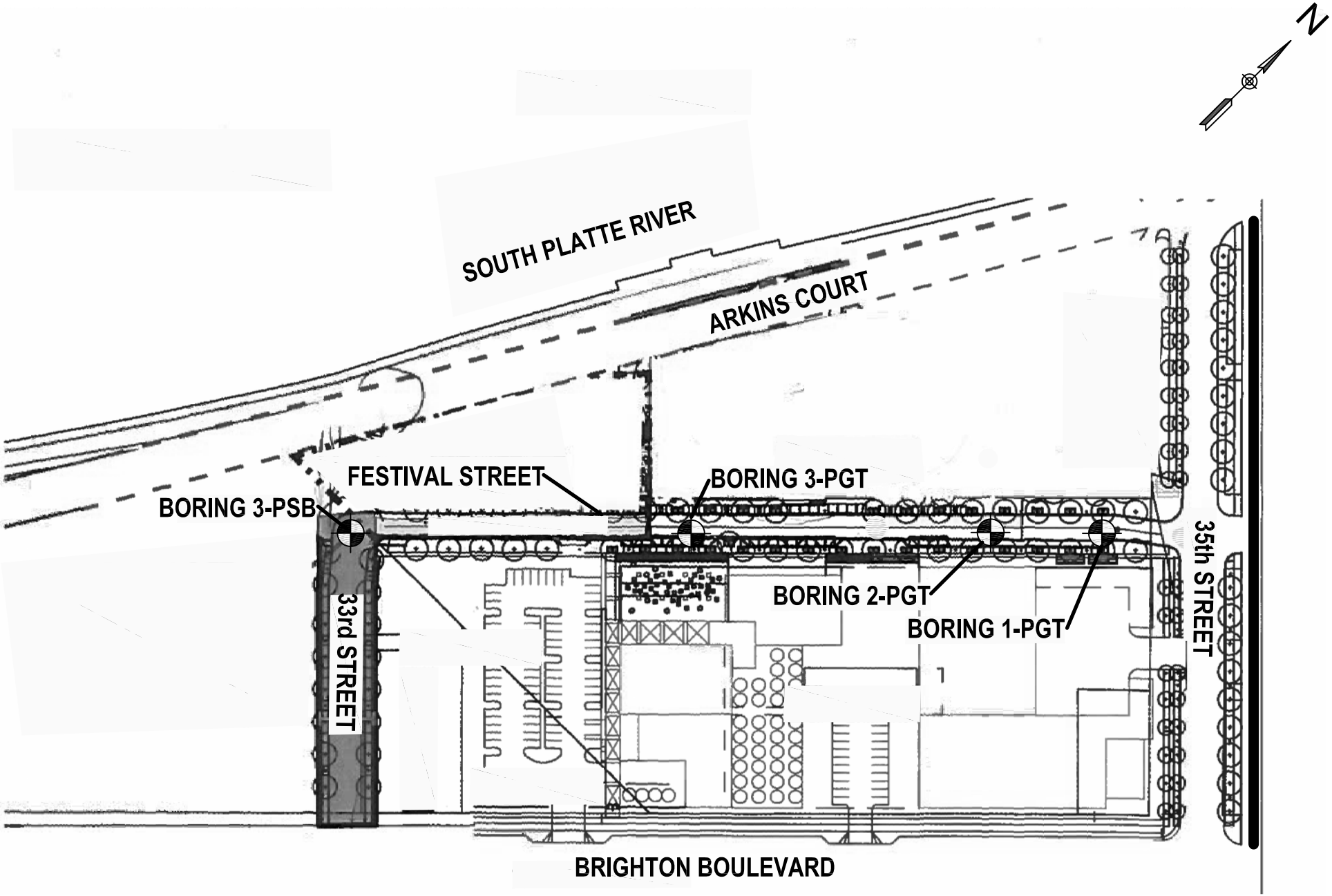

NOTE:
BASE IMAGE ADAPTED FROM ORDINANCE REQUEST EXHIBIT PROVIDED BY WILSON & COMPANY, INC.

G11.1411.004	GEOCAL, INC.	33RD STREET OUTFALL - ADDENDUM LOCATIONS OF EXPLORATORY BORINGS	FIGURE 1

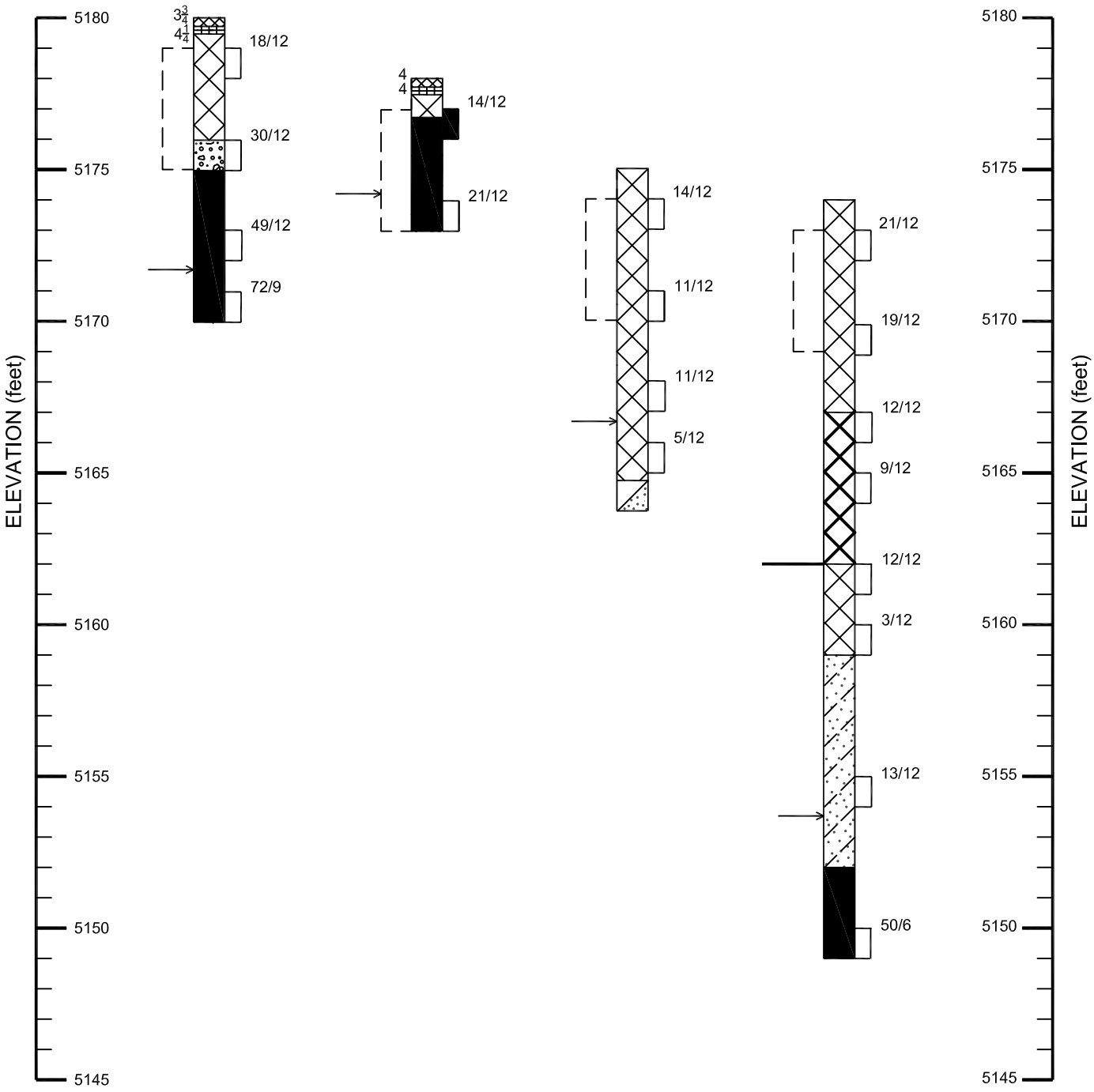

G11.1411.004	GEOCAL, INC.	PROPOSED 33RD STREET OUTFALL LOGS OF EXPLORATORY BORINGS	FIGURE 2

LEGEND

$3\frac{3}{4}$ ASPHALT, thickness in inches shown to the left of the log.

$4\frac{1}{4}$ AGGREGATE BASE COURSE, sand with silt and gravel. Thickness in inches shown to the left of the log.

FILL, silty to clayey sand with gravel, loose to medium dense, non-plastic to low plasticity, moist, grayish to dark brown, fine to coarse gravel, fine to coarse gravel.

DEBRIS FILL, debris, coal dust and slag, moist, non-plastic, fine to coarse coal/slag fragments, possible asbestos contamination.

SAND with SILT, loose, low plasticity, moist, light brown to brown, very fine to coarse sand, trace gravel.

SAND and GRAVEL, medium dense, moist, orangish brown, fine to coarse grained sand, fine to coarse gravel.

SAND with CLAY, to clayey sand, silt, trace gravel, medium dense, moist, low plasticity, brown, fine to coarse sand, fine gravel, laminated.

CLAYSTONE BEDROCK, hard, moist, low to high plasticity, brownish gray to blue-gray, contains variable amounts of fine to medium sand, occasional coal seams.

18/12 Drive sample blow count, indicates that 18 blows from a 140 pound hammer falling 30 inches were required to drive the California or Split Spoon sampler 12 inches.

Indicates 2 inch I.D. California liner drive sample.

Indicates drive sample, Standard Penetration Test, $1\frac{3}{8}$ inch I.D. split spoon sample.

Indicates depth at which caved material accumulated.

Indicates disturbed bulk sample.

Approximate pipe/culvert invert elevation.

NOTES

1. The borings were drilled on April 28, 2015 with CME-55 drill rig equipped with $3\frac{1}{4}$-inch inside diameter hollow-stem augers.
2. Locations of the borings shown on Figure 1 are approximate.
3. The borings are drawn to approximate elevations, estimated from contours provided by Wilson & Company.
4. The lines between strata represent approximate boundaries between material types. Transitions between materials may actually be gradual.
5. Groundwater was not encountered in the borings at the time of drilling, however, fluctuations in the water level may occur with time.

G11.1411.004	GEOCAL, INC.	PROPOSED 33RD STREET OUTFALL LEGEND AND NOTES FOR EXPLORATORY BORINGS	FIGURE 3

SWELL-COMPRESSION TEST

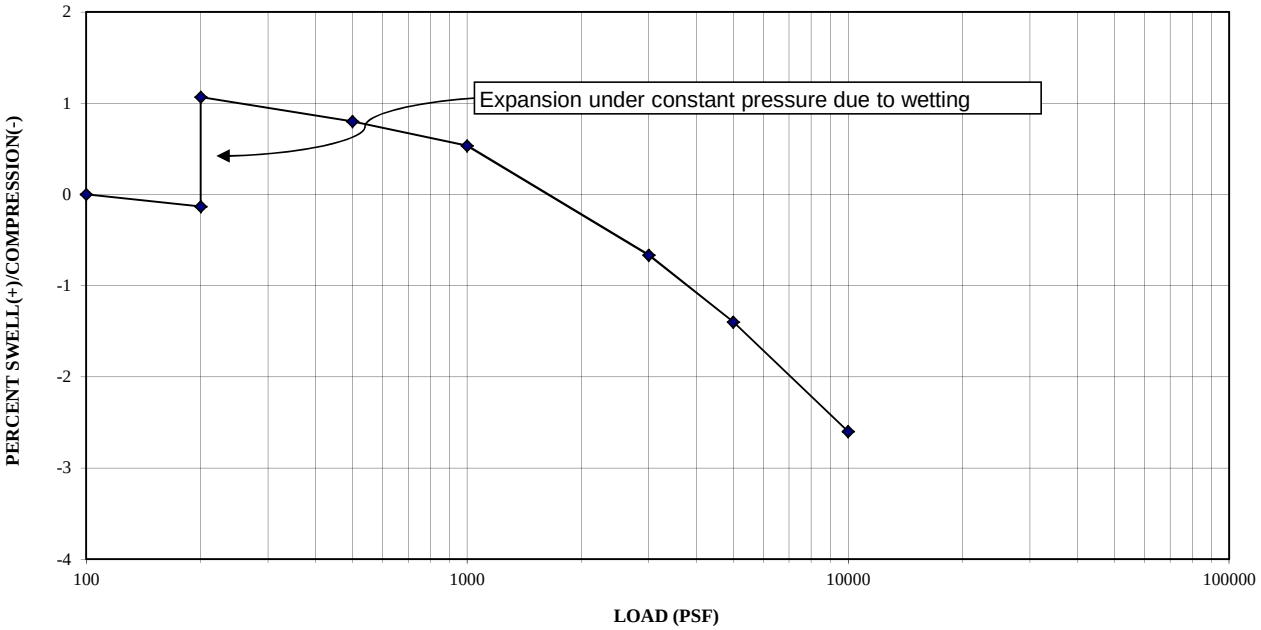

Sample Location	1-PGT
Sample Depth	7 feet
Sample Description	Claystone bedrock
USCS Classification	
AASHTO Classification	

Dry Density	109 pcf
Moisture Content	19.0 %
Volume Change	1.2 %
Swell Pressure	1,650 psf

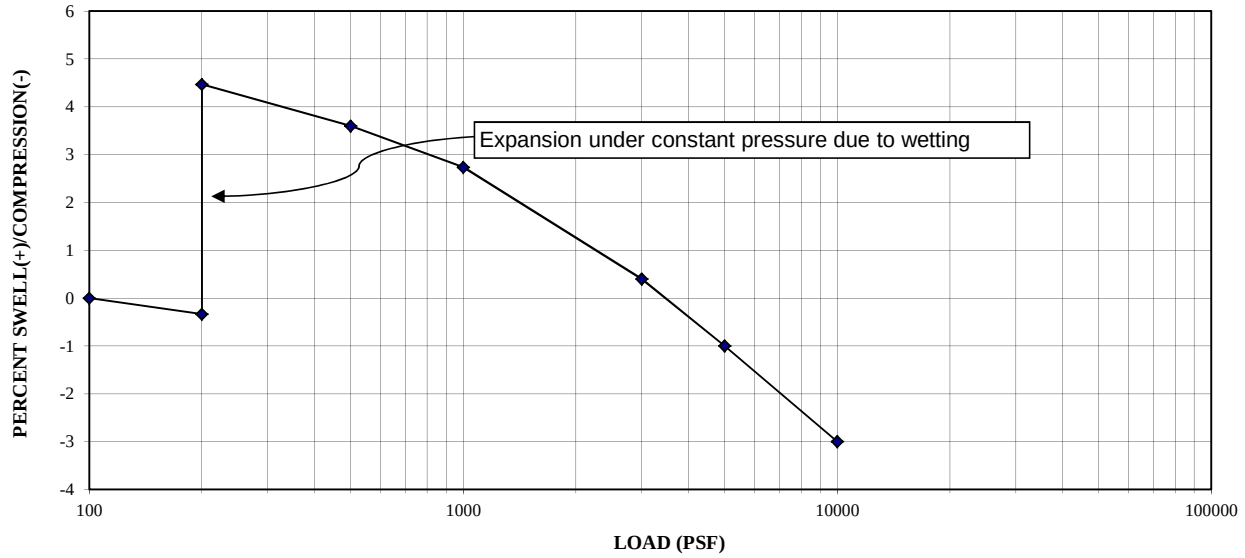

Sample Location	2-PGT
Sample Depth	4 feet
Sample Description	Claystone bedrock
USCS Classification	
AASHTO Classification	

Dry Density	98 pcf
Moisture Content	25.2 %
Volume Change	4.8 %
Swell Pressure	3,500 psf

GEOCAL, INC.	**33rd Street Outfall**	**JOB NO. G11.1411.004**
	SWELL - COMPRESSION TEST RESULTS	**FIGURE NO. 4**

Gradation Test Results

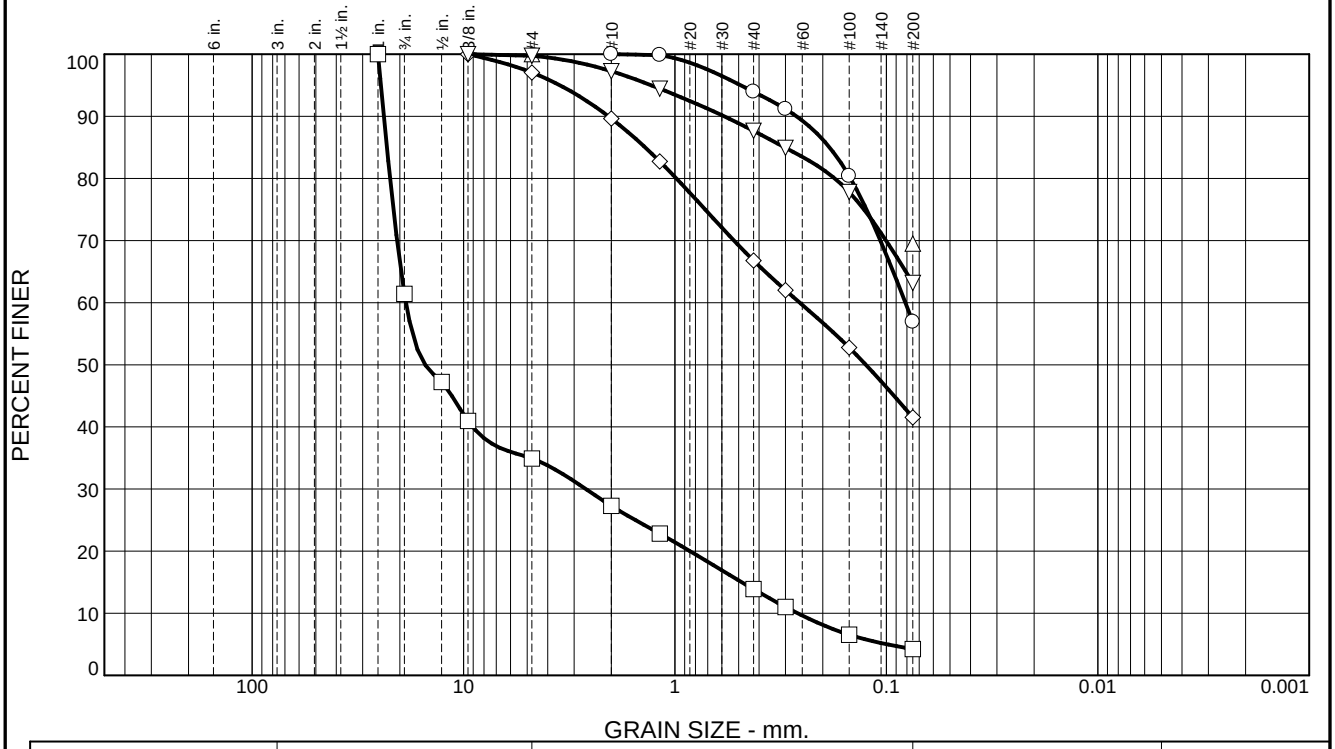

	% +3"	% Gravel	% Sand	% Silt	% Clay
○	0	0	43	57	
□	0	65	31	4	
△	0	0	30	70	
◇	0	3	55	42	
▽	0	0	37	63	

	LL	PL	D_{85}	D_{60}	D_{50}	D_{30}	D_{15}	D_{10}	C_c	C_u
○	37	23	0.1857	0.0813						
□	NV	NP	23.0343	18.7431	15.1997	2.6391	0.4827	0.2626	1.42	71.38
△	54	26	0.6172							
◇	27	17	1.3841	0.2569	0.1250					
▽	31	21	0.3030							

Material Description	USCS	AASHTO
○ claystone bedrock		
□ well-graded gravel with sand, fill	GW	A-1-a
△ claystone bedrock	CH	A-7-6(19)
◇ clayey sand, fill	SC	A-4(1)
▽ sandy lean clay, fill	CL	A-4(4)

Project No. G11.1411.004 **Client:** Wilson & Company

Project: 33rd Street-River North Outfall

○ **Location:** Boring 1-PGT **Depth:** 7 feet **Sample Number:** 7055-1

□ **Location:** Boring 2-PGT **Depth:** 1 foot **Sample Number:** 7055-2

△ **Location:** Boring 2-PGT **Depth:** 4 feet **Sample Number:** 7055-3

◇ **Location:** Boring 3-PGT **Depth:** 1 foot **Sample Number:** 7055-4

▽ **Location:** Boring 3-PGT **Depth:** 9 feet **Sample Number:** 7055-5

Remarks:

GEOCAL, INC.

Figure 5

Gradation Test Results

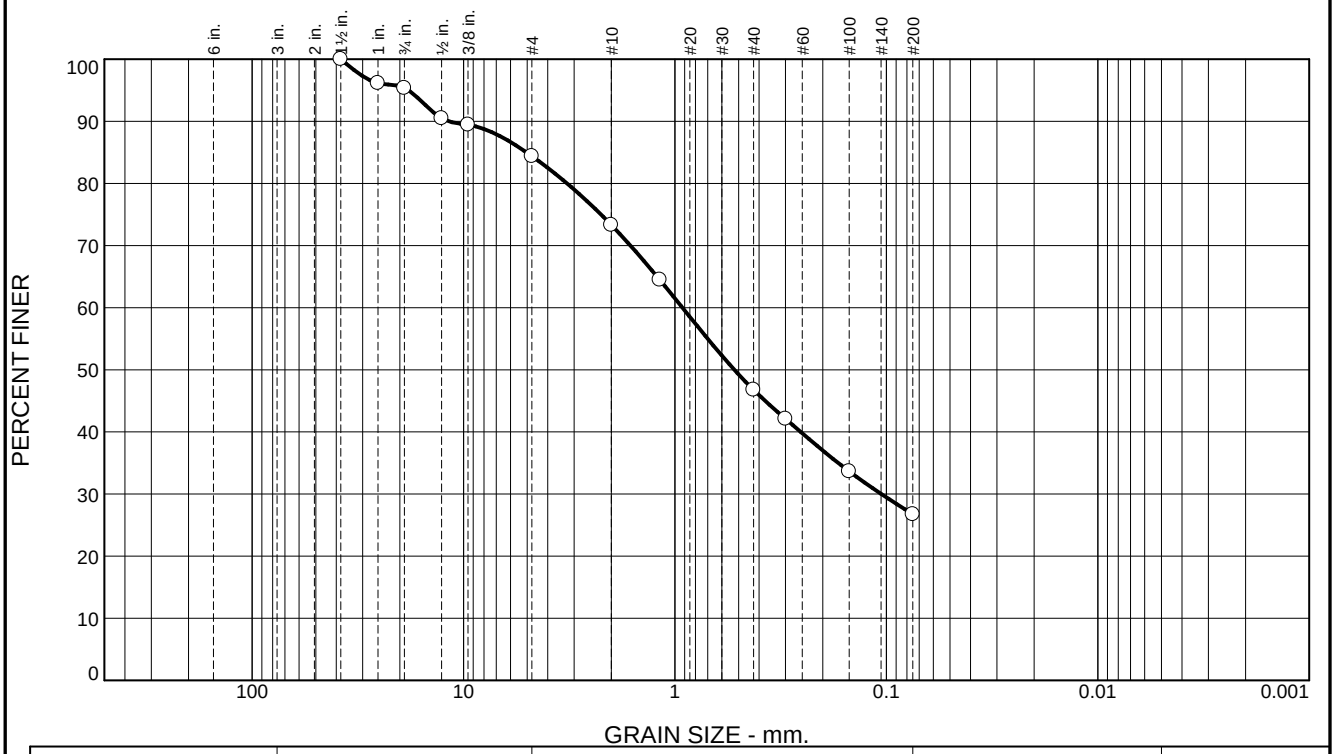

	% +3"	% Gravel	% Sand	% Silt	% Clay
○	0	16	57	27	

	LL	PL	D_{85}	D_{60}	D_{50}	D_{30}	D_{15}	D_{10}	C_c	C_u
○	27	16	5.0424	0.9220	0.5235	0.1056				

Material Description	USCS	AASHTO
○ clayey sand with gravel, fill	SC	A-2-6(0)

Project No. G11.1411.004 **Client:** Wilson & Company

Project: 33rd Street-River North Outfall

○ **Loc.:** Borings 1,2,3-PGT combined **Depth:** 1-4 feet **Sample No.:** 7055-6

Remarks:

GEOCAL, INC.

Figure 6

R-VALUE TEST REPORT

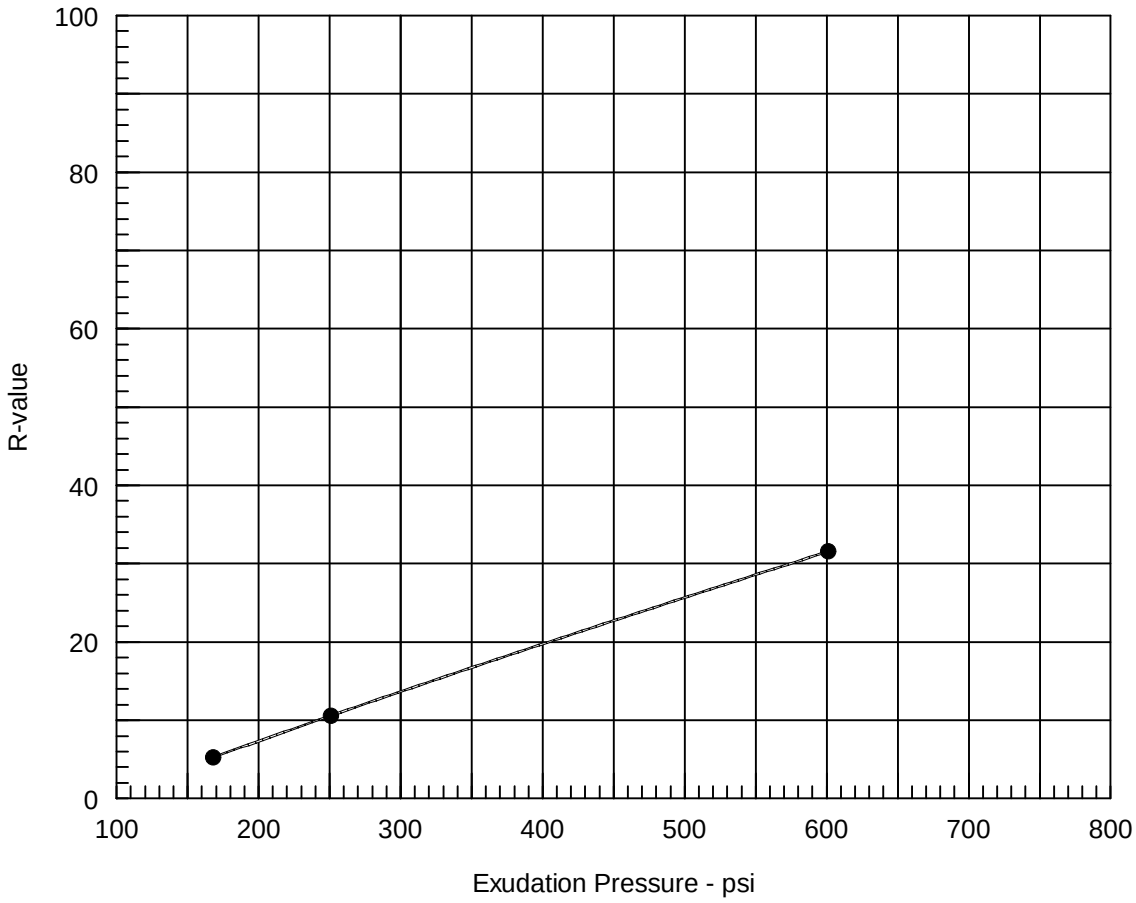

Resistance R-Value and Expansion Pressure - AASHTO T 190

No.	Compact. Pressure psi	Density pcf	Moist. %	Expansion Pressure psi	Horizontal Press. psi @ 160 psi	Sample Height in.	Exud. Pressure psi	R Value	R Value Corr.
1	300	123.0	10.9	0.45	140	2.46	251	11	11
2	350	123.7	9.6	1.82	103	2.52	601	32	32
3	250	121.3	11.9	0.30	150	2.49	168	5	5

Test Results	Material Description
R-value at 300 psi exudation pressure = 14	clayey sand with gravel, fill

Project No.: G11.1411.004
Project: 33rd Street-River North Outfall
Location: Borings 1,2,3-PGT combined
Sample Number: 7055-6 **Depth:** 1-4 feet
Date: 5/8/2015

Tested by: H. Redzic
Checked by: W. Zitz, P.E.

Remarks:
Test performed in accordance with Colorado procedure CP-L 3101.

R-VALUE TEST REPORT

GEOCAL, INC.

Figure 7

TABLE 1

SUMMARY OF LABORATORY TEST RESULTS

Client: **Wilson & Company**

Project #: **G11.1411.004**

Project Name: **33rd Street Outfall**

Sample Location		Natural	Natural	Gradation		Percent	Atterberg Limits		Swell	Water	R Value	AASHTO	
Boring No.	Depth (feet)	Moisture Content (%)	Dry Density (pcf)	Gravel (%)	Sand (%)	Passing No. 200 Sieve	Liquid Limit (%)	Plasticity Index (%)	Pressure (psf)	Soluble Sulfates (%)	at 300psi Exudation Pressure	Class. (Group Index)	Soil or Bedrock Description
1-PGT	7	19.0	109	0	43	57	37	14	1,650				Claystone bedrock
2-PGT	1			65	31	4	NV	NP				A-1-a	Well-graded gravel with sand, fill
2-PGT	4	25.2	98	0	30	70	54	28	3,500	0.05			Claystone bedrock
3-PGT	1	13.9	114	3	55	42	27	10		Not detected		A-4(1)	Clayey sand, fill
3-PGT	9	11.4	101	0	37	63	31	10				A-4(4)	Sandy lean clay, fill
1,2,3-PGT	1-4			16	57	27	27	11			14	A-2-6(0)	Clayey sand with gravel, fill

DENVER
PARKS & RECREATION

RIVER NORTH PARK

BID SET

Technical Specifications



October 2018

Prepared by:

w e n k

ASSOCIATES
PLANNERS &
LANDSCAPE
ARCHITECTS

TECHNICAL SPECIFICATIONS **TABLE OF CONTENTS**

Section Number Section Title

DIVISION 1 - GENERAL REQUIREMENTS

01 11 00 Summary of Work
01 25 00 Substitutions
01 29 00 Measurement and Payment
01 29 73 Schedule of Values
01 31 13 Coordination
01 31 19 Project Meetings
01 32 13 Schedule
01 32 19 Submittals
01 33 23 Shop and Working Drawings, Product Data and Samples
01 35 23 Construction Safety
01 42 10 Regulatory Requirements
01 42 16 Definitions and Conventions
01 42 23 Administration, Procedures, Codes
01 43 00 Quality Assurance
01 45 16 Contractor Quality Control
01 50 00 Temporary Facilities and Controls
01 50 01 Traffic and Pedestrian Control
01 57 13 Erosion and Sedimentation Control
01 60 00 Material and Equipment
01 66 00 Storage and Protection
01 71 23 Layout of Work and Surveys
01 74 23 Cleaning
01 77 00 Contract Closeout
01 78 23 Operation and Maintenance Data
01 78 35 Warranties and Bonds
01 78 39 Contract Record Documents
01 99 90 Standard Forms

DIVISION 2 - SITE WORK

02 41 00 Demolition

D**IVISION 3 - CONCRETE**

03 30 00 Cast-in-Place Concrete
03 31 00 Structural Concrete

DIVISION 5 – METALS

05 5200 Guardrail/Handrail Metal Fabrication

DIVISION 6 –Carpentry

06 10 00 Miscellaneous Carpentry

DIVISION 9 –Painting & Coating

09 93 13 Painting

DIVISION 12 - Site Furnishings
12 83 00 Site Furnishings

DIVISION 31 – EARTHWORK
31 11 00 Clearing and Grubbing
31 20 00 Earth Moving
31 23 16 Excavation and Backfilling of Trenches
31 23 19 Dewatering
31 32 50 Watering

DIVISION 32 – EXTERIOR IMPROVEMENTS
32 05 13 Structural Soil
32 11 16 Aggregate Base Course
32 12 16 Asphalt Pavement
32 13 13 Concrete Walks, Curbs, and Miscellaneous Flatwork
32 14 00 Concrete Unit Pavers
32 15 40 Crushed Stone Paving
32 17 32 Pavement Markings
32 18 16 Playground Protective Surfacing
32 32 19 Modular Block Retaining Wall
32 80 00 Irrigation Systems
32 84 33 Automatic Irrigation Controllers
32 91 13 Soil Preparation
32 91 20 Topsoil
32 92 20 Native Seeding
32 92 23 Sodding
32 93 00 Trees, Plants, and Groundcovers
32 97 00 Landscape Maintenance

DIVISION 33 – UTILITIES
33 14 16 Site Water Utility Distribution Piping
33 44 00 Storm Sewerage
33 46 00 Subdrainage Systems

APPENDICES
1. Geotechnical Report
2. Materials Management Plan
3. Project Specific Management Plan

DIVISION 1 – GENERAL REQUIREMENTS

SECTION 01 11 00 SUMMARY OF WORK

PART 1 - GENERAL

1.1 RELATED DOCUMENTS

A. Contract Drawings and general provisions of the Contract, including General and Supplementary Conditions and Division 01 Specification Sections, apply to this Section.

1.2 SUMMARY

A. The Work specified in this contract consists of furnishing all management, supervision, labor, materials, tools, equipment, services, testing, and incidentals for the construction of the Work indicated in the Contract Documents including lump sum items and unit price items.

B. Reference General Conditions as listed:
1. Article 301 “Consideration (Contractor’s Promise of Performance)”.
2. Article 306 “Working Hours and Schedule”.
3. Title 8 “Protection of Persons and Property”.
4. Article 804 “Protection of Municipal, Public Service, or Public Utility Systems”.

1.3 SITE CONDITIONS

A. The Contractor acknowledges satisfaction as to the nature and location of the Work, all of the general and local conditions, particularly those bearing upon availability of transportation, access to the site, disposal, handling and storage of materials, availability of labor, water, power, roads, and uncertainties of weather, or similar physical conditions at the site, the conformation and conditions of the ground, the character of equipment and facilities needed preliminary to and during work, and all other matters that can in any way affect the work or the cost thereof under this contract.

B. The Contractor further acknowledges, by submission of a bid and on each change in work proposal, satisfaction as to the character, quality and quantity of all surface and subsurface materials and all features on top of the surface or at worksites that would be encountered from his inspection of the site and from reviewing available records of exploratory work furnished by the City. Failure by the Contractor to become acquainted with the physical conditions of the sites and all the available information will not relieve the Contractor from responsibility for properly estimating the difficulty or cost of performing the Work.

C. The Contractor warrants that as a result of examination and investigation of all the aforesaid data and the site, that the Contractor can perform the Work in a good and workmanlike manner and to the satisfaction of the City. The City assumes no responsibility for any representations made by any of its officers or agents during or prior to the execution of this contract unless such representation is expressly stated in the contract.

1.4 DESCRIPTION OF WORK

A. The following work items are included in these specifications: earthwork; utilities; erosion control; concrete walks and other flatwork; structural concrete; pavers; concrete walls; gabion walls; bin block walls; lighting; electrical; irrigation; topsoil and soil preparation; sodding;

native seeding; tree removal; planting new trees and shrubs; irrigation system, new utilities, play surfacing, drainage improvements, asphalt demolition and re-use, concrete demolition and re-use, and street modifications as listed in the Table of Contents of these specifications and as shown per the Contract Drawings. The materials and installation methods specified herein are to be considered standard for all work ordered by and performed for the Department of Parks and Recreation in the construction of new facilities in the parks.

PART 2 - PRODUCTS (Not used)

PART 3 - EXECUTION

3.1 CONTRACTOR'S DUTIES

A. Except as otherwise specified, furnish the following to the full extent required by the contract:
   1. Labor, superintendence, supervision and products.
   2. Construction equipment, tools, machinery and materials.
   3. Utilities required for construction and related activities.
   4. Other facilities and services necessary to properly execute and complete the Work, including security for worksite, testing and storage and protection of all materials awaiting incorporation into the Work, providing a safe working environment for workers, City representatives, and the public in accordance with all local, state and federal requirements.

B. Prosecute the Work as specified and in a timely manner. Submit a schedule of Work that will be performed at times other than during the eight-hour working day of Monday through Friday, daylight hours. Submit this schedule five working days prior to the beginning of Work to the Project Manager for review and acceptance. Approval to work at night may be obtained after Contractor presents a written program outlining special precautions to be taken to control the extraordinary hazards presented by night work. That program shall include, but not limited to, supplementary lighting of work areas, availability of medical facilities, security precautions, and noise limitations.
   1. Noise Ordinance variances through Denver Department of Environmental Health require several weeks advance public notice and approval is not guaranteed.

3.2 COORDINATION

A. Coordinate prosecution of the Work with those public utilities, governmental bodies, private utilities and other contractors performing work on and adjacent to the worksites. Eliminate or minimize delays in the Work and conflicts with those utilities, bodies and contractors. Schedule governmental, private utility and public utility work that relies upon survey points, lines and grades established by the Contractor to occur immediately after those points, lines and grades have been established. Confirm coordination measures for each individual case with the City in writing.

B. In the coordination effort of work by others, the Contractor shall obtain and refer to equipment locations and other layouts, as available, to avoid interface problems.

C. The City reserves the right to permit access to the site of the Work for the performance of work by other contractors and persons at such times that the City deems proper. The exercise of such

reserved right shall in no way or to any extent relieve the Contractor from liability for loss and damage to the work due to or resulting from its operations or from responsibility for complete execution of the Contract. The Contractor shall cooperate with other contractors and persons in all matters requiring common effort.

3.3 CONTRACTOR USE OF WORKSITE

A. Confine worksite operations to areas permitted by law, ordinances, permits and the contract.

B. Consider the safety of the Work and that of the people and property on and adjacent to the worksite when determining amount, location, movement and use of materials and equipment on worksite.

C. Do not load worksite with equipment and products that would interfere with the Work. Only equipment, tools or materials required for this Work may be stored at the worksite.

D. Protect products, equipment and materials stored on worksite.

E. Relocate stored products, equipment and materials which interfere with operations of City, government bodies, public and private utilities, and other contractors.

PART 4 - MEASUREMENT AND PAYMENT

4.1 MEASUREMENT

A. Measurement will be made by the contract unit specified.

4.2 PAYMENT

A. Payment will be made at the contract unit price for work under this section including any and all necessary relocations requested by the City. The cost of the work described in this section shall be included in the Contract price.

END OF SECTION 01 11 00

SECTION 01 25 00 SUBSTITUTIONS

PART 1 - GENERAL

1.1 RELATED DOCUMENTS

A. Contract Drawings and general provisions of the Contract, including General and Supplementary Conditions and Division 01 Specification Sections, apply to this Section.

1.2 SUMMARY

A. This Section includes submittal requirements for the approval of a different material, equipment, or process than is described in the Contract Documents.
   1. If the substitution changes the scope of work, contract cost or contract time, a Change Order is required.
   2. Contract Record Drawings and specifications must include all approved substitutions even if a Change Order is not issued.

B. Reference General Conditions Article 406 “Substitution of Materials and Equipment”.

1.3 QUALITY CONTROL

A. The substitution must provide the same quality as what it is replacing. The level of quality is defined by:
   1. Maintenance and operating cost.
   2. Reliability.
   3. Durability.
   4. Life expectancy.
   5. Ease of cleaning.
   6. Ability to be upgraded as needed.
   7. Ease of interacting with other systems or components.
   8. Ability to be repaired.
   9. Availability of replacement parts.
   10. Established history of use in similar environments.
   11. Performance equal or superior to that which it is replacing.

1.4 SUBMITTAL

A. Refer to Division 01 Sections “Submittals” and “Shop and Working Contract Drawings, Product Data, and Samples” for submittal procedures.

B. A complete Request for Substitution using the form included in Division 01 Section “Standard Forms” must be made at least sixty (60) days prior to when an order needs to be placed or a method needs to be changed.

C. The submittal shall contain, as appropriate, detailed product data sheets for the specified items and the substitution. Samples and shop Contract Drawings shall also be submitted of the substitution as applicable. The submittal shall contain all the data required to be submitted for acceptance of the originally specified item or process.

D. The submittal shall contain all the applicable information required in Article 1.6, below.

E. A signed statement as outlined in Article 1.7, below, must accompany the Request for Substitution.

1.5 INFORMATION

A. Provide the following information as applicable with the Request for Substitution on the item or process that is being requested to be substituted:
   1. A complete description of the item or process.
   2. Utility connections including electrical, plumbing, HVAC, fire protection and controls.
   3. The physical dimensions and clearances.
   4. A parts list with prices.
   5. Samples of color and texture.
   6. Detailed cost comparisons of the substitution and the contract specified item or process.
   7. Manufacturer warranties.
   8. Energy consumption over a one-year period.
   9. What local organization is certified to maintain the item.
   10. Performance characteristics and production rates.
   11. A list of any license fees or royalties that must be paid.
   12. A list of all variations for the item or method specified.
   13. A list of at least three other projects of similar nature to this contract where the products or methods have been in use for at least one year including telephone number and name of the person to contact at these other projects.
   14. An analysis of the effect of the substitution on the schedule and contract cost and on the overall project as it relates to adjoining work.

1.6 SUBSTITUTION REQUEST

A. The formal Request for Substitution will be evaluated by the Project Manager and the Designer of Record based on the following criteria:
   1. Compatibility with the rest of the project.
   2. Reliability, ease of use and maintenance.
   3. Both initial and long term cost.
   4. Schedule impact.
   5. The willingness of the Contractor to share equally in any cost savings.
   6. The ability of the item or process to meet all applicable governing regulations, rules and laws along with funding agency requirements.
   7. The cost of evaluating the substitution.

B. Based upon the above evaluation the Project Manager will make a final determination of what is in the best interest of the City and either approve, disapprove or approve as noted the requested substitution.

1.7 CONDITIONS

A. As a condition for submitting a Request for Substitution the Contractor waives all rights to claim for extra cost or change in contract time other than those outlined in the request and approved by the Project Manager. The Contractor, by submitting a Request for Substitution, also accepts all liability for cost and scheduling impact on other contractors or the City due to the substitution.

B. Included with the Request for Substitution shall be the following statement:
   1. "The substitution being submitted is equal to or superior in all respects to the contract-required item or process. All differences between the substitution and the contract-required item or process are described in this request along with all cost and scheduling data."

C. The statement shall be signed and dated by the Contractor's Superintendent.

PART 2 - PRODUCTS (Not Used)

PART 3 - EXECUTION (Not Used)

PART 4 - MEASUREMENT AND PAYMENT

4.1 MEASUREMENT

A. No separate measurement shall be made for work under this Section.

4.2 PAYMENT

A. No separate payment will be made for work under this Section. The cost of the work described in this Section shall be included in the Contract price.

END OF SECTION 01 25 00

SECTION 01 29 00 MEASUREMENT AND PAYMENT

PART 1 - GENERAL

1.1 RELATED DOCUMENTS

A. Contract Drawings and general provisions of the Contract, including General and Supplementary Conditions and Division 01 Specification Sections, apply to this Section.

1.2 SUMMARY

A. This Section includes Pay Item descriptions for measurement and payment of Work completed.

1.3 DESCRIPTION

A. General:
   1. NOTE: The Pay Item descriptions listed herein are hypothetical and will vary with each project. Do not prepare pay estimates based on these descriptions.
   2. All measurements and payments will be based on work completed in strict accordance with the Drawings and specifications for the project.
   3. The method of measurement and basis of payment described are for the work itemized in the Bid Form and in the sections of the specifications. Items may include work within a single section or in more than one section.
   4. See the General Conditions for additional information pertaining to measurement and payment. This section is intended to supplement the General and Special Conditions.

B. Measurement:
   1. Unless otherwise specified, all longitudinal measurements will be made horizontally, and computations will be based on the dimensions shown on drawings and details. No measurement will be made by weight tickets.
   2. Quantities will be rounded off to the nearest whole number.
   3. The Contractor shall, in the presence of the Project Manager, verify all measurements and quantities required for payment by the unit price method.
   4. Contractor shall provide necessary equipment, workers, and survey personnel as required for measurements.

C. Units:
   1. Measurement by Volumes: Measurement by cubic dimension using mean length, width and height or thickness. Longitudinal measurements will be made horizontally.
   2. Measurements by Area: Measured by square dimensions using mean length and width or radius, measured horizontally.
   3. Linear Measurement: Measured by linear dimension at the item centerline or mean chord.
   4. Measured by Lump Sum or Per Each: Item inclusion as specified by the bid item description.

D. Payment:
   1. Unit bid prices, as quoted in the Bid Schedule, shall constitute full compensation for labor, materials, equipment, rentals, overhead, profit and incidentals to complete all work for each pay item and for all risk, loss, damage, or expense of whatever nature arising from the nature of the work or prosecution thereof.

2. Work or materials that are essential to the work, but for which there are no pay items, will not be measured and paid for separately, but shall be included in other items of work.
3. Payment for work listed as lump sum bid items completed under this contract shall be paid for on a lump sum fixed price basis.
4. Final payment for work governed by unit prices will be made on the basis of the measurements and quantities accepted by the Project Manager multiplied by the unit price for work which is incorporated in or made necessary by the Work.

PART 2 - PRODUCTS (Not Used)

PART 3 - EXECUTION (Not Used)

PART 4 - MEASUREMENT AND PAYMENT

Refer to each specification section for Measurement and Payment information relative to the contents of that section.

END OF SECTION 01 29 00

SECTION 01 29 73 SCHEDULE OF VALUES

PART 1 - GENERAL

1.1 RELATED DOCUMENTS

A. Contract Drawings and general provisions of the Contract, including General and Supplementary Conditions and Division 01 Specification Sections, apply to this Section.

1.2 SUMMARY

A. This Section includes requirements for preparing and submitting the Schedule of Values as referenced in the General Conditions. The Schedule of Values will be built upon a breakdown of the Work using specification sections and milestones. The Work also includes the preparing and submitting of updated copies of the Schedule of Values if the Schedule of Values is affected by change orders.
   1. A Schedule of Stored Material is a detailed cost breakdown for permanent materials that will be temporarily stored prior to their being installed and for which the Contractor seeks partial payments. The Schedule of Stored Material will be incorporated as a part of the Schedule of Values.
   2. Within fourteen (14) calendar days of issuance of the Notice to Proceed, the Contractor shall submit the Schedule of Values including the Schedule of Stored Material if applicable. The Schedule of Values and Schedule of Stored Material used to prepare the work/cost breakdown for the Schedule of Values will be used for the Contractor's billings.
   3. Any contract allowances shall be included in the Schedule of Values. Expenditure of allowances shall be done through the use of the Allowance Authorization form. Use of this form does not increase or decrease the contract value.

A. Reference the General Contract Conditions as listed:
   1. Article 902 "Payment Procedure".
   2. Article 903 "Schedule of Values in Lump Sum Contracts".
   3. Article 906 "Applications for Payment".

B. Related Sections:
   1. Division 01 Section "Submittals".
   2. Division 01 Section "Shop and Working Drawings, Product Data, and Samples".
   3. Division 01 Section "Standard Forms".

1.3 DEFINITIONS

A. Allowance: A monetary amount specified and included in the construction contract for a certain item of work whose details are not yet determined at the time of contracting.

1.4 SUBMITTAL

A. The Schedule of Values shall be submitted in a format approved by the Project Manager.

B. The Schedule of Values shall identify each item of work. Work items in the Schedule of Values shall represent all work and shall be referenced with the Technical Specifications section numbers, specification subparagraph, specification section title and the bid item number used for the Schedule of Prices and Quantities when applicable. The Schedule of Values shall address the subcontractor, fabricator or supplier furnishing the materials and or labor for each work item.

C. Upon request by the City, the Contractor shall support values given with the data which will substantiate the correctness of the values.

D. The Schedule of Values will be utilized only as a basis for review of the Contractor's application for progress payment on Unit Price Bids. The Schedule of Values will be utilized on a Lump Sum Bid to determine change order costs.

1.5 REVIEW AND RESUBMITTAL

A. If review by the City indicates that changes to the Schedule of Values are required, the Contractor shall revise and resubmit the Schedule of Values.

PART 2 - PRODUCTS (Not Used)

PART 3 - EXECUTION

3.1 PREPARING SCHEDULE OF VALUES

A. Breakdown of the items used in the Schedule of Values shall include costs as follows:
   1. Delivered cost of product with applicable taxes paid.
   2. Total installation cost with overhead and profit.
   3. Breakdown costs of each lump sum item with a list of products and major operations for which the Contractor seeks to receive progress payments to recover his costs for that bid Item.
   4. Each unit price item as listed in the bid Schedule of Prices and Quantities shall list products and major operations for which the Contractor seeks to receive progress payments for that bid item.

3.2 PREPARING SCHEDULE OF VALUES OF STORED MATERIAL

A. The Contractor shall submit with the Schedule of Values an indication of whether products will be stored on or off the worksite. The Schedule of Stored Material shall show quantities and types of products that will be stored.

B. Material allowances consist of only the net cost of the product, the cost of delivery and unloading at the storage site, the cost of applicable sales taxes and all discounts.

C. In no case will the cost paid for a permanent material be greater than ninety percent (90%) of the contract price for the work in which they are included.

3.3 PAYMENT FOR STORED MATERIALS

A. Only materials that are described in the specifications and on the drawings will be considered permanent materials. Permanent materials are materials that will be left in the work after the contract is completed.

B. Nothing in these specifications shall be interpreted as requiring the City to pay for stored materials. The Project Manager shall decide on a case-by-case basis whether stored materials shall be paid for. No payment will be made for stored materials which have not been submitted and accepted.

C. The Contractor must, at all times, store permanent materials in accordance with manufacturer's recommendations. Any material not properly stored will not be paid for. Amounts will be deducted from payments for any stored permanent material previously paid for and subsequently found to be improperly stored or not present, based upon a physical inventory of stored permanent material.

D. Only the neat line quantity of material needed for the finished product may be paid for.

E. All requests for stored permanent material payment must be accompanied by paid invoices clearly showing the quantity of permanent material, the type of permanent material and discounts or rebates and the net amount paid to the supplier along with a certificate stating that the permanent material is free of any liens or judgments preventing its use by the City.

F. All permanent material stored off site, for which payment is being requested must be insured and stored in bonded, insured warehouses.

G. Any permanent material on which payment is requested must be in such a form that it cannot be used on work other than this contract, or stored in a manner acceptable to the Project Manager to ensure that the permanent material cannot be used on work other than this contract.

3.4 ALLOWANCE AUTHORIZATION AND PAYMENT

A. Contractor shall request written approval for expenditure of any contract allowances PRIOR TO performing the Work involved. List work to be performed and estimated cost in the requesting correspondence.

B. Original copies of all invoices and receipts must be submitted with the Allowance Authorization as part of the request for payment.

C. Using the format provided by the City, the Contractor's request for payment of all contract allowances shall be included in the Schedule of Values.

PART 4 - MEASUREMENT AND PAYMENT

4.1 MEASUREMENT

A. No separate measurement shall be made for work under this Section.

4.2 PAYMENT

A. No separate payment will be made for work under this Section. The cost of the work described in this Section shall be included in the Contract price.

END OF SECTION 01 29 73

SECTION 01 31 13 COORDINATION

PART 1 - GENERAL

1.1 RELATED DOCUMENTS

A. Contract Drawings and general provisions of the Contract, including General and Supplementary Conditions and Division 01 Specification Sections, apply to this Section.

1.2 SUMMARY

A. This Section includes requirements for project and construction coordination, supervision, and administration for the Work, including but not necessarily limited to:
   1. Coordination.
   2. Administrative and supervisory personnel.
   3. General installation provisions.
   4. Cleaning and protection.
   5. Utilities and site work.

B. Reference General Conditions as listed:
   1. Title 3 “Contractor Performance and Services”.
   2. Article 301 “Consideration (Contractor’s Promise of Performance)”.
   3. Article 308 “Communications”.

C. Related Sections:
   1. Division 01 Section “Layout of Work and Surveys”.
   2. Division 01 Section “Administration, Procedures, Codes”.
   3. Division 01 Section “Project Meetings”.

1.3 GENERAL COORDINATION

A. General:
   1. The Contractor shall ensure that each entity involved in the performance of the Work shall cooperate in the overall coordination of the Work; promptly, when requested by the Contractor, furnish information concerning the entity’s portion of the Work; and respond promptly and reasonably to the decisions and requests of persons designated with coordination, supervisory, administrative, or similar authority.
   2. The Contractor shall, where necessary, prepare memoranda for distribution to each party involved outlining special procedures required for coordination. Include such items as required notices, reports, and attendance at meetings.
   3. Prepare similar memoranda for the Owner and separate Contractors where coordination of their work is required.

B. Administrative Procedures: Coordinate scheduling and timing of required administrative procedures with other construction work. Such administrative activities include, but are not limited to, the following:
   1. Preparation of schedules
   2. Installation and removal of temporary facilities
   3. Delivery and processing of submittals
   4. Progress meetings

5. Project close-out activities

C. Conservation: Coordinate construction activities to ensure that operations are carried out with consideration given to conservation of energy, water and materials. Salvage materials and equipment involved in performance of, but not actually incorporated in, the Work. Refer to other sections for disposition of salvaged materials that are designated as the City's property.

D. Site Utilization: In addition to the site utilization limitations and requirements shown on the Contract Drawings and indicated by the Contract Documents, administer the allocation of available space equitably among entities needing access and space, so as to produce the best overall efficiency in the performance of the Work. Schedule deliveries so as to minimize the space and time requirements for storage of materials and equipment on the site; but do not unduly risk delays in the Work.

E. Coordination Meetings: Include in scheduled meetings, coordination of various entities and activities as set forth in Division 01 Section "Project Meetings". Where necessary, schedule additional coordination meetings for this purpose on an as-needed basis.

F. Layout: It is recognized that the Contract Documents are diagrammatic in showing certain physical relationships of the various elements and systems and their interfacing with other elements and systems. Establishment and coordination of these relationships is the exclusive responsibility of the Contractor. Do not scale the Contract Drawings. Layout and arrange all elements to contribute to safety, efficiency and to carry the harmony of design throughout the Work. In case of conflict or un-dimensioned locations, verify required positioning with the Project Manager. The Contractor shall provide surveying for the layout of all improvements including both horizontal and vertical control, in accordance with the requirements of Division 01 Section "Construction Surveying".

G. Substrate Examination: The Contractor shall ensure that the subcontractor of each element of the Work examines the conditions of the substrate to receive the work, dimensions and spaces adjacent, tolerances, interfacing with other elements and services, and the conditions under which the Work will be performed. The Contractor shall require each subcontractor to notify the Contractor in writing of conditions detrimental to the proper or timely completion of the Work, and ensure that they do not proceed with the Work until unsatisfactory conditions have been corrected in a manner acceptable to the subcontractor.

1.4 COMPLETE SYSTEMS

A. It is the intent of the Contract Documents that the system be complete and functional to provide the intended or specified performance. The Contractor shall provide all incidental items and parts necessary to achieve this requirement.

1.5 COMPATIBILITY

A. Provide products and equipment which are compatible with other work requiring mechanical interface including connections, control devices, water, drain and other piping connections. Verify requirements and other interface requirements before ordering equipment and resolve conflicts that may arise.

PART 2 - PRODUCTS (Not Used)

PART 3 - EXECUTION

3.1 GENERAL INSTALLATION PROCEDURES

A. Require the subcontractor of each major component to inspect both the substrate and conditions under which work is to be performed. Do not proceed until unsatisfactory conditions have been corrected in an acceptable manner.

B. Inspect materials or equipment immediately upon delivery and again prior to installation. Reject damaged and defective items. Re-check measurements and dimensions before starting each installation.

C. Manufacturer's Instructions: Comply with manufacturer's installation instructions and recommendations, to the extent that those instructions and recommendations are more explicit or stringent than requirements contained in Contract Documents.

D. Installation:
   1. Provide attachment and connection devices and methods necessary for securing work. Secure work true to line and level. Allow for expansion and building movement.
   2. Install each component during weather conditions and the Work status that will ensure the best possible results. Isolate each part of the completed construction from incompatible materials as necessary to prevent deterioration.
   3. Coordinate work with required inspections and tests, to minimize the necessity of uncovering completed construction for that purpose.

E. Visual Effects: Provide uniform joint widths in exposed work. Arrange joints in exposed work to obtain the best visual effect. Refer questionable choices to the Project Manager for final decision.

F. Mounting Heights: Where mounting heights are not indicated, install individual components at standard mounting heights recognized within the industry for the particular application indicated. Refer questionable mounting height decisions to the Project Manager for final decision.

3.2 CLEANING AND PROTECTION

A. During handling and installation, clean and protect construction in progress and adjoining materials in place. Apply protective covering where required to ensure protection from damage or deterioration prior to achieving substantial completion.

B. Clean and maintain completed construction as frequently as necessary through the remainder of the construction period. Adjust and lubricate operable components to ensure operability without damaging effects.

PART 4 - MEASUREMENT AND PAYMENT

4.1 MEASUREMENT

A. No separate measurement shall be made for work under this Section.

4.2 PAYMENT

A. No separate payment will be made for work under this Section. The cost of the work described in this Section shall be included in the Contract price.

END OF SECTION 01 31 13

SECTION 01 31 19 PROJECT MEETINGS

PART 1 - GENERAL

1.1 RELATED DOCUMENTS

A. Contract Drawings and general provisions of the Contract, including General and Supplementary Conditions and Division 01 Specification Sections, apply to this Section.

1.2 SUMMARY

A. This Section includes requirements for the Contractor, including his field superintendent and quality control representative, to attend meetings scheduled by the City for the collection and dissemination of information related to the subject contract.
   1. The Contractor will prepare the minutes of each meeting and distribute them to each of the participants.

1.3 OTHER MEETINGS

A. The Contractor will be advised of times, dates, and places of contract meetings.

PART 2 - PRODUCTS (Not Used)

PART 3 - EXECUTION

3.1 PRECONSTRUCTION MEETING

A. A Preconstruction Meeting will be scheduled by the City after the Contract has been signed by all parties. The purpose of this meeting is to introduce the City's Representatives to their counterparts in the Contractor's organization and to establish lines of communication between the representatives and outline some of the contract requirements. The Contractor's superintendent**,** and quality control representative(s) shall attend this meeting.
   1. The Project Manager will distribute a notice of this meeting, along with an agenda of the subjects to be addressed.
   2. The Project Manager will explain and discuss the responsibilities and authorities of the City, the Designer, and the Project Manager's organization.
   3. The Project Manager will provide highlights of the following information at this meeting:
      a. Minority Business Enterprise (MBE) and Women Business Enterprise (WBE) requirements.
      b. Insurance, laws, codes, traffic regulations, and permit requirements of public agencies and their regulations.
      c. Procedures for processing change orders.
      d. Procedures for submitting shop and working drawings, product data and samples.
      e. Monthly pay estimate cutoff dates.
      f. Payment procedures.
      g. Request for information procedures.
      h. Communication procedures.
      i. Contractor-required Daily Reports.

j. Scheduling and coordination requirements.
k. Quality Control/Quality Assurance procedures.
l. Environmental requirements and permits.
m. Milestones for Substantial Completion and Final Acceptance.
n. Record documents.
o. Project closeout requirements.

B. The Contractor will introduce the Contractor's representatives and briefly describe each person's responsibilities. The Contractor shall provide the following:
1. A list of all subcontractors.
2. Office, storage areas, and construction area layouts, along with temporary easements.
3. Safety, first aid, emergency and security procedures, including the name and contact information for the Contractor's insurance company.
4. 60 day preliminary schedule.
5. Sequence of Work.
6. Construction methods, general worksite layout, and haul plan.
7. Housekeeping procedures.
8. The Contractor's general erosion and sedimentation control plans, noise, hazardous material, air and water pollution control plans, and Quality Control Plan.
9. Coordination and notification requirements for utility work.
10. Deliveries and priorities of major equipment.
11. Submittal schedule.

C. Explanations provided by the City will not amend, supersede, or alter the terms or meaning of any contract document, and the Contractor shall not claim reliance on such explanations as a defense to any breach or failure by the Contractor to perform as specified in the contract.

3.2 CONSTRUCTION PROGRESS MEETINGS

A. Progress meetings will be scheduled weekly or more often as necessary by the Project Manager to promote the competent and timely execution of the contract.

B. The meetings will be held at the worksite or at a location selected by the Project Manager. Meetings will be chaired by the Contractor.

C. The Contractor's personnel, as listed in Paragraph 3.1.A, above, shall attend unless otherwise agreed by the Project Manager.

D. The Contractor's Project Manager will be responsible for publishing minutes of the meetings.

E. At a minimum, the following items will be addressed at each meeting. The items addressed in the meeting do not waive notification or submittal requirements as required elsewhere in the contract.
1. Safety: Contractor shall report any safety issues.
2. Quality Control:
a. The Contractor's Quality Control Representative shall present and discuss the Independent Testing Agency weekly test report and/or testing schedule.
b. The Contractor's Quality Control representative shall report on inspections by other agencies and any follow-up activity required.
c. The Project Manager shall present and discuss issues regarding quality control.

3. Quality Assurance: The Project Manager shall present and discuss issues regarding quality assurance.
4. Design Activities: Open discussion.
5. Shop Drawings / Submittals / Material Procurement:
    a. The Contractor shall provide and review the submittal schedule and provide any updated information and/or changes to the schedule.
    b. The Contractor shall provide information on the status of submittals requiring re-submittal.
    c. The Contractor shall review any accepted submittals that the Contractor plans to re-submit with changes.
    d. Contractor shall provide the status of material procurement for long-lead items (long-lead items are materials and equipment that have a fabrication and/or delivery duration that exceeds 15 working days).
        1) This information shall be provided by the Contractor in a format satisfactory to the City Project Manager and shall include, at a minimum:
            a) Submittal/shop drawing preparation duration.
            b) Review duration.
            c) Fabrication duration.
            d) Delivery duration.

        2) All long-lead items shall be identified with a separate activity on the approved CPM project schedule.

6. Construction Activities: Open discussion to include coordination items with other Contractors and / or agencies.
7. Schedule:
    a. The Contractor shall provide to the Project Manager the Contractor's three week look-ahead schedule and review at the meeting the items on the schedule. The schedule shall be in bar chart format based on the approved CPM, and shall include dates of testing activities, items in progress, percentage of completion of items, responsible subcontractor for the items.

PART 4 - MEASUREMENT AND PAYMENT

4.1 MEASUREMENT

A. No separate measurement shall be made for work under this Section.

4.2 PAYMENT

A. No separate payment will be made for work under this Section. The cost of the work described in this Section shall be included in the Contract price.

END OF SECTION 01 31 19

SECTION 01 32 13 SCHEDULE

PART 1 - GENERAL

1.1 RELATED DOCUMENTS

A. Contract Drawings and general provisions of the Contract, including General and Supplementary Conditions and Division 01 Specification Sections, apply to this Section.

1.2 SUMMARY

A. This Section includes the requirements for the preparation of a preliminary schedule, construction schedule, related narratives, and monthly progress reports, all encompassing complete performance of contract requirements.

B. The Contractor shall schedule and coordinate the work of all of its subcontractors and suppliers including their use of the worksite. The Contractor shall keep the subcontractors and suppliers informed of the project construction schedule to enable the subcontractors and suppliers to plan and perform their work properly.

C. The Contractor shall, in accordance with the requirements of the technical specifications, submit a construction schedule that shall provide for the expeditious and practicable execution of the Work.

D. The construction schedule for the performance of the Work shall be a Critical Path Method (CPM) system in bar chart format, unless an alternate system is specifically identified in the technical specifications.

E. Float or slack is defined as the amount of time between the early start date and the late start date or the early finish date and the late finish date of any activities in the schedule. Float or slack is not time for the exclusive use or benefit of either the Contractor or the City.

F. At a minimum, the Contractor shall submit a monthly progress report and schedule update in accordance with the scheduling provisions or as directed by the Project Manager.

G. The Contractor shall complete the Work within the contract time and in accordance with the most recent schedule submittal that has been approved in writing by the Project Manager.

H. Reference the General Conditions as listed:
1. Article 306 “Working Hours and Schedule”.
2. Article 603 “Delay Damages”.
3. Article 909 “Additional Withholding of Progress Payments”.
4. Article 1103 “Contractor Change Request”.
5. Article 1202 “Submittal of Claims”.

1.3 PLANNING

A. The schedule shall show total contract time, including project milestones, as indicated in the Special Conditions or elsewhere in the contract documents.

B. The Contractor shall prepare a work plan to complete the work within the contract time and complete those portions of work relating to each milestone date and other contract requirements.
   1. The Contractor shall generate a computerized Critical Path Method (CPM) schedule in the Precedence Diagram Method (PDM) format for the Work.
   2. The computerized format shall be compatible with the City's Primavera system, version 3.1 or Microsoft Office Project Professional 2003 or later.
   3. The Schedule shall be submitted electronically to the Project Manager in a dynamic format which will allow review and manipulation of any part of the schedule, and in reproducible hard copy.
   4. The schedule activities shall be resource loaded showing labor man hours by crafts, major construction equipment by type and value of the work.
   5. The value of the work shall summarize each pay item shown in the Schedule of Values and balance to their amount.

C. In addition to the construction activities, the schedule shall include activities for furnishing materials and equipment and vendor shop drawing preparation.
   1. The construction schedule, a supporting narrative, and the overall progress curve shall be submitted for approval within thirty (30) days after Notice to Proceed.
   2. Within thirty (30) days the City will respond with approval or direction to revise and resubmit within ten days.
   3. Failure of the Contractor to have a construction schedule approved by the City will be considered cause for withholding progress payment(s).

D. To the extent that the construction schedule or any revisions thereof contains anything not jointly agreed upon in writing, or fails to show anything jointly agreed upon in writing, it shall not be considered to have the approval of the City.
   1. Failure to include any work item required for performance of this contract shall not excuse the Contractor from completing all work within applicable completion dates, regardless of the City's approval of the schedule.

E. Failure of the Contractor to comply with this Section will be considered cause for withholding progress payment(s) or termination for default.

1.4 SUBMITTALS

A. Refer to Division 01 Section "Submittals" for submittal procedures. Submit the following in digital format:
   1. Preliminary schedule (with narrative).
   2. Construction schedule data and work plan (with narrative).
   3. Monthly progress report.
   4. Construction schedule change request (as needed).
   5. Record construction schedule.

PART 2 - PRODUCTS

2.1 PLOT AND REPORT FORMAT

A. All sheet sizes shall be either 24 x 36-inches or 36 x 48-inches. They shall contain a title block with a minimum eighteen (18) point font showing:
   1. Contractor's name.

2. Contract number and title.
3. Plot date.
4. Data date.
5. Symbol definitions.
6. List of all approved changes to the original approved schedule.

B. Plots shall contain a time line at the top.

PART 3 - EXECUTION

3.1 PRELIMINARY SCHEDULE

A. The Contractor shall prepare a preliminary schedule covering the first ninety (90) calendar days of the contract. This preliminary schedule shall be submitted at the Preconstruction Meeting and shall be accompanied by a narrative description of the work plan. Within fourteen (14) days, the City will respond with acceptance or direction to revise and resubmit within ten days.

B. The preliminary schedule shall show all significant work tasks that occur in the first ninety (90) days, including planning, mobilization, shop submittals and approvals, procurement, fabrication and construction. It shall identify work items or milestones that affect or are affected by the City, other Contractor's work, utilities and other third parties, and it shall list major data submittals required by the contract.

C. The preliminary schedule shall be accompanied by a narrative describing the Contractor's approach to mobilization, procurement and construction during the first 90 days. The narrative shall elaborate on the basis of duration, production rates, major equipment to be used, and shall identify all major assumptions used to develop the schedule.

3.2 CONSTRUCTION SCHEDULE

A. The construction schedule shall include:
1. Work items identified in a Work Breakdown Structure (WBS) format that corresponds with the technical specifications.
2. The order, sequence and interdependence of all significant work items including construction, procurement, fabrication, testing, startup and inspection and delivery of critical or special materials and equipment, submittals and approvals of critical samples, shop drawings, procedures, or other documents that could have a schedule impact.
3. Work items by the City, other Contractors, utilities and other third parties that may affect or be affected by Contractor's activities.
4. Proper referencing of all work items to identify applicable subcontractors or other performing parties.
5. Work items shall be resource loaded to show the direct man-hours estimated to perform the work including work by subcontractors.
6. Include estimated quantities and production rates, hours per shift, work days per week, and types, number and capacities of major construction equipment to be used and whether the Contractor plans to work weekends or holidays.

B. The construction schedule shall be prepared to include the data for the total contract duration, and the critical path shall be identified, including critical paths for interim completion dates. Scheduled start or completion dates imposed on the schedule by the Contractor shall be

consistent with contract milestone dates. Milestone events shall be the schedule dates specified in the Special Conditions and shall be prominently identified and connected to the appropriate work item, denoting its start or completion. Work items related to any interim milestones shall be coded for that milestone.

C. The Contractor shall submit the following documents to the City upon completion of preparation of the construction schedule:
   1. A time phased plot of the CPM schedule in PDM format showing all logic ties and an electronic copy in dynamic format.
   2. Various computer generated construction schedule reports that contain the following data for each work item: Identification, description, responsibility, duration, early start and early finish, late start and late finish, total float, and resources. The work items shall be sorted by float, early start, subcontractor or other sorts mutually agreed to. The reports shall also show the logic ties of successor and predecessor work items.
   3. A physical progress curve showing either manpower or other appropriate key contract items derived from the construction schedule and against which physical progress performance will be measured for schedule and payment purposes.
   4. The narrative described in paragraph 3.2.A.7, above.

3.3 PROGRESS REPORTING

A. The Contractor shall submit a monthly progress report at the end of each month following the Notice to Proceed. At the end of each month, the Contractor and Project Manager shall agree on the progress of the work and the Contractor shall update the construction schedule accordingly. The updated construction schedule is a prerequisite to the submittal of the Contractor's application for progress payment. The schedule shall be made in accordance with Article 3.2, above. This review does not constitute an approval of the construction schedule and shall not be used for the purposes of modifying the initially approved construction schedule.

B. The Contractor shall submit the monthly progress report consisting of a written narrative and various construction schedule reports. This report will be reviewed in a meeting between the Contractor and Project Manager.
   1. The narrative report shall describe overall progress of the work, provide a critical path analysis, discuss significant problems with proposed corrective action, and show the status of major changes and any other changes in sequence of the Work.
   2. The construction schedule reports shall include tabular reports showing the status of resources for completed and in progress work items and for work items scheduled to start in the next thirty (30) days. The report shall include all the information outlined in paragraph 3.2.C.2, above.
   3. A bar chart format schedule shall be provided showing the Contractor's completion status (progress) on each work item along with plots described in paragraph 3.2.C.1, above.
   4. The physical progress curve shall be updated to show actual progress.

C. The latest completion time for any work item does not fall within the time allowed by the construction schedule, the sequence of work and/or duration shall be revised by the Contractor through concurrent operations, additional manpower, additional shifts or overtime, additional equipment or alternative construction methods until the schedule produced indicates that all significant contract completion dates, occupancy dates and milestones will be met. No additional costs will be allowed if such expediting measures are necessary to meet the agreed completion date or dates except as provided elsewhere in the contract documents.

3.4 SCHEDULE CHANGES

A. The Contractor's request for construction schedule changes shall be made on the latest approved construction schedule and shall be accompanied by a narrative description and justification for the change, and shall be submitted in accordance with the General Conditions Article 1105 "Time Extensions" on changes in time. Minor revisions submitted at monthly progress review meetings are not considered as changes in this context.

B. The construction schedule may be changed when one or more of the following occur:
   1. When a change order significantly affects the contract completion date or sequence of work items.
   2. When the Contractor elects to change the sequence or duration of work items affecting the critical path.
   3. When the City directs a change that affects a milestone date(s) specified in the Special Conditions or alters the length of a critical path.

C. If, after submitting a request for change to the construction schedule, the Project Manager does not agree with the request, the Project Manager will schedule a meeting with the Contractor to discuss the differences. If a settlement cannot be reached on the change in the construction schedule or if the Contractor has failed to submit revisions to the network, the Project Manager has the option of providing suggested logic and/or duration times in all subsequent updating reports. The suggested logic and/or duration times will remain in effect until the change in the construction schedule is settled or until the logic and duration are superseded.
   1. If the Contractor has any objections to the data furnished by the Project Manager, he shall advise the Project Manager within ten days in writing, fully supporting the objections with a counter plan. The revisions suggested by the Project Manager shall be used for updating reports until the Project Manager approves the counter plan.
   2. If the Contractor does not submit a counter plan and data within ten days after the date of the Project Manager's suggested logic, the Contractor is deemed to concur with the Project Manager's suggested logic/duration time changes. The Project Manager's plan will be the basis of negotiations for any adjustment of the time and cost for performance of the Work.

3.5 CONTRACT EXTENSIONS

A. If the Contractor is granted an extension of time for completion of any milestone or contract completion date under the provisions of the contract, the determination of the total number of extended days will be based upon the current analysis of the schedule and upon all data relevant to the extension. Such data shall be incorporated in the next monthly update of the schedule.

B. The Contractor acknowledges and agrees that delays in work items which, according to schedule analysis do not affect any milestone dates or contract completion date shown on the CPM network at the time of the delay will not be the basis for a contract extension.

C. Weather Delays: Impacts to the project schedule related to abnormal weather conditions will be based on General Conditions Section 1105.3.

3.6 RECORD CONSTRUCTION SCHEDULE

A. After all contract work items are complete, the Contractor shall submit an Record Construction Schedule showing actual start and finish dates for all work items and milestones.

PART 4 - MEASUREMENT AND PAYMENT

4.1 MEASUREMENT

A. No separate measurement shall be made for work under this Section.

4.2 PAYMENT

A. No separate payment will be made for work under this Section. The cost of the work described in this Section shall be included in the Contract price.

END OF SECTION 01 32 13

SECTION 01 32 19 SUBMITTALS

PART 1 - GENERAL

1.1 RELATED DOCUMENTS

A. Contract Drawings and general provisions of the Contract, including General and Supplementary Conditions and Division 01 Specification Sections, apply to this Section.

1.2 SUMMARY

A. This Section summarizes the requirements for the submittal of documents to the City that are defined in these Specifications. It also describes the procedures for "supplemental" submittals.

B. Reference the General Conditions as listed:
1. Article 309 "Contractor Submittals and other Written Communications to the City".
2. Article 405 "Shop Drawings, Product Data, and Samples".

PART 2 - PRODUCTS

2.1 SUBMITTAL SCHEDULE

A. The Contractor shall provide a submittal schedule within fourteen (14) days after Notice to Proceed. The Submittal Schedule shall be directly related to the CPM schedule, shall identify all the submittals, and shall include the following information for each submittal item:
1. Specification section, contract article, or special condition.
2. Specification Subparagraph.
3. Item description.
4. Date the submittal shall be submitted.
5. Name of subcontractor or supplier.

B. The submittal schedule shall be updated every two weeks by the Contractor and submitted with the progress payment request.

C. One digital submittal submitted on a single CD, USB Drive or by Email.

2.2 ELECTRONIC SUBMITTALS

A. All submittals shall be delivered to the Project Manger in digital format.
1. Acceptable electronic formats:
a. Adobe Acrobat 8.0 or newer. All files shall be fully compatible with Adobe Acrobat 8.0. File shall have no security and bookmark every applicable submittal.

2. Formats are acceptable only with written permission of the Project Manager or required by individual spec sections:
a. Microsoft Office 2003 (2007 preferred) or newer. All files shall be fully compatible with Microsoft Office 2003.
b. AutoDesk AutoCAD 2007 or newer. All files shall be fully compatible with AutoDesk AutoCAD 2007.

1) AutoCAD files shall include any related x-ref files, plot files and pen settings.

c. Other files pre-approved by the Project Manager.

3. Electronic file names: Each electronic document shall have a unique file name. File name convention shall be as follows unless otherwise agreed to by Project Manager: AAA-BBBBBB-CCC-RZ:
   a. AAA = sequential submittal number starting at 001.
   b. BBBBBB = specification section containing submittal requirements.
   c. CCC = sequential specification submittal number starting at 001.
   d. RZ = sequential revision number. RZ not required on initial submittals.
   e. Example A: 005-012973-002", five submittals have been logged overall with two submittals made to Division 01 Section "Schedule of Values".
   f. Example B: 009-012973-002-R3, nine submittals made overall and three revisions to submittal 012973-002.

2.3 INITIAL SUBMITTAL

A. Each submittal document shall include a title block showing the following information:
   1. Date of submittal and revision dates.
   2. Contract title and number.
   3. The names of Contractor, subcontractor, supplier, manufacturer and when applicable, the seal and signature of an engineer registered in the State of Colorado, for the involved discipline.
   4. Identification of product by either: description, model number, style number or lot number.
   5. Subject identification by contract drawing or specification reference.

B. On each submitted drawing, include a blank space on each sheet, three inches by four inches, in the lower right corner, just above the title block, in which the Project Manager may indicate the action taken.

C. Make submissions sufficiently in advance so that the Project Manager review may be completed before any material procurement or Work represented by those submittals is scheduled to be performed.

D. Allow a minimum cycle of ten (10) working days for review of each submittal by the City.

E. The Contractor shall at the time of submission describe variations from the contract documents in writing, separate from the submittal document. If the Project Manager approves any such variations, an appropriate contract change order shall be issued except that, if the variation is minor and does not involve a change in price or in time of performance, a modification need not be issued. If a submission contains variations and the variation column is not marked on the transmittal form, it will not be considered for review and acceptance. Along with marking the transmittal as a variation, a description must be included which outlines all the differences including maintenance and utility services along with any cost savings from an item not containing the variation.

F. Changes in accepted submittal documents will not be permitted unless those changes have been accepted, in writing, by the City.

G. The form and quality of submittal documents shall comply with Article 2.2, above.

2.4 SUPPLEMENTAL SUBMITTALS

A. Supplemental submittal documents initiated by the Contractor for consideration of corrective procedures shall contain sufficient data for review. Make supplemental submittals in the same manner as initial submittals with the appropriate primary transmittal referenced.

PART 3 - EXECUTION

3.1 CONTRACTOR'S REVIEW

A. The Contractor shall review submittal documents, stamp and sign as reviewed and approved as complying with contract documents prior to submission to the City.

3.2 CITY REVIEW

A. Submittal documents will be reviewed by the Project Manager for conformance to requirements of the contract drawings and specifications. Review of a separate item will not constitute review of an assembly in which the item functions. The Project Manager will withhold approval of submittals that depend on other submittals not yet submitted. Review and acceptance will not relieve the Contractor from his responsibility for accuracy of submittals, for conformity of submittal document to requirements of contract drawings and specifications, for compatibility of described product with contiguous products and the rest of the system, or for protection and completion of the contract in accordance with the contract drawings and specifications.

B. The Project Manager will review the submittal documents for general conformance with the contract documents and mark the Action Code, sign and date the transmittal.

C. The Action Codes have the following meanings:
1. A - NO EXCEPTIONS TAKEN: no corrections or resubmissions required; fabrication may proceed.
2. B - MAKE CORRECTIONS NOTED: If Contractor complies with noted corrections, fabrication may proceed and resubmission is not required. If for any reason the Contractor cannot comply with the noted corrections, fabrication shall not proceed and Contractor shall resubmit for additional review and comment.
3. C - REVISE AND RESUBMIT means that the submittal is unacceptable and must be revised and resubmitted. Fabrication shall not proceed.
4. E - NOT ACCEPTED Submittal is not in compliance with the Contract Documents, and is not acceptable. Resubmit Contract compliant material.

3.3 CONTRACTOR'S RESPONSIBILITIES

A. Coordinate each submittal document with the requirements of the Work; place particular emphasis upon ensuring that each submittal of one trade is compatible with other submittals of that trade and submittals of other trades including producing as needed drawings showing the relationship of the work of different trades.

B. Contractor's responsibility for errors and omissions in submittal documents and associated calculations is not relieved by the City's review, correction and acceptance of submittals.

C. Contractor's liability to the City, in case of variations in the submittal document from the requirements of the contract documents, is not relieved by the City's review and acceptance of submittals containing variations unless the City expressly approves the deviation in writing, in which the City describes the variation.

D. The Contractor shall maintain a file of all approved submittal documents at the worksite. The complete file of approved submittal documents shall be turned over to the City with the Record Documents at the end of the job.

E. Schedule impact due to resubmittal requirements is the responsibility of the Contractor.

PART 4 - MEASUREMENT AND PAYMENT

4.1 MEASUREMENT

A. No separate measurement shall be made for work under this Section.

4.2 PAYMENT

A. No separate payment will be made for work under this Section. The cost of the work described in this Section shall be included in the Contract price.

END OF SECTION 01 32 19

SECTION 01 33 23 SHOP AND WORKING DRAWINGS, PRODUCT DATA, AND SAMPLES

PART 1 - GENERAL

1.1 RELATED DOCUMENTS

A. Contract Drawings and general provisions of the Contract, including General and Supplementary Conditions and Division 01 Specification Sections, apply to this Section.

1.2 SUMMARY

A. This Section includes requirements for preparing and submitting shop and working drawings, product data, samples, and record documents required by other specifications sections.
   1. The Contractor shall submit all shop and working drawings, product data and samples, as defined in the General Conditions, to the Project Manager in accordance with the requirements in the specifications. The Project Manager will return one copy of the shop and working drawings, and product data to the Contractor with a written transmittal within the time periods noted in the specifications.

B. Reference the General Conditions as listed:
   1. Article 111 “Final Completion”.
   2. Article 117 “Shop Drawings”.
   3. Article 405 “Shop Drawings, Product Data, and Samples”.

1.3 SUBMITTALS

A. Refer to Division 01 Section “Submittals” for submittal procedures.

B. All submittals shall be delivered to the Project Manager in digital format. All submittals must be of a consistent format (all Acrobat or all Word, etc). No combination of digital file types will be allowed unless required by a specific specification section.
   1. Acceptable digital formats:
      a. Adobe Acrobat 8.0 or newer. All files shall be fully compatible with Adobe Acrobat 8.0.
      b. Formats are acceptable only with written permission of the Project Manager or required by individual spec sections:
         1) Microsoft Office 2003 (2007 preferred) or newer. All files shall be fully compatible with Microsoft Office 2003.
         2) AutoDesk AutoCAD 2007 or newer. All files shall be fully compatible with AutoDesk AutoCAD 2007.
            a) AutoCAD files shall include any related x-ref files, plot files and pen settings.

         3) Other files pre-approved by the Project Manager.

   2. Adobe Acrobat Requirements:
      a. Drawings shall have security set to “No Security”. Commenting, printing, adding photos, filling in form fields, and document signing must be allowed.
      b. PDF submittals shall be one continuous file. No external links are allowed.
      c. All individual components of submittals shall be bookmarked inside the PDF file.

d. All original documents shall be directly converted from the original digital format to PDF. Scanning of files shall only be allowed by the Project Manager when the original digital information is not obtainable.
e. Failure to comply with these requirements will result in a return of file to the Contractor for immediate revision.

3. Digital file names: Each digital document shall have a unique file name. File name convention shall be as follows unless otherwise agreed to by Project Manager: AAA-BBBBBB-CCC-RZ.
   a. AAA = sequential submittal number starting at 001.
   b. BBBBBB = specification section containing submittal requirements.
   c. CCC = sequential specification submittal number starting at 001.
   d. RZ = sequential revision number. RZ not required on initial submittals.
   e. Example A: 005-012973-002", five submittals have been logged overall with two submittals made to Division 01 Section "Schedule of Values".
   f. Example B: 009-012973-002-R3, nine submittals made overall and three revisions to submittal 012973-002.

C. Quantities:
1. Post digital submittals as PDF digital files directly to the Project Manager, Contractors FTP site, a site specifically established for the Project, or in a digital delivery method agreed to by the Project Manager.
   a. The Contractor should send an email for each submittal posted to all parties notifying them the submittal is available for review.
   b. The Project Manager will send an email to the Contractor when the submittal review is complete.

2. Contractor can submit digital submittals via email as PDF digital files if approved by the Project Manager.
3. Samples: Submit four (4) samples of each item specified in the various specification sections, unless otherwise specified.
4. Note: If manufacturer's printed information is in color, all copies of submittals must be in color.
   a. Printed information is only allowed when digital copies are not possible.

D. Review:
1. Submittal review comments by the Project Manager will be in digital form and incorporated into the digital submittal file.
2. Comments from Project Manager will be formatted as described in Division 1 Section "Submittals".
3. Resubmittals of digital documents shall modify the original digital file with new information and include the Project Manager's comments with appropriate responses and additional information.

1.4 CHANGES

A. Changes in products for which shop or working drawings, product data or samples have been submitted will not be permitted unless those changes have been accepted and approved in writing by the City.

PART 2 - PRODUCTS

2.1 SHOP AND WORKING DRAWINGS

A. Include the following as they apply to the subject:
   1. Contract title, work order and number.
   2. Respective contract drawing numbers.
   3. Applicable specification section numbers.
   4. Relation to adjacent structure or materials.
   5. Field dimensions clearly identified as such.
   6. Applicable standards such as ASTM or Federal Specification number, and pertinent authority specifications or standards.
   7. Identification of deviations from the Contract drawings and specifications.
   8. Drawing name, number, and revision.
   9. Contractor's stamp, initialed or signed, certifying:
      a. Verification of field measurements.
      b. Review of submittals for compliance with contract requirements.
      c. Compatibility of the Work shown thereon with that of affected trades.

   10. Blank space on each sheet per Division 01 Section "Submittals", paragraph 2.3.B.

B. Drawings of equipment and other items that contain multiple parts shall include exploded views showing the relationship of parts and the description of the parts into the smallest units that may be purchased or serviced.

2.2 PRODUCT DATA

A. Modify manufacturer's standard and/or schematic drawings to delete information which is not applicable to the contract. Supplement standard information with additional information applicable to this contract.

B. Modify manufacturer's standard(s), diagrams, schedules, performance charts, illustrations, calculations and other descriptive data to delete information which is not applicable to the contract. Indicate dimensions, clearances, performance characteristics and capacities. Include with the submittal electrical, plumbing, HVAC and any other diagrams, as applicable.

C. Modify erection, application and placing instructions to delete information that is not applicable to the contract or work order.

D. Include the following:
   1. Contract title, work order and number.
   2. Respective contract drawing numbers.
   3. Applicable contract technical specification section numbers.
   4. Applicable standards such as ASTM or Federal Specification number, and pertinent authority specification or standards.
   5. Identification of deviations from the Contract drawings and specifications.
   6. Contractor's stamp, initialed or signed, certifying:
      a. Dimensional compatibility of the product with the space in which it is intended to be used.
      b. Review of submittals for compliance with contract requirements.

c. Compatibility of the product with other products with which it is to perform or which will be next to it.
d. The products electrical, plumbing, control and HVAC requirements conform to contract documents and the necessary utilities are provided for in the contract documents.

E. Certificates of compliance shall be submitted for all products. The certificates shall:
1. State that the product complies with the respective specification and contract drawing requirements.
2. Be accompanied by a certified copy of test results pertaining to the product
3. Show the submittals date, Contractor's name and address, contract title and number, product represented and its location in the contract, producer's name, product trade name and catalog number, place of product origin, test date, testing organization's name and address, quantity of the product to be furnished and related contract drawing and specification section numbers.
4. Be signed by an officer or another authorized representative of the producer and notarized.
5. Submit one digital copy.
6. Be received by the City not later than thirty (30) days before the acceptance is needed of the products for ordering.

2.3 SAMPLES

A. Submit samples of sizes and quantities to clearly illustrate full color range and functional characteristics of products and materials including attachment devices.

B. Erect field samples and mock ups at the worksite as specified in the several technical specifications sections and at locations acceptable to the Project Manager. All field samples shall be erected in a location that will be readily visible throughout the life of the contract to allow comparison of the work as it progresses to the field sample.

C. The Contractor shall verify, through appropriate inspections and tests, that the samples submitted meet the specifications and shall provide inspection and test data with the samples. The review and comments on the sample shall not relieve the Contractor of his responsibility for completion of the contract.

D. Show the following information:
1. Contract title and number.
2. Respective contract drawing numbers.
3. Applicable technical specification section numbers.
4. Applicable standards such as ASTM or Federal Specification number.
5. Identification of deviations from the Contract drawings and specifications.
6. Contractor's stamp, initialed or signed, certifying:
a. Dimensional compatibility of the product with the space in which it is intended to be used.
b. Review of submittals for compliance with contract requirements.
c. Compatibility of the product with other products with which it is to perform or which will be next to it.

7. If multiple samples are submitted and the Project Manager is requested to make a choice, each sample shall have a unique identification number attached to it so the returned

transmittal can state the identification number of the accepted sample and the Contractor will know which one it is.

PART 3 - EXECUTION

3.1 CONTRACTOR RESPONSIBILITIES

A. Verify field measurements, catalog numbers and similar data.

B. The Contractor shall not start work for which submittals are required until a transmittal has been received by the Contractor showing acceptance or acceptance as noted by the Project Manager.

C. Before making submittals ensure that products will be available in the quantities and at the times required by the contract.

D. Submit final, corrected, digital drawings of contract and shop and working drawings showing the Work as actually installed, placed, erected and applied. Refer to Division 01 Section "Contract Closeout".

3.2 REVIEW BY THE CITY

A. One digital copy of the marked-up shop and working drawing and one digital copy of the product data will be returned to the Contractor by the Project Manager. Only the transmittal form, appropriately marked, and two samples will be returned on sample submittals. Contractor shall maintain one approved sample on site for the duration of the project.

B. Contractor's responsibility for errors and omissions in submittals for compatibility will not be reduced, waived or otherwise limited by the review and acceptance of submittals by the City.

PART 4 - MEASUREMENT AND PAYMENT

4.1 MEASUREMENT

A. No separate measurement shall be made for work under this Section.

4.2 PAYMENT

A. No separate payment will be made for work under this Section. The cost of the work described in this Section shall be included in the Contract price.

END OF SECTION 01 33 23

SECTION 01 35 23 CONSTRUCTION SAFETY

PART 1 - GENERAL

1.1 RELATED DOCUMENTS

A. Contract Drawings and general provisions of the Contract, including General and Supplementary Conditions and Division 01 Specification Sections, apply to this Section.

1.2 SUMMARY

A. This Section includes requirements for construction safety precautions and programs by the Contractor and the basis for reviews by the Project Manager.

B. Reference the General Conditions as listed:
1. Article 801 “Safety of Persons”.
2. Article 802 “Protective Devices and Safety Precautions”.
3. Article 803 “Protection of Property and Work in Progress”.

1.3 RESPONSIBILITY

A. The General Conditions make it clear that all safety precautions during the construction process are the responsibility of the Contractor. The Contractor is responsible for the health and safety of his employees, agents, subcontractors and their employees, and other persons on the worksite; for the protection and preservation of the work and all materials and equipment to be incorporated therein; and for the worksite and the area surrounding the worksite. The Contractor shall take all necessary and reasonable precautions and actions to protect all such persons and property.

B. This Section shall be interpreted in its broadest sense for the protection of persons and property by the Contractor and no action or omission by the Project Manager or his authorized representatives shall relieve the Contractor of any of its obligations and duties hereunder.

1.4 SUBMITTAL

A. Refer to Division 01 Sections “Submittals” and “Shop and Working Drawings, Product Data, and Samples” for the process. A safety plan shall be submitted by the General Contractor prior to commencing any work.

1.5 PROJECT MANAGER’S REVIEW

A. The Contractor shall provide two (2) copies of its safety program to the Project Manager for review at least ten days before on-site construction begins. The Contractor’s program must meet as a minimum all applicable federal, state and local government requirements.
1. The Contractor must, as part of the Contractor’s safety program, submit one electronic file in the form of a security-free, fully bookmarked PDF file compatible with Adobe Acrobat 8.0 or newer and one body hard copy of the following information for acceptance by the Project Manager prior to construction:
a. Name of the Contractor’s site safety representative.

b. If the Contractor is running multiple shifts or working more than forty (40) hours per week, the name of an assistant Contractor's safety representative who can act in the absence of the site safety representative.
c. Twenty four (24) hours per day emergency phone numbers of Contractor site management to be used in case of injury or accident. Provide at least four contacts.
d. The Contractor's method of ditching and trenching excavation to be used, including how slopes will be stabilized with calculations showing the slope stability.
    1) The Contractor shall also show how material will be stored beside the excavation.
    2) Stored material will include the excavated and backfilled material.
e. How injuries or accidents will be handled including samples of the forms used to report injuries or accidents.
f. How employees will be handled who are unable to safely perform their duties, including how the Contractor will determine whether an employee is unable to safely perform his duties.
g. How and when equipment will be checked to see that it is safe, that all safety guards are in place and that the equipment is being used for its designed purpose and within its rated capacity.
h. How and when all electric devices will be checked for proper grounding and insulation. What system will be used to lock out electric systems that should not be energized.
i. How trash and human organic waste will be disposed.
j. How snow and ice will be removed within the project area by the Contractor.
k. How concrete forms will be anchored to ensure their stability, including calculations showing that the forms will safely hold the maximum construction loads.
l. How flammable materials will be stored and handled, and how any spills will be cleaned up and removed for disposal.
m. What system will be used to prevent fires, and if fires do occur who will be trained to fight them. Also what firefighting equipment the Contractor will have available and how this equipment's condition will be monitored.
n. How materials will be received, unloaded, stored, moved, and disposed of.
o. How personnel working above ground level will be protected from falling.
p. How people working underneath work will be protected.
q. What will be done to protect personnel in case of severe weather.
r. How adequate lighting will be provided and monitored.
s. How the safety of work platforms, man lifts, material lifts, ladders, shoring, scaffolding, etc. will be ensured relating to load capacity and the protection of personnel using or working around them.

B. Prior to the start of any work by a contractor or subcontractor employee, the Contractor shall provide the Project Manager with a list of its employees, subcontractor's employees, and other personnel the Contractor has requested to work on site, who have signified in writing that they have been briefed on, or have read and understand, the Contractor's Safety Plan.

PART 2 - PRODUCTS

2.1 CONTRACTOR'S SAFETY PLAN

A. Provide a Contractor's Safety Program as described in Division 01 Section "Summary of Work".

PART 3 - EXECUTION

3.1 IMPLEMENT CONTRACTOR'S SAFETY PLAN

A. Implement the approved Contractor's Operational Safety Plan as described in Part 1 of this section.

PART 4 - AND PAYMENT

4.1 MEASUREMENT

A. No separate measurement shall be made for work under this Section.

4.2 PAYMENT

A. No separate payment will be made for work under this Section. The cost of the work described in this Section shall be included in the Contract price.

END OF SECTION 01 35 23

SECTION 01 42 10 REGULATORY REQUIREMENTS

PART 1 - GENERAL

1.1 RELATED DOCUMENTS

A. Contract Drawings and general provisions of the Contract, including General and Supplementary Conditions and Division 01 Specification Sections, apply to this Section.

1.2 SUMMARY

A. This Section identifies primary compliance with the State, and City and County of Denver's regulatory requirements including:
   1. Colorado Department of Transportation (CDOT).
   2. Denver Department of Public Works
      a. The Division of Wastewater Services
      b. Right of Way Services
      c. Construction Engineering
      d. Traffic Engineering
   3. Colorado Department of Health and Environment (CDPHE)

B. Construction shall be based on the latest edition of the referenced codes including additions and revisions thereto that are in effect at the time of project bidding.

1.3 BUILDING CODE

A. All construction work shall be governed by the Building Code for the City and County of Denver, latest edition. This is based upon the International Building Code of the International Code Council with Denver Amendments to this code.

1.4 DENVER BUILDING DEPARTMENT

A. For review and approval of all construction documents for compliance to the Denver Building Code:

City and County of Denver
Community Planning and Development
Building Inspection Division
201 West Colfax Avenue, Dept 205
Denver, Colorado 80202
Telephone 720-865-2720
Fax 720-865-2880

1.5 DENVER FIRE DEPARTMENT

A. For review and approval of plans for compliance with the Denver Fire Department's requirements as they apply to projects for the Department of Public Works:

Denver Fire Department
745 W. Colfax Ave.

Denver, Colorado 80204
Telephone 720-865-2833

B. The Contractor is advised that the Denver Fire Department – Fire Prevention Bureau requires permitting for the following activities as they apply to the scope of work. The Contractor is responsible for obtaining the appropriate permits necessary to complete the work. All costs associated with this permitting and policy compliance shall be the responsibility of the Contractor. The policies all reference the International Fire Code (IFC).
   1. Hot Work: "Hot work" shall be defined as the operation of any equipment or tool that creates sparks, hot slag, or radiant or convective heat as a result of the work. This includes, but is not limited to, welding, cutting, brazing, or soldering.
   2. Use and storage of compressed gas for both temporary storage and permanent facility installation. This includes, but is not limited to, flammable gas (excluding propane-LPG), oxidizer (including oxygen), and inert and/or simple asphyxiates.
   3. Tank installation, which includes above-ground storage tanks (AST) and underground storage tanks (UST) for both temporary tanks and permanent facility installations.

C. In addition to the above permits, the Denver Fire Department may require other permits that are associated with the specific work in the Contract Documents. Policies provided by the Denver Fire Department are meant to provide basic information for the most common conditions and situations. In any given occupancy, many other International Fire Code (IFC) requirements may be enforced. These should be addressed with the Denver Fire Department before construction begins and during construction with premise inspection(s). Any questions can be addressed to the Fire Prevention Bureau between 6:30 A.M. and 9:00 A.M. Monday-Friday at 720-913-8242 or 720-913-8237.

1.6 THE DENVER OFFICE OF DISABILITY (ADA) COMPLIANCE

A. Construction shall be based on the latest edition of the referenced codes including additions and revisions thereto that are in effect at the time of project bidding.

City and County of Denver
Human Rights and Community Partnerships
Office of Disability Rights
201 West Colfax Avenue, Dept 1102
Denver, CO. 80202

*Note: Currently the 2010 ADA standards for accessible design and the Transportation Standards and Details for the Engineering Division, Denver Public Works Department, 7.0-8.1 are being used as reference documents.

PART 2 - PRODUCTS (Not Used)

PART 3 - EXECUTION

3.1 PERMITS AND CERTIFICATIONS

A. The Contractor shall maintain records on site of all permits acquired by federal, state, and local agencies. Posting of permits shall conform to requirements of the respective agencies.

B. At the completion of any inspection by other agencies, the Contractor shall forward copies of the status of the inspection and copies of any approved or “signed-off” inspections by the respective agencies to the Project Manager.

C. At the time of request for Substantial Completion, the Contractor shall forward to the Project Manager all permits approved by the respective agencies.

PART 4 - MEASUREMENT AND PAYMENT

4.1 MEASUREMENT

A. Measurement will be made by the contract unit specified for work under this Section.

4.2 PAYMENT

A. Payment will be made at the contract unit price for work under this Section. The cost of the work described in this Section shall be included in the Contract price.

END OF SECTION 01 42 10

SECTION 01 42 16 DEFINITIONS AND CONVENTIONS

PART 1 - GENERAL

1.1 RELATED DOCUMENTS

A. Contract Drawings and general provisions of the Contract, including General and Supplementary Conditions and Division 01 Specification Sections, apply to this Section.

1.2 SUMMARY

A. This Section contains a list of definitions of words or phrases and grammatical or contextual conventions commonly used in these contract documents.

1.3 DEFINITIONS

A. Alphabetical Listing of Definitions
1. As Indicated: Shown on the drawings by graphic indication, notes or schedules, or written in the specifications or elsewhere in the contract documents.
2. As directed, as approved, or as requested: Unless otherwise indicated, these terms imply "by the Project Manager" and require that an instruction be obtained by the Contractor from the Project Manager.
3. Concealed: Embedded in masonry, concrete or other construction; installed in furred spaces; within double partitions or hung ceilings; in trenches; in crawl spaces or in enclosures.
4. Ensure: To make certain in a way that eliminates the possibility of error.
5. Exposed: Not installed underground or "concealed" as defined above.
6. Furnish or Provide: To supply, install and connect complete and ready for safe and regular operation of particular work unless specifically otherwise noted.
7. As Indicated, As Shown, or As Noted: As depicted on drawings or specifications.
8. Install: To erect, mount and connect complete with related accessories.
9. Or equal, or Approved Equal: Refers to products which, in the opinion of the Project Manager, are similar in all respects to products specified by proprietary brand name.
    a. Refer to Division 01 Section "Substitutions" for procedures for submittal of proposed substitutions.
10. Rework: To repair existing items or work required to be removed and replaced in order to accomplish the Work in accordance with the contract documents.
11. Related Work: Includes, but not necessarily limited to, mentioned work associated with, or affected by, the work specified.
12. Reviewed, Satisfactory, Accepted, or Directed: Assumes by or to the Project Manager.
13. Similar, or Equal: Same in materials, weight, size, design, construction, capacity, performance and efficiency of specified product.
14. Supply: To purchase, procure, acquire and deliver complete with related accessories.
15. Unless Otherwise Indicated and Unless Otherwise Noted: General note to perform work as indicated or shown on drawings or in specifications unless specifically directed otherwise elsewhere in the contract documents; may be abbreviated "U.O.N.", "U.O.I.", or "U.N.O."

1.4 CONVENTIONS

A. Specifications Format: In order to standardize the location of information in the Contract Documents, the specifications generally are organized in the following format:
   1. The 2014 edition of "MASTERFORMAT" published by the Construction Specifications Institute.

B. Organization of Drawings and Specifications: Organization of the specifications into divisions and sections, and arrangement or numbering of drawings is intended solely for the convenience of the Contractor in his responsibilities to divide the Work among subcontractors or to establish the extent of work to be performed by any trade.
   1. Neither the City nor the Project Manager assume any liability arising out of jurisdictional issues or claims advanced by trade organizations or other interested parties based on the arrangement or organization of drawings or specifications.

C. Gender and Number: For convenience and uniformity, parties to the Contract, including the City, Contractor, and Project Manager, and their subcontractors, suppliers, installers, consultants or other interested parties are referred to throughout the contract documents as if masculine in gender and singular in number. Such reference is not intended to limit the meaning of the contract documents to the masculine gender or singular number.

D. Singular vs. Plural: Materials, products, equipment or other items of work referred to in the singular shall be construed as plural where applicable by the intent of the contract documents and shall not limit quantities to be provided by the Contractor.

E. Imperative Mood: Specifications and notes on the Drawings or elsewhere in the contract documents are generally written in the imperative mood as instructions to the Contractor, whether the Contractor is specifically addressed or not.

F. References to Subcontractors or Trades: References to subcontractors, trades, or other entities which are not parties to the contract shall be construed as meaning the Contractor whose responsibility it shall be to divide the Work among subcontractors or trades. Such references are used as a matter of convention, and are not intended to preclude or direct the Contractor's responsibility to divide the Work.

G. Abbreviations: Abbreviations are believed to be those in general use in the construction industry. Contact the Project Manager for clarification of abbreviations for which the meaning is not clear.
   1. Review the contract drawings for additional abbreviations.

PART 2 - PRODUCTS (Not Used)

PART 3 - EXECUTION (Not Used)

PART 4 - MEASUREMENT AND PAYMENT

4.1 MEASUREMENT

A. No separate measurement shall be made for work under this Section.

4.2 PAYMENT

A. No separate payment will be made for work under this Section.

END OF SECTION 01 42 16

SECTION 01 42 23 ADMINISTRATION, PROCEDURES, CODES

PART 1 - GENERAL

1.1 RELATED DOCUMENTS

A. Contract Drawings and general provisions of the Contract, including General and Supplementary Conditions and Division 01 Specification Sections, apply to this Section.

1.2 SUMMARY

A. This Section includes general administrative requirements and procedures, and related applicable codes.

1.3 CODES

A. Obtain all permits and licenses in accordance with General Conditions Article 317 – "Permits and Licenses".

B. Publication Dates: Comply with General Conditions Article 401 – "Contract Documents-Review and Interpretation".

1.4 EXISTING UTILITIES

A. Locate and protect existing utilities in accordance with General Conditions Article 804 – "Protection of Municipal, Public Service, or Public Utility Systems".

B. Although existing utilities may be shown on the drawings, their location is not guaranteed. Contractor is required to call Utility Notification Center of Colorado (UNCC) at 811 three days (72 hours) prior to starting any work.

1.5 CONTRACTOR'S CONSTRUCTION SCHEDULE

A. Furnish construction schedule, as required by General Conditions Article 306 – "Working Hours and Schedule".

B. IMPORTANT: Prior to beginning work on project site, the Contractor shall give minimum 48 hour notification to both the Project Manager and the District Superintendent.

C. The schedule may be used as a tool in analyzing any requests for the extension of the contract completion date due to changes in the Work or abnormal weather conditions. Normal weather conditions are based on the ten-year historical weather information provided by the National Climatic Data Center for the Denver Metropolitan area. Normal weather conditions shall be incorporated into the bar chart schedule. Additional time will be added to the Contract time only if the activities involved will affect the project's Completion Date because of the criticality of the activities changed or altered.

1.6 DELIVERY, STORAGE, AND HANDLING

A. Properly carton, crate, cover, and protect materials, products and equipment for shipping, handling and storing. Use appropriate means for hoisting and loading which will prevent damage or overstress to items being handled or shipped. Store them under roof in controlled environment whenever feasible; otherwise store off the ground under suitable coverings properly secured against wind and weather. Protect all items from rain, snow, moisture, wind, cold, heat, frost, sun, staining, discoloration, deterioration and physical damage from any cause. Refer to individual sections for specific requirements.

PART 2 - PRODUCTS (Not Used)

PART 3 - EXECUTION (Not Used)

PART 4 - MEASUREMENT AND PAYMENT (Not Used)

END OF SECTION 01 42 23

SECTION 01 43 00 QUALITY ASSURANCE

PART 1 - GENERAL

1.1 RELATED DOCUMENTS

A. Contract Drawings and general provisions of the Contract, including General and Supplementary Conditions and Division 01 Specification Sections, apply to this Section.

1.2 SUMMARY

A. Quality Assurance is defined as measures, tests, and/or audits that may be performed by the City or City Representatives to ensure the Contractors work is installed per the construction documents and the contractors Quality Control plan.

B. This Section identifies inspection activities to be performed by inspectors and testing agencies employed by the City and working under the direction of the Project Manager.
   1. Inspection and tests, conducted by persons or agencies other than the Contractor, shall not in any way relieve the Contractor of his responsibility and obligation to meet all specifications and the referenced standards.
   2. The inspection and approval of work by other agencies above does not constitute inspection or acceptance of work required by the City. Technical specifications may contain requirements more stringent than Building Inspection Division or other code agency requirements.

C. Reference General Conditions as listed:
   1. Article 1701 “Construction Inspection by the City”.
   2. Article 1702 “Authority of Inspectors”.
   3. Article 1703 “Observable Defects”.
   4. Article 1704 “Defects – Uncovering Work”.
   5. Article 1705 “Latent Defects”.
   6. Article 1706 “Removal of Defective Materials and Work”.

D. Related Sections:
   1. Division 01 Section “Contractor Quality Control”.
   2. Division 01 Section “Submittals”.
   3. Division 01 Section “Shop and Working Drawings, Product Data, and Samples”.

PART 2 - PRODUCTS (Not Used)

PART 3 - EXECUTION

3.1 CITY’S QUALITY ASSURANCE MEASURES

A. According to the judgment of the Project Manager, any portion of the work in this contract may be tested at any time for any reason.

B. Contractor shall not rely upon these tests to assure compliance with the Contract Documents.

3.2 TESTING – GENERAL

A. Tests: Made by testing laboratory approved by the Project Manager. Except as otherwise provided, sampling and testing of materials and laboratory methods and testing equipment shall be in accordance with latest standards and tentative methods of ASTM.
   1. Specific information concerning testing methods, sample sizes, etc., is included under applicable sections of Specifications.
   2. Any modification of, or elaboration on, these test procedures included for specific materials under their respective sections in Specifications shall take precedence over these procedures.

3.3 COST OF TESTING

A. Unless indicated otherwise, additional testing required by the City's Agents shall be performed by the City's authorized agents, at the City's expense.

B. Costs for testing shall be borne by the Contractor only if such tests indicate that work does not meet Contract Document requirements.

C. Costs for re-testing of non-complying work shall be borne by the Contractor.

3.4 TEST REPORTS

A. Test reports, whether performed for the City or the Contractor, shall be submitted to the Project Manager and Contractor as soon as results are available. Reports shall be clear, concise, comprehensive written forms containing required test results.

B. Reports of tests made by testing laboratories shall be distributed by testing laboratory as follows:
   1. Two (2) Copies – Project Manager.
   2. One (1) Copy – Contractor.
   3. One (1) Copy – Applicable Supplier or Subcontractor.

3.5 MANUFACTURING AND FABRICATION INSPECTIONS

A. The Project Manager may elect to perform additional inspections and/or tests at the place of the manufacturer, the shipping point, or at the destination to verify conformance to applicable specifications. Inspections and tests performed by the City shall not relieve the Contractor from the responsibility to meet the specifications, nor shall such inspections/tests be considered to be a guarantee for acceptance of materials that will be delivered at a later time.

B. The Project Manager or his authorized representative may inspect at its source any material or assembly to be used in the Work. Manufacturing plants may be inspected from time to time for the purpose of determining compliance with specified manufacturing methods or materials to be used in the Work and to obtain samples for testing and further inspection.

C. Should the Project Manager conduct plant inspections the following conditions shall exist:
   1. The Project Manager shall have the cooperation and assistance of the Contractor and the producer with whom the Contractor has contracted for materials.

2. The Project Manager shall have full access during scheduled production or warehousing working hours to parts of the plant that are concerned with the manufacture, production, storage or shipping of materials being furnished.
3. The Contractor shall arrange for adequate office or working space that can reasonably be needed for conducting a plant inspection. Office or working space shall be conveniently located with respect to the plant and/or warehouse as required by the Project Manager.

D. It is understood and agreed that the City shall have the right to re-test, at the City's expense, any materials that have been tested and accepted at the source of supply after it has been delivered to the site.

PART 4 - MEASUREMENT AND PAYMENT

4.1 MEASUREMENT

A. No separate measurement shall be made for work under this Section.

4.2 PAYMENT

A. No separate payment will be made for work under this Section. The cost of the work described in this Section shall be included in the Contract price.

END OF SECTION 01 43 00

SECTION 01 45 16 CONTRACTOR QUALITY CONTROL

PART 1 - GENERAL

1.1 RELATED DOCUMENTS

A. Contract Drawings and general provisions of the Contract, including General and Supplementary Conditions and Division 01 Specification Sections, apply to this Section.

1.2 SUMMARY

A. This Section identifies the Quality Control activities to be performed during all phases of the contract by the Contractor. Quality Control is defined as the process by which the Contractor ensures the project is constructed per the construction documents.

B. The Contractor shall have in place his Quality Control Program as necessary to ensure that all materials and work are completed in compliance with contract documents. The Contractor is solely responsible for Quality Control. The City reserves the right to conduct additional tests or audits to verify compliance per Division 1 section "Quality Assurance".

C. Test schedules and/or testing requirements for materials used on this project are included in the technical specifications. Laboratory and field testing identified in the technical specifications shall be conducted by an Independent Testing Agency (ITA) retained by the Contractor.

1.3 LEVEL OF CONTROL

A. The intent of this section is to enable the Contractor to establish a necessary level of control that will:
   1. Adequately provide for the production of acceptable quality materials.
   2. Provide sufficient information to ensure both the Contractor and the Project Manager that the specification requirements are being met.
   3. Allow the Contractor as much latitude as possible to develop his or her own standards of control.

1.4 SUBMITTALS

A. Refer to Division 01 Sections "Submittals" and "Shop and Working Drawings, Product Data, and Samples", for submittal requirements.

B. Quality Control Plan: Within ten (10) days after Notice to Proceed, the Contractor shall submit a Quality Control Plan for review and acceptance. Acceptance by the Project Manager does not relieve the Contractor of compliance with the contract requirements. The Contractor Quality Control Plan shall address the following as a minimum:
   1. Provide a general description of Quality Control monitoring to be performed until final acceptance by the City. Include monitoring activities of Work and the worksite during times no construction activity is scheduled to take place.
   2. The Contractor shall designate an employee as the Quality Control Representative qualified to perform quality control monitoring of the Work. The designated individual shall have the authority to direct work changes required to bring the Work into

conformance with contract requirements including stopping non-conforming work in progress.

3. The Quality Control Plan shall address each technical specification division's requirements for quality control. The Contractor shall identify each item requiring submittal and approval/acceptance prior to installation of work. Also, the Contractor shall identify each item of work requiring testing by the independent testing agency.
4. The Quality Control Plan shall address and establish controls and documentation format to ensure that items or materials that have been accepted through receiving inspection are used or installed. Identification and traceability shall be provided throughout all inspections, test activities and records. For stored items, provisions shall be made for the control of item/material identification, consistent with the expected duration and type of storage.
5. Provide methodology of monitoring, testing and exercising of all equipment, valves and/or assemblies to ensure the Work installed is in proper working order.

C. List of Suppliers and Subcontractors: Submit a list of suppliers and subcontractors, including items to be supplied by each supplier and/or subcontractor. Identify work to be performed by each subcontractor. The list shall be updated and resubmitted as required.

D. Emergency Contact List: Submit a list of emergency contact information including name, company, title, work phone number, home phone number, and other means of contact for at least four individuals.

1. Review the Emergency Contact list on a daily basis. In the event there is any change in any of the information, the Contractor shall forward the updated list to the Project Manager.
2. The Emergency Contact list shall include the project number, project title, and date of issue.

E. Quality Control Report:

1. The Quality Control Report shall be submitted weekly or per the discretion of the Project Manager in the format detailed in Division 01 Section "Standard Forms". The report shall address as a minimum the following: identify notifications and discussions with/by other agency inspectors, identify work placed that day and any deviations and/or corrections required to bring the Work into conformance with the contract. Reporting must be digital format and signed by the Contractors Quality Control Representative. Legible, hand written reports on the approved form shall be accepted. Scanned copies of daily reports are acceptable.
2. Submit one electronic copy of the Quality Control Report to the Project Manager the week following the work or per the discretion of the Project Manager. The report shall be signed by the Contractor's Quality Control Representative and the Contractor's Superintendent.

F. Corrective Action Report (CAR): Conditions adverse to quality will be reviewed by the Contractor and the City Representative to determine the cause and to recommend a corrective action that will preclude recurrence.

1. The condition, its cause, and the corrective action planned shall be reported to the Project Manager prior to implementation.
2. Follow-up action shall be taken to verify implementation of the corrective action.
3. The Contractor will document the corrective action and a copy of the Corrective Action Report (CAR) will be transmitted to the Project Manager.

1.5 DOCUMENTATION

A. The Contractor shall not change or alter approved submittals, procedures, specifications, drawings, or other pertinent documentation without the Project Manager's written authorization.

B. All records and documents that are quality related shall be prepared, identified, and maintained by the Contractor and shall be made available to the City upon request. Records shall be protected from damage, deterioration or loss. A copy of the records and documents shall be maintained at the Work site at all times unless the Project Manager has approved other locations in writing. .

C. The Contractor shall maintain records at the actual worksite and at Contractor's office to show the inspection status of materials and items installed in order to ensure that the required inspections and tests have been performed in a timely and correct manner.

1.6 INSPECTIONS AND TESTS

A. Inspections, tests, and system shut down requests, conducted by persons or agencies other than the Contractor, shall not in any way relieve the Contractor of his responsibility and obligation to meet all specifications and the referenced standards. The Contractor's designated Quality Control Representative shall inspect the work and shall ensure the work complies with the contract requirements prior to any requests for inspection or testing.

B. When the specifications, laws, ordinances, rules, regulations or orders of any public agency having jurisdiction require the Project Manager's surveillance of inspections or tests, the Contractor shall notify the Project Manager of the place, date and time forty eight (48)-hours prior to the inspection and/or test. The Contractor shall be responsible for notifying and requesting inspection by other agencies including but not limited to the Denver Building Inspection Division, Denver Fire Department, Denver Wastewater Management Division and Denver Water. Prior to request for other agency inspections, the Contractor shall meet and plan inspection times with the Project Manager and or his designated representative.

C. Special inspections or tests may be required by the technical specifications, City, State and/or Federal Agencies in addition to those tests already performed. The Contractor shall notify the Project Manager at least forty eight (48)- hours in advance of the additional inspections or tests.

1.7 INSPECTION PLAN

A. The Contractor shall utilize the following six-point inspection plan to ensure the conformance of the Work performed by the Contractor meets the requirements of the contract drawings and specifications, the referenced codes and standards and the approved submittals:

1. Pre-work Coordination: Prior to the start of construction work, work under each separate specification section, where a change in a construction operation is contemplated by the Contractor, and a new subcontractor starting work, a coordination meeting will be held with the Contractor's superintendent, Quality Control, and Safety representative(s), and the ITA representative. Supervisory, Safety, and Quality Control representatives of all applicable subcontractors shall also attend. The Contractor's Quality Control Representative shall chair the meeting, and prepare and distribute minutes of Quality Control meetings. Meeting minutes shall be electronically distributed within twenty four (24) - hours of the meeting.

2. The purpose of the meeting is to ensure that the Contractor's personnel have no misunderstandings regarding their safety and quality procedures as well as the technical requirements of the contract. The following items shall be presented and reviewed by the Contractor:
    a. Contract requirements and specifications.
    b. Shop drawings, certifications, submittals and Record Drawings.
    c. Testing and inspection program and procedures.
    d. Contractor's Quality Control program.
    e. Familiarity and proficiency of the Contractor's and subcontractor's workforce to perform the operation to required workmanship standards including certifications of installers.
    f. Safety, security, and environmental precautions to be observed.
    g. Any other preparatory steps dependent upon the particular operation.
    h. The Contractor's means and methods for performing the Work.

3. Initial Inspection: Upon completion of a representative sample of a given feature of the Work and no later than two weeks after the start of a new or changed operation, the Project Manager and/or his designated representative will meet with the Contractor's Quality Control representative and applicable subcontractor's supervisor and their Quality Control representatives to check the following items, as a minimum:
    a. Workmanship to established quality standards.
    b. Conformance to contract drawings, specifications and the accepted shop drawings.
    c. Adequacy of materials and articles utilized.
    d. Results of inspection and testing methods.
    e. Adequacy of Record Drawings maintained daily.

4. Once accepted, the representative sample will become the physical baseline by which ongoing work is compared for quality and acceptability. To the maximum practical extent, approved representative samples of work elements shall remain visible until all work in the appropriate category is complete. Acceptance of a sample does not waive or alter any contract requirements or show acceptance of any deviation from the contract not approved in writing by the Project Manager.
5. Follow-up Inspection: The Contractor's Quality Control representative will monitor the work to review the continuing conformance of the work to the workmanship standards established during the preparatory and initial inspections.
6. Completion Inspection: This is not an acceptance inspection. Forty eight (48) - hours prior to the completion of an item or segment of work and prior to covering up any work, the Contractor will notify the Project Manager who will verify that the segment of work is substantially complete, all inspections and tests have been completed and the results are acceptable.
    a. The purpose of this inspection is to allow further corrective work upon, or integral to, the completed segment of work.
    b. If any items are determined to be deficient, need correction or are non-conforming, a Deficiency List will be prepared and issued to the respective Contractor for correction, repair or replacement of any deficient or non-conforming items.
    c. The Project Manager and Contractor's Quality Control representative will verify the correction of the deficient and/or non-conforming items prior to the start of the next operation.

7. Substantial Completion Inspection: Prior to requesting a Substantial Completion Inspection by the City, all work and operational systems to be inspected shall be satisfactorily completed and tested by the Contractor.
    a. The Contractor's written request for this inspection shall be made seventy two (72) - hours in advance.
    b. With the request shall come a list of any known deficiencies and when they will be corrected.
    c. If the list is too large or contains too many significant items, in the opinion of the Project Manager, no inspection will be held because of the incompleteness of the work.

8. The Contractor will schedule the Substantial Completion Inspection and will prepare a list of deficient items (punch list) discovered during the inspection.
    a. If during the inspection the list becomes too large or too many significant items are on the list, the inspection will be canceled.
    b. After the inspection is completed, the Deficiency List will be transmitted to the Project Manager identifying all deficient items.

9. Final Acceptance Inspection: After the Contractor has completed all items on the Deficiency List (generated from the Substantial Completion Inspection) he shall request a Final Acceptance Inspection. The request shall be made in writing at least seventy two (72) hours in advance of the inspection.
    a. All areas must be cleaned and ready for turnover prior to this inspection. The Project Manager, the design consultant, a representative of the funding agency (if applicable) and other interested parties will inspect the subject Work to ensure that all deficiencies have been satisfactorily attended to and that no new deficiencies have appeared and that all systems are completely functional.
    b. Any outstanding or additional deficient items will be noted and handled per the requirements of the Substantial Completion Inspection noted above until the Work is acceptable to the Project Manager.

1.8 SAMPLES

A. The Contractor shall maintain at the worksite a copy of all samples submitted and accepted by the City. Samples shall be made available to the designer or the Project Manager's designated representatives for review and comparison in the field. The Project Manager prior to use on the project must accept all items and materials.

B. The installed work will be compared to the samples and if any of the work is not of the same quality, material, finish, color, texture or appearance as the sample, that portion that is not the same will be considered defective and in nonconformance.

C. Contractor selection of samples will only be considered if taken at random. The Contractor shall permit representatives of the City to witness the selection of samples. Inspection or tests of items or materials that fail shall be sufficient cause to terminate further inspections/tests of the same brand, make or source of that product.

D. The Contractor is obligated to correct any item deemed deficient.

PART 2 - PRODUCTS (Not Used)

PART 3 - EXECUTION

3.1 REQUIREMENTS

A. The Contractor is responsible for Quality Control of the Construction. All acquisition of materials, sequence of construction (except as otherwise indicated), and means and methods of construction shall be the responsibility of the Contractor. Establish system to perform sufficient inspection and tests of all items of work, including that of subcontractors, to ensure conformance to Contract Documents for materials, workmanship, construction, finish, functional performance and identification.
   1. Control System: Establish for all construction except where Contract Documents provide for specific compliance tests by testing laboratories and engineers employed by the City.
   2. Control System: Specifically include all testing required by various sections of Specifications.
   3. Quality Control System: Means by which Contractor assures himself that construction complies with requirements of Contract Documents.
      a. Controls: Adequate to cover all construction operations and keyed to proposed construction schedule.

B. All materials required for the contract shall be new except where specified otherwise. The Project Manager may elect to perform additional inspections and/or tests at the place of the manufacture, the shipping point or at the destination to verify conformance to applicable specifications. Inspections and tests performed by the City shall not relieve the Contractor from the responsibility to meet the specifications, nor shall such inspections/tests be considered a guarantee for acceptance of materials that will be delivered at a later time.

C. The Contractor is obligated to correct or remove non-conforming materials, whether in place or not. If necessary, the Project Manager will send written notification to the Contractor to correct or remove the defective materials from the project. If the Contractor fails to respond, the Project Manager may order correction, removal and/or replacement of defective materials by others, in which case the Contractor shall bear all costs incurred by such actions.

D. Materials accepted on the basis of a Certificate of Compliance may be sampled and inspected/tested by the Project Manager or it's Designer at any time. The fact that the materials were accepted on the basis of such certification shall not relieve the Contractor of his responsibility to use materials that conform to the specifications.

E. The Contractor shall impose upon his suppliers the same quality control requirements, including inspection and test procedures, as imposed upon him by the specifications and referenced standards. The Contractor shall apply appropriate controls, designed to ensure that all materials supplied meet the requirements and specifications.

3.2 CONTRACTOR'S QUALITY CONTROL SYSTEM

A. The Contractor is responsible for Quality Control of the Construction. All acquisition of materials, sequence of construction (except as otherwise indicated), and means and methods of construction shall be the responsibility of the Contractor. Establish system to perform sufficient inspection and tests of all items of work, including that of subcontractors, to ensure

conformance to Contract Documents for materials, workmanship, construction, finish, functional performance and identification.

1. Control System: Establish for all construction except where Contract Documents provide for specific compliance tests by testing laboratories and engineers employed by the City.
2. Control System: Specifically include all testing required by various sections of Specifications.
3. Quality Control System: Means by which Contractor assures himself that construction complies with requirements of Contract Documents.
    a. Controls: Adequate to cover all construction operations and keyed to proposed construction schedule.

B. The Contractor shall be responsible for assuring compliance with the quality standards as indicated in the Contract Documents. In addition, the Contractor shall be responsible for:

1. Review of submittals prior to their being forwarded to the Project Manager for review. The Contractor shall mark submittals with comments and shall indicate the date and party conducting the Contractor's review of each submittal.
2. Final inspection of the project prior to calling for the Project Manager to conduct a final inspection. The Contractor shall provide his inspection comments to the Project Manager prior to the scheduled final inspection.
3. Verification of completion of punch-list items prior to calling for verification inspection by the Project Manager.

C. Records: Maintain correct records on appropriate forms for all inspections and tests performed, instructions received from the Project Manager and actions taken as result of those instructions.

1. Records: Include evidence that required inspections or tests have been performed (including type and number of inspections or tests, nature of defects, causes for rejection, etc.) proposed or directed remedial action, and corrective action taken.
2. Document inspections and tests as required by each section of Specifications.

3.3 MATERIAL AND WORKMANSHIP

A. Unless otherwise specified, or indicated on the Drawings, material shall be new, of best quality, and without flaws, and delivered upon completion in an undamaged condition.

B. Workmanship shall be the best of its respective kind. Labor shall be performed in a thorough workmanlike manner by qualified, efficient, and skilled mechanics, acceptable to the Project Manager, and other trades involved on the job requiring acceptable substrate for the performance of their work.

3.4 TESTING – GENERAL

A. Testing Laboratory and/or Engineering services are required for quality control in portions of the work identified in other sections of these specifications.

B. Tests required by these Specifications shall be performed in strict accordance with referenced testing methods, procedures, and conditions. Pertinent data shall be included in clear, comprehensive written forms according to the requirements of these Contract Documents.

C. Contractor: Provide equipment and facilities as required for testing at no additional cost, subject to Project Manager's review, for conducting field tests and for collecting and forwarding samples.
   1. Do not use materials or equipment represented by samples until tests, if required, have been made and materials or equipment found to be acceptable.
   2. Do not incorporate any product into work which becomes unfit for use after acceptance thereof.

D. Testing: Materials or equipment proposed to be used may be tested at any time during their preparation or use. Furnish required samples without charge and give sufficient notice of placing of orders to permit testing. Products may be sampled either prior to shipment or after being received at site of work.

E. Tests: Made by testing laboratory approved by the Project Manager. Except as otherwise provided, sampling and testing of materials and laboratory methods and testing equipment shall be in accordance with latest standards and tentative methods of ASTM.
   1. Specific information concerning testing methods, sample sizes, etc., is included under applicable sections of Specifications.
   2. Any modification of, or elaboration on, these test procedures included for specific materials under their respective sections in Specifications shall take precedence over these procedures.

3.5 OTHER TESTING

A. Following Testing: Performed at expense of Contractor:
   1. Any additional tests required because of any tests that fail subject to following conditions:
      a. Quantity and Nature of Tests: Determined by the Project Manager.
      b. Tests: Taken in presence of the City and/or the Project Manager.
      c. Proof of Noncompliance: Contractor liable for corrective action which the Project Manager feels is required including complete removal and replacement of defective material.

   2. Material Substitution: Any tests of material or equipment offered as substitute for specified item on which test may be required in order to prove its compliance with the Contract Documents.

B. Contractor: May have tests performed on material and equipment for his own information and job control so long as the City does not assume responsibility for costs or for giving them consideration when appraising quality of materials.

3.6 EQUIPMENT TESTING

A. Equipment testing shall be as determined appropriate by the Project Manager to assure proper performance according to the manufacturer's specifications for each equipment item.

B. After all utility connections to equipment have been completed, the Contractor shall conduct final tests of equipment in presence of the City and Project Manager.

C. Unless waived in writing by the Project Manager, the requirements of this section shall apply to all installed equipment items having utility connections.

3.7 NOTIFICATION

A. The Contractor shall be responsible for notifying the Project Manager at least 3 working days prior to commencing work which is identified as requiring testing.

B. The Contractor shall be responsible for scheduling and coordinating all required testing with the Project Manager and, when required by the City's Agents, the City's Independent Testing Agency.

3.8 TEST REPORTS

A. Test reports, whether performed for the City or the Contractor, shall be submitted to the Project Manager and Contractor as soon as results are available. Reports shall be clear, concise, comprehensive written forms containing required test results.

B. Reports of tests made by testing laboratories shall be distributed by testing laboratory as follows:
   1. Two (2) Copies – Project Manager.
   2. One (1) Copy – Contractor.
   3. One (1) Copy – Applicable Supplier or Subcontractor.

PART 4 - MEASUREMENT AND PAYMENT

4.1 MEASUREMENT

A. No separate measurement shall be made for work under this Section.

4.2 PAYMENT

A. No separate payment will be made for work under this Section. The cost of the work described in this Section shall be included in the Contract price. If the City is required to re-inspect work or conduct a special test because a previous inspection, requested by the Contractor, showed that the work was defective or not in conformance, the Manager or authorized representative may deduct from the contract value the cost of re-inspection at the rate of seventy-five dollars ($75.00) per man-hour.

END OF SECTION 01 45 16

SECTION 01 50 00 TEMPORARY FACILITIES AND CONTROLS

PART 1 - GENERAL

1.1 RELATED DOCUMENTS

A. Contract Drawings and general provisions of the Contract, including General and Supplementary Conditions and Division 01 Specification Sections, apply to this Section.

1.2 SUMMARY

A. This Section includes requirements for furnishing, installing, operating, maintaining, and removing temporary construction barriers, enclosures and field facilities including the Contractor's construction offices, staging areas, yards, storage areas, electrical power, telephone, water, fire protection, and sanitary service.

B. Construction Office, Yards, and Storage Areas:
   1. Temporary facilities which the Contractor desires to locate in staging areas adjacent to the Work or within the project limits are subject to approval by the Project Manager.
   2. Contractor Field Office:
      a. The Contractor shall provide a field office for this Project.
      b. The Contractor shall acquire all necessary permits for installation and construction work related to the Contractor’s field office and fencing.
      c. The Contractor shall provide, as part of his on-site field office, a conference room for weekly meetings.
      d. The Contractor shall furnish, install and maintain at least one computer with email in his main field office. This computer should be able to access all email and FTP as part of project submittal process. Provide wireless internet access, secured by password, for use by the Project Manager and Consultant during the work of the Contract.
      e. Jack the mobile office unit off its wheels and provide support.
      f. Install tie downs in compliance with code.
      g. Provide access to the field office and easily accessible space for parking. Grade the field office site, access roadway and parking area for drainage, and surface with gravel paving or crushed stone.
      h. Water and sewer lines to the field office, if installed, shall be installed per code.

C. Electrical Service:
   1. Reference General Conditions Article 327 “Power, Lighting, Heating, Ventilating, Air Conditioning, and Water Services”.
   2. Provide lighting and power for field offices, storage facilities and other construction facilities and areas.
   3. Provide power centers for electrically operated and controlled construction facilities including tools, equipment, testing equipment, interior construction lighting, heating, cooling and ventilation equipment.
   4. Provide night security lighting at secured areas within construction limits at offices, storage facilities, temporary facilities and excavated areas.
   5. Provide battery operated or equivalent emergency lighting facilities at construction areas where normal light failures would cause employees to be subjected to hazardous

conditions. Test such facilities monthly and maintain a record of these tests for the Project Manager's review.

6. Bear all costs of temporary electric and water service permits, fees and deposits required by the governing authorities, and connection charges and temporary easements including installation, maintenance and removal of equipment.

D. Water Service: The Contractor shall make all connections and extensions required and shall make use of water in direct support of the Work. The Contractor shall install an approved Water Department tap at the City's water source prior to obtaining any water. The Contractor shall arrange and pay for its supply/distribution system from the City's point of connection. The location and alignment of the Contractor's temporary supply/distribution system must be approved by the Project Manager prior to its installation. The Contractor shall leave in place all above ground and underground water distribution facilities unless otherwise directed by the Project Manager.

1. The Contractor shall not use in place fire hydrants or standpipes as sources for construction water or potable water.

E. Fire Protection: Furnish, install and maintain temporary portable fire protection equipment throughout the construction period at all buildings (including the project site), maintenance shops, and fuel storage on all large construction equipment and at the location of any flammable materials or construction materials.

F. Sanitary Service: Furnish, install and maintain temporary sanitary facilities and services throughout the construction period.

1. Ensure that separate or single user toilets shall be provided to ensure privacy between the sexes.
2. Provide general washing facilities adequate for the number of employees.
3. Provide special washing facilities adequate for the number of employees engaged in the application of paints, coating and other volatile or hazardous materials.

1.3 SUBMITTALS

A. Refer to Division 01 Sections “Submittals” and “Shop and Working Drawings, Product Data, and Samples” for submittal procedures.

B. Submit a shop drawing within five days of the Notice to Proceed that shows the following:

1. Temporary facilities equipment and materials (include manufacturer’s literature).
2. Details and layout of temporary installations including fences, roads, utilities, parking, buildings, storage areas and drainage plans.
3. Lighting plan showing temporary lighting facilities, electrical service panel location, electrical circuit diagram and anticipated light level on the working roadway, pathway or construction surface.

PART 2 - PRODUCTS

2.1 ELECTRICAL SERVICE

A. Provide temporary power and lighting equipment consisting of fixtures, transformers, panel boards, groundings, lamps, switches, poles, conduits and wiring sized and capable of continuous

service and having adequate capacity to ensure a complete operating system. Comply with NEMA.

B. Provide temporary extension cords to supply tools not longer than two hundred feet (200'), except that additional length may be used if equipment will be grounded within two hundred feet (200')of tool or power.

C. Portable power generators shall be grounded.

2.2 DRINKING WATER SERVICE

A. Provide sanitary materials and equipment that satisfies the requirements of codes and regulations pertaining to temporary water systems. Bottled products may be used if those products comply with codes. Clearly label portable containers having a dispensing tap and used only for drinking water. Provide single service disposable cups and a sanitary container for dispensing cups. A trash receptacle shall be provided and maintained beside each portable water supply.

2.3 FIRE PROTECTION

A. Fire extinguishers shall be UL rated and shall comply with the current City fire code.

2.4 SANITARY SERVICE

A. Provide materials and equipment adequate for the intended purposes, which will neither create unsanitary conditions nor violate the codes applicable to temporary sanitary facilities. Enclosures for toilet and washing facilities shall be weatherproof, sight proof, ventilated and sturdy.

B. Provide portable type toilet facilities that satisfy the requirements of OSHA.

C. Provide washing facilities as needed. Furnish soap, single-service paper towels, towel dispenser and towel receptacle. If paints, coatings and other volatile or hazardous materials injurious to humans will be applied as part of the contract, provide washing facilities with warm water of approximately one hundred twenty degrees (120°) F.

PART 3 - EXECUTION

3.1 ELECTRICAL SERVICE

A. The approximate location of primary power lines is shown on the Construction Drawings. The Contractor shall locate electrical service where it will not interfere with equipment, storage spaces, traffic, and prosecution of the Work or the work of others. Installation shall present a neat and orderly appearance and shall be structurally sound. Maintain service in a manner that will ensure continuous electrical service and safe working conditions.

3.2 TELEPHONE SERVICE

A. Install temporary telephone service in a neat and orderly manner and make structurally and electrically sound to ensure continuous service. Modify, relocate and extend as work progress requires. Place conduit and cables where those products will not interfere with traffic, work areas, materials, handling equipment, storage areas and the work of other contractors. Service lines may be aerial.

3.3 INTERNET SERVICE

A. Install temporary internet service and make structurally and electrically sound to ensure continuous service. Modify, relocate and extend as work progress requires. Place cables and equipment where those products will not interfere with traffic, work areas, materials, handling equipment, storage areas and the work of other contractors. Service lines may be aerial.
   1. Wireless Internet:
      a. Provide wireless internet connection for the use by Project Manager and Consultants. Connection is to be Digital Subscriber Line (DSL) or faster to enable users to transmit images and/or drawings at an acceptable speed.
      b. Wireless internet connection is to be secured by password. Password is to be made available to the Project Manager and Consultant for their use.

3.4 WATER SERVICE

A. Install the systems in a neat and orderly manner. Make them structurally and mechanically sound. Provide continuous service. Modify, relocate and extend the systems as the work progresses.

B. Locate systems where they will be convenient to work stations, sanitary facilities and first aid station but will not interfere with traffic, work areas, materials handling equipment, storage areas or the work of other contractors.

C. Install vacuum breakers, backflow preventers and similar devices in a manner and location which will prevent temporary water from returning to the water mains.

D. Do not incorporate any part of temporary water distribution system into the permanent water distribution system.

3.5 FIRE PROTECTION

A. Install products in conformance with the requirements of the applicable Denver Fire Department and OSHA regulations.
   1. Provide functional fire extinguishers that are clearly identified for fire and an accessible supply of water during the period of construction. These fire extinguishers shall remain in place until permanent fire protection systems are functional.
   2. Furnish not less than one twenty (20) pound fire extinguisher, type 2A-20ABC within ten feet of cutting and welding operations.
   3. Provide twenty (20) pound fire extinguishers, type 2A-20ABC no further than one hundred feet (100') apart in buildings.
   4. Provide not less than one twenty (20) pound fire extinguisher, type 2A-20ABC on any equipment of seventy five (75) horsepower or more.

B. Instruct construction personnel as to location and use of temporary fire protection equipment.

C. Fire extinguishers shall be located for easy access. Their location shall be clearly marked so that they can be seen at least seventy five feet (75') away.

3.6 SANITARY SERVICE

A. Place temporary sanitary (and washing) facilities within the limits of the work and convenient to the work stations. Make these facilities structurally and mechanically sound. Modify, relocate and extend the facilities as required by progress of the work.

B. Service toilets at those time intervals which will minimize the accumulation of wastes and prevent creation of unsanitary conditions, but not less frequent than once per week.

C. The waste from the sanitary and wash facilities shall be disposed of in accordance with all applicable rules, regulations and laws and with the least environmental impact.

3.7 FENCING

A. Contact all utility service companies prior to planning fence location and post locations for certification of current utilities. Locate pothole posts planned within 5-feet of known utilities. Submit fencing plan and typical details to Project Manager at least seven days before planned execution for review and acceptance.

3.8 SIGNAGE

A. Contractor shall not provide any signage for temporary facilities without prior approval from the Project Manager.

3.9 QUALITY CONTROL

A. Provide products for, and the execution of, the Work of this Section that will satisfy the requirements of the NEC, OSHA, and local codes. Provide products that satisfy requirements of NEMA and are UL listed.

3.10 REMOVAL

A. The Contractor shall locate all temporary facilities including the underground utilities so they can be completely removed without damaging permanent work or the worksite of other contractors.

B. The Contractor shall remove all temporary facilities, including all underground utilities, and restore the site to the condition in which the City initially provided it to the Contractor or per the construction documents.

PART 4 - MEASUREMENT AND PAYMENT

4.1 MEASUREMENT

A. Measurement will be made by the contract unit specified for work under this Section.

4.2 PAYMENT

A. Payment will be made at the contract unit price for work under this Section. The cost of the work described in this Section shall be included in the Contract price.

END OF SECTION 01 50 00

SECTION 01 50 01 TRAFFIC AND PEDESTRIAN CONTROL

PART 1 GENERAL

1.1 SECTION INCLUDES

A. Construction Facilities:
   1. Traffic regulation.

1.2 TRAFFIC REGULATION

A. Contractor shall obtain all necessary Street and Sidewalk Occupancy Permits from the City and County of Denver for any and all traffic and pedestrian control within the Public right of way.

B. Contractor shall prepare a traffic control plan for submittal and approval by the City and County of Denver in accordance with the latest addition of the Manual of Uniform Traffic Control Devices by the U.S. Department of Transportation Federal Highway Administration.

C. Signs, Signals, And Devices:
   1. Post Mounted and Wall Mounted Traffic Control and Informational Signs: As approved by authority having jurisdiction.
   2. Traffic Control Signals: As approved by local jurisdictions.
   3. Traffic Cones and Drums, Flares and Lights: As approved by authority having jurisdiction.
   4. Flagperson Equipment: As required by authority having jurisdiction.

D. Flag Persons: Provide trained and equipped flag persons to regulate traffic when construction operations or traffic encroach on public traffic lanes.

E. Flares And Lights: Use flares and lights during hours of low visibility to delineate traffic lanes and to guide traffic.

F. Haul Routes:
   1. Drawings indicate haul routes designated by authorities having jurisdiction for use of construction traffic.
   2. Confine construction traffic to designated haul routes.
   3. Provide traffic control at critical areas of haul routes to regulate traffic, to minimize interference with public traffic.

G. Traffic Signs And Signals:
   1. Provide signs at approaches to site and on site, at crossroads, detours, parking areas, and elsewhere as needed to direct construction and affected public traffic.
   2. Provide, operate, and maintain traffic control signals to direct and maintain orderly flow of traffic in areas under Contractor's control, and areas affected by Contractor's operations.

3. Relocate as Work progresses, to maintain effective traffic control.

H. Removal:
1. Remove equipment and devices when no longer required.
2. Repair damage caused by installation.
3. Remove post settings to depth of 2 feet.

PART 2 PRODUCTS

Not Used.

PART 3 EXECUTION

Not Used.

PART 4 MEASUREMENT AND PAYMENT

4.1 MEASUREMENT

A. Measurement will be based on the percentage complete for the lump sum contract amount for Traffic Control.

4.2 PAYMENT

A. Payment will be made at the lump sum contract price, and shall include required materials, transportation, equipment, labor, and all other items required to complete the work as required in accordance with the Contract Drawings and Specifications.

END OF SECTION 01 50 01

SECTION 01 57 13 EROSION AND SEDIMENTATION CONTROL

PART 1 - GENERAL

1.1 RELATED DOCUMENTS

A. Contract Drawings and general provisions of the Contract, including General and Supplementary Conditions and Division 01 Specification Sections, apply to this Section.

1.2 SUMMARY

A. This section consists of requirements for the installation and maintenance of erosion and sedimentation prevention and protection measures during the construction of the project from just prior to the start of earth disturbance until final site stabilization. The cost of maintaining, repairing, and/or replacement of damaged BMP's will be at the Contractors expense.

Refer to "City and County of Denver Construction Activities Stormwater Manual" by City and County of Denver Wastewater Management Division, Department of Public Works, revised June 2010, or latest edition, at:

https://www.denvergov.org/content/denvergov/en/wastewater-management/capital-projects-management/engineering-and-permits.html

B. Refer to applicable sections within the **Wastewater Capital Projects Management Standard Construction Specifications**, Wastewater Management Division, Department of Public Works, specifications updated September 2014, or latest edition.

C. Conform to requirements of Colorado Department of Health and Environment (CDPHE).

PART 2 - PRODUCTS

2.1 Refer to "City and County of Denver Construction Activities Stormwater Manual".

PART 3 - EXECUTION

3.1 Refer to "City and County of Denver Construction Activities Stormwater Manual".

PART 4 - MEASUREMENT AND PAYMENT

4.1 MEASUREMENT

A. Measurement will be made by the contract unit specified for Erosion and Sedimentation Control.

4.2 PAYMENT

Payment will be made at the contract unit price, and shall include required materials, transportation, equipment, labor, excavation, stockpiling, disposing, hauling off, watering, dust control, as required in accordance with the Contract Drawings and Specifications. The contract price shall include all material, labor and equipment required to establish and maintain specified erosion and sedimentation controls prior to and during construction. The contract price shall include removal of erosion and sedimentation controls after final stabilization.

END OF SECTION 01 57 13

SECTION 01 60 00 MATERIAL AND EQUIPMENT

PART 1 - GENERAL

1.1 RELATED DOCUMENTS

A. Contract Drawings and general provisions of the Contract, including General and Supplementary Conditions and Division 01 Specification Sections, apply to this Section.

1.2 SUMMARY

A. This Section includes administrative and procedural requirements governing the Contractor's selection of products for use in the project.

1.3 DEFINITIONS

A. Definitions used in this Article are not intended to change the meaning of other terms used in the Contract Documents, such as "specialties", "systems", "structure", "finishes", "accessories", and similar terms. Such terms are self-explanatory and have well-recognized meanings in the construction industry.
   1. Products: Are items purchased for incorporation in the Work, whether purchased for the Project or taken from previously purchased stock. The term "Product" includes the terms "material", "equipment", "system" and terms of similar intent.
   2. Named Products: Are items identified by manufacturer's product name, including make or model designation, indicated in the manufacturer's published product literature that is current as of the date of the Contract Documents.
   3. Materials: Are products that are substantially shaped, cut, worked, mixed, finished, refined or otherwise fabricated, processed, or installed to form a part of the Work.
   4. Equipment: Is a product with operational parts, whether motorized or manually operated, that requires service connections such as wiring or piping.

1.4 SUBMITTALS

A. Product List: A list of products is included in each appropriate specification division. Prepare a schedule in tabular form showing each product listed. Include the manufacturer's name and proprietary product names for each item listed.
   1. Coordinate product list with the Contractor's Construction Schedule and the Schedule of Submittals.
   2. Form: Prepare product list with information on each item tabulated under the following column headings:
      a. Related Specification Section number.
      b. Generic name used in Contract Documents.
      c. Proprietary name, model number, and similar designations.
      d. Manufacturer's name and address.
      e. Supplier's name and address.
      f. Installer's name and address.
      g. Projected delivery date or time span of delivery period.

3. Initial Submittal: Within thirty (30) days after date of commencement of the Work, submit three (3) copies of an initial product list. Provide a written explanation for omissions of data and for known variations from Contract requirements.
4. Completed List: Within sixty (60) days after date of commencement of the Work, submit three (3) copies of the completed product list. Provide a written explanation for omissions of data and for known variation from Contract requirements.
5. Action: The Project Manager will respond in writing to Contractor within two (2) weeks or receipt of the completed product list. No response within this period constitutes no objection to listed manufacturers or products, but does not constitute a waiver of the requirement that products comply with Contract Documents. The Project Manager's response will include a list of unacceptable product selections, containing a brief explanation of reasons for this action.

1.5 PRODUCT DELIVERY, STORAGE, AND HANDLING

A. Deliver, store, and handle products according to the manufacturer's recommendations, using means and methods that will prevent damage, deterioration and loss, including theft.
1. Schedule delivery to minimize long-term storage at the site and to prevent overcrowding of construction spaces.
2. Coordinate delivery with installation time to assure minimum holding time for items that are flammable, hazardous, easily damaged, or sensitive to deterioration, theft, and other losses.
3. Deliver products to the site in an undamaged condition in the manufacturer's original sealed container or other packaging system, complete with labels and instructions for handling, storing, unpacking, protecting and installing.
4. Inspect products upon delivery to ensure compliance with the Contract Documents and to ensure that products are undamaged and properly protected.
5. Store products at the site in a manner that will facilitate inspection and measurement of quantity or counting of units.
6. Store products subject to damage by the elements above ground, under cover in a weathertight enclosure, with ventilation adequate to prevent condensation. Maintain temperature and humidity within range required by manufacturer's instructions.

1.6 GENERAL PRODUCT REQUIREMENTS

A. General Product Requirements: Provide products that comply with the Contract Documents, that are undamaged and, unless otherwise indicated, new at the time of installation.
1. Provide products complete with accessories, trim, finish, safety guards, and other devices and details needed for a complete installation and the intended use and effect.
2. Standard Products: Where available, provide standard products of types that have been produced and used successfully in similar situations on other projects.

B. It is the responsibility of the Contractor and his installers, as experts, to notify the Project Manager of any specified product that to his knowledge will not meet the requirements or is unsuited to the application indicated or specified.

C. The use of manufacturer's and trade names is intended only to establish standards of quality and performance and not to limit competition.

D. Substitution of Materials and Equipment: All bids are to be based on those materials and equipment specified in the Contract Documents. Substitutions after the bid will be made in

accordance with the provisions of General Contract Conditions Article 406 “Substitution of Materials and Equipment”, and Division 01 Section “Substitutions”.

PART 2 - PRODUCTS

2.1 PRODUCT SELECTION PROCEDURES

A. The Contract Documents and governing regulations govern product selection. Procedure governing product selection include the following:

1. Proprietary Specification Requirements: Where Specifications name only a single product or manufacturer, provide the product indicated. No substitutions will be permitted.
2. Semi-proprietary Specification Requirements:
    a. Where Specifications name two or more products or manufacturers, provide one (1) of the products indicated. No substitutions will be permitted.
    b. Where Specifications specify products or manufacturers by name, accompanied by the term “or equal” or “or approved equal,” comply with the Contract Document provisions concerning “substitutions” to obtain approval for use of an unnamed product.
3. Non-proprietary Specifications: When Specifications list products or manufacturers that are available and may be incorporated in the work, but do not restrict the Contractor to use of these products only, the Contractor may propose any available product that complies with Contract requirements. Comply with Contract Document provisions concerning “substitutions” to obtain approval for use of an unnamed product.
4. Descriptive Specification Requirements: Where Specifications describe a product or assembly, listing exact characteristics required, with or without use of a brand or trade name, provide a product or assembly that provides the characteristics and otherwise complies with Contract requirements.
5. Performance Specification Requirements: Where Specifications require compliance with performance requirements, provide products that comply with these requirements and are recommended by the manufacturer for the application indicated. Manufacturer’s recommendations may be contained in published product literature or by the manufacturer’s certification of performance.
6. Compliance with Standards, Codes and Regulations: Where Specifications only require compliance with an imposed code, standard, or regulation, select a product that complies with the standards, codes, or regulations specified.
7. Visual Matching:
    a. Where Specifications require matching an established Sample, the Project Manager’s decision will be final on whether a proposed product matches satisfactorily.
    b. Where no product available within the specified category matches satisfactorily and complies with other specified requirements, comply with provisions of the Contract Documents concerning “substitutions” for selection of a matching product in another product category.
8. Visual Selection: Where specified product requirements include the phase “...as selected from manufacturer’s standard colors, patterns, textures...” or a similar phrase, select a product and manufacturer that complies with other specified requirements. The Project Manager will select the color, pattern, and texture from the product line selected.

PART 3 - EXECUTION

3.1 INSTALLATION OF PRODUCTS

A. Comply with manufacturer's instructions and recommendations for installation of products in the applications indicated. Anchor each product securely in place, accurately located and aligned with other work. Clean exposed surfaces and protect as necessary to ensure freedom from damage and deterioration at time of Substantial Completion.

3.2 QUALITY ASSURANCE

A. Source Limitations:
   1. To the fullest extent possible, provide products of the same kind from a single source.
   2. Substitutions to the specified products will only be allowed in accordance with General Contract Conditions Article 406 "Substitution of Materials and Equipment", and Division 01 Section "Substitutions".

B. Nameplates: Except for required labels and operating data, do not attach or imprint manufacturer's or producer's nameplates or trademarks on surfaces of products that will be exposed to view in occupied spaces or on the exterior.
   1. Labels: Locate required product labels and stamps on concealed surfaces or, where required for observation after installation, on accessible surfaces that are not conspicuous.
   2. Equipment Nameplates: Provide a permanent nameplate on each item of service-connected or power-operated equipment. Locate on an easily accessible surface that is inconspicuous in occupied spaces. The nameplate shall contain the following information and other essential operating data:
      a. Name of product and manufacturer.
      b. Model and serial number.
      c. Capacity.
      d. Speed.
      e. Ratings.

PART 4 - MEASUREMENT AND PAYMENT

4.1 MEASUREMENT

A. No separate measurement shall be made for work under this Section.

4.2 PAYMENT

A. The cost of the Work described in this Section shall be included in the Contract price.

END OF SECTION 01 60 00

SECTION 01 66 00 STORAGE AND PROTECTION

PART 1 - GENERAL

1.1 RELATED DOCUMENTS

A. Contract Drawings and general provisions of the Contract, including General and Supplementary Conditions and Division 01 Specification Sections, apply to this Section.

1.2 SUMMARY

A. The Work specified in this Section consists of providing storage and protection of the materials, products and supplies which are to be incorporated into the construction and indicating such storage areas on the Contract Drawings with the location and dates when such areas will be available for each purpose.

B. Reference General Contract Conditions Article 803 “Protection of Property and Work in Progress”.

1.3 SUBMITTALS

A. Refer to Division 01 Sections “Submittals” and “Shop and Working Drawings, Product Data, and Samples” for submittal procedures. Submit concurrently with submittals required in Division 01 Section “Layout of Work and Surveys”.

B. Storage Site Plan: Submit working drawings showing locations of storage areas not indicated on the Contract Drawings.

C. Storage and Protection Methods: Submit descriptions of proposed methods and locations for storing and protecting products.

PART 2 - PRODUCTS

2.1 MATERIALS

A. Materials required for the storage and protection of the items specified shall be durable, weatherproof and either factory finished or painted to present an appearance acceptable to the Project Manager. Storage facilities shall be uniform in appearance with similar materials used to the maximum extent possible.

PART 3 - EXECUTION

3.1 GENERAL REQUIREMENTS OF EXECUTION

A. Palletize materials, products and supplies which are to be incorporated into the construction and stored off the ground. Store these items in a manner which will prevent damage and which will facilitate inspection. Leave seals, tags and labels intact and legible. Maintain access to products to allow inspection. Protect products that would be affected by adverse environmental conditions.

B. Periodically inspect stored products to ensure that products are being stored as stipulated and that they are free from damage and deterioration.

C. Do not remove items from storage until they are to be incorporated into the Work.

D. The Contractor shall ensure that all protective wrappings and coverings are secure and ballasted to prevent any items from deterioration and/or subsequent dislodgment. All items on the worksite that are subject to becoming windborne shall be ballasted or anchored.

3.2 HANDLING AND TRANSPORTATION

A. Handling:
1. Avoid bending, scraping or overstressing products. Protect projecting parts by blocking with wood, by providing bracing or by other approved methods.
2. Protect products from soiling and moisture by wrapping or by other approved means.
3. Package small parts in containers such as boxes, crates, or barrels to avoid dispersal and loss. Firmly secure an itemized list and description of contents to each container.
4. Refer to Division 32 Sections related to landscape materials for proper handling and storage of plant material.

B. Transportation: Conduct the loading, transporting, unloading, and storage of products so that they are kept clean and free from damage.
1. Refer to Division 32 Sections related to landscape materials for proper transportation of plant material.

3.3 STORAGE

A. Store items in a manner that shall prevent damage to the City's property. Do not store hydraulic fluids, gasoline, liquid petroleum, gases, explosives, diesel fuel, and other flammables in excavations, except one day's supply of diesel fuel may be stored in open excavations.

B. Provide sheltered weather-tight or heated weather-tight storage as required for products subject to weather damage.

C. Provide blocking, platforms or skids for products subject to damage by contact with the ground.

D. All material shall be stored according to the manufacturer's recommendations. Any material that has to be stored within specified temperature or humidity ranges shall have a twenty four (24) hour continuously written recording made of the applicable condition. Should the recording show that the material was not stored within the recommended ranges the material shall be considered defective and in nonconformance. If a certification from the manufacturer's engineering design representative is provided stating that the actual variations are acceptable and will in no way harm the material or affect warranties, then the deficiency will be considered corrected.

E. Store hazardous material separately, with all material marked with a label showing the hazard and how to treat exposure to the material.

3.4 LABELS

A. Storage cabinets and sheds that will contain flammable substances and explosive substances shall be labeled FLAMMABLE--KEEP FIRE AWAY and NO SMOKING with conspicuous lettering and conforming to OSHA requirements.

PART 4 - MEASUREMENT AND PAYMENT

4.1 MEASUREMENT

A. No separate measurement shall be made for work under this Section.

4.2 PAYMENT

A. The cost of the Work described in this Section shall be included in the Contract price. See Division 01 Section “Schedule of Values” for additional requirements for the possible payment of stored material.

END OF SECTION 01 66 00

SECTION 01 71 23 LAYOUT OF WORK AND SURVEYS

PART 1 - GENERAL

1.1 RELATED DOCUMENTS

A. Contract Drawings and general provisions of the Contract, including General and Supplementary Conditions and Division 01 Specification Sections, apply to this Section.

1.2 SUMMARY

A. This Section includes the procedures and accuracy requirements for survey services for layout of work and field measurement of work quantities to be determined by surveys.
   1. The Work is to be verified and coordinated with Contract Drawings. Variations between Contract Drawings and actual field conditions are to be immediately brought to the attention of the Project Manager.
   2. Reference Construction General Contract Conditions Article 318 “Construction Surveys” and Article 319 “Preservation of Permanent Land Survey Control Markers”.

1.3 SUBMITTALS

A. Refer to Division 01 Sections “Submittals” and “Shop and Working Drawings, Product Data, and Samples” for the submittal process.

B. Field Notes: Submit Copies of original pages of field notes.

C. Closeout Submittals:
   1. Original field notebooks when filled and at end of contract.
   2. Measurements for Record Documents.

PART 2 - PRODUCTS (Not Used)

PART 3 - EXECUTION

3.1 CONSTRUCTION LINES AND GRADES

A. The Contractor shall make surveys and layouts as necessary to delineate the work. The Contractor shall make the surveys for the proper performance of the Work. As a part of such surveys, the Contractor shall furnish, establish, and maintain in good order survey control points that may be required for the completion of the Work subject to the approval of the Project Manager as to their location, sufficiency, and adequacy. However, such approval by the Project Manager shall not relieve the Contractor of his responsibility for the accuracy of his survey work.

B. The Contractor shall furnish skilled labor, instrument platforms, ladders, and such other temporary structures as may be necessary for making and maintaining points and lines in connection with the surveys required.

C. The City may draw the Contractor's attention to errors or omissions in lines or grades, but the failure to point out such errors or omissions shall not give the Contractor any right or claim nor shall in any way relieve the Contractor of his obligations according to the terms of this contract.

D. The Contractor's instruments and other survey equipment shall be accurate, suitable for the surveys required in accordance with recognized professional standards and in proper condition and adjustment at all times. Surveys shall be performed under the direct supervision of a Colorado licensed surveyor.

3.2 DIGITAL FILES

A. If approved by the Project Manager, Contractor may elect to utilize design consultant's digital CADD files as guidance for layout and location of site elements.

B. Layout and location of site elements, grades and features from digital CADD files does not relieve the Contractor of requirements, locations and grades shown on the Contract Drawings.

C. Contractor is responsible to verify locations of elements staked with digital data to assure conformance with the Contract Drawings at a level of accuracy as stated in Section 3.3 below.

3.3 SURVEYING ACCURACY AND TOLERANCES IN SETTING SURVEY, LAYOUT, AND QUANTITY CALCULATION STAKES

A. The tolerances generally applicable in setting survey stakes shall be as set forth in the CDOT Survey Manual, latest edition. Such tolerances shall not supersede stricter tolerances required by the drawings or specifications, and shall not otherwise relieve the Contractor of responsibility for measurements in compliance therewith.

3.4 RECORD MEASUREMENTS

A. Provide record measurement for items that will be hidden or visible including all civil, mechanical and electrical, control work, and all utilities that are placed in concrete, earth, or behind walls shall be made.

B. Items located within or five feet beyond a building shall be referenced to building column lines and finish floor elevations.

C. Special attention shall be paid to items requiring service, sensors, items with moving parts, access points and locations of junctions, elevation changes, and directional changes.

PART 4 - MEASUREMENT AND PAYMENT

4.1 MEASUREMENT

A. Measurement will be made by the contract unit specified for work under this Section

4.2 PAYMENT

A. Payment will be made at the contract unit price for work under this Section. The cost of the work described in this Section shall be included in the Contract price.

END OF SECTION 01 71 23

SECTION 01 74 23 CLEANING

PART 1 - GENERAL

1.1 RELATED DOCUMENTS

A. Contract Drawings and general provisions of the Contract, including General and Supplementary Conditions and Division 01 Specification Sections, apply to this Section.

1.2 SUMMARY

A. This Section includes the requirements for maintaining a clean, orderly, hazard free worksite during construction, and final cleaning for the City's Final Acceptance. Failure to maintain the worksite will be grounds for withholding monthly payments until corrected to the satisfaction of the Project Manager.

B. Reference General Contract Conditions as listed:
1. Article 325 "Cleanup During Construction".
2. Article 803 "Protection of Property and Work in Progress".
3. Article 2001 "Cleanup Upon Completion".

1.3 JOB CONDITIONS

A. Safety Requirements: Maintain the worksite in a neat, orderly and hazard-free manner in conformance with all federal, state and local rules, codes, regulations and orders, including all OSHA requirements, until Final Acceptance of the Work. Keep catwalks, underground structures, worksite walks, sidewalks, roadways and streets, along with public and private walkways adjacent to the worksite, free from hazards caused by construction activities.
1. Inspect those facilities regularly for hazardous conditions caused by construction activities.

B. Hazards Control:
1. Store volatile wastes in covered metal containers and remove those wastes from worksite daily.
2. Do not accumulate wastes which create hazardous conditions.
3. If volatile and noxious substances are being used in spaces that are not naturally ventilated, provide artificial ventilation.
4. Hazard controls shall conform to the applicable federal, state, and local rules and regulations.
5. Provide appropriate waste receptacles in all areas in which employees are working. Waste receptacles shall be kept covered at all times. All materials on site shall be anchored and covered to prevent any objects from becoming wind-borne.

C. Access: Maintain the worksite to permit access by other City contractors as required and to allow access by emergency personnel.

PART 2 - PRODUCTS

2.1 CLEANING MATERIALS

A. Utilize the type of cleaning materials recommended by the manufacturer for the surfaces to be cleaned.

B. Maintain current Safety Data Sheets (SDS) on site for all chemicals. Refer to following link for associated OSHA requirements. https://www.osha.gov/pls/oshaweb/owadisp.show_document?p_table=STANDARDS&p_id=10103

C. Ensure proper disposal of all wastes generated from the use of these materials. Must ensure compliance with all environmental regulations.

PART 3 - EXECUTION

3.1 INTERIM CLEANING

A. Clean the worksite every shift/workday for the duration of the construction contract. Maintain structures, grounds, storage areas, and other areas of worksite, including public and private properties immediately adjacent to worksite, free from accumulations of waste materials caused by construction operations. Place waste materials in covered metal containers. All hard concrete, steel, wood, and finished walking surfaces shall be swept clean daily.

B. Remove or secure loose material on open decks and on other exposed surfaces at the end of each workday or more often in a manner that will maintain the worksite hazard free. Secure material in a manner that will prevent dislodgment by wind and other forces.

C. Sprinkle waste materials with water or acceptable chemical palliative to prevent blowing of dust.

D. Promptly empty waste containers when they become full and legally dispose of the contents at dumping areas off the City’s property.

E. Control the handling of waste materials. Do not permit materials to be dropped or thrown from structures.

F. Immediately remove spillage of construction related materials from haul routes, work site, private property, or public rights of way.

G. Clean only when dust and other contaminants will not precipitate upon newly painted surfaces.

H. Cleaning shall be done in accordance with manufacturer’s recommendation.

I. Cleaning shall be done in a manner and using such materials as to not damage the Work.

J. Clean areas prior to painting or applying adhesive.

K. Clean all heating and cooling systems prior to operations. If the Contractor was allowed to use the heating and cooling system it shall be cleaned prior to testing.

L. Clean all areas that will be concealed prior to concealment.

3.2 FINAL CLEANING

A. Inspect interior and exterior surfaces, including concealed spaces, in preparation for completion and acceptance.

B. Remove dirt, dust, litter, corrosion, solvents, paint, stains, and extraneous markings.

C. Remove surplus materials, except those materials intended for maintenance.

D. Remove all tools, appliances, equipment, and temporary facilities used in the construction.

E. Remove detachable labels and tags. File them with the manufacturer's specifications for that specific material for the City's records.

F. Repair damaged materials to the specified finish or remove and replace.

G. Clean all catch basins, manholes, drains, strainers, and filters after all trades have completed their work and just before Final Acceptance

H. Sweep roadway, driveways, floors, steps, and walks.

I. Interior areas of buildings shall be vacuumed clean and mopped.

J. Final cleanup applies to all areas within and adjacent to the site.

PART 4 - MEASUREMENT AND PAYMENT

4.1 MEASUREMENT

A. No separate measurement shall be made for work under this Section.

4.2 PAYMENT

A. No separate payment will be made for work under this Section. The cost of the work described in this Section shall be included in the Contract price.

END OF SECTION 01 74 23

SECTION 01 77 00 CONTRACT CLOSEOUT

PART 1 - GENERAL

1.1 RELATED DOCUMENTS

A. Contract Drawings and general provisions of the Contract, including General and Supplementary Conditions and Division 01 Specification Sections, apply to this Section.

1.2 SUMMARY

A. This Section includes procedures required for Substantial Completion under Title 19 and Final Completion and Acceptance of the Work under Title 20 of the General Contact Conditions and Division 01 Section "Contract Record Documents".

B. Reference General Contract Conditions as listed:
1. Article 906 "Applications for Payment".
2. Article 909 "Additional Withholding of Progress Payments".
3. Article 2003 "Final Settlement".

1.3 PREPARATION FOR FINAL INSPECTION

A. Before requesting inspection for Final Acceptance of the Work by the City, inspect, clean, and repair the Work as required.

1.4 FINAL INSPECTION

A. When the Contractor considers that the Work is complete, he shall submit written certification that:
1. All punch list items have been completed.
2. All clean up at the project site has been accomplished.
3. Work has been inspected by the Contractor for compliance with contract documents.
4. Work has been completed in accordance with contract documents.
5. Work is ready for final inspection by the City.
6. All required Record Documents have been submitted and accepted.
7. All damaged or destroyed real, personal, public or private property has been repaired or replaced.
8. All operation and maintenance manuals have been submitted and accepted and all training has been completed.

B. The Project Manager will inspect to verify the status of completion with reasonable promptness after receipt of such certifications. The inspection of the work will be done in accordance with the General Conditions.

C. If the Project Manager finds incomplete or defective work:
1. The Project Manager may, at his sole discretion, either terminate the inspection or prepare a punch list and notify the Contractor in writing, listing incomplete or defective work.
2. The Contractor shall take immediate steps to remedy stated deficiencies and send a second written certification to the Project Manager that Work is complete.

3. The Project Manager will then re-inspect the Work.

1.5 REINSPECTION FEES

A. Should the Project Manager perform re-inspection due to failure of the Work to comply with the claims of status of completion made by the Contractor:
   1. The Contractor shall compensate the City for such additional services at the rate of seventy-five dollars ($75.00) per man-hour.
   2. The City shall deduct the amount of such compensation from the final payment to the Contractor.

1.6 FINAL ADJUSTMENT OF ACCOUNTS

A. Submit a Final Statement of Accounting to the Project Manager.

B. The Final Statement of Accounting shall reflect all adjustments to the contract amount and shall include the following:
   1. The original contract amount.
   2. Additions and deductions resulting from:
      a. Previous change orders.
      b. Allowances.
      c. Final quantities for unit price items. Along with this statement shall be detailed backup for the quantities.
      d. Deductions or corrected work.
      e. Penalties.
      f. Deductions for liquidated damages.
      g. Deductions for re-inspection payments.
      h. City resurveys required due to the Contractor.
      i. Other adjustments.

   3. Total contract amount, as adjusted.
   4. Previous payments.
   5. Sum remaining due.

C. If required, the Project Manager will prepare a final change order, reflecting approved adjustments to the Contract sum which were not previously made by change orders.

1.7 FINAL APPLICATION FOR PAYMENT

A. The Contractor shall submit the final application for payment in accordance with the procedures and requirements stated in the General Conditions Title 20 “Final Completion and Acceptance of the Work”.

PART 2 - PRODUCTS (Not Used)

PART 3 - EXECUTION (Not Used)

PART 4 - MEASUREMENT AND PAYMENT

4.1 MEASUREMENT

A. No separate measurement shall be made for work under this Section.

4.2 PAYMENT

A. No separate payment will be made for work under this Section. The cost of the work described in this Section shall be included in the Contract price.

END OF SECTION 01 77 00

SECTION 01 78 23 OPERATION AND MAINTENANCE DATA

PART 1 - GENERAL

1.1 RELATED DOCUMENTS

A. Contract Drawings and general provisions of the Contract, including General and Supplementary Conditions and Division 01 Specification Sections, apply to this Section.

1.2 SUMMARY

A. This Section consists of requirements for preparing and submitting operation and maintenance data for mechanical, electrical, and other specified equipment.

1.3 SUBMITTALS

A. Refer to Division 01 Sections “Submittals” and “Shop and Working Drawings, Product Data, and Samples” for submittal procedures.

B. Submit one (1) digital copy and two (2) bound hard copy of the proposed Operation and Maintenance Data Manual format including a table of contents not less than ninety (90) days prior to acceptance tests and final inspection.

C. Submit one (1) digital copy and two (2) bound hard copy of Operation and Maintenance Data Manual within ten days after system startup is complete. These copies shall incorporate any comments made on the previous submittals, along with final readings on all settings and gauges taken while the system is in fully satisfactory operation.

1.4 CONTINUOUS UPDATING PROGRAM

A. Furnish one digital copy of the Contractor’s letter indicating that suppliers have been notified to provide updated operation and maintenance data, service bulletins, and other information pertinent to the equipment, as it becomes available.

PART 2 - PRODUCTS

A. The following are the requirements of hard copies:
   1. Paper Size: 8-1/2-inches x 11-inches.
   2. Paper: White bond, at least twenty (20) pound weight.
   3. Text: Typewritten.
   4. Printed Data: Manufacturer’s catalog cuts, brochures, operation and maintenance data. Clear reproductions thereof will be acceptable. If this data is in color, all final manuals must contain color data.
   5. Drawings: 8-1/2-inches x 11-inches, bound with the text. Larger drawings are acceptable provided they are folded to fit into a pocket inside the rear cover of the manual. Reinforce edges of large drawings.
   6. Prints of Drawings: Black ink on white paper, sharp in detail, and suitable for making reproductions.

7. Flysheets: Separate each portion of the manual with colored, neatly prepared flysheets briefly describing the contents of the ensuing portion.
8. Covers: Provide forty (40) to fifty (50)-mil, clear plastic, front and plain back covers for each manual. The front covers shall contain the information required in Article 3.2 below.
9. Bindings: Conceal the binding mechanism inside the manual; lockable 3 ring binders shall be provided.

PART 3 - EXECUTION

3.1 GENERAL

A. Assemble each operation and maintenance manual using the manufacturer's latest standard commercial data.

3.2 COVER

A. Include the following information on the front cover and on the inside cover sheet:
   1. Title: "Operation and Maintenance Instructions".
   2. Title of structure or facility.
   3. Title and number of contract.
   4. Contractor's name and address.
   5. General subject of the manual.
   6. Leave spaces for signatures of the City representatives and acceptance date.

3.3 CONTENTS OF THE MANUAL

A. An index of all volumes in each volume of multiple volume systems.

B. An index in front of each volume. List and combine the literature for each system in the sequence of operation.

C. Names, addresses, and telephone numbers of Contractor, suppliers, and installers along with the manufacturer's order number and description of the order.

D. Name, address, and telephone numbers of manufacturer's nearest service representatives.

E. Name, address, and telephone number of nearest parts vendor and service agency.

F. Copy of guaranties and warranties issued to, and executed in the name of, the City.

G. Anticipated date City assumes responsibility for maintenance.

H. Description of system and component parts including theory of operation.

I. Pre-operation check or inspection list.

J. Procedures for starting, operating and stopping equipment.

K. Post operation check or shutdown list.

L. Inspection and adjustment procedures.

M. Troubleshooting and fault isolation procedures for on-site level of repair.

N. Emergency operating instructions.

O. Accepted test data.

P. Maintenance schedules and procedures.

Q. Test procedures to verify the adequacy of repairs.

R. One copy of each wiring diagram.

S. One (1) copy of each piping diagram.

T. Location where all measurements are to be made.

U. One (1) copy of each duct diagram.

V. One (1) copy of control diagram.

W. One (1) copy of each accepted shop drawing.

X. One (1) copy of software programs imputable or changeable on site.

Y. Manufacturer's parts list with catalog names, numbers and illustrations.

Z. A list of components which are replaceable by the City.

AA. An exploded view of each piece of the equipment with part designations.

BB. List of manufacturer's recommended spare parts, current prices and recommended quantities for two (2) years of operation.

CC. List of special tools and test equipment required for the operation, maintenance, adjustment, testing and repair of the equipment, instruments and components.

DD. Scale and corrosion control procedures.

EE. Disassembly and re-assembly instructions.

FF. Troubleshooting and repair instructions.

GG. Calibration procedures.

HH. Ordering information.

II. Training course material used to train City staff, including slides and other presentation material.

PART 4 - MEASUREMENT AND PAYMENT

4.1 MEASUREMENT

A. No separate measurement shall be made for work under this Section.

4.2 PAYMENT

A. No separate payment will be made for work under this Section. The cost of the work described in this Section shall be included in the Contract price.

END OF SECTION 01 78 23

SECTION 01 78 35 WARRANTIES AND BONDS

PART 1 - GENERAL

1.1 RELATED DOCUMENTS

A. Contract Drawings and general provisions of the Contract, including General and Supplementary Conditions and Division 01 Specification Sections, apply to this Section.

1.2 SUMMARY

A. This Section includes the requirements for preparing and submitting warranties and bonds required by these specifications.

A. Reference the General Contract Conditions as listed:
1. Article 111 “Final Completion”.
2. Article 1501 “Surety Bonds”.
3. Article 1502 “Performance Bond”.
4. Article 1503 “Payment Bond”.
5. Article 1801 “Contractor’s Warranties, Guarantees, and Correction of Work”.
6. Article 1802 “Performance During Warranty Period”.

1.3 SUBMITTALS

A. Refer to Division 01 Section “Submittals” for submittal procedures.

B. Submit executed warranties and bonds.

PART 2 - PRODUCTS (Not Used)

PART 3 - EXECUTION

3.1 WARRANTIES AND BONDS

A. Execute the warranties and bonds required by the Contract Documents. Prepare and submit a list of all warranties and bonds on the form provided by the City. Reference Division 01 Section “Standard Forms”.

B. Provide warranties or bonds for the materials, labor, and time period set forth in the sections of these specifications requiring such documents. All warranties shall be in accordance with the General Contract Conditions. Refer to the individual specifications sections for all specific items requiring longer warranty periods.

C. Provide all warranties and bonds that the manufacturer or supplier furnishes at no additional cost in regular commercial trade. All warranties shall be in accordance with the General Contract Conditions. Refer to the individual specifications sections for all specific items requiring longer warranty periods.

PART 4 - MEASUREMENT AND PAYMENT

4.1 MEASUREMENT

A. No separate measurement shall be made for work under this Section.

4.2 PAYMENT

A. No separate payment will be made for work under this Section. The cost of the work described in this Section shall be included in the Contract price.

END OF SECTION 01 78 35

SECTION 01 78 39 CONTRACT RECORD DOCUMENTS

PART 1 - GENERAL

1.1 RELATED DOCUMENTS

A. Contract Drawings and general provisions of the Contract, including General and Supplementary Conditions and Division 01 Specification Sections, apply to this Section.

1.2 SUMMARY

A. This Section includes the requirements for maintaining, marking, recording, and submitting contract record documents, including shop drawings, warranties, contract documents, and Contractor records.

B. Reference General Contract Conditions Article 324 “Documents and Samples at the Site” and Division 32 Sections “Irrigation Systems” and “Automatic Irrigation Controllers”.

1.3 SUBMITTALS

A. Each submittal of record documents shall contain the following information:
   1. Date.
   2. Project title and numbers.
   3. Contractor’s name and address.
   4. Title and number of each record document.
   5. Certification that each document as submitted is complete and accurate.
   6. Signature of the Contractor or his authorized representative.

B. At the completion of this contract, deliver all record documents including the following:
   1. Shop drawings, diagrams, illustrations, schedules, charts, brochures and other similar data, updated to record status.
   2. Warranties, guarantees, and bonds.
   3. Contract documents.
   4. Contractor records.

PART 2 - PRODUCTS (Not Used)

PART 3 - EXECUTION

3.1 MAINTENANCE OF DOCUMENTS

A. The Contractor shall maintain at the worksite on a current basis one record copy of all drawings, specifications, addenda, change orders, approved shop drawings, working drawings, product data, and samples in good order and marked currently to record all changes made during construction.

B. Maintain at the field office one copy of the following record documents:
   1. Contract Documents:

a. Contract drawings with all clarifications, requests for information, directives, changes and field-modified conditions clearly posted.
b. Contract specifications with all clarifications, requests for information, changes, directives and record of manufacturer actually used along with product trade name.
c. Reference Standards in accordance with Division 01 Section "Definitions and Conventions".
d. One set of drawings to record the following:
    1) Horizontal and vertical location of underground utilities affected by the Work.
    2) Location of internal utilities; include valves, controls, conduit, duct work, switches, pressure reducers, size reducers, transitions, crosses, tees, filters, motors, heaters, dampers, regulators, safety devices, sensors, access doors, and appurtenances that are concealed in the construction shall be shown with dimensions given from a visible and recognizable reference to the item being located in all three dimensions. The drawing shall also reference the applicable submittal for the item being located.
    3) Field changes of dimensions and details including as-installed elevations and location (station and offset).
    4) Details not on original contract drawings but obtained through requests for information or by other communications with the City.

2. Contractor Records:
    a. Daily QC Reports.
    b. Certificates of compliance for materials used in construction.
    c. Nonconformance Reports (NCRs).
    d. Remedial Action Requests (RARs).
    e. Completed inspection list.
    f. Inspection and test reports.
    g. Test procedures.
    h. Qualification of personnel.
    i. Approved submittals.
    j. Material and equipment storage records.
    k. Safety Plan.
    l. Erosion, sediment, hazardous and quality plans.
    m. Hazardous material records.
    n. First report of injuries.

3.2 RECORDING

A. Keep record documents current daily.

B. Legibly mark copies of the contract drawings to record actual construction.

C. Legibly mark up each Section of the technical specifications and contract drawings to record:
    1. Changes made by change orders, requests for information, substitutions, and variations approved by submittals.

3.3 DOCUMENT MAINTENANCE

A. Maintain Documents in a clean, dry and legible condition, which shall be turned over to the City prior to final acceptance.

B. Do not use record documents for construction purposes.

C. Make documents available for inspection by the Project Manager and any others having jurisdiction.

3.4 REVIEW

A. Project Manager or their designated representative will inspect the Record Drawings at each weekly progress meeting to ensure that they are being maintained and contain the most current data.

B. Prior to any application for payment, the Project Manager or his designated representative will inspect the record documents to ensure that they are being maintained and contain the most current correct data with particular attention to Record Drawings.

C. If, during the inspection, the Project Manager determines that the documents are not being maintained and kept current as to as-installed conditions, an amount may be withheld from the payment request and deducted from the contract value to cover the City's cost of collecting and recording the Record Contract data. This cost will be determined on the basis of seventy-five dollars ($75.00) per man-hour of effort.

3.5 QUALITY CONTROL

A. Record documents shall be prepared by Contractor to a high standard of quality, such as that set forth in MIL STD 100, American National Standard Drafting Manual (ANSI Y14), or other relevant lower tier specification defining equal drafting quality for microfilming, except for daily reports.

3.6 IRRIGATION RECORD DRAWINGS

A. Refer to Division 32 Section "Irrigation Systems", Article 1.5.G

PART 4 - MEASUREMENT AND PAYMENT

4.1 MEASUREMENT

A. No separate measurement shall be made for work under this Section.

4.2 PAYMENT

A. No separate payment will be made for work under this Section. The cost of the work described in this Section shall be included in the Contract price.

END OF SECTION 01 78 39

SECTION 01 99 90 STANDARD FORMS

PART 1 - GENERAL

1.1 RELATED DOCUMENTS

A. Contract Drawings and general provisions of the Contract, including General and Supplementary Conditions and Division 01 Specification Sections, apply to this Section.

1.2 SUMMARY

A. This section includes forms to be used by the Contractor throughout the duration of the work.
   1. This is not a complete listing of all required forms.
   2. Required Forms
      a.
   3. The Contractor may create their own forms listed under Sample Forms recreate some of the forms so that they are compatible with the Contractor's Project Management system. However, Contractor must receive prior approval from the Project Manager before using modified forms.
   4. The Contractor shall properly complete all forms required by the contract or the Project Manager.
   5. The Project Manager shall review and approve all submitted forms. If submitted forms are not acceptable the Contractor shall resubmit forms in an acceptable format.

1.3 REQUIRED FORMS

A. The Contractor shall use the following required forms provided by the City
   1. Submittal Log.
   2. Request for Substitution.
   3. Quality Control Report.
   4. Request for Information Log.
   5. Non-Conformance Report.
   6. Corrective Action Report.
   7. Pay Application Forms.

1.4 SAMPLE FORMS

A. The Contractor may create their own forms to be similar in style and content of the examples listed below.
   1. Schedule.
   2. Contractor/Subcontractor Warranty (reference the General Contract Conditions).
   3. Request for Substantial Completion Letter.

PART 2 - PRODUCTS (Not Used)

PART 3 - EXECUTION

3.1 COMPLETING FORMS

A. All documents are to be filled in digitally by the Contractor using the format provided by the Project Manager or using Adobe Acrobat 8 or newer. It is at the discretion of the Project Manager if other forms or formats will be accepted.

3.2 SIGNING FORMS

A. Original hand written signatures are acceptable for all documents. The Contractor is to fill out the document digitally as indicated above prior to signing the hard copy.
   1. If the form is to be submitted digitally to the Project Manager the document shall be scanned and saved as an Adobe Acrobat file.

B. Digital signatures are acceptable for all documents. The Contractor is to fill out the document digitally in the format provided by the Project Manager or Adobe Acrobat 8 or newer. The file must be signed and submitted digitally to the Project Manager.
   1. All digital signatures must contain the name of signer in plain text and the time and date the signature is executed.

PART 4 - MEASUREMENT AND PAYMENT

4.1 MEASUREMENT

A. No separate measurement shall be made for work under this Section.

4.2 PAYMENT

A. No separate payment will be made for work under this Section. The cost of the work described in this Section shall be included in the Contract price.

END OF SECTION 01 99 90

DIVISION 2 – SITE WORK

SECTION 02 41 00 DEMOLITION

PART 1 - GENERAL

1.1 RELATED DOCUMENTS

A. Contract Drawings and general provisions of the Contract, including General and Supplementary Conditions and Division 01 Specification Sections, apply to this Section.

1.2 SUMMARY

A. This Section includes the requirements for demolition and removal of:
   1. Asphalt walks, concrete slabs and curbs.
   2. Signs.
   3. Abandoned utilities.
   4. Miscellaneous site furnishings.

B. Related Sections:
   1. Division 01 Section “Temporary Facilities and Controls”.
   2. Division 01 Section “Erosion and Sedimentation Control”.
   3. Division 01 Section “Tree Protection and Retention”.
   4. Division 31 Section “Earth Moving”.

1.3 DEFINITIONS

A. Remove: Detach items from existing construction and legally dispose of them off-site unless indicated to be removed and salvaged or removed and reinstalled.

B. Remove and Salvage: Carefully detach from existing construction, in a manner to prevent damage, and deliver to the City in a condition ready for re-use.

C. Remove and Reinstall: Detach items from existing construction, prepare for reuse, and reinstall where indicated.

D. Existing to Remain: Existing items of construction that are not to be permanently removed and that are not otherwise indicated to be removed, removed and salvaged, or removed and reinstalled.

E. Recyclable Material: Material generated during demolition operations that can be reconditioned and reclaimed for the same or different use. Such materials include asphalt, concrete, metals (steel, iron, aluminum, copper, etc), rubber, glass and paper.

1.4 PROJECT CONDITIONS

A. Keep dust to a minimum at removal areas. Use water trucks as necessary.

B. Ensure safety of persons in demolition area. Provide temporary barricades as required per Division 01 Section “Temporary Facilities and Controls”.

1.5 PRE-CONSTRUCTION MEETINGS

A. Preconstruction: Inspect and discuss condition of construction to be selectively demolished.

B. Review structural load limitations of existing structure.

C. Review and finalize selective demolition schedule and verify availability of materials, demolition personnel, equipment, and facilities needed to make progress and avoid delays.

D. Review requirements of work performed by other trades that rely on substrates exposed by selective demolition operations.

E. Review areas where existing construction is to remain and requires protection.

F. Agenda Items

1.6 INFORMATIONAL SUBMITTALS

A. Proposed Protection Measures: Submit report, including drawings, that indicates the measures proposed for protecting individuals and property**,** for environmental protection, for dust control, and for noise control. Indicate proposed locations and construction of barriers.

B. Schedule of Demolition Activities: Indicate the following:
1. Detailed sequence of selective demolition and removal work, with starting and ending dates for each activity. Ensure the City's on-site operations are uninterrupted.
2. Interruption of utility services. Indicate how long utility services will be interrupted.
3. Coordination for shutoff, capping, and continuation of utility services.

C. Inventory: Submit a list of items to be removed and salvaged and deliver to the City prior to start of demolition.

D. Preconstruction Photographs or Video: Submit digital photographs or videos prior to Work commencing.

1.7 CLOSEOUT SUBMITTALS

A. Inventory:
1. Submit a list of items that have been removed and salvaged.
2. Include documentation of the type and volume/weight of materials hauled to the nearest recycling center.

B. Landfill Records: Provide records of receipt and acceptance of hazardous wastes by a landfill facility licensed to accept hazardous wastes.

PART 2 - PRODUCTS

2.1 FILL MATERIALS

A. Soils as indicated on documents, free of debris, frozen materials, roots, and other organic matter. See Division 01 Section "Earth Moving".

PART 3 - EXECUTION

3.1 PREPARATION

A. Protect structures, pavement, trails, utilities, and vegetation to remain.

B. Set up all barriers, including those for tree protection, in accordance with Division 01 Section "Temporary Facilities and Controls" and Division 01 Section "Tree Protection and Retention", prior to proceeding with any demolition.

C. Protection and Repair of Underground lines:
   1. Existing Public Utilities: Locate existing underground utilities within the limits of work per General Contract Conditions, Article 804 Protection of Municipal, Public Service or Public Utility Systems. Request utility locates seventy two (72) hours in advance of any excavations by calling the Utility Notification Center of Colorado at 811. The Contractor is responsible for providing written and graphical documentation from the utility owner. Take whatever precautions are necessary including potholing to verify location and depth to protect these underground lines from damage. Should unmarked or incorrectly marked utilities or other piping be encountered during excavation, notify the Project Manager immediately for direction. If damage does occur, all damage shall be repaired by the utility owner and all costs of such repair shall be paid by the Contractor. Only written all clears will be acceptable from utility providers or utility locate services, verbal all clears will not be accepted.
   2. Existing Private Utilities: Locate existing underground utilities within the limits of work per General Contract Conditions, Article 804 Protection of Municipal, Public Service or Public Utility Systems. The Contractor is required to contact all private utility companies including Denver City departments to locate all private utilities. The Contractor is responsible for providing written and graphical documentation from the private utility owner. The request for locates shall be a minimum of seventy two (72) prior to proceeding with any excavation. If, after such requests, private utilities are encountered and damaged by the Contractor these shall be repaired at no cost to the city. If the Contractor damages staked or located private utilities they shall be repaired by the utility owner and all costs of such repair shall be paid by the Contractor. Only written all clears will be acceptable from utility providers or utility locate services, verbal all clears will not be accepted.

3.2 DEMOLITION

A. Pavement, Slabs, and Miscellaneous Concrete Items:
   1. Remove concrete slabs-on-grade, curbs, and miscellaneous concrete items as directed. Where concrete to be removed abuts concrete to remain, pavement shall be uniformly saw-cut along an existing joint. Jagged or crooked edges will not be acceptable. Concrete shall be broken up, hauled and disposed off site, except for areas shown for remove and reinstall for recycled concrete paving. All recyclable materials shall be hauled to nearest recycling center and any non-recyclable materials shall be hauled to Denver Arapahoe Disposal Site (DADS). DADS Disposal tickets shall be provided to the Contractor by Project Manager.
   2. Remove asphalt paved roads, parking lots, walks, curbs and miscellaneous asphalt as indicated on Contract Drawings. Cuts between pavement to be removed and pavement to remain shall be saw-cut to full depth, straight, smooth and clean with no jagged edges. Asphalt shall be broken up, hauled and disposed off site. All recyclable materials shall

be hauled to nearest recycling center and any non-recyclable materials shall be hauled to DADS. DADS Disposal tickets shall be provided to the Contractor by Project Manager.

3. Remove concrete pipe sections and miscellaneous concrete items as directed.
   a. Where concrete pipe is to be removed it shall be uniformly saw-cut along an existing joint or disassembled at the joints. Jagged or crooked edges will not be acceptable. Concrete shall be broken up, hauled and disposed off site. All recyclable materials shall be hauled to nearest recycling center and any non-recyclable materials shall be hauled to DADS. DADS Disposal tickets shall be provided to the Contractor by Project Manager.
   b. When Asbestos Concrete Pipe (ACP) is determined or suspected to be present the Contractor will need to hand dig the pipe sections to be removed. Any ACP sections will need to remain intact. The use of mechanical trenching equipment within eighteen inches (18") of any known or suspected ACP will not be permitted. Once the section that is to be removed has been excavated, an abatement Contractor will remove the sections of the pipe that are to be replaced or removed and the pipe shall be flush cut. The Contractor is responsible for notifying the Project Manager of any ACP that needs to be removed forty-eight (48)-hours prior to excavation of the area. If ACP is excavated that has not be previously identified the Contractor is responsible to contact the Project Manager either verbally or by email immediately upon discovery. Any ACP that is discovered to be damaged must be immediately reported to the Project Manager. The Project Manager will then notify the Abatement Contractor of the work that needs to be performed. The Abatement Contractor has twenty four (24)-hours to respond and remove the ACP section(s).

4. Remove road base material that is exposed after removing the pavement. This material shall be hauled and disposed off site unless otherwise directed by the Project Manager. All recyclable materials shall be hauled to nearest recycling center and any non-recyclable materials shall be hauled to DADS. DADS Disposal tickets shall be provided to the Contractor by the Project Manager.

5. Remove and Reinstall Concrete Slabs for Recycled Concrete Slab Paving
   a. Remove concrete to maintain a consistent depth on salvaged slabs. If concrete has rebar reinforcing, rebar shall be cut flush with edges. Reference 'Recycled Concrete Slab Paving' detail.

B. Abandoned Utilities: Remove aboveground utilities and terminate as approved by the utility company and the Project Manager. Remove necessary portions of underground utilities to a minimum of twenty-four (24)-inches below the elevation of excavation or final grade. Cap off conduits with minimum twenty-four (24)-inch long concrete plugs.

3.3 RESTORATION

A. Backfilling: Ensure that areas to be filled are free of standing water, frost, frozen material, vegetation, including roots and debris. Place fill materials in accordance with Division 31 Section "Earth Moving".

B. Grading:
   1. Restored Areas: Grade surface to blend with original contours and provide free drainage flow. All ruts and depressions where any amount of standing water collets shall be re-graded to a smooth natural appearance to ensure positive drainage.

2. New Construction Areas: Grade as indicated in Division 31 Section “Earth Moving”.

3.4 DISPOSAL

A. Remove trash, debris and waste materials, haul and legally dispose of it off the property. All recyclable materials shall be hauled to nearest recycling center and any non-recyclable materials shall be hauled to DADS. DADS Disposal tickets shall be provided to the Contractor by the Project Manager.

B. Salvaged Material: All salvaged material remains the property of the City. Store or deliver as directed by the Project Manager.

3.5 QUALITY CONTROL

A. Comply with safety requirements for demolition, ANSI A10.6-83.

PART 4 - MEASUREMENT AND PAYMENT

4.1 MEASUREMENT

A. Measurement will be made by the contract unit specified for Demolition.

4.2 PAYMENT

A. Payment will be made at the contract unit price, and shall include required materials, transportation, equipment, labor, excavation, stockpiling, disposing, hauling off, watering, dust control, erosion and sediment control, as required in accordance with the Contract Drawings and Specifications. The price shall include sawing or otherwise effectively cutting the existing paving, curb and gutter or concrete pipe smoothly and squarely in a manner satisfactory to the Project Manager. The price shall include the removal and offsite disposal of all materials including any base course deemed unsuitable by the Project Manager. No payment will be made for the removal and/or replacement of any paving, curb and gutter or pipe sections damaged by the Contractor beyond the authorized limits of removal.

END OF SECTION 02 41 00

DIVISION 3 – CONCRETE

SECTION 03 30 00 CAST-IN-PLACE CONCRETE

PART 1 - GENERAL

1.1 RELATED DOCUMENTS

A. Contract Drawings and general provisions of the Contract, including General and Supplementary Conditions and Division 01 Specification Sections, apply to this Section.

1.2 SUMMARY

A. This Section of the Work includes furnishing, placing, shoring, bracing, and anchorage of formwork, concrete reinforcement, accessories, and placing concrete in connection with cast-in-place concrete installation including installation of control and expansion joints, concrete curing and concrete finishing

B. Related Sections:
1. Division 01 Section “Layout of Work and Surveys”
2. Division 01 Section “Submittals”.
3. Division 01 Section “Contractor Quality Control”.
4. Division 01 Section “Erosion and Sedimentation Control”.
5. Division 31 Section “Earth Moving”.
6. Division 32 Section “Aggregate Base Course”.
7. Division 32 Section “Concrete Walks, Curbs, and Miscellaneous Flatwork”.

1.3 DEFINITIONS

A. Cementitious Materials: Portland cement alone or in combination with one or more of the following: blended hydraulic cement, fly ash and other pozzolans, ground granulated blast-furnace slag, and silica fume; subject to compliance with requirements.

1.4 REFERENCES

A. Note: All references below shall be from the most current edition.

B. American Concrete Institute (ACI):
1. ACI 117 - Standard Tolerances for Concrete Construction and Materials.
2. ACI 301 - Specifications of Structural Concrete for Buildings.
3. ACI 304 - Recommended Practice for Measuring, Mixing, Transporting and Placing Concrete.
4. ACI 305 and 306 - Hot and Cold Weather Protection for Concrete.
5. ACI 315 - Details and Detailing of Concrete Reinforcement.
6. ACI 318 - Building Code Requirements for Reinforced Concrete.
7. ACI 347 - Recommended Practice for Concrete Formwork.

C. American National Standards Institute (ANSI):
1. ANSI/ASTM A82 - Cold Drawn Steel Wire for Concrete Reinforcement.
2. ANSI/ASTM A185 - Welded Steel Wire Fabric for Concrete Reinforcement.

D. American Society for Testing and Materials (ASTM):
   1. ASTM A615 - Deformed and Plain Billet-Steel for Concrete Reinforcement.
   2. ASTM C33 - Concrete Aggregates.
   3. ASTM C94 - Ready-Mixed Concrete.
   4. ASTM C150 – Portland Cement.
   5. ASTM C260 - Air Entraining Admixtures for Concrete.
   6. ASTM C309 - Liquid Membrane-Forming Compounds for Curing Concrete.
   7. ASTM C494 - Water Reducing Admixtures for Concrete.
   8. ASTM C618 - Fly Ash Mineral Admixture for Concrete.
   9. ASTM C672 - Scaling Resistance of Concrete Surfaces Exposed to Deicing Chemicals.
   10. ASTM-C800 - Curing Compound, Concrete, for New and Existing Surfaces.
   11. ASTM-C1315 - Standard Specification for Liquid Membrane-Forming Compounds Having Special Properties for Curing and Sealing Concrete

E. Concrete Reinforcing Steel Institute (CRSI) - Manual of Standard Practice.

F. Colorado Department of Transportation (CDOT) - Standard Specifications for Road and Bridge Construction.

G. National Ready Mixed Concrete Association (NRMCA)

1.5 QUALITY CONTROL

A. Reference Standards: Comply with following standards except where more stringent requirements are shown or specified:
   1. American Concrete Institute (ACI) Publications: Comply with the following unless modified by requirements in the Contract Drawings. Note: All references below shall be from the most current edition.

      a. ACI 117 - Standard Tolerances for Concrete Construction and Materials.
      b. ACI 301 - Specifications of Structural Concrete for Buildings.
      c. ACI 304 - Recommended Practice for Measuring, Mixing, Transporting and Placing Concrete.
      d. ACI 305 and 306 - Hot and Cold Weather Protection for Concrete.
      e. ACI 315 - Details and Detailing of Concrete Reinforcement.
      f. ACI 318 - Building Code Requirements for Reinforced Concrete.
      g. ACI 347 - Recommended Practice for Concrete Formwork.
      h. ANSI/ASTM A82 - Cold Drawn Steel Wire for Concrete Reinforcement.
      i. ANSI/ASTM A185 - Welded Steel Wire Fabric for Concrete Reinforcement.
      j. ACI 301, "Specifications for Structural Concrete," Sections 1 through 5.
      k. ACI 117, "Specifications for Tolerances for Concrete Construction and Materials."
      l. ASTM A615 - Deformed and Plain Billet-Steel for Concrete Reinforcement.
      m. ASTM C33 - Concrete Aggregates.
      n. ASTM C94 - Ready-Mixed Concrete.
      o. ASTM C150 - Portland Cement.
      p. ASTM C260 - Air Entraining Admixtures for Concrete.
      q. ASTM C309 - Liquid Membrane-Forming Compounds for Curing Concrete.
      r. ASTM C494 - Water Reducing Admixtures for Concrete.
      s. ASTM C618 - Fly Ash Mineral Admixture for Concrete.
      t. ASTM C672 - Scaling Resistance of Concrete Surfaces Exposed to Deicing Chemicals.

2. ASTM-C800 - Curing Compound, Concrete, for New and Existing Surfaces.
3. Concrete Reinforcing Steel Institute (CRSI) - Manual of Standard Practice.

B. Pre-Construction Conference: Conduct conference at location approved by Project Manager.

1. Before submitting design mixtures, review concrete design mixture and examine procedures for ensuring quality of concrete materials. Require representatives of each entity directly concerned with cast-in-place concrete to attend, including the following:

a. Contractor's superintendent.
b. Independent testing agency responsible for concrete design mixtures.
c. Ready-mix concrete manufacturer.
d. Concrete subcontractor.
e. Special concrete finish subcontractor.

2. Review special inspection and testing and inspecting agency procedures for field quality control, concrete finishes and finishing, cold- and hot-weather concreting procedures, curing procedures, construction contraction and isolation joints, and joint-filler strips, semi-rigid joint fillers, forms and form removal limitations, shoring and reshoring procedures, vapor-retarder installation, anchor rod and anchorage device installation tolerances, steel reinforcement installation, concrete repair procedures, and concrete protection.

C. Refer to Part 3 QUALITY CONTROL for Contractor’s testing requirements.

1.6 SUBMITTALS

A. Product Data: For each type of product specified.

B. Mix Designs:
1. Submit substantiating data for each concrete mix design specified for use to the Project Manager not less than four (4) weeks prior to first concrete placement. Data for each mix shall, as a minimum, include the following:
a. Mix identification designation (unique for each mix submitted).
b. Statement of intended use for mix.
c. Mix proportions.
d. Admixtures (must be approved by the Project Manager).
e. Wet and dry unit weight.
f. Entrained air content.
g. Design slump.
h. Strength qualification data.

C. Submit shop drawings for fabrication, bending and placement of concrete reinforcement. Comply with ACI Detailing Manual SP 66. Include all accessories specified and required to support reinforcement.

D. Qualification Data: Installer to document for Owner’s Representative experience on projects of similar scope and scale successfully completed within the past five (5) years.

E. Material Certificates: For each of the following, signed by manufacturers:

1. Cementitious materials and aggregates.
2. Admixtures.
3. Form materials and form-release agents.
4. Steel reinforcement and accessories.
5. Fiber reinforcement.
6. Waterstops.
7. Curing compounds.
8. Floor and slab treatments.
9. Bonding agents.
10. Adhesives.
11. Vapor retarders.
12. Semirigid joint filler.
13. Joint-filler strips.
14. Repair materials.
15. Epoxy joint filler.

F. Material Test Reports: For the following, from a qualified testing agency, indicating compliance with requirements:

1. Aggregates. Include service record data indicating absence of deleterious expansion of concrete due to alkali aggregate reactivity.

G. Field quality-control reports.

H. Minutes of Pre-Construction conference.

1.7 DELIVERY, STORAGE AND HANDLING

A. General: Materials handling and batching shall conform to applicable provisions of ASTM C94.

B. Reinforcing: Unload and store reinforcing bars so they are kept free of mud and damage.

C. Hauling Time for Concrete: Deliver and discharge all concrete transmitted in a truck mixer, agitator, or other transportation device not later than one and one-half (1-1/2) hours, or three-hundred (300) revolutions of the drum after the initial mixing water has been added, whichever is earliest.

D. Extra Water:
1. Deliver concrete to site in exact quantities required by design mix.
2. Should extra water be required for workability before depositing concrete, and the water/cement ratio of accepted mix design will not be exceeded, the General Contractor's superintendent shall have the sole authority to authorize addition of water. Additional water shall not exceed one (1) gal/cu. yd. Any additional water added to mix after leaving batch plant shall be indicated on truck ticket and signed by person responsible.
3. Where extra water is added to concrete it shall be mixed thoroughly for thirty (30) revolutions of drum before depositing.
4. Water may be added at the site only once for each batch.
5. A full set of tests shall be performed after addition of water. Excessive slump or other out of range tests will be cause for rejection.

1.8 PROJECT CONDITIONS

A. Environmental Requirements:
   1. Cold Weather Placement:
      a. When for three successive days prior to concrete placement the average daily outdoor temperature drops below forty degree (40°) F or when the average outdoor temperature is expected to drop below forty degrees forty degree (40°) F on the day of concrete placement, preparation, protection and curing of concrete shall comply with ACI 306R.
      b. Minimum temperature of concrete upon delivery shall conform to ACI 301 Table 7.6.1.1. Concrete at time of placement shall conform to minimum values of ACI 306R Table 1.4.1, and shall not exceed minimum values by more than twenty degrees (20°) F.
      c. Subject to acceptance of the Project Manager an accelerating admixture may be used. Admixtures shall meet requirements of Part 2. Calcium Chloride and other chloride-type accelerating admixtures are not allowed.
      d. Comply with concrete protection temperature requirements of ACI 306R. Record concrete temperatures during specified protection period at intervals not to exceed sixteen (16) hours and no less than twice during any twenty four (24) hour period.

   2. Hot Weather Placement:
      a. When depositing concrete in hot weather, follow recommendations of ACI 305R.
      b. Temperature of concrete at time of placement shall not exceed eighty-five degrees (85°) F.
      c. When air temperatures on day of placement are expected to exceed ninety degrees (90°) F, mix ingredients shall be cooled before mixing. Flake ice or well-crushed ice of a size that will melt completely during mixing may be substituted for all or part of mix water.
      d. Retarding admixture may be used subject to acceptance of the Project Manager. Admixtures shall meet requirements of Part 2.
      e. Protect to prevent rapid drying. Start finishing and curing as soon as possible.

B. Protection: Protect newly finished slabs from vandalism and all weather related damage. Protect finished slabs from mortar leakage from pouring of concrete above. Cover masonry walls, glazing, and other finish materials with polyethylene or otherwise protect from damage due to pouring of concrete.

PART 2 - PRODUCTS

2.1 FORM MATERIALS

A. Hand Placed Steel Forms: Hand placed steel forms are only to be used for sections that are straight and have no bend, radii, or curvature in the sections to be used.

B. Plywood Forms: Are to be used on any section of concrete that have bends, radii or curvature. Forms shall be made of Douglas Fir or Spruce species; solid one side grade; sound, undamaged sheets with straight edges.
   1. Curved elements shown on plans are to be constructed with smooth-curved forms. Faceted forms composed of straight sections will not be accepted.

C. Lumber: Douglas Fir or Spruce species; construction grade; with grade stamp clearly visible.

D. Form Coatings: Provide commercial formulation form coating compounds that will not bond with, stain, or adversely affect concrete surfaces and will not impair subsequent treatments of concrete surfaces.

2.2 REINFORCING STEEL

A. Reinforcing Steel: ASTM A615, grade forty (40) for, ties and stirrups; grade sixty (60) for all other bar; billet-steel deformed bars, uncoated finish.

B. Tie Wire: ASTM A82, minimum sixteen (16) gauge annealed type.

C. Chairs, Bolsters, Bar Supports, and Spacers: Sized and shaped for strength and support of reinforcement during installation and placement of concrete. Wood, brick or other unacceptable material is not permitted.

2.3 REINFORCEMENT ACCESSORIES

A. Joint Dowel Bars: ASTM A 615/A 615M, Grade sixty (60), plain-steel bars, cut true to length with ends square and free of burrs.

B. Bar Supports: Bolsters, chairs, spacers, and other devices for spacing, supporting, and fastening reinforcing bars and welded wire reinforcement in place. Manufacture bar supports from steel wire, plastic, or precast concrete according to CRSI's "Manual of Standard Practice," of greater compressive strength than concrete and as follows:

1. For concrete surfaces exposed to view where legs of wire bar supports contact forms, use CRSI Class one (1) plastic-protected steel wire or CRSI Class two (2) stainless-steel bar supports.
2. For epoxy-coated reinforcement, use epoxy-coated or other dielectric-polymer-coated wire bar supports.
3. For zinc-coated reinforcement, use galvanized wire or dielectric-polymer-coated wire bar supports.

2.4 CONCRETE MATERIALS

A. Provide materials in accordance with ACI 301, unless amended or superseded by requirements of this section or general notes on structural drawings.
1. General: Ready-mixed Concrete: ASTM C94. On-site mixed concrete not allowed.
2. Cement: ASTM C150. Type II
3. Fly ash: ASTM C618 Class C or F.
4. Aggregate: ASTM C33.
   a. Obtain from same source throughout project.
   b. All sand and aggregates to meet C-33 Table 3 for Class 4S “Severe Weathering Region”.
      1) Fine Aggregate: Clean, natural sand.
      2) Coarse Aggregate: Clean gravel or crushed stone.

5. Water: ASTM C 94/C 94M, clean and not detrimental to concrete.

2.5 ADMIXTURES

A. General: Unless specified, no admixtures may be used without specific approval of the Project Manager.

B. Prohibited Products: Calcium chloride or admixtures containing more than one half of one percent (0.05%) chloride ions or thiocyanates are not permitted.

C. Color Admixture: Color Pigment: ASTM C 979, synthetic mineral-oxide pigments or colored water-reducing admixtures; color stable, nonfading, and resistant to lime and other alkalis.

1. Manufacturers: Subject to compliance with requirements, provide products by one of the following:

a. ChemMasters.
b. Davis Colors.
c. Dayton Superior Corporation.
d. Hoover Color Corporation.
e. Lambert Corporation.
f. QC Construction Products.
g. Rockwood Pigments NA, Inc.
h. Scofield, L. M. Company.
i. Solomon Colors, Inc.
j. Acceptable substitution.

2. Color: Match Architect's sample.

D. Air-Entraining Admixture: ASTM C260. Subject to compliance with requirements, provide one of the following:
1. “Air Mix” by Euclid Chemical Co.
2. “Darex ARA” by W. R. Grace.
3. “Micro-Air” by Master Builders.
4. Acceptable substitution.

E. Water Reducing Admixture: ASTM C494, Type A. Subject to compliance with requirements, provide one of the following:
1. “Eucon WR-75” by Euclid Chemical Co.
2. “Rheobuild 1000” by Master Builders.
3. “Plastocrete 106” by Sika Chemical Co.
4. Acceptable substitution.

F. High Range Water Reducing Admixture (Superplasticizer): ASTM C494, Type F or G. Subject to compliance with requirements, provide one of the following:
1. “Eucon 37” by Euclid Chemical Co.
2. “Pozzolith 400N” by Master Builders.
3. “Sikament” by Sika Chemical Co.
4. Acceptable substitution.

G. Warm Weather Admixtures: ASTM C494. Use of admixtures will not relax warm weather placement requirements.

H. Cold Weather Admixtures: ASTM C494. Use of admixtures will not relax cold weather placement requirements.

2.6 ACCESSORIES

A. Form Release Agent: Colorless material which will not stain concrete, absorb moisture, contain oils or waxes, or impair natural bonding or color characteristics of coating intended for use on concrete. Subject to compliance with requirements, use one of the following:
1. "Pro-Cote" by Protex.
2. "Cast Off" by Sonneborn.
3. "Debond" by L&M Construction Chemicals.

B. Epoxy Adhesive: ASTM C881; two (2)-component material suitable for use on dry or damp surfaces. Subject to compliance with requirements, use one of the following:
1. "Sikadur Hi-Mod LV" by Sika Chemical Corp.
2. "Patch and Bond Epoxy" by Burke.
3. "Epoxtite" by A.C. Horn.
4. "Sure-Poxy" by Kaufman Products, Inc.
5. "Euco Epoxy 463 or 615" by Euclid Chemical Co.

C. Expansion Joints:
1. Interior Use or Exterior Use Where Sealants are Specified: Bituminous saturated fiber conforming to ASTM D1751, one half inch (1/2") thick. Provide manufacturer's certification of compatibility with specified sealants where required.
2. Exterior Use Where Sealants are not Specified: Premolded asphalt and fiber conforming to ASTM D994, one half inch (1/2") thick.

D. Slip Joints:
1. Speed Dowel Model PSD09/#4TX, nine inch (9") long sleeve to accommodate eighteen inch (18") smooth steel round bar. Manufactured by Sika/Greenstreak, (800)325-9504.
2. Dowel, eighteen inch (18") long smooth round steel bar, five eighth inch (5/8") diameter. De-bur cut ends.

E. Void Forms: Biodegradable paper surface, treated for moisture resistance, structurally sufficient to support weight of plastic concrete and other superimposed loads.

F. Chamfer Strips: Wood, metal, PVC, or rubber strips, shaped as sized on the drawings.

G. Rustication Strips: Wood, metal, PVC, or rubber strips, kerfed for ease of form removal.

H. Form-Release Agent: Commercially formulated form-release agent that will not bond with, stain, or adversely affect concrete surfaces and will not impair subsequent treatments of concrete surfaces.

1. Formulate form-release agent with rust inhibitor for steel form-facing materials. Form-release agent is not to stain or discolor final concrete surface.

I. Form Ties: Factory-fabricated, removable or snap-off metal or glass-fiber-reinforced plastic form ties designed to resist lateral pressure of fresh concrete on forms and to prevent spalling of concrete surface.

1. Furnish units that will leave no corrodible metal closer than 1 inch (1”) to the plane of exposed concrete surface, or as shown on the drawings.
2. Furnish ties that, when removed, will leave holes no larger than 1 inch (1”) in diameter in concrete surface.
3. Furnish ties with integral water-barrier plates to walls indicated to receive dampproofing or waterproofing.

J. Spray Curing Compound: All spray curing compound shall meet ASTM C-1315, and be prepared by manufacturer’s instructions. Use per where required in Section 3.9.

2.7 CONCRETE MIX

A. Refer to the City and County of Denver Right of Way Services approved materials list of pre-approved concrete mixes at the following website:

https://www.denvergov.org/content/denvergov/en/right-of-way-services/engineering-regulatory-analytics/engineering-plan-review/manuals-regulations.html

B. All Concrete mixes from the approved list or submitted for approval shall meet the following criteria:

1. Mix concrete in accordance with ASTM C94 and ACI 301 Chapter 3.
2. Cement Content: Type II cement, minimum of five hundred sixty four (564) pounds per cubic yard.
3. Fly ash: ASTM C618 Class C or F. Fly ash shall not exceed fifteen (15%) of total cementitious material by weight unless approved by Project Manager.
4. Maximum water-cement ratio: 0.45.
5. Slump: Four inches (4”) maximum.
6. Air Entrainment: Five percent (5%) to eight percent (8%).
7. Aggregate Size: three quarter inch (3/4”), maximum.
8. Deliver concrete and discharge all concrete transmitted in a truck mixer, agitator, or other transportation device not later than one and one-half (1-1/2) hours from batch time, or three hundred (300) revolutions of the drum after the initial mixing water has been added, whichever is earliest.
9. During cold weather (below forty-five degree (45°) F), use heated water and aggregates if necessary to maintain concrete temperature between sixty degree (60°) F. and ninety degree (90°) F.
10. Concrete for Footings, Walls, and Interior Slabs-on-Grade shall be Class B or Class D, as approved by the Project Manager.
11. Fly Ash: Per CDOT Standard Specifications for Road and Bridge Construction Section 701.02.

2.8 FABRICATING REINFORCEMENT

A. Fabricate steel reinforcement according to CRSI's "Manual of Standard Practice."

2.9 CONCRETE MIXING

A. Ready-Mixed Concrete: Measure, batch, mix, and deliver concrete according to ASTM C 94/C 94M and ASTM C 1116/C 1116M, and furnish batch ticket information.

1. When air temperature is between eighty-five (85°) and ninety degrees (90°) F, reduce mixing and delivery time from one and one-half (1-1/2) hours to seventy-five (75) minutes; when air temperature is above ninety degrees (90°) F, reduce mixing and delivery time to sixty (60) minutes.

2. Project-Site Mixing: Not allowed without prior approval from Project Manager. If allowed, submit process description to Project Manager for approval prior to construction.

PART 3 - EXECUTION

3.1 QUALITY CONTROL

A. Requirements of Regulatory Agencies: Comply with all applicable provisions of the state and local building and safety codes.

B. Source Limitations: Obtain each type or class of cementitious material of the same brand from the same manufacturer's plant, obtain aggregate from single source, and obtain admixtures from single source from single manufacturer, unless otherwise approved by Project Manager.

C. Ready-Mix-Concrete Manufacturer Qualifications: A firm experienced in manufacturing ready-mixed concrete products and that complies with ASTM C 94/C 94M requirements for production facilities and equipment.
1. Manufacturer certified according to NRMCA's "Certification of Ready Mixed Concrete Production Facilities" (Quality Control Manual - Section 3, "Plant Certification Checklist").

D. Testing: All testing shall be completed by the Contractor at their expense unless otherwise specified by the contract.

E. Testing Agency Qualifications: Engage a qualified testing agency to perform material evaluation tests and to design concrete mixtures. Qualified according to ASTM C 1077 and ASTM E 329 for testing indicated.
1. Personnel conducting field tests shall be qualified as ACI Concrete Field Testing Technician, Grade 1, according to ACI CP-1 or an equivalent certification program.

F. Testing Frequency: Obtain at least one composite sample for each one hundred (100) cubic yards, or fraction thereof of each concrete mixture placed each day.
a. When frequency of testing will provide fewer than five (5) compressive-strength tests for each concrete mixture, testing shall be conducted from at least five (5) randomly selected batches or from each batch if fewer than five (5) are used.
2. Slump: ASTM C 143/C 143M; one test at point of placement for each composite sample, but not less than one (1) test for each day's pour of each concrete mixture. Perform additional tests when concrete consistency appears to change.

3. Air Content: ASTM C 231, pressure method; one test for each composite sample, but not less than one test for each day's pour of each concrete mixture.
4. Compression Test Specimens: ASTM C 31/C 31M; cast and laboratory cure one (1) set of four (4) standard cylinder specimens for each composite sample.
5. Compressive-Strength Tests: ASTM C 39/C 39M; test one specimen at seven days and two specimens at twenty-eight (28) days. and keep one for backup in the event a sample should break.
    a. A compressive-strength test shall be the average compressive strength from two specimens obtained from same composite sample and tested at twenty-eight (28) days.

G. Strength of each concrete mixture will be satisfactory if average of any three consecutive compressive-strength tests equals or exceeds specified compressive strength and no compressive-strength test value falls below specified compressive strength by more than two-hundred (200) psi.

H. Test results shall be reported in writing to Project Manager, concrete manufacturer, and Contractor within forty-eight (48) hours of testing. Reports of compressive-strength tests shall contain Project identification name and number, date of concrete placement, name of concrete testing and inspecting agency, location of concrete batch in Work, design compressive strength at twenty-eight (28) days, concrete mixture proportions and materials, compressive breaking strength, and type of break for both seven (7) and twenty-eight (28) day tests.

I. Additional Tests: Testing and inspecting agency shall make additional tests of concrete when test results indicate that slump, air entrainment, compressive strengths, or other requirements have not been met, as directed by Project Manager.

J. Concrete work will be considered defective if it does not pass tests and inspections.

K. Additional testing and inspecting, at Contractor's expense, will be performed to determine compliance of replaced or additional work with specified requirements.

L. Prepare test and inspection reports.

M. Record of Work: A record shall be kept by the Contractor listing the time and date of placement of all concrete for the structure. Such record shall be kept until the completion of the project and shall be available to the Project Manager for examination at any time.

N. Mockups: If requested by the Project Manager, prior to starting any concrete work, provide a sample panel using materials indicated for project work. For each type, color and finish of concrete specified, build panel at the site of full thickness and approximately ten feet (10') by 10 feet (10'), including reinforcement, expansion joints, control joint, scales, fillers, and one radial edge. Provide the workmanship proposed for the work. Correct and replace sample panel until Project Manager's acceptance of the work. Retain panel(s) during construction as a standard for completed paving work.
1. Build panel approximately one-hundred (100) sq. ft. in the location indicated or, if not indicated, as directed by Project Manager.
2. Approved mockups may become part of the completed Work if approved prior to the construction of the mock up and is undisturbed at time of Substantial Completion.
3. Notify the Project Manager a minimum of seven (7) days in advance of dates and times when mockups will be constructed.

4. Obtain the Project Manager's written approval of the mockups before starting construction.
5. If the Project Manager determines that the mockup does not meet the requirements, demolish and remove from the site and cast another until the mockup is approved.
6. Maintain the mockups during construction in an undisturbed condition as a standard for judging the completed Work.
7. Demolish and remove mockups when directed by Project Manager.

O. Review special inspection and testing and inspecting agency procedures for field quality control, concrete finishes and finishing, cold and hot-weather concreting procedures, curing procedures, construction contraction and isolation joints, and joint-filler strips, semi-rigid joint fillers, forms and form removal limitations, shoring and reshoring procedures, vapor-retarder installation, anchor rod and anchorage device installation tolerances, steel reinforcement installation, concrete repair procedures, and concrete protection.

3.2 FORMWORK ERECTION

A. Construct formwork to maintain tolerances in accordance with ACI 301.

B. Verify lines, levels, and measurement before proceeding with formwork.

C. Limit concrete surface irregularities, designated by ACI 347 as abrupt or gradual, as follows:

1. Class A, one eighth inch (1/8”) for smooth-formed finished surfaces.
2. Class B, one-quarter inch (1/4”) for rough-formed finished surfaces.

D. Construct formwork so concrete members and structures are of size, shape, alignment, elevation, and position indicated, within tolerance limits of ACI 117.

E. Form Tie Holes: Form tie holes are to be filled with grout and finished to match adjacent concrete surface.

F. Elements shown as curved on plans are to be formed with flexible form material to form smooth curve transitions. Disjointed, poorly transitioned form alignments will not be accepted. Curved sections formed with straight facets will not be accepted.

G. Contractor shall notify the Project Manager a minimum of forty eight (48) hours in advance of placing concrete for review of formwork. Contractor shall make correction within twenty four (24) hours of review. If formwork is not in place at time of the scheduled inspection, then the Contractor will be responsible for compensation of the Project Manager’s time and expenses per the General Contract Conditions.

H. Minimize form joints. Symmetrically align form joints and make watertight to prevent leakage of mortar.

I. Provide chamfer strips on all exposed corners or as indicated on construction documents.

J. Do not apply form release agent other than specified materials where concrete surfaces receive special finishes or applied coatings which may be affected by agent. Soak contact surfaces of untreated forms with clean water. Keep surfaces wet prior to placing concrete.

K. Coordinate work of other Sections in forming and setting openings, slots, recesses, chases, sleeves, bolts, dowels, anchors, and other inserts and embedded materials.

L. Do not remove forms, shoring and bracing until concrete has sufficient strength to support its own weight, and construction and design loads which may be imposed upon it.

M. During cold weather, remove ice and snow from forms. **Do not** use deicing salts. Do not use water to clean out completed forms unless formwork and construction proceed within heated enclosure. Use compressed air to remove foreign matter.

3.3 REMOVING AND REUSING FORMS

A. General: Formwork for sides of beams, walls, columns, and similar parts of the Work that does not support weight of concrete may be removed after cumulatively curing at not less than fifty degrees (50°) F for twenty four (24) hours after placing concrete. Concrete has to be hard enough to not be damaged by form-removal operations and curing and protection operations need to be maintained.

1. Leave formwork for structural elements that supports weight of concrete in place until concrete has achieved at least seventy percent (70%) of its twenty-eight (28) day design compressive strength.
2. Remove forms only if shores have been arranged to permit removal of forms without loosening or disturbing shores.

B. Clean and repair surfaces of forms to be reused in the Work. Split, frayed, delaminated, or otherwise damaged form-facing material will not be acceptable for exposed surfaces. Apply new form-release agent.

C. When forms are reused, clean surfaces, remove fins and laitance, and tighten to close joints. Align and secure joints to avoid offsets. Do not use patched forms for exposed concrete surfaces unless approved by Project Manager.

3.4 SHORES AND RESHORES

A. Comply with ACI 318 (ACI 318M) and ACI 301 for design, installation, and removal of shoring and reshoring.

1. Do not remove shoring or reshoring until measurement of slab tolerances is complete.

B. Plan sequence of removal of shores and reshore to avoid damage to concrete. Locate and provide adequate reshoring to support construction without excessive stress or deflection.

3.5 EMBEDDED ITEMS

A. Place and secure anchorage devices and other embedded items required for adjoining work that is attached to or supported by cast-in-place concrete. Use setting drawings, templates, diagrams, instructions, and directions furnished with items to be embedded.

1. Install anchor rods, accurately located, to elevations required and complying with tolerances in Section 7.5 of AISC's "Code of Standard Practice for Steel Buildings and Bridges."

3.6 REINFORCEMENT

A. Place, support, and secure reinforcement against displacement.

B. Locate reinforcing splices per ACI 318 unless indicated otherwise on the Contract Drawings.

3.7 JOINTS

A. General: Construct joints true to line with faces perpendicular to surface plane of concrete.

B. Construction Joints: Install so strength and appearance of concrete are not impaired, at locations indicated or as approved by Project Manager.

1. Place joints perpendicular to main reinforcement. Continue reinforcement across construction joints unless otherwise indicated. Do not continue reinforcement through sides of strip placements of floors and slabs.
1. Use a bonding agent at locations where fresh concrete is placed against hardened or partially hardened concrete surfaces.
2. Use epoxy-bonding adhesive at locations where fresh concrete is placed against hardened or partially hardened concrete surfaces.

D. Joint Sealants: See Division 3 Section “Concrete Paving Joint Sealants”.

3.8 CONCRETE PLACEMENT

A. Contractor’s Review: Contractor shall inspect forms and reinforcing prior to concrete placement to assure accurate placement of embedded items and overall acceptability.

B. Project Manager’s Review: Contractor shall provide minimum of forty-eight (48) hours notice to the Project Manager to allow review of forms and reinforcement before concrete is placed and to observe placing of concrete.

C. Before placing concrete, verify that installation of formwork, reinforcement, and embedded items is complete and that required inspections have been performed.

D. Do not add water to concrete during delivery, at Project site, or during placement. Deposit concrete continuously in one layer or in horizontal layers of such thickness that no new concrete will be placed on concrete that has hardened enough to cause seams or planes of weakness. If a section cannot be placed continuously, provide construction joints as indicated. Deposit concrete to avoid segregation.

1. Deposit concrete in horizontal layers of depth to not exceed formwork design pressures and in a manner to avoid inclined construction joints.
2. Consolidate placed concrete with mechanical vibrating equipment according to ACI 301.
3. Do not use vibrators to transport concrete inside forms. Insert and withdraw vibrators vertically at uniformly spaced locations to rapidly penetrate placed layer and at least six

inches (6”) into preceding layer. Do not insert vibrators into lower layers of concrete that have begun to lose plasticity. At each insertion, limit duration of vibration to time necessary to consolidate concrete and complete embedment of reinforcement and other embedded items without causing mixture constituents to segregate.

E. Deposit and consolidate concrete for concrete pavements in a continuous operation, within limits of construction joints, until placement of a panel or section is complete.

1. Consolidate concrete during placement operations so concrete is thoroughly worked around reinforcement and other embedded items and into corners.
2. Maintain reinforcement in position on chairs during concrete placement.
3. Screed slab surfaces with a straightedge and strike off to correct elevations.
4. Slope surfaces as indicated on drawings.
5. Begin initial floating using bull floats or darbies to form a uniform and open-textured surface plane, before excess bleedwater appears on the surface. Do not further disturb slab surfaces before starting finishing operations.
6. Allow time for bleed water to appear, then scrape or push off all bleed water. Do not work water into surface.
7. Final level, light bull float, but do not trowel surface.
8. Broom or drag surface or other specified finish, per Subsection 3.8 this Section.
9. Do not use evaporative retarders as finishing aid.

F. Cold-Weather Placement: Comply with ACI 301, ACI 304, ACI 306R and as follows. Protect concrete work from physical damage or reduced strength that could be caused by frost, freezing actions, or low temperatures.

1. When average high and low temperature is expected to fall below forty degrees (40°) F for three successive days, maintain delivered concrete mixture temperature within the temperature range required by ACI 301.
2. Do not use frozen materials or materials containing ice or snow. Do not place concrete on frozen subgrade or on subgrade containing frozen materials.
3. Do not use calcium chloride, salt, or other materials containing antifreeze agents or chemical accelerators unless otherwise specified and approved in mixture designs.

G. Hot-Weather Placement: Comply with ACI 301, ACI 304, ACI 305R, and as follows:

1. Maintain concrete temperature below ninety degrees (90°) F at time of placement. Chilled mixing water or chopped ice may be used to control temperature, provided water equivalent of ice is calculated to total amount of mixing water. Using liquid nitrogen to cool concrete is prohibited.
2. Spray forms, steel reinforcement, and subgrade just before placing concrete. Keep subgrade uniformly moist without standing water, soft spots, or dry areas.

H. Ensure reinforcement, inserts, embedded parts and formed joints are not disturbed during concrete placement.

3.9 FINISHING

A. Rough Form Finish: All texture imparted by form facing material, including tie holes and defective areas, shall be repaired and patched, and all fins and other projections exceeding one-quarter inch (1/4”) shall be removed.

B. Related Unformed Surfaces: At tops of walls, horizontal offsets, and similar unformed surfaces adjacent to formed surfaces, strike off smooth and finish with a texture matching adjacent formed surfaces. Continue final surface treatment of formed surfaces uniformly across adjacent unformed surfaces unless otherwise indicated.

3.10 CONCRETE CURING, PROTECTION, AND SURFACE TREATMENTS

A. General:
1. Protect freshly placed concrete from premature drying and excessive cold or hot temperatures. Maintain concrete with minimal moisture loss at a relatively constant temperature for the period necessary for hydration of the cement and hardening of concrete.
2. Curing shall commence as soon as free water has disappeared from the concrete surface after placing and finishing. The curing period shall be seven days for all concrete unless test cylinders, made and kept adjacent to the structure and cured by the same methods, are tested with the average compressive strength equal to seventy percent (70%) of the specified twenty-eight (28) day strength.
3. Curing shall be in accordance with ACI 301 procedures. Avoid rapid drying at the end of the curing period. During hot and cold weather, cure concrete in accordance with ACI 305R and ACI 306R.

B. Curing Methods: Perform curing of concrete by moisture curing, by moisture-retaining cover curing, by curing compound, and by combinations thereof, as herein specified and in accordance with ACI 308.1. Coordinate with and choose a curing method that is compatible with the requirements for subsequent material usage on the concrete surface.

1. Provide moisture retaining cover curing as follows: Cover concrete surfaces with a moisture-retaining cover for curing concrete, placed in widest practical width with sides and ends lapped at least three inches (3”) and sealed by waterproof tape or adhesive. Immediately repair any holes or tears during curing period using cover material and waterproof tape.
2. Provide curing and sealing compound to interior slabs left exposed, and to exterior slabs, walks and curbs as follows:
    a. Apply specified curing and sealing compound to concrete slabs as soon as final finishing operations are complete (within thirty (30) minutes). Apply uniformly in continuous operation by power-spray or roller in accordance with manufacturer’s directions. Recoat areas subjected to rainfall within three hours after initial application.
    b. Maintain continuity of coating and repair damage during period.
    c. Do not use membrane curing compounds on surfaces which are to be covered with materials applied directly to concrete: liquid floor hardener, waterproofing, dampproofing, painting, and other coating and finish materials.

C. Curing Formed Surfaces: Where wooden forms are used, cure formed concrete surfaces by moist curing with forms in place for full curing period or until forms are removed. When forms are removed, continue curing by methods specified above for specified curing time.

D. Curing Unformed Surfaces:
1. Cure unformed surfaces, such as slabs, floor topping, and other flat surfaces by application of appropriate curing method.

3.11 FORM REMOVAL

A. Removal of Forms: Supplement and Modify ACI 301 as follows:
   1. ACI 301 4.5.4: Formwork not supporting weight of concrete such as sides of grade beams, walls, and similar parts of the work, may be removed after cumulatively curing at not less than fifty degrees (50°) F for twenty-four (24) hours after placing the concrete provided:
      a. The concrete is sufficiently cured to be undamaged by form removal.
      b. Required shores and supports are so arranged that they will not be loosened or disturbed during form removal.
      c. Supplemental curing and protection is provided for exposed concrete surfaces.

3.12 TOLERANCES

A. Formed Surfaces and Building Lines: Conform to ACI 301 4.3.

B. Slab Finishing Tolerances: See Division 32 Section “Concrete Walks, Curbs, and Miscellaneous Flatwork”.

C. Embedded Items: Unless noted otherwise on drawings, tolerances shall be as follows:
   1. Anchor Bolts:
      a. Adjacent anchor bolts in a group receiving a single fabricated setting piece: Plus or minus one-eighth inch (1/8”).
      b. Location and alignment of anchor bolt groups from designated location and alignment: Plus or minus one-eighth inch (1/8”).

3.13 CONCRETE SURFACE REPAIRS

A. Defective Concrete: Repair and patch defective areas when approved by Project Manager. Remove and replace concrete that cannot be repaired and patched to Project Manager's approval.

B. Patching Mortar: Mix dry-pack patching mortar, consisting of one part portland cement to two and one-half parts fine aggregate passing a Number sixteen (#16) sieve, using only enough water for handling and placing. Achieve approval of Project Manager prior to any patching as to location of patches and patch material.

C. Patch Testing: On a portion of the work which will, in the finished condition, be concealed, test patch materials and methods and obtain Project Manager’s approval prior to patching concrete surfaces needing repair that will be visible in the final construction.

D. Repairing Formed Surfaces: Surface defects include color and texture irregularities, cracks, spalls, air bubbles, honeycombs, rock pockets, fins and other projections on the surface, and stains and other discolorations that cannot be removed by cleaning.

   1. Immediately after form removal, cut out honeycombs, rock pockets, and voids more than one half inch (1/2”) in any dimension to solid concrete. Limit cut depth to three quarter inch (3/4”). Make edges of cuts perpendicular to concrete surface. Clean, dampen with water, and brush-coat holes and voids with bonding agent. Fill and compact with

patching mortar before bonding agent has dried. Fill form-tie voids with patching mortar or cone plugs secured in place with bonding agent.

2. Repair defects on surfaces exposed to view by blending white portland cement and standard portland cement so that, when dry, patching mortar will match surrounding color and texture. Patch a test area at inconspicuous locations to verify mixture and color match before proceeding with patching. Compact mortar in place and strike off slightly higher than surrounding surface.
3. Repair defects on concealed formed surfaces that affect concrete's durability and structural performance as determined by Project Manager.

E. Repairing Unformed Surfaces: Test unformed surfaces, such tops of walls, for finish and verify surface tolerances specified for each surface. Correct low and high areas. Test surfaces sloped for trueness of slope and smoothness; use a sloped template.

1. After obtaining approval of Project Manager, repair finished surfaces containing defects. Surface defects include spalls, popouts, honeycombs, rock pockets, crazing and cracks in excess of one-one hundredths inch (0.01”) wide or that penetrate to reinforcement or completely through unreinforced sections regardless of width, and other objectionable conditions.
   a. If, after repairs are complete, the Project Manager deems the repairs did not successfully correct the original deficiencies, the pavement or concrete element in question is to be removed and replaced per Subsection 3.13.E.1. above.

2. After concrete has cured at least fourteen (14) days, test for low and high spots in finished surface. Areas that do not conform to the tolerances set forth in Division 32 and in other reference standards identified in this specification are to be sawcut to the nearest joint as approved by the Project Manager, defective concrete removed, and new conforming paving reinstalled. Color and finish is to match adjacent concrete.
3. If approved by Project Manager, repair random cracks and single holes one inch (1”) or less in diameter with patching mortar. Groove top of cracks and cut out holes to sound concrete and clean off dust, dirt, and loose particles. Dampen cleaned concrete surfaces and apply bonding agent. Place patching mortar before bonding agent has dried. Compact patching mortar and finish to match adjacent concrete. Keep patched area continuously moist for at least seventy-two (72) hours.

F. Perform structural repairs of concrete, subject to Project Manager’s approval, using epoxy adhesive and patching mortar.

G. Repair materials and installation not specified above may be used, subject to Project Manager approval.

PART 4 - MEASUREMENT AND PAYMENT

4.1 MEASUREMENT

A. Measurement will be made by the contract unit specified for Cast-in-Place Concrete.

4.2 PAYMENT

A. Payment will be made at the contact unit price, and shall include required materials, transportation, equipment, labor, excavation, stockpiling, disposing, hauling off, watering, dust control, erosion and sediment control, compaction, sub-grade preparation, formwork, placing of concrete, reinforcing, joints, curing, finishing and all other items required to complete the work as required in accordance with the Contract Drawings and Specifications.

END OF SECTION 03 30 00

PART 1: GENERAL

1.0 RELATED DOCUMENTS: The General Contract Conditions, Drawings and other Division - 1 Specification sections apply to Work of this section.

1.1 DESCRIPTION: The work of this section consists of furnishing and placing Portland cement structural concrete to construct reinforced concrete elements identified in the contract plans and in conformity with the lines, grades, and dimensions shown on the plans or established.

1.2 PROJECT CONDITIONS

A. Concrete for retaining walls, terraces, stairs, reinforced concrete footings, and all other reinforced concrete shall conform to the requirements stated for Structural Concrete.

PART 2 - MATERIALS

2.1 CONCRETE CLASSIFICATION: Structural Concrete shall conform to the structural notes on the plans and the following:

A. All concrete is normal weight, air entrained concrete for general use. Required Field Compressive Strength should be 4,000 psi. Air Content should be in the range of 5 to 8% (total). Water Cementitious Ration should be 0.45 maximum. The coarse aggregate shall have a nominal maximum size of 1½ inches or smaller.

B. The laboratory trial mix must not exhibit a crack at or before 14 days in the cracking tendency test (AASHTO T334)

2.2 HYDRAULIC CEMENT: Hydraulic cement shall conform to the requirements of the following specifications for the type specified or permitted:

Type Specification

(1) Masonry Cement ASTM C 91

(2) Portland Cement ASTM C 150

(3) Blended Hydraulic Cement ASTM C 595

(4) Hydraulic Cement ASTM C 1157

A. All structural concrete shall be constructed with one of the following hydraulic cements unless permitted otherwise.

(1) ASTM C 150 Type I

(2) ASTM C 150 Type II

(3) ASTM C 150 Type V

(4) ASTM C 595 Type IP consisting of no less than 70 percent portland cement,

(5) ASTM C 595 Type IP(MS) consisting of no less than 70 percent portland cement,

(6) ASTM C 595 Type IP(HS) consisting of no less than 70 percent portland cement,

(7) ASTM C 1157 Type GU, consisting of no more than 10 percent limestone,

(8) ASTM C 1157 Type MS, consisting of no more than 10 percent limestone,

B. Cement shall be from a preapproved source listed on the Colorado Department of Transportation's Approved Products List. The cement intended for use on the project shall have been tested and accepted prior to its use. Certified Test Reports showing that the cement meets the specification requirements and supporting this statement with actual test results shall be submitted to the Engineer prior to the tested material being incorporated into the project. Certified Test Reports shall indicate the percentage of pozzolan and/or limestone incorporated into the cement.

C. The cement shall be subject to sampling and testing by the Engineer. Test results that do not meet the physical and chemical requirements may result in the suspension of the use of the cement until the corrections necessary have been taken to insure that the material meets the specifications.

D. The Contractor shall provide suitable means for storing and protecting the cement against dampness. Cement which, for any reason, has become partially set or which contains lumps of caked cement shall not be used.

E. Cement salvaged from discarded or used bags shall not be used.

2.3 FLY ASH:

A. Fly ash for concrete shall conform to the requirements of ASTM C 618, Class C or Class F with the following exceptions:

(1) The loss on ignition shall not exceed 3.0 percent.

(2) The CaO in Class F fly ash shall not exceed 18 percent.

B. Fly ash shall be from a preapproved source listed on the Colorado Department of Transportation's Approved Products List. The fly ash intended for use on the project shall have been tested and accepted prior to its use. Certified Test Reports showing that the fly ash meets the specification requirements and supporting this statement with actual test results shall be submitted to the Engineer.

C. Preapproval shall include submission of a report from the supplier documenting the results of testing the fly ash from that source in accordance with the Toxicity Characteristic Leaching Procedure (TCLP) described in 40 CFR 261, Appendix II. The report shall include the results of TCLP testing for heavy metals and other contaminants found in the fly ash. The report shall list the contaminants tested, and the allowable levels

for each contaminant tested. A new report shall be submitted for each preapproved source annually. Additional TCLP testing may be required when the Department suspects that the fly ash source may have been contaminated.

D. The fly ash shall be subject to sampling and testing by the Department. Test results that do not meet the physical and chemical requirements may result in the suspension of the use of fly ash until the corrections necessary have been taken to insure that the material meets the specifications

2.4 SILICA FUME: Silica fume for concrete shall conform to the requirements of ASTM C 1240.

A. Silica Fume shall be from a preapproved source listed on the CDOT Approved Products List; the City and County of Denver will recognize silica fume from a preapproved source on the CDOT list. The silica fume intended for use on the project shall have been tested and accepted prior to its use. Certified Test Reports showing that the silica fume meets the specification requirements and supporting this statement with actual test results shall be submitted to the Engineer. The certification for silica fume shall state the solids content if the silica fume admixture is furnished as slurry.

B. The silica fume shall be subject to sampling and testing by the Engineer. Test results that do not meet the physical and chemical requirements may result in the suspension of the use of the silica fume until the corrections necessary have been taken to insure that the material meets the specifications.

2.5 AGGREGATES FOR STRUCTURES: All sieve sizes and designations described in this section refer to laboratory sieves having square openings and conforming to ASTM E 11.

A. Where the Contract refers to a nominal size aggregate, the nominal size shall conform to the gradation in Table 2.5-1 below.

Table 2.5-1
DEFINITION OF NOMINAL AGGREGATES

Nominal Size	Material passing the designated sieve by weight		
	100%	90% to 100%	No more than 90%
50 mm (2")	63 mm (2½")	50 mm (2")	37.5 mm (1½")
37.5 mm (1½")	50 mm (2")	37.5 mm (1½")	25.0 mm (1")
25.0 mm (1")	37.5 mm (1½")	25.0 mm (1")	19.0 mm (¾")
19.0 mm (¾")	25.0 mm (1")	19.0 mm (¾")	12.5 mm (½")
12.5 mm (½")	19.0 mm (¾")	12.5 mm (½")	9.5 mm ($^3/_8$")
9.5 mm ($^3/_8$")	12.5 mm (½")	9.5 mm ($^3/_8$")	4.75 mm (#4)

B. The grading and composition requirements for coarse and fine aggregates for concrete are set forth in Table 2.5-2.

Table 2.5-2
CONCRETE AGGREGATE GRADATION TABLE
Percentage Passing Designated Sieves and Nominal Size Designation

Sieve Size	Coarse Aggregates (from AASHTO M 43)									Fine Aggregate
	No. 3	No. 357	No. 4	No. 467	No. 57	No. 6	No. 67	No. 7	No. 8	
	2" to 1"	2" to No. 4	1 ½" to ¾"	1 ½" to #4	1" to #4	3/4" to 3/8"	3/4" to #4	1/2" to #4	3/8" to #8	#4 to #100
2½ "	100	100								
2"	90-100	95-100	100	100						
1½"	35-70		90-100	95-100	100					
1"	0-15	35-70	20-55		95-100	100	100			
¾"			0-15	35-70		90-100	90-100	100		
1/2"	0-5	10-30			25-60	20-55		90-100	100	
3/8"			0-5	10-30		0-15	20-55	40-70	85-100	100
#4		0-5		0-5	0-10	0-5	0-10	0-15	10-30	95-100

C. FINE AGGREGATE FOR CONCRETE: Fine aggregate for concrete shall conform to the requirements of AASHTO M 6. The amount of material finer than 75 µm (No. 200) sieve shall not exceed three percent by dry weight of fine aggregate, when tested in accordance with AASHTO T 11 or Colorado Procedure 31, Method D, unless otherwise specified. The minimum sand equivalent, as tested in accordance with AASHTO T 176 shall be 80 unless otherwise specified. The fineness modulus, as determined by AASHTO T 27, shall not be less than 2.50 or greater than 3.50 unless otherwise approved.

D. COARSE AGGREGATE FOR CONCRETE: Coarse aggregate for concrete shall conform to the requirements of AASHTO M 80, except that the percentage of wear shall not exceed 45 when tested in accordance with AASHTO T 96. Coarse aggregate shall conform to the grading in Table 703-2. Sizes 357 and 467 shall each be furnished in two separate sizes and combined in the plant in the proportions necessary to conform to the grading requirements. Compliance with grading requirements will be based on the combination and not on each individual stockpile.

2.6 CURING MATERALS: Curing materials shall conform to the following requirements:

A. Burlap Cloth made from Jute or Kenaf AASHTO M 182

B. Liquid Membrane-Forming Compounds for Curing Concrete AASHTO M 148

C. Sheet Materials for Curing Concrete AASHTO M 171

D. Straw used for curing shall consist of threshed straw of oats, barley, wheat, or rye. Clean field or marsh hay may be substituted for straw when approved by the Engineer. Old dry straw or hay which breaks readily in the spreading process will not be accepted.

2.7 AIR-ENTRAINING ADMIXTURES: Air-entraining admixtures shall conform to the requirements of AASHTO M 154.

A. Admixtures which have been frozen will be rejected.

2.8 CHEMICAL ADMIXTURES: Chemical admixtures for concrete shall conform to the requirements of AASHTO M 194.

A. Admixtures which have been frozen will be rejected.

2.9 WATER: Water used in mixing or curing shall be reasonably clean and free of oil, salt, acid, alkali, sugar, vegetable, or other substance injurious to the finished product. Water will be tested in accordance with, and shall meet the suggested requirements of AASHTO T 26. Water known to be of potable quality may be used without test. Where the source of water is relatively shallow, the intake shall be so enclosed as to exclude silt, mud, grass, or other foreign materials.

2.10 CALCIUM CHLORIDE: Calcium chloride shall conform to the requirements of AASHTO M 144.

2.11 HYDRATED LIME: Hydrated lime for aggregate pretreatment shall conform to the requirements of ASTM C 207, Type N. In addition, the residue retained on a No. 200 (75 μm) sieve shall not exceed 10 percent when determined in accordance with ASTM C 110. (Drying of the residue in an atmosphere free from carbon dioxide will not be required.)

PART 3 - EXECUTION

3.1 PROPORTIONING: The Contractor shall submit a Concrete Mix Design for each strength of Structural Concrete being placed on the project. Concrete shall not be placed on the project before the Concrete Mix Design Report has been reviewed and approved by the Engineer. The Concrete Mix Design will be reviewed and approved following the procedures of CP 62. The Concrete Mix Design will not be approved when the laboratory trial mix data are the results from tests performed more than two years in the past or aggregate data are the results from tests performed more than two years in the past. The concrete mix design shall show the weights and sources of all ingredients including cement, pozzolan, aggregates, water, additives and the water cementitious ratio (w/cm). When determining the w/cm, cementitious (cm) shall be the sum of the weight of the cement, the weight of the fly ash and the weight of silica fume.

A. The laboratory trial mix data shall include results of the following:

(1) AASHTO T 119 (ASTM C 143) Slump of Hydraulic Cement Concrete.

(2) AASHTO T 121 (ASTM C 138) Weight per Cubic Foot, Yield, and Air Content (Gravimetric) of Concrete.

(3) AASHTO T 152 (ASTM C 231) Air Content of Freshly Mixed Concrete by the Pressure Method

(4) ASTM C 39 Compressive Strength of Cylindrical Concrete Specimens shall be performed with at least two specimens at 7 days and three specimens at 28 days. Three additional specimens tested at 56 days shall be required for Class H and HT concrete.

B. The Contractor shall be responsible for the placement and maintenance of the maturity meter and wire. Placement shall be as directed by the Engineer.

C. The laboratory trial mix shall have a relative yield of 0.99 to 1.02. When Portland Cement Concrete Pavement is paid with a volumetric pay quantity, the relative yield of the concrete produced on the project shall be 0.99 to 1.02.

D. If the produced concrete does not have a relative yield of 0.99 to 1.02 for two consecutive yield determinations, concrete production shall cease and the Contractor shall present a plan to correct the relative yield to the Engineer.

E. Aggregate data shall include the results of the following:

(1) AASHTO T 11 (ASTM C 117) Materials Finer Than 75 um (No. 200) Sieve in Mineral Aggregates by Washing.

(2) AASHTO T 19 (ASTM C 29) Unit Weight and Voids in Aggregate.

(3) AASHTO T 21 (ASTM C 40) Organic Impurities in Fine Aggregate for Concrete.

(4) AASHTO T 27 (ASTM C 136) Sieve Analysis of Fine and Coarse Aggregates.

(5) AASHTO T 84 (ASTM C 128) Specific Gravity and Absorption of Fine Aggregate.

(6) AASHTO T 85 (ASTM C 127) Specific Gravity and Absorption of Coarse Aggregate.

(7) AASHTO T 96 (ASTM C 131) Resistance to Degradation of Small-Size Coarse Aggregate by Abrasion and Impact in the Los Angeles Machine.

(8) AASHTO T 104 (ASTM C 88) Soundness of Aggregate by Use of Sodium Sulfate or Magnesium Sulfate.

(9) CP 37 Plastic Fines in Graded Aggregates and Soils by use of the Sand Equivalent Test

(10) ASTM C 535 Resistance to Degradation of Large-Size Coarse Aggregate by Abrasion and Impact in the Los Angeles Machine

(11) ASTM C1260 Determining the Potential Alkali Reactivity of Aggregates (Accelerated Mortar-Bar Method). When an aggregate source is known to be reactive, ASTM C1567 results may be submitted in lieu of ASTM C1260 results.

F. Any aggregate tested by ASTM C1260 with an expansion of 0.10 percent or more, or that is known to be reactive, shall not be used unless mitigative measures are included in the mix design. Mitigative measures shall be tested using ASTM C1567 and exhibit an expansion less than 0.10 percent by one of the following methods:

1) Combined Aggregates. The mix design sources of aggregates, cement and mitigative measures shall be tested. The proportions of aggregates and mitigative measures shall be those used in the mix design.

(2) Individual Aggregates. Each source and size of individual aggregates shall be tested. The source of cement and mitigative measures shall be those used in the mix design. The highest level of mitigative measures for any individual aggregate shall be the minimum used in the mix design.

G. The Concrete Mix Design Report shall include Certified Test Reports showing that the cement, fly ash and silica fume meet the specification requirements and supporting this statement with actual test results. The certification for silica fume shall state the solids content if the silica fume admixture is furnished as slurry.

H. Approved fly ash may be substituted for ASTM C150 cement up to a maximum of 20 percent Class C or 30 percent Class F by weight of total cementitious.

I. For all concrete mix designs with ASTM C595 or C1157 cements, the total pozzolan content shall not exceed 30 percent by weight of the cementitious content.

J. Where the Contractor's use of fly ash results in any delay, necessary changes in admixture quantities or source, or unsatisfactory work, the cost of such delays, changes or corrective actions shall be borne by the Contractor.

K. The Contractor shall submit a new Concrete Mix Design Report meeting the above requirements when a change occurs in the source, type, or proportions of cement, fly ash, silica fume or aggregate. When a change occurs in the source of approved admixtures, the Contractor shall submit a letter stamped by the Concrete Mix Design Engineer approving the changes to the existing mix design. The change will be approved by the Engineer prior to use.

L. The use of approved accelerating, retarding or hydration stabilizing admixtures to existing mix designs will be permitted at the discretion of the Engineer when documentation includes the following:

(1) Manufacturers recommended dosage of the admixture

(2) A letter stamped by the Concrete Mix Design Engineer approving the changes to the existing mix design.

M. Unless otherwise permitted by the Engineer, the product of only one type of hydraulic cement from one source of any one brand shall be used in a concrete mix design.

N. Review and approval of the Concrete Mix Design by the Engineer does not constitute acceptance of the concrete. Acceptance will be based solely on the test results of concrete placed on the project.

3.2 BATCHING: Measuring and batching of materials shall be done at a batching plant in accordance with AASHTO M 157.

A. The Contractor shall furnish a batch ticket (delivery ticket) with each load for all classes of concrete. Concrete delivered without a batch ticket containing complete information as specified shall be rejected. The Contractor shall collect and complete the batch ticket at the placement site and deliver all batch tickets to the Engineer on a daily basis. The Engineer shall have access to the batch tickets at any time during the placement. The following information shall be provided on each batch ticket:

(1) Supplier's name and date

(2) Truck number

(3) Project number and location

(4) Concrete class designation and item number

(5) Cubic yards batched

(6) Time batched

(7) Mix design number

(8) Type, brand, and amount of each admixture

(9) Type, brand, and amount of cement and fly ash

(10) Weights of fine and coarse aggregates

(11) Moisture of fine and coarse aggregate

(12) Gallons of batch water (including ice)

The Contractor shall add the following information to the batch ticket at the placement site:

(13) Gallons of water added by truck operator plus quantity of concrete in the truck each time water is added

(14) Number of revolutions of drum at mixing speed (for truck mixed concrete)

(15) Discharge time

(16) Location of batch in placement

(17) Water cement ratio (required for deck concrete only)

B. The drum on each truck mixer shall be reversed prior to charging to eliminate any wash water remaining in the mixer.

C. PORTLAND CEMENT AND FLY ASH: Either sacked or bulk cement may be used. No fraction of a sack of cement shall be used in a batch of concrete unless the cement is weighed.

(1) All bulk cement shall be weighed on an approved weighing device. The bulk cement weighing hopper shall be sealed and vented to preclude dusting during operation. The discharge chute shall be so arranged that cement will not lodge in it or leak from it.

(2) Separate storage and handling equipment shall be provided for the fly ash. The fly ash may be weighed in the cement hopper and discharged with the cement.

D. WATER: Unless water is to be weighed, the water-measuring equipment shall include an auxiliary tank from which the measuring tank shall be filled. The measuring tank shall be

equipped with an outside tap and valve to provide for checking the calibration unless other means are provided for readily and accurately determining the amount of water in the tank. The volume of the auxiliary tank shall be at least equal to that of the measuring tank. In lieu of the volume method specified above, the Contractor will be permitted to use a water metering device that is accurate within the prescribed limits.

E. AGGREGATES: Aggregates from different sources and of different gradings shall not be stockpiled together.

(1) Aggregate shall be handled from stockpiles or other sources to the batching plant in such manner as to secure a uniform grading of the material. Aggregates that have become segregated, or mixed with earth or foreign material, shall not be used. All aggregates produced or handled by hydraulic methods, and washed aggregates, shall be stockpiled or binned for draining at least 12 hours before being batched. Rail shipment requiring more than 12 hours will be accepted as adequate binning only if the car bodies permit free drainage. In case the aggregates contain high or non-uniform moisture content, storage or stockpile period in excess of 12 hours may be required.

F. BINS AND SCALES: The batching plant may include bins, weighing hoppers, and scales for the fine aggregate and for each size of coarse aggregate. If cement is used in bulk, a bin, hopper, and scale for cement shall be included. A single weighing hopper with an accumulative scale will be permitted, provided a separate scale is used for weighing cement.

(1) Scales shall meet industry standards, such as the requirements of CDOT Standard Specifications for Road and Bridge Construction subsection 109.01.

3.3 MIXING: Concrete may be mixed in stationary mixers, in a central-mix plant, in truck mixers, or in self-contained mobile mixers. Mixing time shall be measured from the time all materials, except water, are in the drum.

A. Silica fume, when specified, shall be added to the mix during initial batching.

B. MIXING GENERAL: The concrete shall be deposited in place within 90 minutes after batching when concrete is delivered in truck mixers or agitating trucks, and within 60 minutes when delivered in non agitating trucks. The 90 minute time limit for mixer or agitating trucks may be extended to 120 minutes if:

(1) No water is added after 90 minutes.

(2) The concrete temperature prior to placement is less than 90 °F

The 90 minute time limit for mixer or agitating trucks may be extended to 180 minutes if:

(1) No water is added after 90 minutes.

(2) The concrete temperature prior to placement is less than 90 °F.

(3) The approved concrete mix contains a water reducing and retarding admixture which conforms to AASHTO M 194, Type D.

C. STATIONARY MIXING: When mixed in a central mixing plant, the mixing time shall be between 50 and 90 seconds. Four seconds shall be added to the specified mixing time if timing starts the instant the skip reaches its maximum raised position. Mixing time ends when the discharge chute opens. Transfer time in multiple drum mixers is included in mixing time. The contents of an individual mixer drum shall be removed before a succeeding batch is emptied therein.

(1) The volume of concrete mixed per batch may exceed the mixer's nominal capacity, as shown on the manufacturer's standard rating plate on the mixer, up to 10 per cent provided concrete test data for strength, segregation, and uniform consistency are satisfactory, and provided spillage of concrete does not occur.

(2) The batch shall be so charged into the drum that a portion of the mixing water shall enter in advance of the cement and aggregates. The flow of water shall be uniform and all water shall be in the drum by the end of the first 15 seconds of the mixing period. The throat of the drum shall be kept free of such accumulations as may restrict the free flow of materials into the drum.

(3) The timing device on stationary mixers shall be equipped with a bell or other suitable warning device adjusted to give a clearly audible signal each time the lock is released. In case of failure of the timing device, the Contractor will be permitted to operate while it is being repaired, provided the Contractor furnishes an approved timepiece equipped with minute and second hands. If the timing device is not placed in good working order within 24 hours, further use of the mixer will be prohibited until repairs are made.

D. TRUCK MIXING: Truck mixed concrete shall conform with one of the following:

(1) Concrete mixed entirely in a truck mixer equipped with a mechanical counter shall be partially mixed at the plant or in transit for not less than 20 revolutions of the drum at mixing speed. The revolutions of the drum at charging speed shall not be counted as mixing revolutions. The concrete shall be mixed between 50 and 100 revolutions of the mixer drum at mixing speed at the delivery site before discharge of the concrete.

(2) Concrete partially mixed in a stationary central mixing plant with mixing brought to completion in a truck mixer (known as shrink mixing) shall be mixed for a minimum of 30 seconds in the stationary mixer. Mixing shall be completed in the truck mixer for at least 20 but not more than 100 revolutions of the mixer drum at mixing speed at the delivery site before discharge of the concrete.

(3) Concrete mixed entirely in a stationary mixer and delivered to the job in a truck mixer shall be remixed for a minimum of 20 revolutions of the mixing drum at mixing speed at the job site prior to discharge.

(a) When water is added at the delivery site to control the consistency of the concrete as specified in subsection 601.02, the concrete shall be mixed for at least 20 revolutions of the mixer drum at mixing speed for each addition of water before discharge. These revolutions are in addition to the minimum revolutions required for mixing at the delivery site. The added water shall not cause the water/cement ratio to exceed the

requirements in subsection 601.02. Water from all sources shall be documented by the ready mix producer on the delivery slip for each load of concrete.

(b) The Contractor shall provide a Concrete Truck Mixer Certification. This certification shall show the various pick-up and throw-over configurations and wear marks so that the wear on the blades can be checked. Blades shall be replaced when any part or section is worn 1 inch or more below the original height of the manufacturer's design. A copy of the manufacturer's design, showing the dimensions and arrangement of blades, shall be available to the Engineer at all times.

(c) The Contractor shall furnish a water-measuring device in good working condition, mounted on each transit mix truck, for measuring the water added to the mix after the truck has left the charging plant. Each measuring device shall be equipped with an easy-to-read gauge. Water shall be measured to the accuracy prescribed in AASHTO M 157.

E. SELF CONTAINED MOBILE MIXER: Proportioning and mixing equipment shall be of the self-contained, mobile, continuous mixing type subject to the following:

(1) The mixer shall be self-propelled and be capable of carrying sufficient unmixed dry, bulk cement, fine aggregate, coarse aggregate, admixtures and water to produce on the site not less than 6 cubic yards of concrete. The mixer shall have one bin for each size aggregate.

(2) The mixer shall be capable of positive measurement of cement being introduced into the mix. A recording meter visible at all times and equipped with a ticket printout shall indicate the quantity of total concrete mix.

(3) The mixer shall provide positive control of the flow of water into the mixing chamber. Water flow shall be indicated by flow meter and be readily adjustable to provide for minor variations in the aggregate moisture.

(4) The mixer shall be capable of being calibrated to automatically proportion and blend all components of indicated composition on a continuous or intermittent basis as required by the finishing operation, and shall discharge mixed material through a conventional chute directly in front of the finishing machine

(5) The Contractor shall perform calibration tests according to the equipment manufacturer's recommendations at the beginning of each project, and when there is a change in the mix design proportions or source of materials. The Engineer may require a calibration test or yield check whenever a change in the characteristics of the mixture is observed. The tolerances in proportioning the various ingredients shall be according to subsection 6.8 of AASHTO M 241.

3.4 AIR CONTENT ADJUSTMENT: When a batch of concrete delivered to the project does not conform to the minimum specified air content, an air-entraining admixture conforming to subsection 2.7 may be added, one time only for the batch, at the Contractor's option prior to consideration for rejection or price adjustment. After the admixture is added the concrete shall be re-mixed for a minimum of 20 revolutions of the

mixer drum at mixing speed. The concrete will then be re-tested and if found acceptable may be placed in accordance with the specifications. A maximum of three batches per day may be adjusted by adding air entraining admixture at the delivery site.

3.5 PLACING STRUCTURAL CONCRETE:

A. GENERAL: A preplacement conference shall be held with the Contractor and the Engineer prior to placement of structural concrete to discuss the method and sequence of placing structural concrete.

(1) At the pre-placement conference, the Contractor shall present a concrete winter protection plan for acceptance by the Engineer. The accepted concrete winter protection plan shall contain information on the number and type of heat sources to be used, a sketch detailing the enclosure materials, and all other pertinent information. Sufficient equipment shall be supplied to continuously maintain the specified temperature uniformly in all parts of the enclosure. Insulated blankets may be used as part of the winter protection plan.

(2) Concrete shall not be placed until forms have been completed and materials required to be embedded in the concrete have been placed, and the Engineer has inspected the forms and materials. The forms shall be cleaned of all debris before concrete is placed.

(3) The external surface of all concrete shall be thoroughly worked during the placing by means of tools of an approved type. The working shall be such as to force all coarse aggregate from the surface and to bring mortar against the forms to produce a smooth finish substantially free from water and air pockets, or honeycomb.

B. HOT WEATHER LIMITATIONS: Placing of concrete during hot weather shall be limited by the temperature of the concrete at the time of placing. Mixed concrete which has a temperature of 90 °F or higher, shall not be placed.

(1) The Contractor shall provide fogging equipment and keep the concrete surface moist at all times by fogging with an approved atomizing nozzle until the curing material is in place.

(2) The aggregate stockpiles shall be kept moist at all times.

C. COLD WEATHER LIMITATIONS: The mixed concrete temperature shall be between 50 and 90 °F at the time of placement. Water, aggregates, or both shall be heated when necessary under such control and in sufficient quantities to avoid fluctuations in the temperature of the concrete of more than 10 °F from batch to batch.

(1) To avoid the possibility of flash set when the water is heated to a temperature In excess of 100 °F, the water and the aggregates shall be charged into the mixer before the cement is added.

(2) Heating equipment or methods which alter or prevent the entrainment of the required amount of air in the concrete shall not be used. The equipment shall be capable of heating the materials uniformly. Aggregates and water used for

mixing shall not be heated to a temperature exceeding 150 °F. Materials containing frost or lumps of frozen material shall not be used.

(3) Stockpiled aggregates may be heated by the use of dry heat or steam. Aggregates shall not be heated directly by gas or oil flame or on sheet metal over fire.

(4) When aggregates are heated in bins, steam-coil or water-coil heating, or other methods which will not be detrimental to the aggregates may be used. The use of live steam on or through binned aggregates will not be permitted.

(5) Concrete shall not be placed on frozen ground. Before concrete placement, all ice, snow, and frost shall be completely removed from within formwork. Salt shall not be used to thaw ice, snow, or frost.

D. CHUTES AND THROUGHS: Concrete shall be placed so as to avoid segregation of the materials and the displacement of the reinforcement.

(1) Concrete shall not be dropped more than 5 feet, unless confined by closed chutes or pipes. Care shall be taken to fill each part of the form by depositing the concrete as near final position as possible. The coarse aggregate shall be worked back from the forms and worked around the reinforcement without displacing the bars. After initial set of the concrete, the forms shall not be jarred and strain shall not be placed on the ends of projecting reinforcement.

(2) Where steep slopes are required, the chutes shall be equipped with baffle boards or be in short lengths that reverse the direction of movement.

(3) Concrete shall not be pumped through aluminum alloy pipe.

(4) All chutes, troughs and pipes shall be kept clean and free from coatings of hardened concrete.

E. VIBRATING: Unless otherwise directed, the concrete shall be consolidated with suitable mechanical vibrators operating within the concrete. When required, vibrating shall be supplemented by hand spading with suitable tools to assure proper and adequate consolidation.

(1) Vibrators shall be of a type and design approved by the Engineer. They shall be capable of frequencies of at least 10,000 vibrations per minute, in air.

(2) Vibrators shall be so manipulated as to work the concrete thoroughly around the reinforcement and imbedded fixtures and into corners and angles of the forms.

(3) Vibrators shall not be used as a means to cause concrete to flow or run into position in lieu of placing. The vibration at any point shall be of sufficient duration to accomplish consolidation, but shall not be prolonged to the point where segregation occurs.

F. DEPOSITING CONCRETE UNDER WATER: Concrete, except for cofferdam seals, shall not be deposited under water, unless approved by the Engineer. If approved, care shall be exercised to prevent the formation of laitance. Concrete shall not be deposited

until all laitance, which may have formed on concrete previously placed, has been removed. Pumping shall be discontinued while depositing foundation concrete if it results in a flow of water inside the forms. If concrete, except for cofferdam seals, is deposited under water, the proportion of cement used shall be increased at least 25 percent at the Contractor's expense. Concrete deposited under water shall be carefully placed in a compact mass in its final position by means of a tremie. The discharge or bottom end of the tremie shall be lowered to contact the foundation at the start of the concrete placement and shall be raised during the placement at a rate which will insure that the bottom or discharge end of the tremie is continuously embedded or buried in fresh concrete a minimum of 12 inches. Air and water shall be excluded from the tremie pipe by keeping the pipe continuously filled. The continuity of the placement operation shall be maintained without breaking the seal between the concrete mass and the discharge end of the tremie until the lift is completed. The concrete placement shall not be disturbed after it has been deposited.

G. PLACEMENT: Concrete shall be placed in horizontal layers not more than 18 inches thick except as hereinafter provided. When less than a complete layer is placed in one operation, it shall be terminated in a vertical bulkhead. Each layer shall be placed and consolidated before the preceding batch has taken initial set. Each layer shall be so consolidated as to avoid the formation of a construction joint with a preceding layer which has not taken initial set. Structural concrete slab concrete on super elevation or grade that exceeds 2 percent, if any, shall be placed from the low point upward.

(1) When the placing of concrete is temporarily discontinued, the concrete, after becoming firm enough to retain its form, shall be cleaned of laitance and other objectionable material to a sufficient depth to expose sound concrete. The top surfaces of concrete adjacent to the forms shall be smoothed with a trowel to minimize visible joints upon exposed faces. Work shall not be halted within 18 inches of the top of any face, unless provision has been made for a coping less than 18 inches thick, in which case the construction joint may be made at the underside of the coping.

(2) Immediately after the work of placing concrete is halted, all accumulations of mortar splashed upon the reinforcement and surfaces of forms shall be removed before the concrete takes its initial set. Care shall be taken when cleaning reinforcing steel to prevent damage to or breakage of the concrete-steel bond.

H. PLACING SEQUENCE: Unless otherwise shown on plans, or ordered, the concrete placing sequence shall be as follows:

(1) Concrete in columns or retaining wall stems shall be placed in one continuous operation. The concrete in columns shall be allowed to set at least 12 hours before caps are placed.

(2) Transverse construction joints shall be located as shown on the plans, or as approved.

(3) Structural slab concrete, if any, shall be placed in one continuous operation.

I. DRAINAGE AND WEEP HOLES: Drainage and weep holes shall be constructed at locations shown on the plans or as ordered. Ports or vents for equalizing hydrostatic pressure shall be placed below low water.

(1) Forms for weep holes shall consist of approved form material. Wooden forms shall be removed after initial set of concrete has taken place.

(2) Inlets of weep holes shall be surrounded with 1 cubic foot of filter material in a burlap sack, securely tied.

(3) Where construction joints are allowed on visible surfaces, chamfer strips attached to the forms or other approved methods shall be utilized to provide an even joint appearance.

(4) When the plans show new concrete to be joined to existing concrete by means of bar reinforcing dowels placed in holes drilled in the existing concrete, the diameter of the holes shall be the minimum needed to place non-shrink grout or epoxy grout and the dowel. Immediately prior to placing the dowels, the holes shall be cleaned of dust and other foreign material and sufficient grout placed in the holes so that there are no voids in the drilled holes after the dowels are inserted.

K. FLOAT FINISH ON HORIZONTAL SURFACES: All freshly placed concrete on horizontal surfaces shall be given a float finish except as otherwise provided in the plans. A float finish shall be achieved by placing an excess of material in the form and removing or striking off the excess with a template, forcing the coarse aggregate below the mortar surface. Creation of concave surfaces shall be avoided. After the concrete has been struck off, the surface shall be thoroughly worked and floated with a suitable floating tool. Before the finish has set, the surface cement film shall be removed with a fine brush in order to have a fine grained, smooth but sanded texture.

L. LOADING RETAINING WALLS: Backfill shall not be placed against retaining wall stems until concrete within the retaining wall stems has attained a compressive strength of 0.8 f'c.

M. OPENING TO PUBLIC USE OR CONSTRUCTION EQUIPMENT: Concrete structures shall remain closed to public use, and shall not carry Contractor's construction vehicles whose gross weight exceeds 2,000 pounds, for 21 days after placement of the concrete deck is completed, or the post-tensioning operation has been completed, whichever occurs first.

3.6 CURING STRUCTURAL CONCRETE: When the ambient temperature is below 35 °F, the Contractor shall maintain the concrete temperature above 50 °F during the curing period. It shall be the Contractor's responsibility to determine the necessity for undertaking protective measures.

A. The minimum curing period shall be determined by one of the following methods. The Engineer shall review for adequacy, the Contractor's determination of the curing period.

(1) The minimum curing period shall be 120 hours.

(2) The minimum curing period shall be from the time the concrete has been placed

until the concrete has met a compressive strength of 80 percent of the required field compressive strength. The Contractor shall cast information cylinders on the final portion of a placement and store as close to the structure as possible. The information cylinders shall receive similar thermal protection as the structure. The contractor shall protect the information cylinders from damage. In-place strength shall be determined by at least two cylinders. If the information cylinders are destroyed in the field, the minimum curing period shall be 120 hours.

(3) The minimum curing period shall be from the time the concrete has been placed until the concrete has met a compressive strength of 80 percent of the required field compressive strength. The Contractor shall develop a maturity relationship for the concrete mix design in accordance with ASTM C 1074. The Contractor shall provide the maturity meter and all necessary thermocouples, thermometers, wires and connectors. The Contractor shall place, protect and maintain the maturity meters and associated equipment. Locations where the maturity meters are placed shall be protected in the same manner as the rest of the structure. The Contractor shall install the thermocouples at locations designated by the Engineer. The Contractor shall monitor the temperature at intervals acceptable to the Engineer.

B. Enclosures with artificial heat sources will be permitted. If enclosures are used the Contractor shall monitor the structural integrity of the enclosure. Artificial heat sources shall not be placed in such a manner as to endanger formwork or expose any area of concrete to drying due to excessive temperatures. At the end of the curing period, the protection shall remain in place until it can be removed without permitting the concrete temperature to fall more than 50 °F in a 24-hour period. Sudden changes of concrete temperature shall be prevented.

C. Immediately after placing fresh concrete, all concrete shall be cured by one of the following methods. The Engineer shall review for adequacy, the curing method proposed by the Contractor.

(1) WATER METHOD: All surfaces other than slabs shall be protected from the sun and the whole structure shall be kept wet throughout the curing period. Surfaces requiring a Class 2 finish may have the covering temporarily removed for finishing, but the covering must be restored as soon as possible. All concrete slabs shall be covered as soon as possible with suitable material so that concrete is kept thoroughly wet for at least five days. The concrete surface shall be kept moist at all times by fogging with an atomizing nozzle until the covering is placed.

(2) MEMBRANE FORMING CURING COMPOUND METHOD: Curing compound may be applied only to those surfaces, which are to receive a Class I or Class 4 final finish. A volatile organic content (VOC) compliant curing compound conforming to AASHTO M 148, Type 2 shall be used on surfaces where curing compound is allowed, except that Type 1 curing compound shall be used on exposed aggregate or colored concrete, or when directed by the Engineer. Curing compound shall not be used on construction joints. The rate of application of curing compound will be in accordance with the manufacturer's recommendation, but shall not be more than 300 square feet per gallon. All

concrete cured by this method shall receive two applications of the curing compound. The first coat shall be applied immediately after stripping of forms and acceptance of the concrete finish. If the surface is dry, the concrete shall be thoroughly wet with water and the curing compound applied just as the surface film of water disappears. The second application shall be applied after the first application has set. During curing operations, all unsprayed surfaces shall be kept wet with water. The coating shall be protected against marring for a period of at least ten days after application. Coating marred, or otherwise disturbed, shall be given an additional coating. Should the surface coating be subjected continuously to injury, the Engineer may require that water curing, as described in subsection 601.13(a) be applied at once. When using a curing compound, the compound shall be thoroughly mixed within an hour before use. If the use of a curing compound results in a streaked or blotchy appearance, its use shall be discontinued. Water curing, as described in subsection 601.13 (a), shall then be applied until the cause of the defective appearance is corrected.

(3) FORM METHOD: Concrete shall be protected by forms during the curing period. Forms shall be kept moist, when necessary, during the curing period to insure the concrete surface remains wet.

(4) BLANKET METHOD: Electrically heated curing blankets or insulation blankets may be used in cold weather to maintain specified curing temperature and to retain moisture in concrete. Blankets shall be lapped at least 8 inches and shall be free of holes. Blankets shall be secured at laps and edges to prevent moisture from escaping.

D. POTENTIAL FROST DAMAGE: The following procedures shall be followed if the temperature of the concrete structure falls below 32 °F before the concrete reaches 80 percent of the required field compressive strength:

(1) The Contractor will take cores at locations designated by the Engineer.

(2) The Engineer will take immediate possession of the cores and submit the cores to a petrographer for examination in accordance with ASTM C 856.

(3) All costs associated with coring, transmittal of cores, and petrographic examination shall be borne by the Contractor regardless of the outcome of the petrographic examination.

(4) Concrete damaged by frost as determined by the petrographic examination shall be removed and replaced at the Contractor’s expense.

3.7 TOLERANCES OF ACCEPTABLE CONCRETE AND UNACCEPTABLE CONCRETE: These provisions apply to all Structural Concrete.

A. AIR CONTENT: At any time during the placement of the concrete, when a batch deviates from the minimum or maximum percent of total air content specified, the following procedure will be used to analyze the acceptability of the concrete.

(1) A batch that deviates from the specified air content by more than one percent and will be rejected. Portions of loads incorporated into structures prior to

determining test results which indicate rejection as the correct course of action shall be subject to acceptance at reduced price, no payment, or removal as determined by the Engineer.

(2) A batch that deviates from the specified air content by one percent or less, may be incorporated into the project at a reduced price, calculated as follows: The first batch that deviates from the specified air content by ½ percent or less, will be accepted at full price. The first batch that deviates from the specified air content by more than ½ percent and up to 1 percent, which the Contractor elects to place, will be accepted at a reduced price. The second and third successive batches of a series that deviate from the specified air content by 1 percent or less, which the Contractor elects to place, will be accepted at a reduced price. The fourth and all other successive batches of a series that deviate from the specified air content will be rejected. The rejected batch count will stop with a batch that is within the specified air content, and deviation batch count will resume at one with the next batch that deviates from the specified air content.

B. SLUMP: Slump acceptance, but not rejection, may be visually determined by Engineer. During the placement of the concrete, when a batch exceeds the maximum slump specified, the following procedure shall be used to analyze the acceptability of the concrete.

(1) A batch that exceeds the maximum slump specified by more than 1 inch will be rejected. Portions of loads incorporated into structures prior to determining test results which indicate rejection as the correct course of action shall be subject to acceptance at reduced price, no payment, or removal as determined by the Engineer.

(2) A batch that exceeds the maximum slump specified by 1 inch or less, may be incorporated into the project at a reduced price, calculated as follows: The first batch that exceeds the maximum slump specified by ½ inch or less, will be accepted at full price. The first batch that exceeds the maximum slump specified by more than ½ inch and up to 1 inch, which the Contractor elects to place, will be accepted at a reduced price. The second and third successive batches of a series that exceed the maximum slump specified by 1 inch or less, which the Contractor elects to place, will be accepted at a reduced price. The fourth and all other successive batches of a series that exceed the maximum slump specified shall be rejected. The rejected batch count will stop with a batch that has less than the maximum slump, and will resume at one with the next batch that exceeds the maximum slump.

C. STRENGTH: The concrete will be considered acceptable when the running average of three consecutive strength tests is equal to or greater than the specified strength and no single test falls below the specified strength by more than 500 psi. A test is defined as the average strength of three test cylinders cast in plastic molds from a single sample of concrete and cured under standard laboratory conditions prior to testing. If the compressive strength of any one test cylinder differs from the average by more than 10 percent that compressive strength will be deleted and the average strength will be determined using the compressive strength of the remaining two test cylinders.

(1) When the average of three consecutive strength tests is below the specified

strength, the individual low tests will be used to determine the pay factor in accordance with CDOT Table 601-3. If less than three strength tests are available the individual low tests, if any, will be used to determine the pay factor in accordance with CDOT Table 601-3. The pay factor will be applied to the quantity of concrete represented by the individual low test. For concrete having a specified strength of less than 4500 psi, when the compressive strength test is below the specified strength by more than 500 psi, the concrete represented will be rejected. For concrete having specified strength of 4500 psi or greater, when the compressive strength test is below the specified strength by more than 500 psi but not more than 1000 psi, the concrete represented will be evaluated by the Engineer for removal, corrective action, or acceptance at a reduced price. All costs of the evaluation shall be at the Contractor's expense. When the compressive strength test is below the specified strength by more than 1000 psi, the concrete represented will be rejected.

(2) The Contractor may take cores at its own expense and in accordance with Colorado Procedure 65 (industry standard in Colorado) to provide an alternative determination of strength. Price reduction for strength will be based on the 28 day compressive strength of acceptance cylinders or corresponding cores strength, whichever is greater

D. TOLERANCES: Unless otherwise stated in the plans or specifications, tolerances for concrete construction and materials shall be in accordance with ACI 117.

(1) Cast in place structural slabs shall be no more than ½ inch thicker nor more than ¼ inch thinner than the cross-sectional vertical dimension shown on the plans.

PART 4- MEASUREMENT AND PAYMENT

1.1 MEASUREMENT

A. Measurement will be made by the contract unit specified for Structural Concrete.

1.2 PAYMENT

A. Payment will be made at the contract unit price, and shall include required materials, transportation, equipment, labor, excavation, stockpiling, disposing, hauling off, watering, dust control, erosion and sediment control, compaction, sub-grade preparation, formwork, placing of concrete, reinforcing, joints, curing, finishing and all other items required to complete the work as required in accordance with the Contract Drawings and Specifications

END OF SECTION 03 31 00

DIVISION 5 – METALS

PART 1 - GENERAL

1.1 SUMMARY

A. Section includes steel guardrail and handrail and supplementary items required for installation

1.2 RELATED SECTIONS:

A. Painting and steel finishes are specified in Section 09900 Painting.

B. Lumber is specified in Section 6105 Miscellaneous Carpentry.

1.3 PERFORMANCE REQUIREMENTS

A. Provide railing systems in accordance with the following building codes which are capable of withstanding both loading and stresses conforming outlined therein:

1. IBC 2009
2. ADA Standards for Accessible Design Guidelines (current version), www.ada.gov
3. Denver Building Code (revised September 2012)

B. Structural Performance of Handrails and Railings: Provide handrails and railings capable of withstanding the following structural loads without exceeding the allowable design working stress of materials for handrails, railings, anchors, and connections:

1. Handrails Not Serving as Top Rails: Capable of withstanding the following loads applied as indicated:
   a. Concentrated load of 200 lb. applied at any point and in any direction.
   b. Uniform load of 50 lb/ft. applied in any direction.
   c. Concentrated and uniform loads above need not be assumed to act concurrently.

1.4 SUBMITTALS

A. Product Data: Submit for metal railings and accessories.

B. Shop Drawings: Submit shop drawings for all metal fabrications. Include material cut sheets, plans, elevations, sections, details, and attachments to other work. Shop drawings shall indicate weld types, embedment types and location and shall include structural analysis data signed and sealed by the qualified professional engineer responsible for their preparation outlining conformance with building codes and standards referenced in 1.2.

C. Samples: Submit samples of each of the following illustrating the exposed finish and workmanship.

1. Railing frame and hardware components.
2. Embedment Plates

3. Color sample of paint.

D. Manufacturer's Certificates: Signed by manufacturers of steel products certifying that products furnished comply with requirements.

1.5 QUALITY ASSURANCE

A. Source Limitations: Obtain metal railings through one (1) source from a single manufacturer.

B. Mockups: Construct a mockup to verify finish selections and to serve as a standard for aesthetic effects and qualities of materials and execution.

1. Approved mockups may not become part of the completed Work if undisturbed at time of Substantial Completion.
2. Build mockups of railing consisting of two (2) posts, top rail, and anchorage system components that are full height and are not less than 24 inches in length.

C. Pre-Installation Meeting: Schedule pre-installation meeting 1 week before start of fabrication of railing frame components at project site.

D. Welding: Qualify procedures and personnel according to the following:
1. AWS D1.1, "Structural Welding Code-Steel."

1.6 PROJECT CONDITIONS

A. Field Measurements: Prior to fabrication, verify actual locations of walls, stairs, and other construction contiguous with railings by field measurements and indicate measurements on shop drawings.
1. Provide allowance for trimming and fitting at site.

1.7 DELIVERY, STORAGE, AND HANDLING

A. Store and handle in strict compliance with manufacturer's written instructions and recommendations.

B. Protect from damage due to weather, excessive temperature, and construction operations.

C. Coordinate installation of anchorages for railings. Furnish setting drawings, templates, and directions for installing anchorages, including sleeves, concrete inserts, anchor bolts, and items with integral anchors, that are to be embedded in concrete. Deliver such items to the project site in time for installation.

1.8 REFERENCES

A. American Iron and Steel Institute (AISI); Steel Products Manual; Stainless and Heat Resisting Steel.

B. American National Standards Institute (ANSI)

1. A21.1 Safety Requirements for Floor and Wall Openings, Railings and Toe Boards.
2. A58.1 Minimum Design Loads in Buildings and Other Structures.
3. A117.1 Accessible and Usable Buildings and Facilities.

A. American Society for Testing and Materials (ASTM)

1. A 29 Specification for Steel Bars, Carbon and Alloy, Hot-Wrought and Cold-Finished, General Requirements for.
2. A 36 Carbon Structural Steel
3. A 53 Pipe, Steel, Black and Hot Dipped, Zinc Coated Welded and Seamless
4. A 108 Steel Bars, Carbon, Cold Finished, Standard Quality
5. A 269 Specification for Seamless and Welded Austenitic Stainless Steel Tubing for General Service.
6. A 276 Specification for Stainless and Heat-Resisting Steel Bars and Shapes.
7. A 312 Specification for Seamless and Welded Austenitic Stainless Steel Pipe.
8. A 320 Alloy Steel Bolting Materials for Low Temperature Service
9. A 500 Specification for Cold-Formed Welded and Seamless Carbon Steel Structural Tubing in Rounds and Shapes.
10. A 512 Specification for Cold-Drawn Buttweld Carbon Steel Mechanical Tubing.
11. A 554 Welded Stainless Steel Mechanical Tubing
12. A 582 Free Machining Stainless and Heat Resisting Steel Bars.
13. A 743 Specification for Corrosion-Resistant Iron Chromium, Iron Chromium-Nickel, and Nickel Base Alloy Castings for General Application.
14. A1264-1 Safety Requirements for Workplace Floor and Wall Openings, Stairs and Railing Systems
15. B 43 Specification for Standard Sizes of Seamless Red Brass Pipe.
16. B 211 Aluminum and Aluminum Alloy Bar, Rod and Wire
17. B 221 Specification for Aluminum-Alloy Bars, Rods, Wires, Shapes and Tubes
18. B 429 Specification for Aluminum-Alloy Extruded Structural Pipe and Tube.
19. B 455 Specification for Copper-Zinc-Lead Alloy (Leaded Brass) Extruded Shapes.
20. B 483 Specification for Aluminum and Aluminum-Alloy Drawn Tubes for General Purpose Applications.
21. C 595 Specification for Blended Hydraulic Cements.
22. D 1730 Recommended Practices for Preparation of Aluminum and Aluminum Alloy Surfaces for Painting.
23. E 84 Test Method for Surface Burning Characteristics of Building Materials.
24. E 894 Standard Test Methods for Anchorage of Permanent Metal Railing Systems and Rails for Buildings.
25. E 935 Standard Test Methods for Performance of Permanent Metal Railing Systems and Rails for Buildings.
26. E 985 Specification for Permanent Metal Railing Systems and Rails for Buildings

PART 2 - PRODUCTS

2.1 METALS, GENERAL

A. Metal Surfaces, General: Refer to plan for dimensions. Provide materials with smooth surfaces, without seam marks, roller marks, rolled trade names, stains, discolorations, or blemishes.

B. Brackets, flanges, and anchors: Cast or formed metal of same type of material and finish as supported rails, unless otherwise indicated.

2.2 STEEL

A. Tubing: ASTM A500 (cold formed) or ASTM A513, Type 5 (mandrel drawn)

B. Pipe: ASTM A53/A53M, Type F or Type S, Grade A, Standard Weight (Schedule 40), unless another grade and weight are required by structural loads.

C. Plates, Shapes, and Bars: ASTM A36/A36M

2.3 FASTENERS

A. General: Provide the following:
   1. Steel Railings: Plated steel fasteners complying with ASTM B 633, Class Fe/Zn 25 for electrodeposited zinc coating.

B. Fasteners for Anchoring Railings to Other Construction: Select fasteners of type, grade, and class required to produce connections suitable for anchoring railings to other types of construction indicated.

C. Fasteners for Interconnecting Railing Components:
   1. Provide concealed fasteners for interconnecting railing components and for attaching them to other work, unless otherwise indicated.
   2. Provide concealed fasteners for interconnecting railing components and for attaching them to other work, unless exposed fasteners are unavoidable or are the standard fastening method for railings indicated.
   3. Provide tamper-resistant flat-head machine screws for exposed fasteners, unless otherwise indicated.

D. Anchors: Provide torque-controlled expansion anchors, fabricated from corrosion-resistant materials with capability to sustain, without failure, a load equal to six times the load imposed when installed in unit masonry and equal to four times the load imposed when installed in concrete, as determined by testing per ASTM E 488 conducted by a qualified independent testing agency.

2.4 FABRICATION

A. Fabricate decorative metal railings to comply with requirements indicated for design, dimensions, member sizes and spacing, details, finish, and anchorage, but not less than that required to support specified structural loads. Contractor shall submit shop drawings prior to fabrication.

B. Assemble railings in the shop to greatest extent possible to minimize field splicing and assembly. Disassemble units only as necessary for shipping and handling limitations. Clearly mark units for reassembly and coordinated installation. Use connections that maintain structural value of joined pieces.

C. Cut, drill, and punch metals cleanly and accurately. Remove burrs and ease edges to a radius of approximately 1 mm (1/32 inch), unless otherwise indicated. Remove sharp or rough areas on exposed surfaces.

D. Form work true to line and level with accurate angles and surfaces.

E. Fabricate connections that will be exposed to weather in a manner to exclude water. Provide weep holes where water may accumulate.

F. Cut, reinforce, drill, and tap as indicated to receive finish hardware, screws, and similar items.

G. Connections: Fabricate railings with welded connections, unless otherwise indicated.

H. Welded Connections: Cope components at connections to provide close fit, or use fittings designed for this purpose. Weld all around at connections, including at fittings.
   1. Use materials and methods that minimize distortion and develop strength and corrosion resistance of base metals.
   2. Obtain fusion without undercut or overlap.
   3. Remove flux immediately.

I. Form simple and compound curves by bending members in jigs to produce uniform curvature for each repetitive configuration required; maintain cross section of member throughout entire bend without buckling, twisting, cracking, or otherwise deforming exposed surfaces of components.

J. Close exposed ends of railing members with prefabricated end fittings.

K. Provide wall returns at ends of wall-mounted handrails, unless otherwise indicated. Close ends of returns.

L. Brackets, Flanges, Fittings, and Anchors: Provide wall brackets, flanges, miscellaneous fittings, and anchors to interconnect decorative metal railing members to other work, unless otherwise indicated.

M. Provide inserts and other anchorage devices for connecting railings to concrete or masonry work. Fabricate anchorage devices capable of withstanding loads imposed by railings. Coordinate anchorage devices with supporting structure.

2.5 PAINT

A. Reference Section 099313 Painting for additional requirements.

B. Color: Tnemec Gray-33GR or approved equal.

PART 3 - EXECUTION

2.1 EXAMINATION

A. Examine substrates, areas, and conditions to which metal fabrications attach or abut, for compliance with requirements that affect installation and anchorage and with requirements for installation tolerances. Notify the Owner's Representative in writing of conditions detrimental to proper completion of the work. Do not proceed with work until unsatisfactory conditions have been corrected.

2.2 INSTALLATION

A. Install in strict accordance with approved shop drawings. Coordinate installation with adjacent work to ensure proper clearances.

B. Install metal fabrications plumb, level, square, and rigid.

C. Anchor and assemble metal fabrications to mounting surfaces as indicated on shop drawings. Field welding of components is not acceptable except as an additional source of structural support.

3.3 PAINTING

A. Reference Section 099313 Painting.

3.4 CLEANING AND PROTECTION

A. Clean exposed surfaces of metal fabrications in accordance with manufacturer's recommendations.

B. Protect installed products from damage or soiling until completion of project.

C. Remove and replace metal fabrication components that cannot be successfully cleaned and repaired to permanently eliminate evidence of damage, including dented and bent components.

PART 4- MEASUREMENT AND PAYMENT

2.3

4.1 MEASUREMENT

A. Measurement will be made by the contract unit specified for Metal Fabrication.

PAYMENT

B. Payment will be made at the contract unit price, and shall include required materials, transportation, equipment, labor, stockpiling, disposing, hauling off, finishing and all other items required to complete the work as required in accordance with the Contract Drawings and Specifications.

END OF SECTION

DIVISION 6 – CARPENTRY

SECTION 06105 MISCELLANEOUS CARPENTRY

PART 1 GENERAL

1.1 SUMMARY

A. Section includes high density hardwood lumber and supports

1.2 RELATED DOCUMENTS

A. The General Contract Conditions, drawings and other Division 1 Specification Sections, apply to this Section.

1.3 RELATED SECTIONS

A. Section 05510 – Guardrail/Handrail Metal Fabrication

PART 2 PRODUCTS

2.01 WOOD PRODUCTS GENERAL

A. Ipe Lumber:
1. Certified Wood: High Density Hardwood Lumber certified as FSC Pure according to FSC STD-01-001, "FSC Principles and Criteria for Forest Stewardship."
2. All wood for the project shall be from the same source and supplier.
3. Warranty: Provide manufacturer's standard 25 year warranty for high density hardwood lumber materials against insect damage and decay.

2.02 FASTENERS

A. General: Provide fasteners of size and type indicated that comply with requirements specified in this Article for material and manufacture.

B. Power-Driven Fasteners: CABO NER-272.

C. Wood Screws: ASME B18.6.1.

D. Screws for Fastening to Cold-Formed Metal Framing: ASTM C 954, except with wafer heads and reamer wings, length as recommended by screw manufacturer for material being fastened.

E. Lag Bolts: ASME B18.2.1. (ASME B18.2.3.8M).

F. Bolts: Steel bolts complying with ASTM A 307, Grade A (ASTM F 568M, Property Class 4.6); with ASTM A 563 (ASTM A 563M) hex nuts and, where indicated, flat washers.

G. Expansion Anchors: Anchor bolt and sleeve assembly of material indicated below with capability without failure, a load equal to 6 times the load imposed when installed in unit masonry assemblies and equal to 4 times the load imposed when installed in concrete as determined by testing per ASTM E 488 conducted by a qualified independent testing and inspecting agency.

1. Material: Carbon-steel components, zinc plated to comply with ASTM B 633, Class Fe/Zn 5.
2. Material: Stainless steel with bolts and nuts complying with ASTM F 593 and ASTM F 594, Alloy Group 1 or 2 (ASTM F 738M and ASTM F 836M, Grade A1 or A4).

PART 3 EXECUTION

3.01 INSTALLATION, GENERAL

A. Discard units of material with defects that impair quality of carpentry and that are too small to use with minimum number of joints or optimum joint arrangement.

B. Set carpentry to required levels and lines, with members plumb, true to line, cut and fitted. Fit carpentry to other constructions; scribe and cope as needed for accurate fit. Locale nailers, blocking, and similar supports to comply with requirements for attaching other construction.

C. Securely attach carpentry work.

D. Use fasteners of appropriate type and length. Pre-drill members when necessary to avoid splitting wood.

3.02 WOOD BLOCKING, AND NAILER INSTALLATION

A. Install where indicated and where required for supporting or attaching other work. Form to shapes indicated and cut as required for true line and level of attached work. Coordinate locations with other work involved.

B. Attach items to substrates to support applied loading. Recess bolts and nuts flush with surfaces, unless otherwise indicated.

PART 4 MEASUREMENT AND PAYMENT

1.1 MEASUREMENT

A. Measurement will be made by the contract unit specified for Carpentry.

1.2 PAYMENT

Payment will be made contract unit price, and shall include required materials, transportation, equipment, labor, excavation, stockpiling, disposing, hauling off, fasteners, protection, finishing and all other items required to complete the work as required in accordance with the Contract Drawings and Specifications.

END OF SECTION

DIVISION 9 – PAINTING & COATING

SECTION 09900 PAINTING

PART 1 GENERAL

1.01 RELATED DOCUMENTS

A. The General Contract Conditions, Drawings, and Division – 1 Specification sections, apply to Work of this section.

1.02 DESCRIPTION

A. The work in this section consists of surface preparation and field painting of exposed site furnishings, handrails and guardrails, and miscellaneous exposed exterior items.

1. "Paint" as used herein means all coating systems materials, including primers, emulsions, enamels, stains, sealers and fillers, and other applied materials whether used as prime, intermediate or finish coats.

2. Painting all exposed surfaces whether or not colors are designated in "schedules", except where the natural finish of the material is specifically noted as a surface not to be painted.

B. Where items or surfaces are not specifically mentioned, paint these the same as adjacent similar materials or areas. If finish is not designated, the Project Manager will select the materials or system.

1.03 PAINTING NOT INCLUDED

A. The following categories of work are not included as part of the field-applied finish work, or are included in other sections of these specifications:

1. Shop Priming: Unless otherwise specified, surface preparation and shop priming of ferrous metal items is included under the various sections fur structural steel, miscellaneous metal, hollow metal work and similar items. Also, for fabricated components such as shop-fabricated or factory-built mechanical and electrical equipment or accessories.

2. Mechanical and Electrical Work: Painting specified in Division 15 and 16 sections.

3. Pre-Finished Items: Unless otherwise indicated, do not include painting when factory-finishing or installer finishing is specified for such items as (but not limited to) site furnishings, finished mechanical and electrical equipment including light fixtures, main switch gear and distribution cabinets and equipment.

4. Operating Parts and Labels

a. Moving parts of operating units, mechanical and electrical parts, such as valve and damper operators, linkages, sinkages, sensing devices, motor and fan shafts will not require finish painting, unless otherwise indicated.

b. Do not paint over any code-required labels, such as Underwriter's Laboratories and Factory Mutual, or any equipment identification, performance rating, name or nomenclature plates.

1.04 SUBMITTALS

A. Submit information for Project Manager's review including the manufacturer, product name and/or number, and the color name and/or number.

1.05 QUALITY ASSURANCE

A. Where not otherwise specified, follow recommendations of "Painting Specifications" by Painting & Decorating Contractors of America, "Type 1, Recommended Jobs."

B. Provide primers and other undercoat paint produced by same manufacturer as finish coats. Use only thinners approved by paint manufacturer, and use only within recommended limits.

C. Review other sections of these specifications in which prime paints are to be provided to ensure compatibility of total coatings system for various substrates. Upon request from other trades, furnish information or characteristics of finish materials provided for use, to ensure compatible prime coats are used.

1.06 DELIVERY, STORAGE AND HANDLING

A. Deliver all materials to the job site in original, new and unopened packages and containers bearing manufacturer's name and label, and name of material, FS number if applicable, stock number, date of manufacture, contents by volume for major constituents, thinning and application instructions, color number and name. Do not remove or make label information illegible.

1.07 PROJECT/SITE CONDTIONS

A. Apply water-base paints only when the temperature of surfaces to be painted and the surrounding air temperatures are between 50°F and 90°F unless otherwise permitted by the paint manufacturer's printed instructions.

B. Apply solvent-thinned paints only when temperature of surfaces to be painted and the surrounding air temperatures are between 45°F and 95°F, unless otherwise permitted by the paint manufacturer's printed instructions and the Project Manager.

C. Do not apply paint in snow, rain, fog or mist.

1.08 CLOSEOUT SUBMITTALS

A. As specified in Division 1 Specifications.

B. Furnish one gallon of each type and color of paint used. Containers to be tightly sealed and clearly labeled for identification.

C. Maintenance data for review and approval.

1. Manufacturer's cleaning instructions for painted surfaces.

2. A final paint schedule listing, for each type of paint material used, the manufacturer, product name and/or number, color name and/or number, and locations installed.

PART 2 – PRODUCTS

2.01 MATERIALS:

A. TNEMEC Company, Inc. Primer and Paint System, or approved equal:

1. Primer: TNEMEC 90-97 Zinc Primer
   a. Primer shall be an aromatic urethane.
   b. Primer shall be a two component, moisture cured, zinc-rich primer that is corrosion resistant.

2. Top Coat: TNEMEC Endura Shield 73
   a. Top Coat Color: Gray -33GR
   b. Semi-Gloss Finish
   c. Top Coat shall be an aliphatic acrylic polyurethane highly resistant to abrasion, wet conditions, corrosion, and exterior weathering.
   d. Top Coat Shall meet the accelerated weathering requirements of SSPC Paint Standard 36.

PART 3 – EXECUTION

3.01 APPLICATION

A. General

1. Apply paint in accordance with the manufacturer's directions. Use application and techniques best suited for the substance and type of materials being applied.

2. Form true, straight lines against other materials, finishes and color changes.

3. Apply additional coats when undercoats, stains or other conditions show through the final coat of paint, until the paint film is of uniform finish, color and appearance. Give special attention to ensure that all surfaces, including edges, comers, crevices, welds and exposed fasteners received a dry film thickness equivalent to that of flat surfaces.

3.02 CLEANUP AND PROTECTION

A. Cleanup

1. During the progress of the work, remove from the site all discarded paint materials, rubbish, cans and rags at the end of each work day.

2. Upon completion of painting work, clean glass and other paint-spattered surfaces. Remove spattered paint by proper methods of washing and scraping, using care not to scratch or otherwise damage finished surfaces.

B. Protection

1. Protect work of other trades, whether to be painted or not, against damage by painting and finishing work. Correct any damage by cleaning, repairing or replacing, as acceptable to the Project Manager.

2. Provide “Wet Paint” signs as required to protect newly-painted finishes. Remove temporary, protective wrappings provided by others for protection of their work, after completion of painting operations.

3. At the completion of work of other trades, touch-up and restore all damaged or defaced painted surfaces.

PART 4- MEASUREMENT AND PAYMENT

1.1 MEASUREMENT

A. Measurement will be based on the percentage complete for the lump sum contract amount for Painting & Coating.

1.2 PAYMENT

B. Payment will be made at the lump sum contract price, and shall include required materials, transportation, equipment, labor, stockpiling, disposing, hauling off, cleaning, protection, and finishing and all other items required to complete the work as required in accordance with the Contract Drawings and Specifications.

END OF SECTION

DIVISION 12 – SITE FURNISHINGS

SECTION 128300 SITE FURNISHINGS

PART 1 - GENERAL

1.1 RELATED DOCUMENTS

Review the General Contract Conditions and Division One, General Requirements, which contain information and requirements that apply to this Section.

1.2 DESCRIPTION

A. The work in this section consists of furnishing and installing benches, specialty benches, bicycle racks, and trash receptacles.

1.3 QUALITY ASSURANCE

A. Material and craftsmanship for site furnishings shall conform to recognized association standards.

B. Contractor to submit color samples, technical data, and installation methods prior to any ordering and or installing of these items.

C. Contractor to field locate each item and associated paving prior to any installation and/or construction and shall have Project Manager's review.

PART 2 - PRODUCTS

A. Bike Racks
Manufacturer: Wasua Tile.; P.O. Box 1520, Wasua, Wisconsin 54402, 1-800-388-8728, or approved equal.
1. Model: Loop 9006 *(Surface Mount)*
2. Description: 'U' Bike Rack
3. Color: 8 Black
4. Contact: Recreation Plus, 15209 W. Ellsworth Drive, Golden, CO, 80401, 303-278-1606

B. Play Equipment: "Dish",
1. Manufacturer: Goric USA, 464 Commons St. #148, Belmont, MA 02478
2. Model: Dish, Catalog # 500-00-149
3. Contact: Recreation Plus, 15209 W. Ellsworth Drive, Golden, CO, 80401, 303-278-1606

C. Play Equipment: “Jumper”,
   1. Manufacturer: Goric USA, 464 Commons St. #148, Belmont, MA 02478
   2. Model: Jumper, Catalog # 500-00-056
   3. Contact: Recreation Plus, 15209 W. Ellsworth Drive, Golden, CO, 80401, 303-278-1606

D. Play Equipment: “Whirlwind”,
   4. Manufacturer: Goric USA, 464 Commons St. #148, Belmont, MA 02478
   5. Model: Whirlwind, Short, Curved, Catalog # 500-00-4
      Contact: Recreation Plus, 15209 W. Ellsworth Drive, Golden, CO, 80401, 303-278-1606

PART 3 - EXECUTION

3.01 INSTALLATION

A. All site furnishings shall be installed per Drawing Detail(s) and manufacturer’s instructions.

PART 4- MEASUREMENT AND PAYMENT

4.01 MEASUREMENT

A. Measurement will be made by the contract unit specified for Site Furnishings.

4.02 PAYMENT

A. Payment will be made at contract unit price, and shall include required materials, transportation, equipment, labor, excavation, stockpiling, disposing, hauling off, freight, fastening, and all other items required to complete the work as required in accordance with the Contract Drawings and Specifications.

END OF SECTION

DIVISION 26 – ELECTRICAL

SECTION 260519 LOW-VOLTAGE ELECTRICAL CONDUCTORS AND CABLES

PART 1 - GENERAL

1.1 SUMMARY

A. This Section includes the following:
   1. Building wires and cables rated 600 V and less.
   2. Connectors, splices, and terminations rated 600 V and less.

1.2 ACTION SUBMITTALS

A. See Section 01 3000 – Administrative Requirements, for submittal procedures

1.3 INFORMATIONAL SUBMITTALS

A. See Section 01 3000 – Administrative Requirements, for submittal procedures

1.4 QUALITY ASSURANCE

A. Electrical Components, Devices, and Accessories: Listed and labeled as defined in NFPA 70, Article 100, by a testing agency acceptable to authorities having jurisdiction, and marked for intended use.

B. Comply with NFPA 70.

PART 2 - PRODUCTS

2.1 CONDUCTORS AND CABLES

A. Available Manufacturers: Subject to compliance with requirements, manufacturers offering products that may be incorporated into the Work include, but are not limited to, the following:

B. Manufacturers: Subject to compliance with requirements, provide products by one of the following:
   1. Alcan Products Corporation; Alcan Cable Division.
   2. American Insulated Wire Corp.; a Leviton Company.
   3. Southwire Company.
   4. Aetna Insulated Wire Company
   5. AFC Cable Systems, Inc.
   6. Anixter, Inc.
   7. Essex Group, Inc.

8. Ideal
9. Ilsco

C. Copper Conductors: Comply with NEMA WC 70.

D. Conductor Insulation: Comply with NEMA WC 70 for Types THHN-THWN XHHW.

E. Multiconductor Cable: Not allowed with the exception of connections to lighting, limited to 5-foot lengths.

2.2 CONNECTORS AND SPLICES

A. Available Manufacturers: Subject to compliance with requirements, manufacturers offering products that may be incorporated into the Work include, but are not limited to, the following:

B. Manufacturers: Subject to compliance with requirements, provide products by one of the following:
1. AFC Cable Systems, Inc.
2. Hubbell Power Systems, Inc.
3. O-Z/Gedney; EGS Electrical Group LLC.
4. 3M; Electrical Products Division.
5. Tyco Electronics Corp.
6. Ideal
7. Ilsco

C. Description: Factory-fabricated connectors and splices of size, ampacity rating, material, type, and class for application and service indicated.

PART 3 - EXECUTION

3.1 CONDUCTOR MATERIAL APPLICATIONS

A. Feeders: Copper. Solid for No. 10 AWG and smaller; stranded for No. 8 AWG and larger.

B. Branch Circuits: Copper. Solid for No. 10 AWG and smaller; stranded for No. 8 AWG and larger.

3.2 CONDUCTOR INSULATION AND MULTICONDUCTOR CABLE APPLICATIONS AND WIRING METHODS

A. Service Entrance: Type XHHW, single conductors in raceway.

B. Feeders & Branch Circuits: Type THHN-THWN, single conductors in raceway.

C. The default branch circuit conduit and wire size shall be (2 #12 CU & 1 #12 CU GND) ½"C, unless otherwise noted on the drawings.

3.3 INSTALLATION OF CONDUCTORS AND CABLES

A. All cables shall be concealed in finished walls, ceilings, partitions, and under raised floors, unless otherwise indicated. Cables shall not be installed through walls or floors. In wet locations, cables shall have a liquid-tight type covering.

B. Use manufacturer-approved pulling compound or lubricant where necessary; compound used must not deteriorate conductor or insulation. Do not exceed manufacturer's recommended maximum pulling tensions and sidewall pressure values.

C. Use pulling means, including fish tape, cable, rope, and basket-weave wire/cable grips, that will not damage conductors or raceway.

D. Support cables according to Division 26 Section "Hangers and Supports for Electrical Systems."

E. Identify and color-code conductors and cables according to Division 26 Section "Identification for Electrical Systems."

F. Install all wire continuous from outlet to outlet or terminal to terminal. Splices in cables when approved shall be made in handholds, pull boxes, or junction boxes. Make branch circuit splices in outlet boxes with 8 inch of correctly color-coded tails left in the box. Splices shall be held to a minimum.

G. Install dedicated neutral conductors for branch circuits that supply dimmed lighting circuits and multi-wire branch circuits.

3.4 CONNECTIONS

A. Tighten electrical connectors and terminals according to manufacturer's published torque-tightening values. If manufacturer's torque values are not indicated, use those specified in UL 486A and UL 486B.

B. Make splices and taps that are compatible with conductor material and that possess equivalent or better mechanical strength and insulation ratings than unspliced conductors.

C. Wiring at Outlets: Install conductor at each outlet, with at least 6 inches of slack.

3.5 SLEEVE AND SLEEVE-SEAL INSTALLATION FOR ELECTRICAL PENETRATIONS

A. Install sleeves and sleeve seals at penetrations of exterior floor and wall assemblies. Comply with requirements in Division 26 Section "Sleeves and Sleeve Seals for Electrical Raceways and Cabling."

3.6 FIRESTOPPING

A. Apply firestopping to electrical penetrations of fire-rated floor and wall assemblies to restore original fire-resistance rating of assembly according to Division 07 Section "Penetration Firestopping."

3.7 FIELD QUALITY CONTROL

A. Perform tests and inspections and prepare test reports.

B. Tests and Inspections:
   1. After installing conductors and cables and before electrical circuitry has been energized, test for compliance with requirements.
   2. Perform each visual and mechanical inspection and electrical test stated in NETA Acceptance Testing Specification. Certify compliance with test parameters.
   3. Prior to energizing cables test cable terminations for proper phase rotation.
   4. Acceptance, perform an infrared scan of each splice in cables and conductors No. 3 AWG and larger. Remove box and equipment covers so splices are accessible to portable scanner.
      a. Follow-up Infrared Scanning: Perform an additional follow-up infrared scan of each splice 11 months after date of Substantial Completion.
      b. Instrument: Use an infrared scanning device designed to measure temperature or to detect significant deviations from normal values. Provide calibration record for device.
      c. Record of Infrared Scanning: Prepare a certified report that identifies splices checked and that describes scanning results. Include notation of deficiencies detected, remedial action taken, and observations after remedial action.

C. Test Reports: Prepare a written report to record the following:
   1. Test procedures used.
   2. Test results that comply with requirements.
   3. Test results that do not comply with requirements and corrective action taken to achieve compliance with requirements.

D. Remove and replace malfunctioning units and retest as specified above.

END OF SECTION

SECTION 260526 GROUNDING AND BONDING FOR ELECTRICAL SYSTEMS

PART 1 - GENERAL

1.1 SUMMARY

A. Section Includes: Grounding systems and equipment.

1.2 ACTION SUBMITTALS

A. See Section 01 3000 – Administrative Requirements, for submittal procedures

1.3 INFORMATIONAL SUBMITTALS

A. See Section 01 3000 – Administrative Requirements, for submittal procedures

1.4 CLOSEOUT SUBMITTALS

A. See Section 01 7800 – Closeout submittals, for additional requirements.

1.5 QUALITY ASSURANCE

A. Electrical Components, Devices, and Accessories: Listed and labeled as defined in NFPA 70, Article 100, by a testing agency acceptable to authorities having jurisdiction, and marked for intended use.

B. Comply with UL 467 for grounding and bonding materials and equipment.

PART 2 - PRODUCTS

2.1 CONDUCTORS

A. Insulated Conductors: Copper wire or cable insulated for 600 V unless otherwise required by applicable Code or authorities having jurisdiction.

B. Bare Copper Conductors:
1. Solid Conductors: ASTM B 3.
2. Stranded Conductors: ASTM B 8.
3. Tinned Conductors: ASTM B 33.
4. Bonding Cable: 28 kcmil, 14 strands of No. 17 AWG conductor, 1/4 inch in diameter.

5. Bonding Conductor: Copper, stranded conductor, sized as indicated on the drawings. If not indicated, provide conductors sized as required by Article 250 of the NEC.
6. Bonding Jumper: Copper tape, braided conductors, terminated with copper ferrules; 1-5/8 inches wide and 1/16 inch thick.
7. Tinned Bonding Jumper: Tinned-copper tape, braided conductors, terminated with copper ferrules; 1-5/8 inches wide and 1/16 inch thick.

C. Bare Grounding Conductor and Conductor Protector for Wood Poles:
1. No. 4 AWG minimum, soft-drawn copper.
2. Conductor Protector: Half-round PVC or wood molding. If wood, use pressure-treated fir or cypress or cedar.

D. Grounding Bus: Rectangular bars of annealed copper sized as indicated in the details on the drawings.

E. Grounding Bus: Rectangular bars of annealed copper, 4”x12”x1/4” in cross section, unless otherwise indicated; with 6 drilled ¼ inch holes a minimum 1 inch apart and provide length needed to accommodate the number of drilled holes plus insulator mountings leaving 1 inch at each end.

2.2 CONNECTORS

A. Listed and labeled by a nationally recognized testing laboratory acceptable to authorities having jurisdiction for applications in which used, and for specific types, sizes, and combinations of conductors and other items connected.

B. Bolted Connectors for Conductors and Pipes: Copper or copper alloy, bolted compression-type, with at least two bolts.
1. Pipe Connectors: Clamp type, sized for pipe.

C. Welded Connectors: Exothermic-welding kits of types recommended by kit manufacturer for materials being joined and installation conditions.

D. Compression Connectors: Irreversible compression type made with copper extrusions, rods, and seamless tubing capable of carrying the equivalent or greater current than the capacity of the conductors; listed in conformance with UL 467.

2.3 GROUNDING ELECTRODES

A. Ground Rods: Copper-clad steel; 3/4 inch by 10 feet.

PART 3 - EXECUTION

3.1 APPLICATIONS

A. Conductors: Install solid conductor for No. 10 AWG and smaller, and stranded conductors for No. 8 AWG and larger, unless otherwise indicated.

B. Underground Grounding Conductors: Install bare copper conductor, No. 3/0 AWG minimum.
   1. Bury at least 24 inches below grade.
   2. Duct-Bank Grounding Conductor: Bury 12 inches above duct bank when indicated as part of duct-bank installation.

C. Isolated Grounding Conductors: Green-colored insulation with continuous yellow stripe. On feeders with isolated ground, identify grounding conductor where visible to normal inspection, with alternating bands of green and yellow tape, with at least three bands of green and two bands of yellow.

D. Grounding Bus: Install in electrical and telephone equipment rooms, in rooms housing service equipment, and elsewhere as indicated.
   1. Install bus on insulated spacers 1-1/2 inches, minimum, from wall 12 inches above finished floor, unless otherwise indicated.
   2. Where indicated on both sides of doorways, route bus up to top of door frame, across top of doorway, down to specified height above floor, and connect to horizontal bus.

E. Conductor Terminations and Connections:
   1. Pipe and Equipment Grounding Conductor Terminations: Bolted connectors.
   2. Underground Connections: Welded connectors, except at test wells and as otherwise indicated.
   3. Connections to Ground Rods at Test Wells: Bolted connectors.
   4. Connections to Structural Steel: Welded connectors.
   5. Connections to Reinforcing Steel in Concrete: Welded connections.
   6. Connections to Ground Bars: Two-hole compression connectors bolted to bar.
   7. Exposed Indoor Connections: Compression connectors.

3.2 GROUNDING UNDERGROUND DISTRIBUTION SYSTEM COMPONENTS

A. Comply with IEEE C2 grounding requirements.

B. Grounding Manholes and Handholes: Install a driven ground rod through manhole or handhole floor, close to wall, and set rod depth so 4 inches will extend above finished floor. If necessary, install ground rod before manhole is placed and provide No. 1/0 AWG bare, tinned-copper conductor from ground rod into manhole through a waterproof sleeve in manhole wall. Protect ground rods passing through concrete floor with a double wrapping of pressure-sensitive insulating tape or heat-shrunk insulating sleeve from 2 inches above to 6 inches below concrete. Seal floor opening with waterproof, non-shrink grout.

C. Grounding Connections to Manhole Components: Bond exposed-metal parts such as inserts, cable racks, pulling irons, ladders, and cable shields within each manhole or handhole, to ground rod or grounding conductor. Make connections with No. 4 AWG minimum, stranded, hard-drawn copper bonding conductor. Train conductors level or plumb around corners and fasten to manhole walls. Connect to cable armor and cable shields according to written instructions by manufacturer of splicing and termination kits.

D. Pad-Mounted Transformers and Switches: Install two ground rods and ground ring around the pad. Ground pad-mounted equipment and noncurrent-carrying metal items associated with substations by connecting them to underground cable and grounding electrodes. Install tinned-copper conductor not less than No. 2 AWG for ground ring and for taps to equipment grounding terminals. Bury ground ring not less than 6 inches from the foundation.

3.3 EQUIPMENT GROUNDING

A. Install insulated equipment grounding conductors with all feeders and branch circuits.

B. Metal Poles Supporting Outdoor Lighting Fixtures: Install grounding electrode and a separate insulated equipment grounding conductor in addition to grounding conductor installed with branch-circuit conductors.

3.4 INSTALLATION

A. Grounding Conductors: Route along shortest and straightest paths possible, unless otherwise indicated or required by Code. Avoid obstructing access or placing conductors where they may be subjected to strain, impact, or damage.

B. Ground Rods: Drive rods until tops are 2 inches below finished floor or final grade, unless otherwise indicated.
   1. Interconnect ground rods with grounding electrode conductor below grade and as otherwise indicated. Make connections without exposing steel or damaging coating, if any.

C. Test Wells: Provide a 24-inch long by 8-inch diameter section of PVC pipe with a removable lid for each test well location. The top of the ground rod shall be 12 inches below the top of the test well with the grounding electrode conductors exiting the bottom of the pipe.
   1. Test Wells: Install at least one test well for each service, unless otherwise indicated. Install at the ground rod electrically closest to service entrance. Set top of test well flush with finished grade or floor.

D. Bonding Straps and Jumpers: Install in locations accessible for inspection and maintenance, except where routed through short lengths of conduit.
   1. Bonding to Structure: Bond straps directly to basic structure, taking care not to penetrate any adjacent parts.

2. Bonding to Equipment Mounted on Vibration Isolation Hangers and Supports: Install bonding so vibration is not transmitted to rigidly mounted equipment.
3. Use exothermic-welded connectors for outdoor locations, if a disconnect-type connection is required, use a bolted clamp.

E. Grounding and Bonding for Piping:
1. Metal Water Service Pipe: Install insulated copper grounding conductors, in conduit, from building's main service equipment, or grounding bus, to main metal water service entrances to building. Connect grounding conductors to main metal water service pipes, use a bolted clamp connector or bolt a lug-type connector to a pipe flange by using one of the lug bolts of the flange. Where a dielectric main water fitting is installed, connect grounding conductor on street side of fitting. Bond metal grounding conductor conduit or sleeve to conductor at each end.
2. Water Meter Piping: Use braided-type bonding jumpers to electrically bypass water meters. Connect to pipe with a bolted connector.
3. Bond each aboveground portion of gas piping system downstream from equipment shutoff valve.

F. Grounding for Steel Building Structure: Install a driven ground rod at base of each corner column and at intermediate exterior columns at distances not more than 60 feet apart.

G. Ufer Ground (Concrete-Encased Grounding Electrode): Fabricate according to NFPA 70, use a minimum of 20 feet of bare copper conductor not smaller than No. 4 AWG.
1. If concrete foundation is less than 20 feet long, coil excess conductor within base of foundation.
2. Bond grounding conductor to reinforcing steel in at least four locations and to anchor bolts. Extend grounding conductor below grade and connect to building grounding grid or to grounding electrode external to concrete.

3.5 LABELING

A. Comply with requirements in Division 26 Section "Identification for Electrical Systems" Article for instruction signs. The label or its text shall be green.

3.6 FIELD QUALITY CONTROL

A. Manufacturer's Field Service: Engage a factory-authorized service representative to inspect, test, and adjust components, assemblies, and equipment installations, including connections.

B. Perform tests and inspections.
1. Manufacturer's Field Service: Engage a factory-authorized service representative to inspect components, assemblies, and equipment installations, including connections, and to assist in testing.

C. Tests and Inspections:
   1. After installing grounding system but before permanent electrical circuits have been energized, test for compliance with requirements.
   2. Inspect physical and mechanical condition. Verify tightness of accessible, bolted, electrical connections with a calibrated torque wrench according to manufacturer's written instructions.
   3. Test completed grounding system at each location where a maximum ground-resistance level is specified, at service disconnect enclosure grounding terminal at individual ground rods. Make tests at ground rods before any conductors are connected.
      a. Measure ground resistance no fewer than two full days after last trace of precipitation and without soil being moistened by any means other than natural drainage or seepage and without chemical treatment or other artificial means of reducing natural ground resistance.
      b. Perform tests by fall-of-potential method according to IEEE 81.
   4. Prepare dimensioned Drawings locating each test well, ground rod and ground-rod assembly, and other grounding electrodes. Identify each by letter in alphabetical order, and key to the record of tests and observations. Include the number of rods driven and their depth at each location, and include observations of weather and other phenomena that may affect test results. Describe measures taken to improve test results.

D. Grounding system will be considered defective if it does not pass tests and inspections.

E. Prepare test and inspection reports.

F. Report measured ground resistances that exceed 5ohms.

G. Excessive Ground Resistance: If resistance to ground exceeds specified values, notify Architect promptly and include recommendations to reduce ground resistance.

END OF SECTION

PART 1 - GENERAL

1.1 SUMMARY

A. Section Includes:
1. Metal conduits, tubing, and fittings.
2. Nonmetal conduits, tubing, and fittings.
3. Metal wireways and auxiliary gutters.
4. Nonmetal wireways and auxiliary gutters.
5. Surface raceways.
6. Boxes, enclosures, and cabinets.
7. Handholes and boxes for exterior underground cabling.

1.2 DEFINITIONS

A. EMT: Electrical metallic tubing.

B. ENT: Electrical nonmetallic tubing.

C. FMC: Flexible metal conduit.

D. GRC: Galvanized rigid steel conduit.

E. LFMC: Liquidtight flexible metal conduit.

F. LFNC: Liquidtight flexible nonmetallic conduit.

G. RNC: Rigid nonmetallic conduit.

1.3 ACTION SUBMITTALS

A. See Section 01 3000 – Administrative Requirements, for submittal procedures

1.4 INFORMATIONAL SUBMITTALS

A. See Section 01 3000 – Administrative Requirements, for submittal procedures

1.5 QUALITY ASSURANCE

A. Electrical Components, Devices, and Accessories: Listed and labeled as defined in NFPA 70, Article 100, by a testing agency acceptable to authorities having jurisdiction, and marked for intended use.

B. Comply with NFPA 70.

PART 2 - PRODUCTS

2.1 METAL CONDUIT AND TUBING

A. Manufacturers: Subject to compliance with requirements, available manufacturers offering products that may be incorporated into the Work include, but are not limited to, the following:
   1. AFC Cable Systems, Inc.
   2. Allied Tube & Conduit; a Tyco International Ltd. Co.
   3. Anamet Electrical, Inc.
   4. Electri-Flex Company.
   5. O-Z/Gedney; a brand of EGS Electrical Group.
   6. Picoma Industries, a subsidiary of Mueller Water Products, Inc.
   7. Republic Conduit.
   8. Robroy Industries.
   9. Southwire Company.
   10. Thomas & Betts Corporation.
   11. Western Tube and Conduit Corporation.
   12. Wheatland Tube Company; a division of John Maneely Company.

B. Listing and Labeling: Metal conduits, tubing, and fittings shall be listed and labeled as defined in NFPA 70, by a qualified testing agency, and marked for intended location and application.

C. GRC: Comply with ANSI C80.1 and UL 6.

D. EMT: Comply with ANSI C80.3 and UL 797.

E. FMC: Comply with UL 1; zinc-coated steel.

F. LFMC: Flexible steel conduit with PVC jacket and complying with UL 360.

G. Fittings for Metal Conduit: Comply with NEMA FB 1 and UL 514B.
   1. Conduit Fittings for Hazardous (Classified) Locations: Comply with UL 886 and NFPA 70.
   2. Fittings for EMT:
      a. Material: Steel.
      b. Type: Setscrew.
   3. Expansion Fittings: PVC or steel to match conduit type, complying with UL 651, rated for environmental conditions where installed, and including flexible external bonding jumper.
   4. Coating for Fittings for PVC-Coated Conduit: Minimum thickness of 0.040 inch, with overlapping sleeves protecting threaded joints.

H. Joint Compound for GRC: Approved, as defined in NFPA 70, by authorities having jurisdiction for use in conduit assemblies, and compounded for use to lubricate and protect threaded conduit joints from corrosion and to enhance their conductivity.

2.2 NONMETALLIC CONDUIT AND TUBING

A. Available Manufacturers: Subject to compliance with requirements, manufacturers offering products that may be incorporated into the Work include, but are not limited to, the following:
   1. AFC Cable Systems, Inc.
   2. Anamet Electrical, Inc.
   3. Arnco Corporation.
   4. CANTEX Inc.
   5. CertainTeed Corp.
   6. Condux International, Inc.
   7. Electri-Flex Company.
   8. Kraloy.
   9. Lamson & Sessions; Carlon Electrical Products.
   10. Niedax-Kleinhuis USA, Inc.
   11. RACO; a Hubbell company.
   12. Thomas & Betts Corporation.

B. Listing and Labeling: Nonmetallic conduits, tubing, and fittings shall be listed and labeled as defined in NFPA 70, by a qualified testing agency, and marked for intended location and application.

C. ENT: Comply with NEMA TC 13 and UL 1653.

D. RNC: RNC Schedule 40, complying with NEMA TC 2 and UL 651 unless otherwise indicated.

E. LFNC: Comply with UL 1660.

F. Rigid HDPE: Comply with UL 651A.

G. Continuous HDPE: Comply with UL 651B.

H. RTRC: Comply with UL 1684A and NEMA TC 14.

I. Fittings for ENT and RNC: Comply with NEMA TC 3; match to conduit or tubing type and material.

J. Fittings for LFNC: Comply with UL 514B.

K. Solvent cements and adhesive primers shall have a VOC content of 510 and 550 g/L or less, respectively, when calculated according to 40 CFR 59, Subpart D (EPA Method 24).

L. Solvent cements and adhesive primers shall comply with the testing and product requirements of the California Department of Health Services' "Standard Practice for the Testing of Volatile Organic Emissions from Various Sources Using Small-Scale Environmental Chambers."

2.3 METAL WIREWAYS AND AUXILIARY GUTTERS

A. Available Manufacturers: Subject to compliance with requirements, manufacturers offering products that may be incorporated into the Work include, but are not limited to, the following:
   1. Cooper B-Line, Inc.
   2. Hoffman; a Pentair company.
   3. Mono-Systems, Inc.
   4. Square D; a brand of Schneider Electric.

B. Description: Sheet metal, complying with UL 870 and NEMA 250, Type 1 indoors or Type 3R outdoorsoror unless otherwise indicated on the drawings, and sized according to NFPA 70.
   1. Metal wireways installed outdoors shall be listed and labeled as defined in NFPA 70, by a qualified testing agency, and marked for intended location and application.

C. Fittings and Accessories: Include covers, couplings, offsets, elbows, expansion joints, adapters, hold-down straps, end caps, and other fittings to match and mate with wireways as required for complete system.

D. Wireway Covers: Screw-cover type or unless otherwise indicated.

E. Finish: Manufacturer's standard enamel finish.

2.4 BOXES, ENCLOSURES, AND CABINETS

A. Available Manufacturers: Subject to compliance with requirements provide products from one of the following:
   1. Cooper Technologies Company; Cooper Crouse-Hinds.
   2. EGS/Appleton Electric.
   3. Erickson Electrical Equipment Company.
   4. FSR Inc.
   5. Hoffman; a Pentair company.
   6. Hubbell Incorporated; Killark Division.
   7. Kraloy.
   8. Milbank Manufacturing Co.
   9. Mono-Systems, Inc.
   10. O-Z/Gedney; a brand of EGS Electrical Group.
   11. RACO; a Hubbell Company.
   12. Robroy Industries.
   13. Thomas & Betts Corporation.
   14. Wiremold / Legrand.

B. General Requirements for Boxes, Enclosures, and Cabinets: Boxes, enclosures, and cabinets installed in wet locations shall be listed for use in wet locations.

C. Sheet Metal Outlet and Device Boxes: Comply with NEMA OS 1 and UL 514A.

D. Cast-Metal Outlet and Device Boxes: Comply with NEMA FB 1, aluminum, Type FD, with gasketed cover.

E. Nonmetallic Outlet and Device Boxes: Comply with NEMA OS 2 and UL 514C.

F. Luminaire Outlet Boxes: Nonadjustable, designed for attachment of luminaire weighing 50 lb. Outlet boxes designed for attachment of luminaires weighing more than 50 lb shall be listed and marked for the maximum allowable weight.

G. Paddle Fan Outlet Boxes: Nonadjustable, designed for attachment of paddle fan weighing 70 lb.
   1. Listing and Labeling: Paddle fan outlet boxes shall be listed and labeled as defined in NFPA 70, by a qualified testing agency, and marked for intended location and application.

H. Small Sheet Metal Pull and Junction Boxes: NEMA OS 1.

I. Cast-Metal Access, Pull, and Junction Boxes: Comply with NEMA FB 1 and UL 1773, cast aluminum with gasketed cover.

J. Box extensions used to accommodate new building finishes shall be of same material as recessed box.

K. Device Box Dimensions: 4 inches square by 2-1/8 inches deep.

L. Gangable boxes are allowed.

M. Hinged-Cover Enclosures: Comply with UL 50 and NEMA 250, Type 3R with continuous-hinge cover with flush latch unless otherwise indicated.
   1. Metal Enclosures: Steel, finished inside and out with manufacturer's standard enamel.
   2. Nonmetallic Enclosures: Fiberglass.
   3. Interior Panels: Steel; all sides finished with manufacturer's standard enamel.

N. Cabinets:
   1. NEMA 250, Type 3R galvanized-steel box with removable interior panel and removable front, finished inside and out with manufacturer's standard enamel.
   2. Hinged door in front cover with flush latch and concealed hinge.
   3. Key latch to match panelboards.
   4. Metal barriers to separate wiring of different systems and voltage.
   5. Accessory feet where required for freestanding equipment.
   6. Nonmetallic cabinets shall be listed and labeled as defined in NFPA 70, by a qualified testing agency, and marked for intended location and application.

2.5 HANDHOLES AND BOXES FOR EXTERIOR UNDERGROUND WIRING

A. General Requirements for Handholes and Boxes:
   1. Boxes and handholes for use in underground systems shall be designed and identified as defined in NFPA 70, for intended location and application.
   2. Boxes installed in wet areas shall be listed and labeled as defined in NFPA 70, by a qualified testing agency, and marked for intended location and application.

B. Polymer-Concrete Handholes and Boxes with Polymer-Concrete Cover: Molded of sand and aggregate, bound together with polymer resin, and reinforced with steel, fiberglass, or a combination of the two.
   1. Manufacturers: Subject to compliance with requirements, provide products by one of the following:
      a. Armorcast Products Company.
      b. Quazite
      c. Carson Industries LLC.
      d. CDR Systems Corporation; Hubbell Power Systems.
      e. NewBasis.
      f. Oldcastle Precast, Inc.; Christy Concrete Products.
      g. Synertech Moulded Products; a division of Oldcastle Precast, Inc.
   2. Standard: Comply with SCTE 77.
   3. Configuration: Designed for flush burial with open bottom unless otherwise indicated.
   4. Cover: Weatherproof, secured by tamper-resistant locking devices and having structural load rating consistent with enclosure and handhole location.
   5. Cover Finish: Nonskid finish shall have a minimum coefficient of friction of 0.50.
   6. Cover Legend: Molded lettering, as indicated for each service..
   7. Conduit Entrance Provisions: Conduit-terminating fittings shall mate with entering ducts for secure, fixed installation in enclosure wall.
   8. Handholes 12 Inches Wide by 24 Inches Long and Larger: Have inserts for cable racks and pulling-in irons installed before concrete is poured.

C. Fiberglass Handholes and Boxes: Molded of fiberglass-reinforced polyester resin, with frame and covers of fiberglass.
   1. Manufacturers: Subject to compliance with requirements, provide products by one of the following:
      a. Armorcast Products Company.
      b. Carson Industries LLC.
      c. CDR Systems Corporation; Hubbell Power Systems.
      d. NewBasis.
      e. Nordic Fiberglass, Inc.
      f. Oldcastle Precast, Inc.; Christy Concrete Products.
      g. Synertech Moulded Products; a division of Oldcastle Precast, Inc.
   2. Standard: Comply with SCTE 77.
   3. Color of Frame and Cover: Gray.
   4. Configuration: Designed for flush burial with open bottom unless otherwise indicated.
   5. Cover: Weatherproof, secured by tamper-resistant locking devices and having structural load rating consistent with enclosure and handhole location.

6. Cover Finish: Nonskid finish shall have a minimum coefficient of friction of 0.50.
7. Cover Legend: Molded lettering, as indicated for each service..
8. Conduit Entrance Provisions: Conduit-terminating fittings shall mate with entering ducts for secure, fixed installation in enclosure wall.
9. Handholes 12 Inches Wide by 24 Inches Long and Larger: Have inserts for cable racks and pulling-in irons installed before concrete is poured.

2.6 SOURCE QUALITY CONTROL FOR UNDERGROUND ENCLOSURES

A. Handhole and Pull-Box Prototype Test: Test prototypes of handholes and boxes for compliance with SCTE 77. Strength tests shall be for specified tier ratings of products supplied.
   1. Tests of materials shall be performed by a independent testing agency.
   2. Strength tests of complete boxes and covers shall be by either an independent testing agency or manufacturer. A qualified registered professional engineer shall certify tests by manufacturer.
   3. Testing machine pressure gages shall have current calibration certification complying with ISO 9000 and ISO 10012, and traceable to NIST standards.

PART 3 - EXECUTION

3.1 RACEWAY APPLICATION

A. Outdoors: Apply raceway products as specified below, unless otherwise indicated:
   1. Exposed Conduit: GRC .
   2. Concealed Conduit, Aboveground: EMT.
   3. Underground Conduit: RNC, Type EPC-40-PVC, direct buried.
   4. Underground Conduit Penetrating Exterior Wall PVC coated: Rigid steel conduit extending 5-feet on either side of the wall.
   5. Connection to Vibrating Equipment (Including Transformers and Hydraulic, Pneumatic, Electric Solenoid, or Motor-Driven Equipment): LFMC.
   6. Boxes and Enclosures, Aboveground: NEMA 250, Type 3R.
   7. Application of Handholes and Boxes for Underground Wiring:
      a. Handholes and Pull Boxes in Driveway, Parking Lot, and Off-Roadway Locations, Subject to Occasional, Non-deliberate Loading by Heavy Vehicles: Polymer concrete, SCTE 77, Tier 15 structural load rating.
      b. Handholes and Pull Boxes in Sidewalk and Similar Applications with a Safety Factor for Non-deliberate Loading by Vehicles: Heavy-duty fiberglass units with polymer-concrete frame and cover, SCTE 77, Tier 8 structural load rating.
      c. Handholes and Pull Boxes Subject to Light-Duty Pedestrian Traffic Only: Fiberglass-reinforced polyester resin, structurally tested according to SCTE 77 with 3000-lbf vertical loading.

B. Indoors: Apply raceway products as specified below unless otherwise indicated:
   1. Exposed, Not Subject to Physical Damage: EMT.

2. Exposed, Not Subject to Severe Physical Damage: EMT.
3. Exposed and Subject to Severe Physical Damage: GRC. Raceway locations include the following:
   a. Loading dock.
   b. Corridors used for traffic of mechanized carts, forklifts, and pallet-handling units.
   c. Mechanical rooms.
4. Concealed in Ceilings and Interior Walls and Partitions: EMT or FMC
5. Connection to Vibrating Equipment (Including Transformers and Hydraulic, Pneumatic, Electric Solenoid, or Motor-Driven Equipment): FMC, except use LFMC in damp or wet locations.
6. Damp or Wet Locations: GRC.
7. Boxes and Enclosures: NEMA 250, Type 1, except use NEMA 250, Type 4, nonmetallic in damp or wet locations.

C. Minimum Raceway Size: 3/4-inch trade size.

D. Raceway Fittings: Compatible with raceways and suitable for use and location.
1. Rigid and Intermediate Steel Conduit: Use threaded rigid steel conduit fittings, unless otherwise indicated.
2. PVC Externally Coated, Rigid Steel Conduits: Use only fittings listed for use with this type of conduit. Patch and seal all joints, nicks, and scrapes in PVC coating after installing conduits and fittings. Use sealant recommended by fitting manufacturer and apply in thickness and number of coats recommended by manufacturer.
3. EMT Conduits: Use steel set-screw fittings for accessible concealed joints in dry indoor locations and steel compression type fittings for all other locations.
4. Flexible Conduit: Use only fittings listed for use with flexible conduit. Comply with NEMA FB 2.20.

E. Install surface raceways only where indicated on Drawings.

F. Do not install nonmetallic conduit where ambient temperature exceeds 120 deg F.

3.2 INSTALLATION

A. Comply with NECA 1 and NECA 101 for installation requirements except where requirements on Drawings or in this article are stricter. Comply with NFPA 70 limitations for types of raceways allowed in specific occupancies and number of floors.

B. Keep raceways at least 6 inches away from parallel runs of flues and steam or hot-water pipes. Install horizontal raceway runs above water and steam piping.

C. Complete raceway installation before starting conductor installation.

D. Comply with requirements in Division 26 Section "Hangers and Supports for Electrical Systems" for hangers and supports.

E. Arrange stub-ups so curved portions of bends are not visible above finished slab.

F. Install no more than the equivalent of three 90-degree bends in any conduit run except for control wiring conduits, for which fewer bends are allowed. Support within 12 inches of changes in direction.

G. Conceal conduit and EMT within finished walls, ceilings, and floors unless otherwise indicated. Install conduits parallel or perpendicular to building lines.

H. A. Support conduit within 12 inches of enclosures to which attached.

I. Raceways Embedded in Slabs:
   1. Run conduit larger than 1-inch trade size, parallel or at right angles to main reinforcement. Where at right angles to reinforcement, place conduit close to slab support. Secure raceways to reinforcement at maximum10-foot intervals.
   2. Arrange raceways to cross building expansion joints at right angles with expansion fittings.
   3.
   4. Arrange raceways to keep a minimum of 2 inches of concrete cover in all directions.
   5. Do not embed threadless fittings in concrete unless specifically approved by Architect for each specific location.
   6. Change from ENT to GRC before rising above floor.

J. Stub-ups to Above Recessed Ceilings:
   1. Use EMT or RMC for raceways.
   2. Use a conduit bushing or insulated fitting to terminate stub-ups not terminated in hubs or in an enclosure.

K. Threaded Conduit Joints, Exposed to Wet, Damp, Corrosive, or Outdoor Conditions: Apply listed compound to threads of raceway and fittings before making up joints. Follow compound manufacturer's written instructions.

L. Raceway Terminations at Locations Subject to Moisture or Vibration: Use insulating bushings to protect conductors including conductors smaller than No. 4 AWG.

M. Terminate threaded conduits into threaded hubs or with locknuts on inside and outside of boxes or cabinets. Install bushings on conduits up to 1-1/4-inch trade size and insulated throat metal bushings on 1-1/2-inch trade size and larger conduits terminated with locknuts. Install insulated throat metal grounding bushings on service conduits.

N. Install raceways square to the enclosure and terminate at enclosures with locknuts. Install locknuts hand tight plus 1/4 turn more.

O. Do not rely on locknuts to penetrate nonconductive coatings on enclosures. Remove coatings in the locknut area prior to assembling conduit to enclosure to assure a continuous ground path.

P. Cut conduit perpendicular to the length. For conduits 2-inch trade size and larger, use roll cutter or a guide to make cut straight and perpendicular to the length.

Q. Install pull wires in empty raceways. Use polypropylene or monofilament plastic line with not less than 200-lb tensile strength. Leave at least 12 inches of slack at each end of pull wire. Cap underground raceways designated as spare above grade alongside raceways in use.

R. Install raceway sealing fittings at accessible locations according to NFPA 70 and fill them with listed sealing compound. For concealed raceways, install each fitting in a flush steel box with a blank cover plate having a finish similar to that of adjacent plates or surfaces. Install raceway sealing fittings according to NFPA 70.

S. Install devices to seal raceway interiors at accessible locations. Locate seals so no fittings or boxes are between the seal and the following changes of environments. Seal the interior of all raceways at the following points:
   1. Where conduits pass from warm to cold locations, such as boundaries of refrigerated spaces.
   2. Where an underground service raceway enters a building or structure.
   3. Where otherwise required by NFPA 70.

T. Comply with manufacturer's written instructions for solvent welding RNC and fittings.

U. Expansion-Joint Fittings:
   1. Install in each run of aboveground RNC that is located where environmental temperature change may exceed 30 deg F and that has straight-run length that exceeds 25 feet. Install in each run of aboveground RMC conduit that is located where environmental temperature change may exceed 100 deg F and that has straight-run length that exceeds 100 feet.
   2. Install type and quantity of fittings that accommodate temperature change listed for each of the following locations:
      a. Outdoor Locations Not Exposed to Direct Sunlight: 125 deg F temperature change.
      b. Outdoor Locations Exposed to Direct Sunlight: 155 deg F temperature change.
      c. Indoor Spaces Connected with Outdoors without Physical Separation: 125 deg F temperature change.
   3. Install fitting(s) that provide expansion and contraction for at least 0.00041 inch per foot of length of straight run per deg F of temperature change for PVC conduits. Install fitting(s) that provide expansion and contraction for at least 0.000078 inch per foot of length of straight run per deg F of temperature change for metal conduits.
   4. Install expansion fittings at all locations where conduits cross building or structure expansion joints.
   5. Install each expansion-joint fitting with position, mounting, and piston setting selected according to manufacturer's written instructions for conditions at specific location at time of installation. Install conduit supports to allow for expansion movement.

V. Flexible Conduit Connections: Comply with NEMA RV 3. Use a maximum of 60 inches of flexible conduit for recessed and semi-recessed luminaires, equipment subject to vibration, noise transmission, or movement; and for transformers and motors.
   1. Use LFMC in damp or wet locations subject to severe physical damage.

2. Use LFMC or LFNC in damp or wet locations not subject to severe physical damage.

W. Mount boxes at heights indicated on Drawings. If mounting heights of boxes are not individually indicated, give priority to ADA requirements. Install boxes with height measured to center of box unless otherwise indicated.

X. Recessed Boxes in Masonry Walls: Saw-cut opening for box in center of cell of masonry block, and install box flush with surface of wall. Prepare block surfaces to provide a flat surface for a raintight connection between box and cover plate or supported equipment and box.

Y. Horizontally separate boxes mounted on opposite sides of walls so they are not in the same vertical channel.

Z. Locate boxes so that cover or plate will not span different building finishes.

AA. Support boxes of three gangs or more from more than one side by spanning two framing members or mounting on brackets specifically designed for the purpose.

BB. Fasten junction and pull boxes to or support from building structure. Do not support boxes by conduits.

CC. Set metal floor boxes level and flush with finished floor surface.

DD. Set nonmetallic floor boxes level. Trim after installation to fit flush with finished floor surface.

3.3 INSTALLATION OF UNDERGROUND CONDUIT

A. Direct-Buried Conduit:
1. Excavate trench bottom to provide firm and uniform support for conduit. Prepare trench bottom as specified in Division 26 Section "Common Work Results for Electrical" for pipe less than 6 inches in nominal diameter.
2. Install backfill as specified in Division 26 "Common Work Results for Electrical".
3. After installing conduit, backfill and compact. Start at tie-in point, and work toward end of conduit run, leaving conduit at end of run free to move with expansion and contraction as temperature changes during this process. Firmly hand tamp backfill around conduit to provide maximum supporting strength. After placing controlled backfill to within 12 inches of finished grade, make final conduit connection at end of run and complete backfilling with normal compaction.
4. Install manufactured rigid steel conduit elbows for stub-ups at poles and equipment and at building entrances through the floor.
   a. Couple steel conduits to ducts with adapters designed for this purpose, and encase coupling with 3 inches of concrete for a minimum of 12 inches on each side of the coupling.

b. For stub-ups at equipment mounted on outdoor concrete bases and where conduits penetrate building foundations, extend steel conduit horizontally a minimum of 60 inches from edge of foundation or equipment base. Install insulated grounding bushings on terminations at equipment.

5. Warning Planks: Bury warning planks approximately 12 inches above direct-buried conduits but a minimum of 6 inches below grade. Align planks along centerline of conduit.

6. Underground Warning Tape: Comply with requirements in Division 26 Section "Identification for Electrical Systems."

3.4 INSTALLATION OF UNDERGROUND HANDHOLES AND BOXES

A. Install handholes and boxes level and plumb and with orientation and depth coordinated with connecting conduits to minimize bends and deflections required for proper entrances.

B. Unless otherwise indicated, support units on a level bed of crushed stone or gravel, graded from 1/2-inch sieve to No. 4 sieve and compacted to same density as adjacent undisturbed earth.

C. Elevation: In paved areas, set so cover surface will be flush with finished grade. Set covers of other enclosures 1 inch above finished grade.

D. Install handholes and boxes with bottom below the frost line, below grade.

E. Install removable hardware, including pulling eyes, cable stanchions, cable arms, and insulators, as required for installation and support of cables and conductors and as indicated. Select arm lengths to be long enough to provide spare space for future cables, but short enough to preserve adequate working clearances in the enclosure.

F. Field-cut openings for conduits according to enclosure manufacturer's written instructions. Cut wall of enclosure with a tool designed for material to be cut. Size holes for terminating fittings to be used, and seal around penetrations after fittings are installed.

3.5 SLEEVE AND SLEEVE-SEAL INSTALLATION FOR ELECTRICAL PENETRATIONS

A. Install sleeves and sleeve seals at penetrations of exterior floor and wall assemblies. Comply with requirements in Division 26 Section "Sleeves and Sleeve Seals for Electrical Raceways and Cabling."

3.6 FIRESTOPPING

A. Install firestopping at penetrations of fire-rated floor and wall assemblies. Comply with requirements in Division 07 Section "Penetration Firestopping."

B. General: Install penetration firestopping to comply with manufacturer's written installation instructions and published drawings for products and applications indicated.

C. Install forming materials and other accessories of types required to support fill materials during their application and in the position needed to produce cross-sectional shapes and depths required to achieve fire ratings indicated.
   1. After installing fill materials and allowing them to fully cure, remove combustible forming materials and other accessories not indicated as permanent components of firestopping.

D. Install fill materials for firestopping by proven techniques to produce the following results:
   1. Fill voids and cavities formed by openings, forming materials, accessories, and penetrating items as required to achieve fire-resistance ratings indicated.
   2. Apply materials so they contact and adhere to substrates formed by openings and penetrating items.
   3. For fill materials that will remain exposed after completing the Work, finish to produce smooth, uniform surfaces that are flush with adjoining finishes.

E. Identify penetration firestopping with preprinted metal or plastic labels. Attach labels permanently to surfaces adjacent to and within 6 inches of firestopping edge so labels will be visible to anyone seeking to remove penetrating items or firestopping. Use mechanical fasteners or self-adhering-type labels with adhesives capable of permanently bonding labels to surfaces on which labels are placed. Include the following information on labels:
   1. The words "Warning - Penetration Firestopping - Do Not Disturb. Notify Building Management of Any Damage."
   2. Contractor's name, address, and phone number.
   3. Designation of applicable testing and inspecting agency.
   4. Date of installation.
   5. Manufacturer's name.
   6. Installer's name.

F. Clean off excess fill materials adjacent to openings as the Work progresses by methods and with cleaning materials that are approved in writing by penetration firestopping manufacturers and that do not damage materials in which openings occur.

G. Provide final protection and maintain conditions during and after installation that ensure that penetration firestopping is without damage or deterioration at time of Substantial Completion. If, despite such protection, damage or deterioration occurs, immediately cut out and remove damaged or deteriorated penetration firestopping and install new materials to produce systems complying with specified requirements.

3.7 PROTECTION

A. Protect coatings, finishes, and cabinets from damage and deterioration.
   1. Repair damage to galvanized finishes with zinc-rich paint recommended by manufacturer.
   2. Repair damage to PVC coatings or paint finishes with matching touchup coating recommended by manufacturer.

END OF SECTION

SECTION 260544 **SLEEVES AND SLEEVE SEALS FOR ELECTRICAL RACEWAYS AND CABLING**

PART 1 - GENERAL

1.1 SUMMARY

A. Section Includes:
1. Sleeves for raceway and cable penetration of non-fire-rated construction walls and floors.
2. Sleeve-seal systems.
3. Sleeve-seal fittings.
4. Grout.
5. Silicone sealants.

1.2 ACTION SUBMITTALS

A. See Section 01 3000 – Administrative Requirements, for submittal procedures

PART 2 - PRODUCTS

2.1 SLEEVES

A. Wall Sleeves:
1. Steel Pipe Sleeves: ASTM A 53/A 53M, Type E, Grade B, Schedule 40, zinc coated, plain ends.
2. Cast-Iron Pipe Sleeves: Cast or fabricated "wall pipe," equivalent to ductile-iron pressure pipe, with plain ends and integral waterstop unless otherwise indicated.

B. Sleeves for Conduits Penetrating Non-Fire-Rated Gypsum Board Assemblies: Galvanized-steel sheet; 0.0239-inch minimum thickness; round tube closed with welded longitudinal joint, with tabs for screw-fastening the sleeve to the board.

C. PVC-Pipe Sleeves: ASTM D 1785, Schedule 40.

D. Molded-PVC Sleeves: With nailing flange for attaching to wooden forms.

E. Molded-PE or -PP Sleeves: Removable, tapered-cup shaped, and smooth outer surface with nailing flange for attaching to wooden forms.

F. Sleeves for Rectangular Openings:
   1. Material: Galvanized sheet steel.
   2. Minimum Metal Thickness:
      a. For sleeve cross-section rectangle perimeter less than 50 inches and with no side larger than 16 inches, thickness shall be 0.052 inch.
      b. For sleeve cross-section rectangle perimeter 50 inches or more and one or more sides larger than 16 inches, thickness shall be 0.138 inch.

2.2 SLEEVE-SEAL SYSTEMS

A. Description: Modular sealing device, designed for field assembly, to fill annular space between sleeve and raceway or cable.
   1. Manufacturers: Subject to compliance with requirements, provide products by one of the following:
      a. Advance Products & Systems, Inc.
      b. CALPICO, Inc.
      c. Metraflex Company (The).
      d. Pipeline Seal and Insulator, Inc.
      e. Proco Products, Inc.
   2. Sealing Elements: EPDM or rubber interlocking links shaped to fit surface of pipe. Include type and number required for pipe material and size of pipe.
   3. Pressure Plates: Carbon steel.
   4. Connecting Bolts and Nuts: Carbon steel, with corrosion-resistant coating, of length required to secure pressure plates to sealing elements.

2.3 SLEEVE-SEAL FITTINGS

A. Description: Manufactured plastic, sleeve-type, waterstop assembly made for embedding in concrete slab or wall. Unit shall have plastic or rubber waterstop collar with center opening to match piping OD.
   1. Manufacturers: Subject to compliance with requirements, provide products by one of the following:
      a. Presealed Systems.

2.4 GROUT

A. Description: Nonshrink; recommended for interior and exterior sealing openings in non-fire-rated walls or floors.

B. Standard: ASTM C 1107/C 1107M, Grade B, post-hardening and volume-adjusting, dry, hydraulic-cement grout.

C. Design Mix: 5000-psi, 28-day compressive strength.

D. Packaging: Premixed and factory packaged.

2.5 SILICONE SEALANTS

A. Silicone Sealants: Single-component, silicone-based, neutral-curing elastomeric sealants of grade indicated below.
   1. Grade: Pourable (self-leveling) formulation for openings in floors and other horizontal surfaces that are not fire rated.
   2. Sealant shall comply with the testing and product requirements of the California Department of Health Services' "Standard Practice for the Testing of Volatile Organic Emissions from Various Sources Using Small-Scale Environmental Chambers."

B. Silicone Foams: Multicomponent, silicone-based liquid elastomers that, when mixed, expand and cure in place to produce a flexible, nonshrinking foam.

PART 3 - EXECUTION

3.1 SLEEVE INSTALLATION FOR NON-FIRE-RATED ELECTRICAL PENETRATIONS

A. Comply with NECA 1.

B. Comply with NEMA VE 2 for cable tray and cable penetrations.

C. Sleeves for Conduits Penetrating Above-Grade Non-Fire-Rated Concrete and Masonry-Unit Floors and Walls:
   1. Interior Penetrations of Non-Fire-Rated Walls and Floors:
      a. Seal annular space between sleeve and raceway or cable, using joint sealant appropriate for size, depth, and location of joint. Comply with requirements in Division 07 Section "Joint Sealants."
      b. Seal space outside of sleeves with mortar or grout. Pack sealing material solidly between sleeve and wall so no voids remain. Tool exposed surfaces smooth; protect material while curing.
   2. Use pipe sleeves unless penetration arrangement requires rectangular sleeved opening.
   3. Size pipe sleeves to provide 1/4-inch annular clear space between sleeve and raceway or cable unless sleeve seal is to be installed.
   4. Install sleeves for wall penetrations unless core-drilled holes or formed openings are used. Install sleeves during erection of walls. Cut sleeves to length for mounting flush with both surfaces of walls. Deburr after cutting.
   5. Install sleeves for floor penetrations. Extend sleeves installed in floors 2 inches above finished floor level. Install sleeves during erection of floors.

D. Sleeves for Conduits Penetrating Non-Fire-Rated Gypsum Board Assemblies:
   1. Use circular metal sleeves unless penetration arrangement requires rectangular sleeved opening.
   2. Seal space outside of sleeves with approved joint compound for gypsum board assemblies.

E. Roof-Penetration Sleeves: Seal penetration of individual raceways and cables with flexible boot-type flashing units applied in coordination with roofing work.

F. Aboveground, Exterior-Wall Penetrations: Seal penetrations using [steel] [cast-iron] pipe sleeves and mechanical sleeve seals. Select sleeve size to allow for 1-inch annular clear space between pipe and sleeve for installing mechanical sleeve seals.

G. Underground, Exterior-Wall and Floor Penetrations: Install cast-iron pipe sleeves. Size sleeves to allow for 1-inch annular clear space between raceway or cable and sleeve for installing sleeve-seal system.

3.2 SLEEVE-SEAL-SYSTEM INSTALLATION

A. Install sleeve-seal systems in sleeves in exterior concrete walls and slabs-on-grade at raceway entries into building.

B. Install type and number of sealing elements recommended by manufacturer for raceway or cable material and size. Position raceway or cable in center of sleeve. Assemble mechanical sleeve seals and install in annular space between raceway or cable and sleeve. Tighten bolts against pressure plates that cause sealing elements to expand and make watertight seal.

3.3 SLEEVE-SEAL-FITTING INSTALLATION

A. Install sleeve-seal fittings in new walls and slabs as they are constructed.

B. Assemble fitting components of length to be flush with both surfaces of concrete slabs and walls. Position waterstop flange to be centered in concrete slab or wall.

C. Secure nailing flanges to concrete forms.

D. Using grout, seal the space around outside of sleeve-seal fittings.

END OF SECTION

PART 1 - GENERAL

1.1 SUMMARY

A. Section Includes:
1. Distribution panelboards.
2. Lighting and appliance branch-circuit panelboards.

1.2 ACTION SUBMITTALS

A. See Section 01 3000 – Administrative Requirements, for submittal procedures

1.3 INFORMATIONAL SUBMITTALS

A. Panelboard Schedules: For installation in panelboards.

1.4 CLOSEOUT SUBMITTALS

A. See Section 01 7800 – Closeout Submittals, for submittal requirements and procedures

1.5 MAINTENANCE MATERIAL SUBMITTALS

A. Furnish extra materials that match products installed and that are packaged with protective covering for storage and identified with labels describing contents.
1. Keys: Two spares for each type of panelboard cabinet lock.
2. Circuit Breakers Including GFCI and Ground Fault Equipment Protection (GFEP) Types: Two spares for each panelboard.
3. Fuses for Fused Switches: Equal to 10 percent of quantity installed for each size and type, but no fewer than three of each size and type.
4. Fuses for Fused Power-Circuit Devices: Equal to 10 percent of quantity installed for each size and type, but no fewer than three of each size and type.

1.6 QUALITY ASSURANCE

A. Source Limitations: Obtain panelboards, overcurrent protective devices, components, and accessories from single source from single manufacturer.

B. Product Selection for Restricted Space: Drawings indicate maximum dimensions for panelboards including clearances between panelboards and adjacent surfaces and other items. Comply with indicated maximum dimensions.

C. Electrical Components, Devices, and Accessories: Listed and labeled as defined in NFPA 70, by a qualified testing agency, and marked for intended location and application.

D. Comply with NEMA PB 1.

E. Comply with NFPA 70.

1.7 DELIVERY, STORAGE, AND HANDLING

A. Remove loose packing and flammable materials from inside panelboards; install temporary electric heating (250 W per panelboard) to prevent condensation.

B. Handle and prepare panelboards for installation according to NECA 407.

1.8 PROJECT CONDITIONS

A. Environmental Limitations:
   1. Do not deliver or install panelboards until spaces are enclosed and weathertight, wet work in spaces is complete and dry, work above panelboards is complete, and temporary HVAC system is operating and maintaining ambient temperature and humidity conditions at occupancy levels during the remainder of the construction period.
   2. Rate equipment for continuous operation under the following conditions unless otherwise indicated:
      a. Ambient Temperature: Not exceeding minus 22 deg F to plus 104 deg F.
      b. Altitude: Not exceeding 6600 feet.

B. Service Conditions: NEMA PB 1, usual service conditions, as follows:
   1. Ambient temperatures within limits specified.
   2. Altitude not exceeding 6600 feet.

C. Interruption of Existing Electric Service: Do not interrupt electric service to facilities occupied by Owner or others unless permitted under the following conditions and then only after arranging to provide temporary electric service according to requirements indicated:
   1. Notify Construction Manager no fewer than two days in advance of proposed interruption of electric service.
   2. Do not proceed with interruption of electric service without Construction Manager's written permission.
   3. Comply with NFPA 70E.

1.9 COORDINATION

A. Coordinate layout and installation of panelboards and components with other construction that penetrates walls or is supported by them, including electrical and other types of equipment, raceways, piping, encumbrances to workspace clearance requirements, and adjacent surfaces. Maintain required workspace clearances and required clearances for equipment access doors and panels.

B. Coordinate sizes and locations of concrete bases with actual equipment provided. Cast anchor-bolt inserts into bases. Concrete, reinforcement, and formwork requirements are specified in Division 03.

1.10 WARRANTY

A. See Section 01 7400 – Warranties and Bonds for information about Guarantees

PART 2 - PRODUCTS

2.1 GENERAL REQUIREMENTS FOR PANELBOARDS

A. Fabricate and test panelboards according to IEEE 344 to withstand seismic forces defined in Division 26 Section "Vibration and Seismic Controls for Electrical Systems."

B. Enclosures: Surface-mounted cabinets.
   1. Rated for environmental conditions at installed location.
      a. Indoor Dry and Clean Locations: NEMA 250, Type 1.
      b. Outdoor Locations: NEMA 250, Type 3R.
   2. Hinged Front Cover: Entire front trim hinged to box and with standard door within hinged trim cover.
   3. Front: Secured to box with concealed trim clamps. For surface-mounted fronts, match box dimensions; for flush-mounted fronts, overlap box.
   4. Skirt for Surface-Mounted Panelboards: Same gage and finish as panelboard front with flanges for attachment to panelboard, wall, and ceiling or floor.
   5. Gutter Extension and Barrier: Same gage and finish as panelboard enclosure; integral with enclosure body. Arrange to isolate individual panel sections.
   6. Finishes:
      a. Panels and Trim: Steel, factory finished immediately after cleaning and pretreating with manufacturer's standard two-coat, baked-on finish consisting of prime coat and thermosetting topcoat.
      b. Back Boxes: Galvanized steel.
   7. Directory Card: Inside panelboard door, mounted inmetal frame with transparent protective cover.

C. Incoming Mains Location: Locate as required by construction and panel location.

D. Phase, Neutral, and Ground Buses:
   1. Material: Hard-drawn copper, 98 percent conductivity.
   2. Equipment Ground Bus: Adequate for feeder and branch-circuit equipment grounding conductors; bonded to box.

E. Conductor Connectors: Suitable for use with conductor material and sizes.
   1. Material: Hard-drawn copper, 98 percent conductivity.
   2. Main and Neutral Lugs: Mechanical type.
   3. Ground Lugs and Bus-Configured Terminators: Mechanical type.
   4. Feed-Through Lugs: Mechanical type, suitable for use with conductor material. Locate at opposite end of bus from incoming lugs or main device.
   5. Subfeed (Double) Lugs: Mechanical type suitable for use with conductor material. Locate at same end of bus as incoming lugs or main device.
   6. Gutter-Tap Lugs: Mechanical type suitable for use with conductor material. Locate at same end of bus as incoming lugs or main device.

F. Service Equipment Label: NRTL labeled for use as service equipment for panelboards or load centers with one or more main service disconnecting and overcurrent protective devices.

G. Future Devices: Mounting brackets, bus connections, filler plates, and necessary appurtenances required for future installation of devices to the full capacity of the panel.

H. Panelboard Short-Circuit Current Rating: Fully rated to interrupt symmetrical short-circuit current available at terminals.

2.2 LIGHTING AND APPLIANCE BRANCH-CIRCUIT PANELBOARDS

A. Manufacturers: Subject to compliance with requirements, provide products by one of the following :
   1. Eaton Electrical Inc.; Cutler-Hammer Business Unit.
   2. General Electric Company; GE Consumer & Industrial - Electrical Distribution.
   3. Siemens Energy & Automation, Inc.
   4. Square D; a brand of Schneider Electric.

B. Panelboards: NEMA PB 1, lighting and appliance branch-circuit type.

C. Mains: As indicated on drawings.

D. Branch Overcurrent Protective Devices: Bolt-on circuit breakers, replaceable without disturbing adjacent units.

E. Contactors in Main Bus: NEMA ICS 2, Class A, mechanically held, general-purpose controller, with same short-circuit interrupting rating as panelboard.
   1. Internal Control-Power Source: Control-power transformer, with fused primary and secondary terminals, connected to main bus ahead of contactor connection.
   2. External Control-Power Source: 120-V branch circuit.

3. Hinged Front Cover: Entire front trim hinged to box and with standard door within hinged trim cover.

F. Doors: Concealed hinges; secured with flush latch with tumbler lock; keyed alike.

G. Column-Type Panelboards: Narrow gutter extension, with cover, to overhead junction box equipped with ground and neutral terminal buses.

2.3 DISCONNECTING AND OVERCURRENT PROTECTIVE DEVICES

A. Manufacturers: Subject to compliance with requirements, provide products by one of the following :
1. Eaton Electrical Inc.; Cutler-Hammer Business Unit.
2. General Electric Company; GE Consumer & Industrial - Electrical Distribution.
3. Siemens Energy & Automation, Inc.
4. Square D; a brand of Schneider Electric.

B. Molded-Case Circuit Breaker (MCCB): Comply with UL 489, with series-connected rating to meet available fault currents.
1. Thermal-Magnetic Circuit Breakers: Inverse time-current element for low-level overloads, and instantaneous magnetic trip element for short circuits. Adjustable magnetic trip setting for circuit-breaker frame sizes 250 A and larger.
2. Adjustable Instantaneous-Trip Circuit Breakers: Magnetic trip element with front-mounted, field-adjustable trip setting.
3. Electronic trip circuit breakers with rms sensing; field-replaceable rating plug or field-replicable electronic trip; and the following field-adjustable settings:
   a. Instantaneous trip.
   b. Long- and short-time pickup levels.
   c. Long- and short-time time adjustments.
   d. Ground-fault pickup level, time delay, and I2t response, as indicated on one-line diagram.
4. Current-Limiting Circuit Breakers: Frame sizes 400 A and smaller; let-through ratings less than NEMA FU 1, RK-5.
5. GFCI Circuit Breakers: Single- and two-pole configurations with Class A ground-fault protection (6-mA trip).
6. Ground-Fault Equipment Protection (GFEP) Circuit Breakers: Class B ground-fault protection (30-mA trip).
7. Arc-Fault Circuit Interrupter (AFCI) Circuit Breakers: Comply with UL 1699; 120/240-V, single-pole configuration.
8. Molded-Case Circuit-Breaker (MCCB) Features and Accessories:
   a. Standard frame sizes, trip ratings, and number of poles.
   b. Lugs: Mechanical style, suitable for number, size, trip ratings, and conductor materials.
   c. Application Listing: Appropriate for application; Type SWD for switching fluorescent lighting loads; Type HID for switching fluorescent and high-intensity discharge (HID) lighting circuits.
   d. Ground-Fault Protection: Integrally mounted relay and trip unit with adjustable pickup and time-delay settings, push-to-test feature, and ground-fault indicator.

e. Shunt Trip: 120-V trip coil energized from separate circuit, set to trip at 55 percent of rated voltage.
f. Undervoltage Trip: Set to operate at 35 to 75 percent of rated voltage with field-adjustable 0.1- to 0.6-second time delay.
g. Auxiliary Contacts: Two SPDT switches with "a" and "b" contacts; "a" contacts mimic circuit-breaker contacts and "b" contacts operate in reverse of circuit-breaker contacts.
h. Alarm Switch: Single-pole, normally open contact that actuates only when circuit breaker trips.
i. Key Interlock Kit: Externally mounted to prohibit circuit-breaker operation; key shall be removable only when circuit breaker is in off position.
j. Zone-Selective Interlocking: Integral with electronic trip unit; for interlocking ground-fault protection function with other upstream or downstream devices.
k. Multipole units enclosed in a single housing or factory assembled to operate as a single unit.
l. Handle Padlocking Device: Fixed attachment, for locking circuit-breaker handle in on or off position.
m. Handle Clamp: Loose attachment, for holding circuit-breaker handle in on position.

C. Fused Switch: NEMA KS 1, Type HD; clips to accommodate specified fuses; lockable handle.
1. Fuses, and Spare-Fuse Cabinet: Comply with requirements specified in Division 26 Section "Fuses."
2. Fused Switch Features and Accessories: Standard ampere ratings and number of poles.
3. Auxiliary Contacts: Two normally open and normally closed contact(s) that operate with switch handle operation.

2.4 ACCESSORY COMPONENTS AND FEATURES

A. Accessory Set: Include tools and miscellaneous items required for overcurrent protective device test, inspection, maintenance, and operation.

B. Portable Test Set: For testing functions of solid-state trip devices without removing from panelboard. Include relay and meter test plugs suitable for testing panelboard meters and switchboard class relays.

PART 3 - EXECUTION

3.1 EXAMINATION

A. Receive, inspect, handle, and store panelboards according to NECA 407.

B. Examine panelboards before installation. Reject panelboards that are damaged or rusted or have been subjected to water saturation.

C. Examine elements and surfaces to receive panelboards for compliance with installation tolerances and other conditions affecting performance of the Work.

D. Proceed with installation only after unsatisfactory conditions have been corrected.

3.2 INSTALLATION

A. Install panelboards and accessories according to NECA 407.

B. Floor Mounting: Install large floor mounted panelboards on concrete bases, 4-inch nominal thickness. Comply with requirements for concrete base specified in Division 26 Section "Common Work Results for Electrical".
   1. Install dowel rods to connect concrete base to concrete floor. Unless otherwise indicated, install dowel rods on 18-inch centers around full perimeter of base.
   2. For panelboards, install epoxy-coated anchor bolts that extend through concrete base and anchor into structural concrete floor.
   3. Place and secure anchorage devices. Use setting drawings, templates, diagrams, instructions, and directions furnished with items to be embedded.
   4. Install anchor bolts to elevations required for proper attachment to panelboards.
   5. Attach panelboard to the vertical finished or structural surface behind the panelboard.

C. Temporary Lifting Provisions: Remove temporary lifting eyes, channels, and brackets and temporary blocking of moving parts from panelboards.

D. Mount top of trim so that the handle of the highest circuit breaker does not exceed 78 inches above finished floor unless otherwise indicated.

E. Mount panelboard cabinet plumb and rigid without distortion of box. Mount recessed panelboards with fronts uniformly flush with wall finish and mating with back box.

F. Install overcurrent protective devices and controllers not already factory installed.

G. Install filler plates in unused spaces.

H. Stub (4) 1-inch empty conduits from panelboard into accessible ceiling space or space designated to be ceiling space in the future.

I. Arrange conductors in gutters into groups and bundle and wrap with wire ties after completing load balancing.

J. Comply with NECA 1.

3.3 IDENTIFICATION

A. Identify field-installed conductors, interconnecting wiring, and components; provide warning signs complying with Division 26 Section "Identification for Electrical Systems."

B. Create a directory to indicate installed circuit loads after balancing panelboard loads; incorporate Owner's final room designations. Obtain approval before installing. Use a computer or typewriter to create directory; handwritten directories are not acceptable.

C. Panelboard Nameplates: Label each panelboard with a nameplate complying with requirements for identification specified in Division 26 Section "Identification for Electrical Systems."

D. Device Nameplates: Label each branch circuit device in distribution panelboards with a nameplate complying with requirements for identification specified in Division 26 Section "Identification for Electrical Systems."

3.4 FIELD QUALITY CONTROL

A. Acceptance Testing Preparation:

1. Test insulation resistance for each panelboard bus, component, connecting supply, feeder, and control circuit.
2. Test continuity of each circuit.

B. Tests and Inspections:
   1. Perform each visual and mechanical inspection and electrical test stated in NETA Acceptance Testing Specification. Certify compliance with test parameters.
   2. Correct malfunctioning units on-site, where possible, and retest to demonstrate compliance; otherwise, replace with new units and retest.
   3. Perform the following infrared scan tests and inspections and prepare reports:
      a. Initial Infrared Scanning: After Substantial Completion, but not more than 60 days after Final Acceptance, perform an infrared scan of each panelboard. Remove front panels so joints and connections are accessible to portable scanner.
      b. Follow-up Infrared Scanning: Perform an additional follow-up infrared scan of each panelboard 11 months after date of Substantial Completion.
      c. Instruments and Equipment:
         1) Use an infrared scanning device designed to measure temperature or to detect significant deviations from normal values. Provide calibration record for device.

C. Panelboards will be considered defective if they do not pass tests and inspections.

D. Prepare test and inspection reports, including a certified report that identifies panelboards included and that describes scanning results. Include notation of deficiencies detected, remedial action taken and observations after remedial action.

3.5 ADJUSTING

A. Adjust moving parts and operable component to function smoothly, and lubricate as recommended by manufacturer.

B. Load Balancing: After Substantial Completion, but not more than 60 days after Final Acceptance, measure load balancing and make circuit changes.
   1. Measure as directed during period of normal system loading.
   2. Perform load-balancing circuit changes outside normal occupancy/working schedule of the facility and at time directed. Avoid disrupting critical 24-hour services such as fax machines and on-line data processing, computing, transmitting, and receiving equipment.
   3. After circuit changes, recheck loads during normal load period. Record all load readings before and after changes and submit test records.
   4. Tolerance: Difference exceeding 20 percent between phase loads, within a panelboard, is not acceptable. Rebalance and recheck as necessary to meet this minimum requirement.

3.6 PROTECTION

A. Temporary Heating: Apply temporary heat to maintain temperature according to manufacturer's written instructions.

END OF SECTION

PART 1 - GENERAL

1.1 SUMMARY

A. Section Includes:
1. Exterior solid-state luminaires that are designed for and exclusively use LED lamp technology.
2. Luminaire supports.
3. Luminaire-mounted photoelectric relays.

1.2 DEFINITIONS

A. CCT: Correlated color temperature.

B. CRI: Color rendering index.

C. Fixture: See "Luminaire."

D. IP: International Protection or Ingress Protection Rating.

E. Lumen: Measured output of lamp and luminaire, or both.

F. Luminaire: Complete lighting unit including LED light engine,driver, reflector, and housing.

1.3 ACTION SUBMITTALS

A. See Section 01 3000 – Administrative Requirements, for submittal procedures

B. Product Data: For each type of luminaire.
1. Arrange in order of luminaire designation.
2. Include data on features, accessories, and finishes.
3. Include physical description and dimensions of luminaire.
4. Luminaire classification per IES TM-15 (BUG Rating).
5. Lamps, include life, output (lumens, CCT, and CRI), and energy-efficiency data.
6. Photometric data and adjustment factors based on laboratory tests, complying with IES LM-79and IES LM-80.
   a. Manufacturer's Certified Data: Photometric data certified by manufacturer’s laboratory with a current accreditation under the NVLAP for Energy Efficient Lighting Products.
   b. Testing Agency Certified Data: For indicated luminaires, photometric data certified by a qualified independent testing agency. Photometric data for remaining luminaires shall be certified by manufacturer.

7. Wiring diagrams for power, control, and signal wiring.
8. Photoelectric relays.
9. Means of attaching luminaires to supports and indication that the attachment is suitable for components involved.

1.4 INFORMATIONAL SUBMITTALS

A. See Section 01 3000 – Administrative Requirements, for submittal procedures

B. Qualification Data: For testing laboratory providing photometric data for luminaires.

C. Product Certificates: For each type of the following:
1. Luminaire.
2. Photoelectric relay.

D. Source quality-control reports.

E. Sample warranty.

1.5 CLOSEOUT SUBMITTALS

A. See Section 01 7800 – Closeout Submittals, for submittal requirements and procedures

1.6 QUALITY ASSURANCE

A. Luminaire Photometric Data Testing Laboratory Qualifications: Luminaire manufacturers' laboratory that is accredited under the NVLAP for Energy Efficient Lighting Products.

B. Luminaire Photometric Data Testing Laboratory Qualifications: Provided by an independent agency, with the experience and capability to conduct the testing indicated, that is an NRTL as defined by OSHA in 29 CFR 1910.7, accredited under the NVLAP for Energy Efficient Lighting Products and complying with applicable IES testing standards.

C. Provide luminaires from a single manufacturer for each luminaire type.

D. Each luminaire type shall be binned within a three-step MacAdam Ellipse to ensure color consistency among luminaires.

E. Installer Qualifications: An authorized representative who is trained and approved by manufacturer.

1.7 DELIVERY, STORAGE, AND HANDLING

A. Protect finishes of exposed surfaces by applying a strippable, temporary protective covering prior to shipping.

1.8 FIELD CONDITIONS

A. Verify existing and proposed utility structures prior to the start of work associated with luminaire installation.

B. Mark locations of exterior luminaires for approval by Architect prior to the start of luminaire installation.

1.9 WARRANTY

A. See Section 01 7400 – Warranties and Bonds for information about Guarantees.

PART 2 - PRODUCTS

2.1 LUMINAIRE REQUIREMENTS

A. Electrical Components, Devices, and Accessories: Listed and labeled as defined in NFPA 70, by a qualified testing agency, and marked for intended location and application.

B. NRTL Compliance: Luminaires shall be listed and labeled for indicated class and division of hazard by an NRTL.

C. UL Compliance: Comply with UL 1598 and listed for wet location.

D. CRI of minimum80. CCT of 3000 K.

E. L70 lamp life minimum of 50,000 hours.

F. Lamps dimmable from 100 percent to 10percent of maximum light output.

G. Internal driver.

H. Nominal Operating Voltage: 120 VAC.

I. In-line Fusing: Separate in-line fuse for each luminaire.

J. Lamp Rating: Lamp marked for outdoor use.

K. Source Limitations: For luminaires, obtain each color, grade, finish, type, and variety of luminaire from single source with resources to provide products of consistent quality in appearance and physical properties.

2.2 LUMINAIRE TYPES

A. Refer to the Luminaire Schedule on the drawings for fixture types, wattage, manufacturers, catalog numbers, etc.

2.3 MATERIALS

A. Refer to the Luminaire Schedule on the drawings for fixture types, wattage, manufacturers, catalog numbers, etc.

2.4 FINISHES

A. Variations in Finishes: Noticeable variations in same piece are unacceptable. Variations in appearance of adjoining components are acceptable if they are within the range of approved Samples and are assembled or installed to minimize contrast.

B. Luminaire Finish: Manufacturer's standard paint applied to factory-assembled and -tested luminaire before shipping. Where indicated, match finish process and color of pole or support materials.

C. Factory-Applied Finish for Aluminum Luminaires: Comply with NAAMM's "Metal Finishes Manual for Architectural and Metal Products" for recommendations for applying and designating finishes.

2.5 LUMINAIRE SUPPORT COMPONENTS

A. Comply with requirements in Section 260529 "Hangers and Supports for Electrical Systems" for channel and angle iron supports and nonmetallic channel and angle supports.

PART 3 - EXECUTION

3.1 EXAMINATION

A. Examine substrates, areas, and conditions, with Installer present, for compliance with requirements for installation tolerances and other conditions affecting performance of the Work.

B. Examine roughing-in for luminaire electrical conduit to verify actual locations of conduit connections before luminaire installation.

C. Examine walls, roofs, canopy ceilingsandoverhang ceilings for suitable conditions where luminaires will be installed.

D. Proceed with installation only after unsatisfactory conditions have been corrected.

3.2 GENERAL INSTALLATION REQUIREMENTS

A. Comply with NECA 1.

B. Install lamps in each luminaire.

C. Fasten luminaire to structural support.

D. Supports:
   1. Sized and rated for luminaire weight.
   2. Able to maintain luminaire position after cleaning and relamping.
   3. Support luminaires without causing deflection of finished surface.
   4. Luminaire-mounting devices shall be capable of supporting a horizontal force of 100 percent of luminaire weight and a vertical force of 400 percent of luminaire weight.

E. Wall-Mounted Luminaire Support:
   1. Follow manufacturer's installation instructions.

F. Wiring Method: Install cables in raceways. Conceal raceways and cables. Where exposed conduits shall be routed parallel or perpendicular to structural members.

G. Install luminaires level, plumb, and square with finished grade unless otherwise indicated.Install luminaires at height and aiming angle as indicated on Drawings.

H. Coordinate layout and installation of luminaires with other construction.

I. Adjust luminaires that require field adjustment or aiming. Engineer or Architect shall be present for final aiming and adjustment. Include adjustment of photoelectric device to prevent false operation of relay by artificial light sources, favoring a north orientation.

J. Comply with requirements in Section 260519 "Low-Voltage Electrical Power Conductors and Cables" and 260533 "Raceways and Boxes for Electrical Systems" for wiring connections and wiring methods.

3.3 CORROSION PREVENTION

A. Aluminum: Do not use in contact with earth or concrete. When in direct contact with a dissimilar metal, protect aluminum by insulating fittings or treatment.

B. Steel Conduits: Comply with Section 260533 "Raceways and Boxes for Electrical Systems." In concrete foundations, wrap conduit with 0.010-inch- (0.254-mm-) thick, pipe-wrapping plastic tape applied with a 50 percent overlap.

3.4 IDENTIFICATION

A. Identify system components, wiring, cabling, and terminals. Comply with requirements for identification specified in Section 260553 "Identification for Electrical Systems."

3.5 FIELD QUALITY CONTROL

A. Inspect each installed luminaire for damage. Replace damaged luminaires and components at no cost to the project.

B. Perform the following tests and inspections:
   1. Operational Test: After installing luminaires, switches, and accessories, and after electrical circuitry has been energized, test units to confirm proper operation.
   2. Verify operation of photoelectric controls.
   3. Operational Test: After installing luminaires, switches, and accessories, and after electrical circuitry has been energized, test units to confirm proper operation.

C. Luminaire will be considered defective if it does not pass tests and inspections.

D. Prepare a written report of tests, inspections, observations, and verifications indicating and interpreting results. If adjustments are made to lighting system, retest to demonstrate compliance with standards.

3.6 DEMONSTRATION

A. Engage a factory-authorized service representative to train Owner's maintenance personnel to adjust, operate, and maintain luminaires and photocell relays.

3.7 ADJUSTING

A. Occupancy Adjustments: When requested within 12 months of date of Substantial Completion, provide on-site assistance in adjusting the direction of aim of luminaires to suit occupied conditions. Make up to two visits to Project during other-than-normal hours for this purpose. Some of this work may be required during hours of darkness.
   1. During adjustment visits, inspect all luminaires. Replace lamps or luminaires that are defective.
   2. Parts and supplies shall be manufacturer's authorized replacement parts and supplies.
   3. Adjust the aim of luminaires in the presence of the Architect and/or Lighting Designer.

END OF SECTION

DIVISION 31 – EARTHWORK

SECTION 31 11 00 CLEARING AND GRUBBING

PART 1 - GENERAL

1.1 RELATED DOCUMENTS

A. Contract Drawings and general provisions of the Contract, including General and Supplementary Conditions and Division 01 Specification Sections, apply to this Section.

B. Requirements described in the Materials Management Plan (MMP), prepared by Pinyon Environmental, dated May 12, 2018 apply to this section. (See Appendix)

C. Requirements described in the Project Specific Regulated Asbestos Contaminated Soil Materials Plan (PSMP), prepared by Pinyon Environmental Inc, dated March 1, 2018 apply to this section. (See Appendix)

1.2 SUMMARY

A. This Section includes requirements for stripping sod, and removing and disposing of vegetation and debris.

B. Related Sections:
1. Division 01 Section “Temporary Facilities and Controls”.
2. Division 01 Section “Erosion and Sedimentation Control”.
3. Division 01 Section “Tree Retention and Protection”.
4. Division 31 Section “Earth Moving”
5. Division 32 Section “Tree Transplanting”.

1.3 DEFINITIONS

A. The term “sod stripping” shall be used when the vegetative material to be removed is mowable and generally less than twelve-inches (12”) tall.

B. The term “tree removal” refers to individual woody plants with a caliper over four-inches (4”). Any removals shall be performed by a tree Contractor licensed through Denver Forestry.

C. The term “”clearing” refers to removing and disposing trees, brush, stumps, logs, grass, weeds, roots, decayed vegetable matter, poles, stubs, rubbish, refuse dumps, sawdust piles, and loose boulders of one cubic yard (1 yd^3) or less existing outside of the construction limits, debris resting on or protruding through the ground surface, or appearing on the construction limits before final acceptance of the work. Clearing also includes removing and disposing of obstructions, such as fences, bridges, buildings, and other incidental structures within the construction limits and shown on the Site Demolition Plans.

D. The term “grubbing” refers to removal from the area within the construction limits and proper disposal of all objectionable matter defined above under clearing, which is embedded in the underlying soil. Grubbing also includes removing and properly disposing of sidewalks, driveways, catch basins, drop inlets, manholes, curbing, retaining walls, utilities, foundations, paved floors, underground tanks, and portions of plants to be removed that are below grade, and other structures within the construction limits.

E. Subsoil: All soil beneath the topsoil layer of the soil profile and typified by the lack of organic matter and soil organisms.

F. Topsoil: Top layer of the soil profile consisting of existing native surface topsoil or existing in-place surface soil and is the zone where plant roots grow, and ; reasonably free of subsoil, clay lumps, gravel, and other objects more than two-inches (2”) in diameter; and free of subsoil and weeds, roots, toxic materials, or other non-soil materials.

G. Plant-Protection Area: Area surrounding shrub beds or massings, or other vegetation or sensitive areas to be protected during construction, and indicated on Contract Drawings.

H. Tree-Protection Area: Area surrounding individual trees or groups of trees to be protected during construction, see Division 01 Section “Tree Retention and Protection”.

I. Vegetation: Trees, shrubs, groundcovers, grass, and other plants.

1.4 MATERIAL OWNERSHIP

A. All materials, except those materials indicated to remain or to be stockpiled, shall remain the property of the City. All other materials shall be removed at the Contractor's expense.

1.5 SUBMITTALS

A. Existing Conditions: Documentation of existing conditions, adjoining construction, and site improvements that establishes preconstruction conditions that might be misconstrued as damage caused by site clearing.
   1. Use sufficiently detailed digital photographs or videos.
   2. Include plans and notations to indicate specific damaged conditions of existing construction, site elements, and landscape.

B. Record Drawings: Identifying and accurately showing locations of capped utilities and other subsurface structural, electrical, and mechanical conditions. Submit to Project Manager prior to start of construction.

1.6 PROJECT CONDITIONS

A. Traffic: Minimize interference with adjoining roads, streets, walks, and other adjacent occupied or used facilities during site-clearing operations.
   1. Do not close or obstruct streets, walks, or other adjacent occupied or used facilities without permission from Project Manager.
   2. Provide alternate routes around closed or obstructed traffic ways if required by Project Manager.

B. Improvements on Adjoining Property: Not allowed without prior approval from Project Manager. Work only within Work Limit Line as defined on drawings.

C. Salvable Items: Carefully remove items indicated to be salvaged and store on City property where indicated.

D. Protection and Repair of Underground lines:

1. Existing Public Utilities: Locate existing underground utilities within the limits of work per General Contract Conditions, Article 804 Protection of Municipal, Public Service or Public Utility Systems. Request utility locates seventy two (72) hours in advance of any excavations by calling the Utility Notification Center of Colorado at 811. The contractor is responsible for providing written and graphical documentation from the utility owner. Take whatever precautions are necessary including potholing to verify location and depth to protect these underground lines from damage. Should unmarked or incorrectly marked utilities or other piping be encountered during excavation, notify the Project Manager immediately for direction. If damage does occur, all damage shall be repaired by the utility owner and all costs of such repair shall be paid by the contractor. Only written all clears will be acceptable, verbal all clears will not be accepted.
2. Existing Private Utilities: Locate existing underground utilities within the limits of work per General Contract Conditions, Article 804 Protection of Municipal, Public Service or Public Utility Systems. The contractor is required to contact all private utility companies including Denver City departments to locate all private utilities. The contractor is responsible for providing written and graphical documentation from the private utility owner. The request for locates shall be a minimum of seventy two (72) prior to proceeding with any excavation. If, after such requests, private utilities are encountered and damaged by the contractor these shall be repaired at no cost to the city. If the contractor damages staked or located private utilities they shall be repaired by the utility owner and all costs of such repair shall be paid by the contractor. Only written all clears will be acceptable, verbal all clears will not be accepted.

E. Do not commence site clearing operations until temporary erosion- and sedimentation-control and tree and or plant protection measures are in place.

PART 2 - PRODUCTS (Not Used)

PART 3 - EXECUTION

3.1 PROTECTION

A. Protect existing site conditions from damage during construction.
1. Restore existing conditions damaged by Contractor during the work of this Contract to their original condition, as acceptable by Project Manager.

3.2 TRANSPLANTING

A. See Division 32 Section “Tree Transplanting”.

3.3 CLEARING

A. Remove brush and vegetation from areas designated to be cleared. As directed by Project Manager, trim low hanging, unsound, or unsightly branches on existing trees and shrubs designated to remain. All cuts shall be in accordance with Denver Forestry standards.

3.4 GRUBBING

A. Remove all stumps, roots, and debris a minimum of twelve-inches (12") below finish grade in all areas as required. Use hand methods for grubbing inside drip line of trees to remain. Backfill and compact stump and root holes to a maximum of eighty five percent (85%) standard proctor in landscape areas and ninety five percent (95%) standard proctor under hardscape or as directed by the City Forester and Project Manager.

3.5 TOPSOIL STRIPPING

A. See Division 31 Section "Earth Moving".

3.6 SOD STRIPPING

A. Strip sod in all areas to be re-graded to a depth of one-inch (1"), so that a relatively clean dirt surface remains.

3.7 TREE REMOVAL

A. In all proposed landscaped areas, stumps and surface roots shall be ground to a minimum of twelve-inches (12") below finish grade. In proposed hardscape areas, all roots shall be removed entirely.

3.8 DISEASED TREE REMOVAL AND DISPOSAL

A. The removal of diseased and infested trees includes the requirement of offsite burial of all parts of the trees immediately following removal. This includes logs, stumps, roots, branches and composted and un-composted chips. Under no circumstances should diseased or infected wood be left or taken for firewood, mulch or taken to a wood processing mill.

3.9 DISPOSAL

A. Haul and dispose of all removed materials, trash, debris and waste materials legally outside of the City's property.
   1. All recyclable materials shall be hauled to nearest recycling center and any non-recyclable materials shall be hauled to Denver Arapahoe Disposal Site (DADS). DADS Disposal tickets and manifests shall be provided to the Contractor by Project Manager.
   2. Reference the Project Specific Regulated Asbestos Contaminated Soil Materials Plan (PSMP), prepared by Pinyon Environmental Inc, dated March 1, 2018 for additional instructions for handling and disposal of Regulated Asbestos Contaminated Soils (RACS). (See Appendix)
   3. Reference the Materials Management Plan (MMP), prepared by Pinyon Environmental, dated May 12, 2018 for additional instructions for handling and disposal of Non-RACS.

PART 4 - MEASUREMENT AND PAYMENT

4.1 MEASUREMENT

A. Measurement will be made by the contract unit specified for Clearing and Grubbing.

4.2 PAYMENT

A. Payment will be made at the contract unit price, and shall include required materials, transportation, equipment, labor. The lump sum price shall include all clearing and grubbing of miscellaneous debris or items defined in Part 1 - General, including all other work necessary to ensure a clear dirt surface remains on the site. Price shall include the removal and offsite disposal of all materials. All recyclable materials shall be hauled to the nearest recycling center and any non-recyclable materials shall be hauled to DADS. DADS disposal tickets and manifests shall be provided to the Contractor by the Project Manager. Reference the PSMP and MMP for disposal of RACS and Non-RACS. No payment will be made for the removal of any brush and vegetation damaged by the Contractor beyond the authorized limits of removal.

END OF SECTION 31 11 00

PART 1 - GENERAL

1.1 RELATED DOCUMENTS

A. Contract Drawings and general provisions of the Contract, including General and Supplementary Conditions and Division 01 Specification Sections, apply to this Section.

B. Related Report Documentation
1. Geotechnical Report, prepared by Rocksol Consulting Group Inc, dated May 5, 2016
2. Materials Management Plan (MMP), prepared by Pinyon Environmental, dated May 12, 2018
3. Project Specific Regulated Asbestos Contaminated Soil Materials Plan (PSMP), prepared by Pinyon Environmental Inc, dated March 1, 2018

1.2 SUMMARY

A. This Section includes the requirements for excavation, re-grading, stripping and stockpiling of topsoil, filling, backfilling, compaction, hauling, and legal off-site disposal of spoil materials to meet the required lines and grade as specified to complete the work.

B. Related Sections:
1. Division 01 Section “Erosion and Sedimentation Control”.
2. Division 01 Section “Tree Retention and Protection”.
3. Division 01 Section “Clearing and Grubbing”.
4. Division 02 Section “Demolition”.
5. Division 31 Section “Excavation and Backfilling of Trenches”.
6. Division 32 Section “Topsoil”.

1.3 DEFINITIONS

A. Excavation: The removal of material encountered to subgrade or over-excavation and subsequent disposal or placement of materials removed.

B. Unclassified Excavation: The term “unclassified excavation”, as used herein, includes the excavation of all materials required for the work obtained within construction limits of project, including bedrock, surface boulders, wasted sections of concrete, asphalt or other debris including historic landfills that may be encountered. All excavation will be considered unclassified regardless of the nature of material encountered.

C. Classified Excavation: The term “classified excavation”, as used herein, defines the soil conditions that are expected to be encountered and makes provisions for measurement and payment of any rock encountered at an agreed upon unit price.

D. Unauthorized Excavation: Inadvertent or purposely removing materials beyond indicated subgrade elevations or dimensions without specific direction of the Project Manager. Unauthorized excavation, as well as remedial work resulting from unauthorized excavation shall be at Contractor’s expense.

E. Unsuitable Materials: For the purposes of classified excavation, unsuitable material shall be defined as material below subgrade elevation that exhibits excessive pumping or that does not meet density requirements due to unsatisfactory material as determined by geotechnical engineer and/or Project Manager.

F. Subgrade: The undisturbed earth or the compacted soil layer immediately below proposed pavement topping materials.

G. Structure: Walls, foundations, slabs, pavement or other man-made stationary features occurring above or below ground surface.

H. Structural Fill: The term "structural fill", as used herein, includes soil materials used for general site filling under pavements or structures.

1.4 SUBMITTALS

A. Samples for Verification: For the following products, in sizes indicated below:
   1. Warning Tape: Twelve-inches (12") long; of each color.

B. Qualification Data: For qualified testing agency.

C. Material Test Reports: For each on-site and borrow soil material proposed for fill and backfill as follows:
   1. Location of soil source.
   2. Classification according to ASTM D 2487.
   3. Laboratory compaction curve according to ASTM D 698.

D. Provide one (1) cubic foot sample of imported backfill material for approval by Project Manager.

E. For imported backfill materials, general or structural, the Contractor shall provide, at a minimum, a soils report indicating gradation tests, liquid limit, plasticity index and standard proctor density test and free of environmental contaminants. Depending on the use of the imported backfill materials the Project Manager may request that a soils analysis be performed to determine percent organic content of the soils, salt levels, and environmental contaminants of concern. Division 32 Section "Topsoil" for additional information.

F. Pre-excavation Photographs or Video: Show existing conditions of adjoining construction and site improvements, including finish surfaces that might be misconstrued as damage caused by earth moving operations. Submit before earth moving begins.

1.5 PROJECT CONDITIONS

A. Protection and Repair of Underground lines:
   1. Existing Public Utilities: Locate existing underground utilities within the limits of work per General Contract Conditions, Article 804 Protection of Municipal, Public Service or Public Utility Systems. Request utility locates seventy two (72) hours in advance of any excavations by calling the Utility Notification Center of Colorado at 811. The Contractor is responsible for providing written and graphical documentation from the utility owner. Take whatever precautions are necessary including potholing to verify location and depth to protect these underground lines from damage. Should unmarked or incorrectly marked

utilities or other piping be encountered during excavation, notify the Project Manager immediately for direction. If damage does occur, all damage shall be repaired by the utility owner and all costs of such repair shall be paid by the Contractor. Only written all clears will be acceptable, verbal all clears will not be accepted.

2. Existing Private Utilities: Locate existing underground utilities within the limits of work per General Contract Conditions, Article 804 Protection of Municipal, Public Service or Public Utility Systems. The Contractor is required to contact all private utility companies including Denver City departments to locate all private utilities. The Contractor is responsible for providing written and graphical documentation from the private utility owner. The request for locates shall be a minimum of seventy-two (72) hours prior to proceeding with any excavation. If, after such requests, private utilities are encountered and damaged by the Contractor these shall be repaired at no cost to the city. If the Contractor damages staked or located private utilities, they shall be repaired by the utility owner and all costs of such repair shall be paid by the Contractor. Only written all clears will be acceptable, verbal all clears will not be accepted.

B. Use of Explosives: Use of explosives is not permitted.

C. Protection of Persons and Property: The Contractor is responsible for installing barricades and posting warning lights with all open excavations occurring as part of the work.

1. Protect structures, utilities, walkways, pavements, and other facilities from damage caused by settlement, lateral movement, undermining, washout, and other hazards created by earthwork operations.

D. Environmental Requirements: Blasting is not permitted. Employ jack hammering and other loud noises and methods sparingly; comply with all applicable noise abatement ordinances or regulations. Onsite burning is not allowed.

E. Existing Benchmarks: Carefully preserve and maintain existing benchmarks, vertical/horizontal control, monuments, property line pipes and pins, and other reference points. If disturbed or destroyed, restore or replace at no additional cost to the City.

F. Do not commence earth moving operations until temporary erosion- and sedimentation-control measures, specified in Division 01 Sections "Temporary Facilities and Controls” and “Tree Retention and Protection”, and Division 31 Section "Clearing and Grubbing," are in place.

PART 2 - PRODUCTS

2.1 SOIL MATERIALS

A. General: All fill material, regardless of intended use category, must be clean and free from organic matter, roots, brush or other vegetation, trash, debris or other detrimental substances, and rocks or unbroken lumps larger than three-inches (3”). Project Manager to approve material prior to placement.

1. The Contractor is responsible for furnishing load tickets and providing a daily log of cubic yards of soil materials imported or exported.

B. Structural Fill: Shall be CDOT Class 1 or Class 2 material composed of non-organic mineral aggregates and soil from excavations of existing soils obtained from on-site or imported fill, including granular or aggregate base course from removed pavements. Fill containing organic

matter or any other deleterious substances, including overly wet soils, bedrock, or high swell content soils will not be accepted. If sufficient materials meeting the above requirements are not available from on-site sources, provide additional material obtained from off-site sources and approved by the testing and inspections agency, at no additional cost to the City. The soil must be compactable and pass, at minimum, a proof roll prior to being accepted for supporting paving materials.

C. On-Site Topsoil: All topsoil shall be removed and disposed of in accordance to the Materials Management Plan and the Project Specific Regulated Asbestos Contaminated Soil Materials Plan

2.2 ACCESSORIES

A. Warning Tape: Acid- and alkali-resistant, polyethylene film warning tape manufactured for marking and identifying underground utilities, six-inches (6") wide and four (4) mils thick, continuously inscribed with a description of the utility; colored as follows:
1. Red: Electric.
2. Yellow: Gas, oil, steam, and dangerous materials.
3. Orange: Telephone and other communications.
4. Blue: Water systems.
5. Green: Sewer systems.

B. Detectable Warning Tape: Acid- and alkali-resistant, polyethylene film warning tape manufactured for marking and identifying underground utilities, a minimum of six-inches (6") wide and four (4) mils thick, continuously inscribed with a description of the utility, with metallic core encased in a protective jacket for corrosion protection, detectable by metal detector when tape is buried up to thirty-inches (30") deep; colored as follows:
1. Red: Electric.
2. Yellow: Gas, oil, steam, and dangerous materials.
3. Orange: Telephone and other communications.
4. Blue: Water systems.
5. Green: Sewer systems.

PART 3 - EXECUTION

3.1 EXAMINATION

A. Examine areas where the Work of this Section will be performed for compliance with requirements and conditions affecting installation and performance.

1. Verify that no foreign or deleterious material or liquid such as paint, paint washout, concrete slurry, concrete layers or chunks, cement, plaster, oils, gasoline, diesel fuel, paint thinner, turpentine, tar, roofing compound, or acid has been deposited in soil within the work area.
2. Verify that final grades are completed in accordance with the drawings.

B. Proceed with installation only after unsatisfactory conditions have been corrected and approved by Project Manager.

3.2 GENERAL PROCEDURES

A. Comply with Division 01 Section “Erosion and Sedimentation Control” and all local, state and national erosion control requirements.

B. Erosion Control shall be maintained during all phases of site excavation and site development and maintained throughout the construction period in order to protect adjacent properties, streets, and storm sewers from erosion and sediment runoff during the construction process. Do not commence excavation and grading work until erosion control measures are in place and have been inspected and approved by the Wastewater Management Inspector. Contractor shall be responsible for maintaining erosion control measures throughout construction. Frequent monitoring, cleaning and other work required for proper operation shall be Contractor’s responsibility. Contractor shall modify/replace all erosion control measures to fit field conditions following direction for corrective actions from Project Manager and or Wastewater Management Inspector.

3.3 QUALITY CONTROL

A. Coordinated and paid for by Contractor.

B. Geotechnical Testing Agency Qualifications: Qualified according to ASTM E 329 and ASTM D 3740 for testing indicated.

C. Comply with requirements within the project Geotechnical Report, the Material Management Plan, and the Project Specific Regulated Asbestos Contaminated Soil Materials Plan.

D. Codes and Standards: Comply with all applicable local, state and Federal rules, regulations and ordinances concerning sloping of excavation, trenching and safety of workers, including the latest version of OSHA requirement.

E. Testing Agency: All testing required to determine compliance for the work of this section will be completed as specified in Division 01 Section “Contractor Quality Control”. Testing Agency to test the following, and as stated throughout this Section:
   1. Determine prior to placement of fill that site has been prepared in compliance with requirements.
   2. Determine that fill material and maximum lift thickness comply with requirements.
   3. Determine, at the required frequency, that in-place density of compacted fill complies with requirements.

F. Allow testing agency to inspect and test subgrades and each fill or backfill layer. Proceed with subsequent earth moving only after test results for previously completed work comply with requirements.

G. Footing Subgrade: At footing subgrades, at least one test of each soil stratum will be performed to verify design bearing capacities. Subsequent verification and approval of other footing subgrades may be based on a visual comparison of subgrade with tested subgrade when approved by Project Manager.

H. Testing agency will test compaction of soils in place according to ASTM D 1556, ASTM D 2167, ASTM D 2922, and ASTM D 2937, as applicable. Tests will be performed at the following locations and frequencies:

1. Paved Areas: At subgrade and at each compacted fill and backfill layer, at least one test for every two thousand (2,000) sq. ft. or less of paved area or building slab, but in no case fewer than three (3) tests.
2. Foundation Wall Backfill: At each compacted backfill layer, at least one test for every 50 feet (50') or less of wall length, but no fewer than two tests.
3. Trench Backfill: At each compacted initial and final backfill layer, at least one test for every one hundred fifty feet (150') or less of trench length, but no fewer than two tests.
4. Landscaped areas: At least one test every twenty thousand (20,000) sq. ft or less of disturbed landscaped area, but in no case fewer than two tests.

I. When testing agency reports that subgrades, fills, or backfills have not achieved degree of compaction specified, scarify and moisten or aerate, or remove and replace soil materials to depth required; re-compact and retest until specified compaction is obtained.

J. Submit testing report documentation to Project Manager per Division 01 Section "Quality Assurance".

3.4 DEWATERING

A. Wherever possible, prevent surface water and subsurface or groundwater from flowing into excavations and from flooding the project site and surrounding area.

B. Contractor shall be required to dewater excavated areas by pumping, or otherwise control the water so that the project can be constructed in accordance with the plans. Any controlling of the water must be performed in such a manner that recently constructed portions of the project are not damaged. Repairs shall be at the Contractor's expense.

C. Damage to adjacent property that results from the Contractor's alteration of any surface drainage, ground water flows or pumped water shall be repaired by the Contractor at no additional cost to the City.

3.5 GROUND SURFACE PREPARATION

A. Complete clearing and grubbing operations in accordance with Division 31 Section "Clearing and Grubbing". Where new material is to be placed on compacted subgrade, scarify ground surface until surface is free from ruts, hummocks or other uneven features, which would prevent uniform compaction and bond between old and new material.

B. Prior to placing any new sections of asphalt or concrete pavement, the entire subgrade shall be scarified to a depth of six-inches (6"). In areas where existing pavement is to be removed and replaced the existing compacted subgrade may be reused if the subgrade meets specified compaction. In areas of existing subgrade that do not meet the specified compaction, materials shall be removed, replaced and compacted to meet the specified proctor density. Adjust moisture content and compact as hereinafter specified.

3.6 STRIPPING AND STOCKPILING TOPSOIL

A. Strip all topsoil from the excavation zone for new facilities (four-inches (4") in depth for all disturbed areas). All topsoil shall be removed and disposed of in accordance to the Materials Management Plan and the Project Specific Regulated Asbestos Contaminated Soil Materials Plan

B. Placing topsoil, refer to Division 32 Section “Topsoil”.

3.7 EXCAVATION

A. Stability of excavations: Comply with local codes, ordinances, and requirements of agencies having jurisdiction to include the latest revision to OSHA standards.

B. Excavation for Structures: Conform to elevations and dimensions shown within a tolerance of +/- one tenth foot (0.1’), and extending a sufficient distance to permit installation of services and other construction, and for inspection.

C. Excavation for Pavements: Cut surface under pavements to comply with cross-sections, elevations and grades as indicated within a tolerance of +/- one tenth foot (0.1’).

D. Unclassified Excavation: Excavate to subgrade elevations regardless of the character of surface and subsurface conditions encountered. Unclassified excavated materials may include rock, soil materials, and obstructions. No changes in the Contract Sum or the Contract Time will be authorized for rock excavation or removal of obstructions.

1. If excavated materials intended for fill and backfill include unsatisfactory soil materials and rock, replace with satisfactory soil materials.
2. Remove rock to lines and grades indicated to permit installation of permanent construction without exceeding the following dimensions:

    a. Twenty four-inches (24”) outside of concrete forms other than at footings.
    b. Twelve-inches (12”) outside of concrete forms at footings.
    c. Six-inches (6”) outside of minimum required dimensions of concrete cast against grade.
    d. Outside dimensions of concrete walls indicated to be cast against rock without forms or exterior waterproofing treatments.
    e. Six-inches (6”) beneath bottom of concrete slabs-on-grade.
    f. Six-inches (6”) beneath pipe in trenches, and the greater of twenty four-inches (24”) wider than pipe or forty two-inches (42”) wide.

E. Classified Excavation: Excavate to subgrade elevations. Material to be excavated will be classified as earth and rock. Do not excavate rock until it has been classified and cross sectioned by Project Manager and approved by Project Manager. The Contract Sum will be adjusted for rock excavation according to unit prices included in the Contract Documents. Changes in the Contract Time may be authorized for rock excavation.

1. Earth excavation includes excavating pavements and obstructions visible on surface; underground structures, utilities, and other items indicated to be removed; together with soil, boulders, and other materials not classified as rock or unauthorized excavation.
    a. Intermittent drilling; ram hammering; or ripping of material not classified as rock excavation is earth excavation.

2. Rock excavation includes removal and disposal of rock. Remove rock to lines and subgrade elevations indicated to permit installation of permanent construction without exceeding the following dimensions:
    a. Twenty four-inches (24”) outside of concrete forms other than at footings.

b. Twelve-inches (12”) outside of concrete forms at footings.
c. Six-inches (6”) outside of minimum required dimensions of concrete cast against grade.
d. Outside dimensions of concrete walls indicated to be cast against rock without forms or exterior waterproofing treatments.
e. Six-inches (6”) beneath bottom of concrete slabs-on-grade.
f. Six-inches (6”) beneath pipe in trenches, and the greater of twenty four-inches (24”) wider than pipe or forty two-inches (42”) wide.

3.8 EXCAVATION FOR STRUCTURES

A. Excavate to indicated elevations and dimensions shown on Contract Drawings within a tolerance of plus or minus one tenth foot (0.1’). If applicable, extend excavations a sufficient distance from structures for placing and removing concrete formwork, for installing services and other construction, and for inspections.
1. Excavations for Footings and Foundations: Do not disturb bottom of excavation. Excavate by hand to final grade just before placing concrete reinforcement. Trim bottoms to required lines and grades to leave solid base to receive other work.
2. Pile Foundations: Stop excavations six to twelve-inches (6” – 12”) above bottom of pile cap before piles are placed. After piles have been driven, remove loose and displaced material. Excavate to final grade, leaving solid base to receive concrete pile caps.

3.9 EXCAVATION FOR WALKS AND PAVEMENTS

A. See project Geotechnical Report.

B. Excavate to indicated elevations and dimensions within a tolerance of plus or minus 0.1 foot.

C. Excavate surfaces under walks and pavements to indicated lines, cross sections, elevations, and subgrades.
1. Prior to placing the pavement section, the entire subgrade should be scarified to a depth of six-inches (6”), adjusted to a moisture content near optimum and compacted as indicated in the Geotechnical Report.

3.10 SUBGRADE INSPECTION

A. Notify Project Manager when excavations have reached required subgrade.

B. If Project Manager determines that unsatisfactory soil is present, continue excavation and replace with compacted backfill or fill material as directed.

C. Proof-roll subgrade in locations identified by the Project Manager with a pneumatic-tired and loaded ten (10-wheel), tandem-axle dump truck weighing not less than fifteen (15) tons to identify soft pockets and areas of excess yielding. Do not proof-roll wet or saturated subgrades.
1. Completely proof-roll subgrade in one direction. Limit vehicle speed to three (3) mph.
2. Excavate soft spots, unsatisfactory soils, and areas of excessive pumping or rutting, as determined by Project Manager, and replace with compacted backfill or fill as directed.

D. Authorized additional excavation and replacement material will be paid for according to Contract provisions for unit prices.

E. Reconstruct subgrades damaged by freezing temperatures, frost, rain, accumulated water, or construction activities, as directed by Project Manager, without additional compensation.

3.11 SPECIAL CONDITIONS

A. Cold Weather Protection: Protect excavation bottoms against freezing when atmospheric temperature is less than thirty five degrees (35°) F.

B. Dust Control: Provide dust control to alleviate dust nuisance to the public, to adjacent properties and other work underway at the project site.

C. Unanticipated Conditions: Notify the Project Manager immediately upon finding subsurface or other conditions which are not shown or which cannot be reasonably assumed from existing surveys. Secure Project Manager's instructions before proceeding with further work in such areas.

D. Unsatisfactory Soils: Remove or otherwise correct unsanitary, sour, or otherwise unsatisfactory soil. Remove contaminated or unsuitable material from under paved areas.

E. Additional Excavation: When excavation has reached required subgrade elevations, the Contractor shall contact the testing agency, which will make an observation of conditions. If unsuitable bearing materials are encountered at required subgrade elevations, carry excavations deeper and replace excavated material as directed by the testing agency.

3.12 FILL AND BACKFILL

A. General: Place soil material in layers to required subgrade elevations, for each area classification listed below, using materials specified in this Section.
   1. Under grassed areas, use satisfactory, imported material.
   2. Under walks and pavements, use satisfactory, imported material to meet structural fill requirements.

B. Backfill excavations as promptly as work permits, but not until completion of the following:
   1. Inspection, testing, approval, and recording locations of underground utilities have been performed and recorded.
   2. Removal of all trash and debris from excavation.

3.13 PLACEMENT AND COMPACTION

A. Abide by requirements of project Geotechnical Report unless otherwise directed by Project Manager.

B. Ground Surface Preparation: Remove vegetation, debris, unsatisfactory soil materials, obstructions, and deleterious materials from ground surface prior to placement of fills. Ground surfaces that are steeper than four-to-one (4:1) (horizontal to vertical) shall be stripped of vegetation, scarified to a depth of six-inches (6") and create excavated benches to ensure that fill material will bond with the existing surface.
   1. Present remediation options to Project Manager for any soils that do not meet the specified standard proctor density to bring those soils into compliance with the specifications.

C. Place backfill and fill materials in layers not more than eight-inches (8") in loose depth for material compacted by heavy compaction equipment, and not more than four-inches (4") in loose depth for material compacted by hand-operated tampers, each layer to be compacted to meet requirements herein.

D. Before compaction, moisten or aerate each layer as necessary to provide optimum moisture content. Compact each layer to required percentage of maximum dry density or relative dry density for each area classification. Do not place backfill or fill material on surfaces that are muddy, frozen, or contain frost or ice.

E. Compaction of Fill for Hardscape Areas:
   1. Select fill material shall be placed and mixed in evenly spread layers. After each fill layer has been placed, it shall be uniformly compacted. Fill materials shall be placed such that the thickness of loose material does not exceed eight-inches (8") and the compacted lift thickness does not exceed six-inches (6").
   2. Compaction shall be obtained by the use of sheepsfoot rollers, multiple-wheel pneumatic-tired rollers, or other equipment required to meet specifications. Granular fill shall be compacted using vibratory equipment or other equipment required to meet specifications. Compaction of each layer shall be continuous over the entire area. Compaction equipment shall make sufficient passes to ensure that the required density is obtained. Refer to Paragraph 3.12.I herein for criteria.
   3. Prior to placement of any base or surfacing materials, one hundred percent (100%) of the subgrade shall be proof rolled with a fully loaded tandem-axle truck.

F. Compaction of Landscape Slope Areas:
   1. Fill slopes shall be compacted by means of sheepsfoot rollers or other suitable equipment. Compaction operations shall be continued until slopes are stable, compact to a density as specified in Paragraph 3.12.I. Permanent fill slopes shall not exceed four-to-one (4:1) (horizontal to vertical).
   2. Where natural slopes are steeper than twenty percent (20%) in grade and the placement of fill is required, cut benches shall be provided at the rate of one bench for each five feet (5') in height (minimum of two benches). Benches shall be at least ten feet (10') in width. Fill shall be placed on completed benches as outlined within this specification.

G. Control soil and fill compaction, providing minimum percentage of density specified. Correct improperly compacted areas or lifts as directed if soil density tests indicate inadequate compaction.

H. Moisture Control: Where subgrade or layer of soil material must be moisture conditioned before compaction, uniformly apply water to surface of subgrade or layer of soil material. Apply water in minimum quantity as necessary to prevent free water from appearing on surface during or subsequent to compaction operations.
   1. Moisture Content: The Contractor may be required to add moisture to the excavation materials in the stockpile area if it is not possible to obtain uniform moisture content by adding water on the fill surface. The Contractor may be required to rip or disc the fill soils to provide uniform moisture content through the soils.
   2. The application of water to the embankment materials shall be made with any type of watering equipment which will give the desired results. Water jets from the spreader shall not be directed at the embankment with such force that fill materials are washed out.
   3. Remove and replace, or scarify and air dry, soil material that is too wet to permit compaction to specified density.

4. Stockpile or spread soil material that has been removed because it is too wet to permit compaction. Assist drying by disking, harrowing, or pulverizing until moisture content is reduced to a satisfactory value.

I. Density Tests: Field density tests shall be made by the Contractor per Division 01 Section "Contractor Quality Control" locations and depths selected by the Project Manager. Where sheepsfoot rollers are used, the soil may be disturbed to a depth of several-inches. Density tests shall be taken in compacted material below the disturbed surface. When density tests indicate that the density or moisture content of any layer of fill or portion thereof is below that required, the particular layer or portion shall be reworked until the required density or moisture content has been achieved. Criteria for acceptance are as follows:

1. Under pavements and structures: Intervals and quantities of tests required shall be established by the Project Manager. On-site or imported clay materials shall be compacted to at least ninety five percent (95%) of maximum standard Proctor dry density (ASTM D 698) at moisture content within two percent (2%) of optimum. Granular material, whether imported or developed on-site, shall be moisture conditioned to within two percent (2%) of optimum and compacted to at least 95% of maximum modified Proctor dry density (ASTM D 1557).
2. Under landscape areas (top 12-inches): Eighty five percent (85%) of maximum standard Proctor dry density at moisture content within two percent (2%) of optimum (ASTM D 698).

3.14 STORAGE OF SOIL MATERIALS

A. All soil where excavation is required shall be removed and disposed of in accordance to the Materials Management Plan and the Project Specific Regulated Asbestos Contaminated Soil Materials Plan

3.15 GRADING

A. General: Uniformly grade areas within project limits of grading under this section, including adjacent transition areas. Smooth finished surface within specified tolerances, compact with uniform levels or slopes between points where elevations or contours are indicated or between such points and existing grades.

B. Subgrade tolerances are as follows:

1. Lawn or Unpaved Areas: Finish areas to receive topsoil to within not more than one tenth foot (0.10') above or below required subgrade elevations.
2. Pavements: Shape surface of areas under pavement to line, grade, and cross-section, with finish surface not more than two one-hundredths foot (0.02') above or below required subgrade elevation.

C. Under no circumstances shall variations from specified grade elevations create any ponding or retention of water on intermediate pavement levels, or finished surfaces.

3.16 PLACING STOCKPILED TOPSOIL

A. Refer to Division 32 Section "Topsoil".

3.17 FIELD QUALITY CONTROL

A. Special Inspections: Project Manager may engage a qualified special inspector to perform the inspections in addition to the Contractors requirements for testing for the purposes of verifying results of Contractor's Testing Agency.

3.18 PROTECTION

A. Protecting Graded Areas: Protect newly graded areas from traffic, freezing, and erosion. Keep free of trash and debris.

B. Repair and reestablish grades to specified tolerances where completed or partially completed surfaces become eroded, rutted, settled, or where they lose compaction due to subsequent construction operations or weather conditions.
   1. Scarify or remove and replace soil material to depth as directed by Project Manager; reshape and re-compact.

C. Where settling occurs before Project correction period elapses, remove finished surfacing, backfill with additional soil material, compact, and reconstruct surfacing.
   1. Restore appearance, quality, and condition of finished surfacing to match adjacent work.

3.19 MAINTENANCE

A. Reconditioning Compacted Areas: Where completed compacted areas are disturbed by subsequent construction operations or adverse weather, scarify surface, reshape, and compact to required density prior to further construction.

B. Settling: Where settling is measurable or observable at excavated areas during general project warranty period, remove surface (pavement, lawn, or other finish), add backfill material, compact, and replace surface treatment. Restore appearance, quality, and condition of surface or finish to match adjacent work, and eliminate evidence of restoration to greatest extent possible.

3.20 DISPOSAL OF EXCESS AND WASTE MATERIALS

A. Removal from City's Property: Remove waste materials, including materials not allowed for fill, backfill or site grading as specified within, trash, contaminated materials, and debris, and legally dispose of it off City's property at Contractor's expense. All recyclable materials shall be hauled to nearest recycling center and any non-recyclable materials shall be hauled to Denver Arapahoe Disposal Site (DADS). DADS Disposal tickets shall be provided to the Contractor by Project Manager.

B. Remove any excess fill material from the site, unless otherwise directed by the Project Manager.

C. Remove any materials determined to be hazardous or contaminated to DADS. DADS Disposal tickets or hazardous waste manifest tickets shall be provided to the Contractor by Project Manager.

D. Removal of unsuitable material and its replacement as directed will be paid on basis of Conditions of the Contract relative to changes in work.

PART 4 - MEASUREMENT AND PAYMENT

4.1 MEASUREMENT

A. Measurement will be made by the contract unit specified for Earth Moving.

4.2 PAYMENT

A. Payment will be made at contract unit price, and shall include required materials, transportation, equipment, labor, excavation, stockpiling, disposing, hauling off, importing fill, re-transporting to fill locations, watering, compaction, sub-grade preparation, measuring of subgrade to bring within tolerances, backfilling, dust control, erosion and sediment control, rough grading, fine grading, as required in accordance with the Contract Drawings and Specifications. Stripping and stockpiling of topsoil shall be paid for separately under Division 32 Section “Topsoil”.

END OF SECTION 31 20 00

SECTION 31 23 16 EXCAVATION AND BACKFILLING OF TRENCHES

PART 1 - GENERAL

1.1 RELATED DOCUMENTS

A. Contract Drawings and general provisions of the Contract, including General and Supplementary Conditions and Division 01 Specification Sections, apply to this Section.

1.2 SUMMARY

A. This Section includes requirements for the excavation and backfill for all piping, conduit, or related appurtenances, as shown on the plans and as specified herein. All work shall be done in conformance with the Detail and Technical Specifications for Storm Drainage and Sanitary Sewer Construction - 4.0 Utility Trenching and Excavation and 5.0 Bedding and Backfilling, available from Denver Wastewater Management Division.

https://www.denvergov.org/content/denvergov/en/wastewater-management/capital-projects-management/engineering-and-permits/wastewater-cap-projects-standard-construct-specs.html

https://www.denvergov.org/content/dam/denvergov/Portals/705/documents/guidelines/PWES-011.1-Wastewater_Management_Standard_Detail_Drawings.pdf

B. Related Work: Contractor shall comply with the requirements of the following Sections when installing underground utilities.
1. Division 01 Section “Layout of Work and Surveys”.
2. Division 01 Section “Tree Retention and Protection”.
3. Division 31 Section “Clearing and Grubbing”.
4. Division 31 Section “Earth Moving”.
5. Division 32 Section “Soil Preparation”.
6. Division 32 Section “Topsoil”.
7. Division 32 Section “Turfgrass Seeding”.
8. Division 32 Section “Native Seeding”.
9. Division 32 Section “Sodding”.
10. Division 32 Section “Landscape Irrigation”.
11. Division 32 Section “Automatic Irrigation Controllers”

PART 2 - PRODUCTS (Not Used)

PART 3 - EXECUTION (Not Used)

PART 4 - MEASUREMENT AND PAYMENT

4.1 MEASUREMENT

A. Measurement will be based on the percentage complete for the lump sum contract amount for Excavation and Backfilling of Trenches.

4.2 PAYMENT

A. Payment will be made at the lump sum contract price, and shall include required materials, transportation, equipment, labor, excavation, stockpiling, disposing, hauling off, importing fill, re-transporting to fill locations (from locations of excavation or from onsite stockpiles), watering, compaction, sub-grade preparation, measuring of sub-grade to bring within tolerances, backfilling, dust control, erosion and sediment control, rough grading and fine grading as required to construct in accordance with the Contract Drawings and Specifications. Stripping and stockpiling of topsoil shall be paid for separately under Division 32 Section "Topsoil".

END OF SECTION 31 23 16

SECTION 31 23 19 DEWATERING

PART 1 GENERAL

1.01 SECTION INCLUDES

A. The work of this section consists of controlling groundwater, site drainage, and storm flows during construction. CONTRACTOR is cautioned that the work involves construction in and around drainage channels, local rivers, and areas of local drainage. These areas are subject to frequent periodic inundation.

1.02 RELATED SECTIONS

A. Section 02315 – Excavation and Embankments

B. Section 02320 – Trench Excavation and Backfill

1.03 GENERAL REQUIREMENTS:

A. Contractor or Sub-Contractor responsible for installing and maintaining BMP's shall be the SUDP holder, and shall be responsible for final stabilization and close-out of the Permit.

PART 2 PRODUCTS

2.01 MATERIALS

A. On-site materials may be used within the limits of construction to construct temporary dams and berms. The materials such as plastic sheeting, sand bags, and storm sewer pipe may also be used if desired by CONTRACTOR.

PART 3 EXECUTION

3.01 CONSTRUCTION REQUIREMENTS

A. General: For all excavation, CONTRACTOR shall provide suitable equipment and labor to remove water, and he shall keep the excavation dewatered so that construction can be carried on under dewatered conditions. Water control shall be accomplished such that no damage is done to adjacent channel banks or structures. CONTRACTOR is responsible for investigating and familiarizing himself with all site conditions that may affect the work including surface water, potential flooding conditions, level of groundwater and the time of year the work is to be done. All excavations made as part of dewatering operations shall be backfilled with the same type material as was removed and compacted to 95% of Maximum Standard Proctor Density (ASTM D698) except where replacement by other materials and/or methods are required.

CONTRACTOR shall conduct his operation in such a manner that storm or other waters may proceed uninterrupted along their existing drainage courses. By submitting a bid, CONTRACTOR acknowledges that he has investigated the risk arising from such waters and has prepared his bid accordingly, and assumes all of said risk.

At no time during construction shall CONTRACTOR affect existing surface or subsurface drainage patterns of adjacent property. Any damage to adjacent property resulting from

CONTRACTOR's alteration of surface or subsurface drainage patterns shall be repaired by CONTRACTOR at no additional cost to OWNER.

CONTRACTOR shall remove all temporary water control facilities when they are no longer needed or at the completion of the project.

Pumps and generators used for dewatering and water control shall be quiet equipment enclosed in sound deadening devices.

B. Surface Water Control: Surface water control generally falls into the following categories:

1. Normal low flows along the channel;

2. Storm/flood flows along the channel;

3. Flows from existing storm drain pipelines; and,

4. Local surface inflows not conveyed by pipelines.

CONTRACTOR shall coordinate, evaluate, design, construct, and maintain temporary water conveyance systems. These systems shall not worsen flooding, alter major flow paths, or worsen flow characteristics during construction. CONTRACTOR is responsible to ensure that any such worsening of flooding does not occur. CONTRACTOR is solely responsible for determining the methods and adequacy of water control measures.

At a minimum, CONTRACTOR shall be responsible for diverting the quantity of surface flow around the construction area so that the excavations will remain free of surface water for the time it takes to install these materials, and the time required for curing of any concrete or grout. CONTRACTOR is cautioned that the minimum quantity of water to be diverted is for erosion control and construction purposes and not for general protection of the construction-site. It shall be CONTRACTOR's responsibility to determine the quantity of water which shall be diverted to protect his work from damage caused by storm water.

CONTRACTOR shall, at all times, maintain a flow path for all channels. Temporary structures such as berms, sandbags, pipeline diversions, etc., may be permitted for the control of channel flow, as long as such measures are not a major obstruction to flood flows, do not worsen flooding, or alter historic flow routes.

C. Groundwater Control: CONTRACTOR shall install adequate measures to maintain the level of groundwater below the foundation subgrade elevation and maintain sufficient bearing capacity for all structures, pipelines, earthwork, and rock work. Such measures may include, but are not limited to, installation of perimeter subdrains, pumping from drilled holes or by pumping from sumps excavated below the subgrade elevation. Dewatering from within the foundation excavations shall not be allowed. The foundation bearing surfaces are to be kept dewatered and stable until the structures or other types of work are complete and backfilled. Disturbance of foundation subgrade by CONTRACTOR operations shall not be considered as originally unsuitable foundation subgrade and shall be repaired at CONTRACTOR's expense.

Any temporary dewatering trenches or well points shall be restored following dewatering operations to reduce permeability in those areas as approved by the ENGINEER.

PART 4 MEASUREMENT AND PAYMENT

1.1 MEASUREMENT

A. Measurement will be based on the percentage complete for the lump sum contract amount for dewatering.

1.2 PAYMENT

A. Payment will be made at the lump sum contract price, and shall include required materials, transportation, equipment, labor, and all other items required to complete the work as required in accordance with the Contract Drawings and Specifications.

END OF SECTION 31 23 19

SECTION 31 32 50 WATERING

PART 1 - GENERAL

1.1 RELATED DOCUMENTS

A. Contract Drawings and general provisions of the Contract, including General and Supplementary Conditions and Division 01 Specification Sections, apply to this Section.

1.2 SUMMARY

A. This Section includes requirements for furnishing, hauling, and applying water required for compaction of embankments, backfills, sub-grade, and for landscaping, dust control, and other construction operations.

B. Related Sections:
1. Division 01 Section “Erosion and Sedimentation Control”.
2. Division 31 Section “Earth Moving”.
3. Division 31 Section “Excavation and Backfilling of Trenches.
4. Division 32 Section “Aggregate Base Course”.
5. Division 32 Section “Turfgrass Seeding”.
6. Division 32 Section “Native Seeding”.
7. Division 32 Section “Sodding”.
8. Division 32 Section “Trees, Plants, and Groundcovers”.

PART 2 - PRODUCTS

2.1 WATER

A. If water supply is from a hydrant, the Contractor shall supply a Denver Water approved and calibrated water meter to measure water usage and be responsible to pay all costs related to water usage. The cost of water shall be charged at the current City and County of Denver rate through Denver Water.

B. Water applied for moisture density control, pre-wetting, and as dust palliative shall be free of debris, organic matter, and other objectionable substances.

C. Water for landscaping shall be free from oils, acids, salts or any substance that may be harmful to plant life. Non-potable water may be accepted on a case-by-case basis as approved by Project Manager.

D. When the water source proposed for use by the Contractor is not known, the Contractor shall provide an analysis of water samples from an approved testing laboratory. The analysis shall be provided to the Project Manager prior to use.

PART 3 - EXECUTION

3.1 WATER TRUCK

A. At least one water truck shall be on site or as directed by Project Manager.
   1. Truck shall have capacity of at least one-thousand (1,000) gallons, or be of adequate size related to the scope of work or as directed by the Project Manager.
   2. Water is to be metered for measurement, the Contractor shall provide and use an approved Denver Water metering device.
   3. Monthly water usage readings either from the vehicle or from a meter are to be provided to the Project Manager

3.2 APPLICATION

A. Pressure type distributors or a pipeline equipped with sprinkler system.

B. Moisture and Density Control: Ensure a uniform and controlled application of water without ponding or causing erosion for optimum moisture content.

C. Pre-wetting: Pre-wetting material in excavation areas prior to removal for placement in embankments will be allowed as approved by the Project Manager. Prior to excavation the Contractor shall drill, bore or dig test holes to the full depth of excavation to determine moisture requirements. The contractor will identify and confirm with the Project Manager the areas for pre-wetting, including equipment to be used for the pre-wetting operations.

D. Landscape Watering: The Contractor shall provide water for seeding, mulching, planting, transplanting, sodding, herbicide treatment, maintenance operations including watering during warranty periods or any other landscape related activities when called out on the Contract Drawings or Specifications.

E. If overwatering occurs during any of the above operations, de-water at no additional expense to the City.

PART 4 - MEASUREMENT AND PAYMENT

4.1 MEASUREMENT

A. Measurement will be based on the percentage complete for the lump sum contract amount for Watering.

4.2 PAYMENT

A. Payment will be made at the lump sum contract price, and shall include required materials, transportation, equipment, lab as required in accordance with the Contract Drawings and Specifications.

END OF SECTION 31 32 50

DIVISION 32 – EXTERIOR IMPROVEMENTS

SECTION 320513 CU-STRUCTURAL SOIL® SPECIFICATIONS

1.1 GENERAL

A. The work of this section consists of all Structural Soil work and related items as indicated on the drawings or as specified herein and includes, but is not limited to, the following:

CU-Structural Soil®.or approved equal.. For a list of licensed CU-Soil™ producers, call AMEREQ, INC. at 800-832-8788.

1.2 REFERENCES AND STANDARDS

A. The following references are used herein and shall mean:

1. ASTM: American Society of Testing Materials
2. USDA: United States Department of Agriculture
3. AASHTO: American Association of State Highway and Transportation Officials
4. Standard Specifications: Regional or Municipal Standard Specifications Documentation for the location of proposed usage
5. AOAC: Association of Official Agricultural Chemists

1.3 SAMPLES AND SUBMITTALS

A. At least 30 days prior to ordering materials, the installing contractor shall submit to the engineer representative samples, certificates, manufacturer's literature and test results for materials specified below. No materials shall be ordered until the required samples, certificates, manufacturer's literature, producer's current license and test results have been reviewed and approved by the landscape architect and/or engineer. The engineer reserves the right to reject any material that does not meet CU-Structural Soil® specifications. Delivered materials shall closely match the approved samples.

B. Submit from licensed producer, 1/2 cubic foot representative sample of clay loam, one cubic foot representative sample of crushed stone, and one cubic foot representative sample of CU-Structural Soil® mix for approval. In the event of multiple source fields for clay loam, submit a minimum of one set of samples per source field or stockpile. The samples of all clay loam, crushed stone, and CU-Structural Soil® shall be submitted to the engineer as a record of the soil color and texture.

C. Submit soil test analysis reports for sample of clay loam from an independent soil-testing laboratory. The testing laboratory for particle size and chemical analysis may include a public agricultural extension service agency.

1. Submit a mechanical analysis of the clay loam sample and particle size analysis including the following gradient of mineral content:

USDA Designation Size in mm.
Gravel +2 mm
Sand 0.05 – 2 mm
Silt 0.002-0.05 mm
Clay minus 0.002 mm

2. Sieve analysis shall be performed and compared to USDA Soil Classification System.

3. Sieve analysis shall be done by a combined hydrometer and wet sieving using sodium hexametaphosphate as a dispersant in compliance with ASTM D422 after destruction of organic matter by hydrogen peroxide.

4. Submit a chemical analysis, performed in accordance with current AOAC Standards, including the following:

a. pH and buffer pH.

b. Percent organic matter as determined by the loss of ignition of oven dried samples. Test samples shall be oven dried to a constant weight at a temperature of 230 degrees F, plus or minus 9 degrees.

c. Analysis for nutrient levels by parts per million.

d. Soluble salt by electrical conductivity of a 1:2 soil/water sample measured in Millimho per cm.

e. Cation Exchange Capacity (CEC).

f. Carbon/Nitrogen Ratio.

D. Submit one cubic foot sample of crushed stone which will be used in production of CU-Soil™.

1. Provide particle size analysis:

USDA Designation Size in mm.
3” +76 mm
21/2” 63-76 mm
2” 50-63 mm
11/2” 37-50 mm
1” 25-37 mm
¾” 19-25 mm
Fine gravel 2-19 mm

2. Provide the manufacturers analysis of the loose and rodded unit weight

3. Losses from LA Abrasion tests- not to exceed 40%

4. Minimum 90% with 2 or more fractured faces

5. Percent pore space analysis

E. At the engineer’s discretion, the sample of CU-Structural Soil® may be tested for the following:

1. Compaction in accordance with ASTM D698/AASHTO T99 without removing oversize aggregate

2. California Bearing Ratio in accordance with ASTM D1883- soaked CBR shall equal or exceed a value of 50

3. Measured dry-weight percentage of stone in the mixture

F. The approved CU-Structural Soil® sample shall be the standard.

G. Any deviation from the specified crushed stone and clay loam specifications shall be approved by Amereq, Inc.

1.4 DELIVERY, STORAGE AND HANDLING

A. Delivered CU-Structural Soil® shall be at or near optimum compaction moisture content as determined by AASHTO T 99 (ASTM D 698) and should not be placed in frozen, wet or muddy sites.

B. Protect CU-Structural Soil® from exposure to excess water and from erosion at all times. Do not store CU-Soil™ unprotected. Do not allow excess water to enter site prior to compaction. If water is introduced into the CU-Soil™ after grading, allow water to drain to optimum compaction moisture content.

1.5 EXAMINATION OF CONDITIONS

A. All areas to receive CU-Structural Soil® shall be inspected by the installing contractor before starting work and all defects such as incorrect grading, compaction, and inadequate drainage shall be reported to the engineer prior to beginning this work.

1.6 QUALITY ASSURANCE

A. Qualifications of installing contractor: The work of this section should be performed by a contracting firm which has a minimum of five years experience. Proof of this experience shall be submitted as per paragraph, SAMPLES and SUBMITTALS, of this section.

PART 2 - MATERIALS

2.1 CLAY LOAM

A. Soil shall be a “loam” with a minimum clay content of 20% or a “clay loam” based on the “USDA classification system” as determined by mechanical analysis (ASTM D-422) and it shall be of uniform composition, without admixture of subsoil. It shall be free of stones, lumps, plants and their roots, debris and other extraneous matter. It shall not contain toxic substances harmful to plant growth. Clay loam shall contain not less than 2% or more than 5% organic matter as determined by the loss on ignition of oven-dried samples. Test samples shall be oven-dried to a constant weight at a temperature of 230 degrees F., plus or minus 9 degrees.

B. Mechanical analysis for the loam or clay loam shall be as follows:

Textural Class % of Total Weight
Gravel less than 5%
Sand 20-45%
Silt 20-50%

Clay 20-40%

C. Chemical analysis: Meet, or be amended to meet the following criteria:

1. pH between 5.5 to 6.5
2. Percent organic matter 2% - 5% by dry weight
3. Adequate nutrient levels
4. Soluble salt less than 1.0 mmho/cm

5. Cation Exchange Capacity (CEC) greater than 10
6. Carbon/Nitrogen ratio less than 33:1

D. Loam or clay loam shall not come from USDA - classified prime farmland.

2.2 FERTILIZER (if needed)

A. Should nutrient analysis suggest that the loam or clay loam need additional nutrients, it shall be amended by Amereq's licensed producer.

2.3 SULFUR (if needed)

A. Sulfur shall be a commercial granular, 96% pure sulfur, with material and analysis appearing on the labeled container.

B. Sulfur used to lower pH shall be a ferrous sulfate formulation.

C. Application rates shall be dependent on soil test results.

2.4 LIME (if needed)

A. Agricultural lime containing a minimum of 85% carbonates.

B. Application rates shall be dependent on soil test results.

2.5 CRUSHED STONE

A. The size of the crushed stone shall be 0.75 inches to 1.5 inches allowing for up to 10% being greater than 1.5 inches, and up to 10% less than 0.75 inches.

B. Acceptable aggregate dimensions will not exceed 2.5:1.0 for any two dimensions.

C. Minimum 90% with two or more fractured faces.

D. Results of Aggregate Soundness Loss test shall not exceed 18%.

E. Losses from LA Abrasion tests shall not exceed 40%.

2.6 HYDROGEL

A. Hydrogel shall be a coated potassium propenoate-propenamide copolymer (Gelscape® Hydrogel Tackifier) as manufactured by Amereq, Inc. 800-832-8788.

2.7 WATER

A. The installing contractor shall be responsible to furnish his own supply of water (if needed) free of impurities, to the site.

2.8 CU-STRUCTURAL SOIL®

A. A uniformly blended urban tree mixture of crushed stone, clay loam and Gelscape® Hydrogel Tackifier, as produced by an Amereq-licensed company, mixed in the following proportion:

Material Unit of Weight
specified crushed Stone 100 units dry weight
specified clay loam 20 – 25 units (to achieve minimum CBR of 50)
Gelscape® Hydrogel Tackifier 0.035 units dry weight
moisture ASTM D698/AASHTO T-99 optimum moisture

PART 3 - PRODUCTION AND INSTALLATION GUIDELINES

3.1 CU-SOIL™ MIXING AND QUALITY CONTROL TESTING

A. All CU-Structural Soil® mixing shall be performed at the licensed producer's yard using appropriate soil measuring, mixing and shredding equipment of sufficient capacity and capability to assure proper quality control and consistent mix ratios. No mixing of CU-Structural Soil® at the project site shall be permitted.

Maintain adequate moisture content during the mixing process. Soils and mix components shall easily shred and break down without clumping. Soil clods shall easily break down into a fine crumbly texture. Soils shall not be overly wet or dry. The licensed producer shall measure and monitor the amount of soil moisture at the mixing site periodically during the mixing process.

B. Raw materials shall be mixed off-site, only at the licensed producer's facility, on a flat asphalt or concrete paved surface to avoid soil contamination.

C. Should the independent laboratory test results of the clay loam reveal a need to amend it, to meet specifications, the amending materials should be added to the clay loam following the rates and recommendations provided by Amereq.

3.2 UNDERGROUND UTILITIES AND SUBSURFACE CONDITIONS

A. The installing contractor shall notify the engineer of any subsurface conditions which will affect the contractor's ability to install the CU-Soil™.

B. The installing contractor shall locate and confirm the location of all underground utility lines and structures prior to the start of any excavation.

C. The installing contractor shall repair any underground utilities or foundations damaged during the progress of this work.

3.3 SITE PREPARATION

A. Do not proceed with the installation of the CU-Structural Soil® material until all walls, curb footings and utility work in the area have been installed. For site elements dependent on CU-

Structural Soil® for foundation support, postpone installation of such elements until immediately after the installation of CU-Structural Soil®.

B. Install subsurface drain lines as shown on the plan drawings prior to installation of CU-Structural Soil® material.

C. Excavate and compact the proposed subgrade to depths, slopes and widths as shown on the drawings. Maintain all required angles of repose of the adjacent materials as shown on the drawings. Do not over excavate compacted subgrades of adjacent pavement or structures.

D. Confirm that the subgrade is at the proper elevation and compacted as required. Subgrade elevations shall slope parallel to the finished grade and/or toward the subsurface drain lines as shown on the drawings.

E. Clear the excavation of all construction debris, trash, rubble and any foreign material. In the event that fuels, oils, concrete washout silts or other material harmful to plants have been spilled into the subgrade material, excavate the soil sufficiently to remove the harmful material. Fill any over excavation with approved fill and compact to the required subgrade compaction.

F. Do not proceed with the installation of CU-Structural Soil® until all utility work in the area has been installed. All subsurface drainage systems shall be operational prior to installation of CU-Structural Soil®.

G. Protect adjacent walls, walks and utilities from damage. Use ½" plywood and/or plastic sheeting as directed to cover existing concrete, metal and masonry work and other items as directed during the progress of the work.

1. Clean up all trash and any soil or dirt spilled on any paved surface at the end of each working day.

2. Any damage to the paving or architectural work caused by the installing contractor shall be repaired, as directed by the engineer.

H. Maintain all silt and sediment control devices required by applicable regulations. Provide adequate methods to assure that trucks and other equipment do not track soil from the site onto adjacent property and the public right of way.

3.4 INSTALLATION OF CU-STRUCTURAL SOIL® MATERIAL

A. Install CU-Structural Soil® in 6 inch lifts and compact each lift.

B. Compact all materials to at least 95% Proctor Density from a standard compaction curve AASHTO T 99 (ASTM D 698). No compaction shall occur when moisture content exceeds maximum as listed herein. Delay compaction if moisture content exceeds maximum allowable and protect CU-Structural Soil® during delays in compaction with plastic or plywood as directed by the engineer.

C. Bring CU-Structural Soil® to finished grades as shown on the drawings. Immediately protect the CU-Structural Soil® from contamination by toxic materials, trash, debris, water containing cement, clay, silt or materials that will alter the particle size distribution of the mix with plastic or plywood as directed by the engineer.

D. The engineer may periodically check the material being delivered, prior to installation for color and texture consistency with the approved sample provided by the installing contractor as part of the submittal for CU-Structural Soil®. If the engineer determines that the delivered CU-Soil™ varies significantly from the approved samples, the engineer shall contact the licensed producer.
E. Engineer shall ensure that the delivered structural soil was produced by the approved CU-Soil™ licensee by inspecting weight tickets showing source of material.

F. CU-Soil™ should not be stockpiled long-term. Any CU-Soil™ not installed immediately should be protected by a tarp or other waterproof covering.

3.5 FINE GRADING

A. After the initial placement and rough grading of the CU-Structural Soil® but prior to the start of fine grading, the installing contractor shall request review of the rough grading by the engineer. The installing contractor shall set sufficient grade stakes for checking the finished grades.

B. Adjust the finish grades to meet field conditions as directed.

1.Provide smooth transitions between slopes of different gradients and direction.

2. Fill all dips with CU-Soil™ and remove any bumps in the overall plane of the slope.

3. The tolerance for dips and bumps in CU-Structural Soil® areas shall be a 3” deviation from the plane in 10’.

4. All fine grading shall be inspected and approved by the engineer prior to the installation of other items to be placed on the CU-Structural Soil®.

C. The engineer will inspect the work upon the request of the installing contractor. Request for inspection shall be received by the engineer at least 10 days before the anticipated date of inspection.

3.6 ACCEPTANCE STANDARDS

A. The engineer will inspect the work upon the request of the installing contractor. Request for inspection shall be received by the engineer at least 10 days before the anticipated date of inspection.

3.7 CLEAN-UP

A. Upon completion of the CU-Structural Soil® installation operations, clean areas within the contract limits. Remove all excess fills, soils and mix stockpiles and legally dispose of all waste materials, trash and debris. Remove all tools and equipment and provide a clean, clear site. Sweep, do not wash, all paving and other exposed surfaces of dirt and mud until the paving has been installed over the CU-Structural Soil® material. Do no washing until finished materials covering CU-Structural Soil® material are in place.

PART 4 - MEASUREMENT AND PAYMENT

1.1 MEASUREMENT

A. Measurement will be made by the contract unit specified for CU Structural Soil.

1.2 PAYMENT

A. Payment will be made at the contract unit price, and shall include required materials, transportation, equipment, labor, excavation, stockpiling, disposing, hauling off, watering, dust control, erosion and sediment control, compaction, sub-grade preparation, placement, and all other items required to complete the work as required in accordance with the Contract Drawings and Specifications.

END OF SECTION 32 05 13

SECTION 32 11 16 AGGREGATE BASE COURSE

PART 1 - GENERAL

1.1 RELATED DOCUMENTS

A. Contract Drawings and general provisions of the Contract, including General and Supplementary Conditions and Division 01 Specification Sections, apply to this Section.

1.2 SUMMARY

A. This Section includes the requirements for furnishing and placing crushed aggregate, bonded with fine aggregate, constructed on a prepared underlying course in accordance with these specifications and in conformity with the dimensions, typical cross section, and the lines and grades shown on the Contract Drawings. The locations where aggregate base course will be used are shown on the Contract Drawings.

B. Related Sections:
1. Division 01 Section “Layout of Work and Surveys”.
2. Division 01 Section “Contractor Quality Control”.
3. Division 01 Section “Erosion and Sedimentation Control”.
4. Division 31 Section “Earth Moving”.
5. Division 32 Section “Asphalt Pavement”.
6. Division 32 Section “Concrete Walks, Curbs, and Miscellaneous Flatwork”.

1.3 SUBMITTALS

A. See Division 01 Section “Submittals” for submittal requirements.

B. Certification: Contractor shall provide a certificate of compliance for any imported Aggregate Base Course materials.

C. Gradation and Standard Proctor Density Test Results: For imported backfill materials, at a minimum, submit results of gradation tests and standard proctor density test.

D. Sample: Provide a 1-pound (1#) sample of material(s) for approval.

PART 2 - PRODUCTS

2.1 AGGREGATE BASE COURSE

A. Aggregate base course shall meet the requirements of Item 703.03 of the Standard Specifications for Road and Bridge Construction of the Colorado Department of Highways, latest revision for Class five (5) or Class (6), or as specified by the Soils Engineer and on Contract Drawings.

2.2 RECYCLED CONCRETE

A. May be substituted for five (5) or Class (6) Aggregate, if acceptable to the Project Manager.

2.3 AGGREGATE

A. The use of this term implies the use of Aggregate Base Course within this Section only.

PART 3 - EXECUTION

3.1 EQUIPMENT

A. All equipment necessary for the proper construction of this work shall be in working condition, and shall be free of fluid leaks. Project Manager reserves the right to have any piece of equipment removed from the site if it is deemed inoperable and/or is leaking fluids.

3.2 PREPARING SUBGRADE

A. The underlying subgrade or base course shall be tested at the Contractors expense and accepted by the Project Manager before placing and spreading operations are started. See Division 01 Section “Contractor Quality Control”.

3.3 METHOD OF SPREADING

A. The aggregate material shall be placed on the prepared underlying course and compacted in layers not to exceed six-inches (8”) in depth before compaction. The depositing and spreading of material shall commence where designated and shall progress continuously without breaks. The material shall be deposited and spread in a uniform layer and without segregation of size to a uniform thickness.

B. The aggregate spread shall be of uniform grading with no pockets of fine or course materials. During the spreading process, sufficient caution shall be exercised to prevent the incorporation of underlying materials in the aggregate.

3.4 COMPACTION OF AGGREGATE BASE COURSE

A. When aggregate base course is used as part of asphalt roadway system (asphalt and base course composite section), the aggregate base course shall be compacted to 95% of Modified Proctor per ASTM D-1557, within 2% of optimum moisture.

B. Aggregate material shall be placed and mixed in evenly spread layers. After each fill layer has been placed, it shall be uniformly compacted. Fill materials shall be placed such that the thickness of loose material does not exceed eight-inches (8”) and the compacted lift thickness does not exceed six-inches (6”).

C. Compaction shall be obtained by the use of vibratory rollers, multiple-wheel pneumatic-tired rollers, or other equipment approved by the Project Manager. Granular fill shall be compacted using vibratory equipment or other equipment approved by the Project Manager. Compaction of each layer shall be continuous over the entire area. Compaction equipment shall make sufficient passes to ensure that the required density is obtained.

D. Prior to placement of any base or surfacing materials, one-hundred percent (100%) of the subgrade shall be proof rolled with a fully loaded tandem-axle truck.

3.5 PROTECTION

A. Spreading of aggregate shall not take place when temperatures are below freezing. When the aggregate base course contains frozen material or the underlying subgrade is frozen, construction shall not occur.

3.6 MAINTENANCE

A. Following the completion of the base course, the Contractor shall perform all maintenance work necessary to keep the aggregate in a satisfactory condition until acceptance of the project. The surface shall be kept clean and free from foreign material. The base course shall be properly drained at all times. Any work, maintenance or necessary repairs shall be performed at the expense of the Contractor.

PART 4 - MEASUREMENT AND PAYMENT

4.1 MEASUREMENT

A. Measurement will be made by the contract unit specified for Aggregate Base Course.

4.2 PAYMENT

A. Payment will be made at the contract unit price, and shall include required materials, transportation, equipment, labor, excavation, de-watering, stockpiling, placement, grading, compaction, hauling off, watering, dust control, erosion and sediment control, as required in accordance with the Contract Drawings and Specifications.

END OF SECTION 32 11 16

SECTION 32 12 16 ASPHALT PAVEMENT

PART 1 - GENERAL

1.1 RELATED DOCUMENTS

A. Contract Drawings and general provisions of the Contract, including General and Supplementary Conditions and Division 01 Specification Sections, apply to this Section.

1.2 SUMMARY

A. This Section includes requirements for the following:
1. Constructing one or more surface courses composed of a mixture of aggregate, filler if required, and bituminous material, placed on a prepared base.
2. Asphalt surface treatments.
3. Pavement-marking paint.

B. Related Sections:
1. Division 01 Section “Layout of Work and Surveys”.
2. Division 01 Section “Contractor Quality Control”.
3. Division 01 Section “Erosion and Sedimentation Control”.
4. Division 01 Section “Material and Equipment”.
5. Division 31 Section “Earth Moving”.
6. Division 31 Section “Excavation and Backfilling of Trenches”.
7. Division 32 Section “Aggregate Base Course”.
8. Division 32 Section “Concrete Walks, Curbs and Miscellaneous Flatwork”.
9. Division 32 Section “Traffic Markings”.

1.3 REFERENCES

A. Plant mix pavements for this project shall be done in accordance the Metropolitan Government Pavement Engineers Council (MGPEC) Specification Item 20 for Hot Mix Asphalt Pavement (HMA) and Stone Matrix Asphalt (SMA). The latest issue is available from www.Mgpec.org.

B. The MGPEC specifications to be used for this project are written as a stand-alone document. Included with the specifications Item 20 for mix identifying Asphalt Mixture criteria (grading, binder, %RAP and design level).

1.4 SUBMITTALS

A. See Division 01 Section “Submittals” for submittal requirements.

B. Mix Designs: Submit substantiating data for each Asphalt mix design specified for use to the Project Manager not less than four (4) weeks prior to first Asphalt placement. Data for each mix shall, as a minimum, include the following:
1. Mix identification designation (unique for each mix submitted).
2. Statement of intended use for each mix.
3. Mix proportions.

C. Shop Drawings: Indicate pavement markings, lane separations, and defined parking spaces. Indicate, with international symbol of accessibility, spaces allocated for people with disabilities.

D. Samples: For each paving fabric, twelve-inches (12”) by twelve-inches (12”) minimum.

E. Samples for Verification: For the following products, in manufacturer's standard sizes unless otherwise indicated:
1. Each paving fabric, twelve-inches (12”) by twelve-inches (12”) minimum.
2. Each type and color of preformed traffic-calming device.
3. Each pattern and color of imprinted asphalt.

1.5 QUALITY CONTROL

A. Installer Qualifications: Submit supportive documentation as to the asphalt installer’s qualifications relative to training and experience for installation of asphalt required for this Project. Installer to have been in business in the State of Colorado continuously for a minimum of five (5) years, and can prove experience on completed jobs of similar scope and complexity.

B. Preinstallation Conference: Conduct conference at Project Site.
1. Review methods and procedures related to hot-mix asphalt paving including, but not limited to, the following:
   a. Review proposed sources of paving materials, including capabilities and location of plant that will manufacture hot-mix asphalt.
   b. Review condition of subgrade and preparatory work.
   c. Review requirements for protecting paving work, including restriction of traffic during installation period and for remainder of construction period.
   d. Review and finalize construction schedule and verify availability of materials, Installer's personnel, equipment, and facilities needed to make progress and avoid delays.

C. Quality Control: The Contractor is responsible for Quality Control Testing, including workmanship and materials furnished by his subcontractors and suppliers.
1. Per MGPEC requirements.
2. Inspection or testing does not relieve the Contractor of his responsibility to perform the Work in accordance with the Contract Documents.
3. Contractor is responsible for proof rolling and or testing of all sub-grade prior to placement of Aggregate Base Course. The Contractor shall verbally or in writing inform the Project Manager the day of any failed or passed tests.
4. The Project Manager shall be notified a minimum of forty-eight (48) hours prior to the dates of concrete placement and testing.
5. Contractor shall provide written test results within forty-eight (48) hours of receiving results from testing agency.
6. Should a test result come back as failed, the Contractor is responsible for removal, disposal and replacement of failed sections until specifications have been met. This work shall be completed at no additional cost to the City.
7. City reserves the right to provide Quality Assurance testing at any time during the project.

D. Testing:
1. Contractor is responsible for providing Quality Control testing through a third party testing agency. The third party testing agency will provide testing at random locations

and times as directed by the Project Manager to insure that quality Control standards are being achieved.

1.6 DELIVERY, STORAGE, AND HANDLING

A. Deliver pavement-marking materials to Project site in original packages with seals unbroken and bearing manufacturer's labels containing brand name and type of material, date of manufacture, and directions for storage.

B. Store pavement-marking materials in a clean, dry, protected location within temperature range required by manufacturer. Protect stored materials from direct sunlight.

1.7 PROJECT CONDITIONS

A. Environmental Limitations: Do not apply asphalt materials if subgrade is wet or excessively damp, if rain is imminent or expected before time required for adequate cure, or if the following conditions are not met:
1. Prime Coat: Minimum surface temperature of sixty (60) deg F.
2. Tack Coat: Minimum surface temperature of sixty (60) deg F.
3. Slurry Coat: Comply with weather limitations in ASTM D 3910.
4. Asphalt Base Course: Minimum surface temperature of forty (40) deg F and rising at time of placement.
5. Asphalt Surface Course: Minimum surface temperature of sixty (60) deg F at time of placement.

B. Pavement-Marking Paint: Proceed with pavement marking only on clean, dry surfaces and at a minimum ambient or surface temperature of forty (40) deg F for oil-based materials fifty five (55) deg F for water-based materials, and not exceeding ninety-five (95) deg F.

PART 2 - PRODUCTS

2.1 ASPHALT MIX: Refer to MGPEC Specification: The latest issue is available from www.Mgpec.org.

A. Item 7- Aggregate Base Course

B. Item 20-Hot Mix Asphalt Pavement (HMA) and Stone Matrix Asphalt (SMA).

C. Item 22- Paving Fabric

2.2 PAVEMENT MARKING PAINT AND ASSOCIATED MATERIALS

A. Alkyd-resin type, lead and chromate free, ready mixed, complying with AASHTO M 248, [**Type N**] [**Type F**] [**Type S**]; colors complying with FS TT-P-1952.
1. Color: [**White**] [**Yellow**] [**Blue**] [**As indicated**]

B. Pavement-Marking Paint: MPI #32 Alkyd Traffic Marking Paint.
1. Color: [**White**] [**Yellow**] [**Blue**] [**As indicated**]

C. Pavement-Marking Paint: Latex, waterborne emulsion, lead and chromate free, ready mixed, complying with FS TT-P-1952, Type II, with drying time of less than [**three**] [**45**] minutes.
1. Color: [**White**] [**Yellow**] [**Blue**] [**As indicated**] <**Insert color**>.

D. Pavement-Marking Paint: MPI #97 Latex Traffic Marking Paint.
1. Color: [**White**] [**Yellow**] [**Blue**] [**As indicated**] <**Insert color**>.

2.3 AUXILLIARY MATERIALS

A. Glass Beads: AASHTO M 247, Type 1.

PART 3 - EXECUTION

3.1 EXAMINATION

A. Verify that subgrade is dry and in suitable condition to begin paving.

B. Proof-roll subgrade below pavements with heavy pneumatic-tired equipment to identify soft pockets and areas of excess yielding. Do not proof-roll wet or saturated subgrades.
1. Completely proof-roll subgrade in one direction, repeating proof-rolling in direction perpendicular to first direction. Limit vehicle speed to 3 mph.
2. Proof roll with a loaded 10-wheel, tandem-axle dump truck weighing not less than fifteen (15) tons.
3. Excavate soft spots, unsatisfactory soils, and areas of excessive pumping or rutting, as determined by Project Manager, and replace with compacted backfill or fill as directed.

C. Proceed with paving only after unsatisfactory conditions have been corrected.

D. Verify that utilities, traffic loop detectors, and other items requiring a cut and installation beneath the asphalt surface have been completed and that asphalt surface has been repaired flush with adjacent asphalt prior to beginning installation of imprinted asphalt.

3.2 REFERENCE STANDARD: Refer to MGPEC Specification. The latest issue is available from www.Mgpec.org.

A. Item 5- Stabilized Subgrade

B. Item 7- Aggregate Base Course

C. Item 20-Hot Mix Asphalt Pavement (HMA) and Stone Matrix Asphalt (SMA).

D. Item 22- Paving Fabric

E. Items 13A through 19 pertaining to cutting, sealing and patching.

3.3 QUALITY CONTROL

A. Record of Work: Contractor to keep a record listing the time and date of placement of all asphalt materials. Such record shall be kept until the completion of the project and shall be

available to the Project Manager for examination at any time. A copy of the record shall be kept and included as part of the O&M manuals at project closeout.

B. Manufacturer Qualifications: Submit supportive documentation as to the paving mix manufacturer's qualifications, registered with and approved by Project Manager. Manufacturer is to have been in business in the State of Colorado continuously for a minimum of five (5) years.

C. Installer Qualifications: Submit supportive documentation as to the asphalt installer's qualifications relative to training and experience for installation of asphalt required for this Project. Installer to have been in business in the State of Colorado continuously for a minimum of 5 years, and can prove experience on completed jobs of similar scope and complexity.

D. Regulatory Requirements: Comply with materials, workmanship, and other applicable requirements of Denver Department of Public Works for asphalt paving work.
   1. Measurement and payment provisions and safety program submittals included in standard specifications do not apply to this Section.

3.4 ASPHALT PAVEMENTS

A. Pavement sections shall be installed in accordance to the project geotechnical report and MGPEC, following the more stringent of the two sources.
   1. Parking Lot Asphalt Pavement:
      a. Sub-grade shall be reconditioned to a minimum depth of 8-inches or as required per the geotechnical data, whichever is greater. The sub-grade shall be moisture conditioned and compacted to ninety-five percent (95%) of Standard Proctor for ABC.
      b. Base course shall be a minimum six-inch (6") thickness, moisture conditioned and compacted to ninety-five percent (95%) of Standard Proctor in accordance with MGPEC Item 7.
      c. Parking areas shall have a minimum asphalt thickness of five inches (5").
      d. Total thickness of pavement section is eleven-inches (11").

   2. Main drive isles Asphalt Pavement:
      a. Sub-grade shall be reconditioned to a minimum depth of 8-inches or as required per the geotechnical data, whichever is greater. The sub-grade shall be moisture conditioned and compacted to ninety-five percent (95%) of Standard Proctor.
      b. Base course shall be a minimum six-inches (6") thickness, moisture conditioned and compacted to ninety-five percent (95%) of Standard Proctor in accordance with MGPEC Item 7.
      c. Main drive aisles shall have a minimum asphalt thickness of six inches (6").
      d. Total thickness of pavement section shall be twelve inches (12").

3.5 PATCHING AND REPAIRS

A. Refer to MGPEC Items 19, 23, and 27.

3.6 SURFACE PREPARATION

A. Refer to MGPEC Item 20.

3.7 PAVING GEOTEXTILE INSTALLATION

A. Apply tack coat uniformly to existing pavement surfaces at a rate of two tenths (0.20) to three tenths (0.30) gal./sq. yd.

B. Place paving geotextile promptly according to manufacturer's written instructions. Broom or roll geotextile smooth and free of wrinkles and folds. Overlap longitudinal joints four inches (4") and transverse joints 6-inches.
   1. Protect paving geotextile from traffic and other damage and place hot-mix asphalt paving overlay the same day.

3.8 SURFACE TREATMENTS

A. Fog Seal: Refer to MGPEC Item 24.

B. Chip Seal: Refer to MGPEC Item 25.

C. Slurry Seals: Refer to MGPEC Item 26.

3.9 PAVEMENT MARKING

A. Do not apply pavement-marking paint until layout, colors, and placement have been verified with Project Manager.

B. Allow paving to age for thirty (30) days before starting pavement marking.

C. Sweep and clean surface to eliminate loose material and dust.

D. Apply paint with mechanical equipment to produce pavement markings, of dimensions indicated, with uniform, straight edges. Apply at manufacturer's recommended rates to provide a minimum wet film thickness of fifteen (15) mils.

   1. Broadcast glass beads uniformly into wet pavement markings at a rate of six (6) lb/gal.

3.10 PREFORMED TRAFFIC-CALMING DEVICES

A. Install preformed speed [**bumps**] [**humps**] [**cushions**] in bed of adhesive as recommended by manufacturer for heavy traffic.

PART 4 - MEASUREMENT AND PAYMENT

4.1 MEASURMENT

A. Measurement will be made by the contract unit specified for Asphalt Pavement.

4.2 PAYMENT

A. Payment will be made at the contract unit price, and shall include required materials, transportation, equipment, labor, excavation, sub-grade preparation, base course placement, asphalt compaction, testing, stockpiling, disposing, hauling off, watering, dust control, erosion and sediment control, as required in accordance with the Contract Drawings and Specifications.

END OF SECTION 32 12 16

SECTION 32 13 13 CONCRETE WALKS, CURBS, AND MISCELLANEOUS FLATWORK

PART 1 - GENERAL

1.1 RELATED DOCUMENTS

A. Contract Drawings and general provisions of the Contract, including General and Supplementary Conditions and Division 01 Specification Sections, apply to this Section.

1.2 SUMMARY

A. This Section includes requirements for furnishing, placing, shoring, bracing, and anchorage of formwork, concrete reinforcement, accessories, and placing concrete flatwork, including walks, curbs and gutters, ramps, and pans, including installation of control and expansion joints, concrete curing and concrete finishing.

B. Related Sections:
1. Division 01 Section “Layout of Work and Surveys”.
2. Division 01 Section “Submittals”.
3. Division 01 Section “Contractor Quality Control”.
4. Division 01 Section “Erosion and Sedimentation Control”.
5. Division 03 Section “Cast-In-Place Concrete”.
6. Division 31 Section “Earth Moving”.
7. Division 32 Section “Aggregate Base Course”.

1.3 REFERENCES

A. Project Geotechnical Report **,** Rocksol Consulting Group, May 5, 2016.

B. Note: All references below shall be from the most current edition.

C. American Concrete Institute (ACI):
1. ACI 117 - Standard Tolerances for Concrete Construction and Materials.
2. ACI 301 - Specifications of Structural Concrete for Buildings.
3. ACI 304 - Recommended Practice for Measuring, Mixing, Transporting and Placing Concrete.
4. ACI 305 and 306 - Hot and Cold Weather Protection for Concrete.
5. ACI 315 - Details and Detailing of Concrete Reinforcement.
6. ACI 318 - Building Code Requirements for Reinforced Concrete.
7. ACI 347 - Recommended Practice for Concrete Formwork.

D. American Society for Testing and Materials (ASTM):
1. ASTM A615 - Deformed and Plain Billet-Steel for Concrete Reinforcement.
2. ASTM C33 - Concrete Aggregates.
3. ASTM C94 - Ready-Mixed Concrete.
4. ASTM C150 - Portland Cement.
5. ASTM C260 - Air Entraining Admixtures for Concrete.
6. ASTM C309 - Liquid Membrane-Forming Compounds for Curing Concrete.
7. ASTM C494 - Water Reducing Admixtures for Concrete.

8. ASTM C618 - Fly Ash Mineral Admixture for Concrete.
9. ASTM C672 - Scaling Resistance of Concrete Surfaces Exposed to Deicing Chemicals.
10. ASTM-C800 - Curing Compound, Concrete, for New and Existing Surfaces.

E. CRSI - Manual of Standard Practice.

F. Colorado Department of Transportation (CDOT) – Standard Specifications for Road and Bridge Construction, latest edition

G. NRMCA: National Ready Mixed Concrete Association

1.4 DEFINITIONS

A. Cementitious Materials: Portland cement alone or in combination with one or more of blended hydraulic cement, fly ash and other pozzolans, and ground granulated blast-furnace slag.

B. Definitions: Refer to ACI 301 11.7 for definition of slab surface finishes.

1.5 QUALITY CONTROL

A. Reference Standards: Comply with following standards except where more stringent requirements are shown or specified:
1. American Concrete Institute (ACI) Publications: Comply with the following unless modified by requirements in the Contract Drawings. Note: All references below shall be from the most current edition.
a. ACI 117 - Standard Tolerances for Concrete Construction and Materials.
b. ACI 301 - Specifications of Structural Concrete for Buildings.
c. ACI 304 - Recommended Practice for Measuring, Mixing, Transporting and Placing Concrete.
d. ACI 305 and 306 - Hot and Cold Weather Protection for Concrete.
e. ACI 315 - Details and Detailing of Concrete Reinforcement.
f. ACI 318 - Building Code Requirements for Reinforced Concrete.
g. ACI 347 - Recommended Practice for Concrete Formwork.
h. ANSI/ASTM A82 - Cold Drawn Steel Wire for Concrete Reinforcement.
i. ANSI/ASTM A185 - Welded Steel Wire Fabric for Concrete Reinforcement.
j. ACI 301, "Specifications for Structural Concrete," Sections 1 through 5.
k. ACI 117, "Specifications for Tolerances for Concrete Construction and Materials."
l. ASTM A615 - Deformed and Plain Billet-Steel for Concrete Reinforcement.
m. ASTM C33 - Concrete Aggregates.
n. ASTM C94 - Ready-Mixed Concrete.
o. ASTM C150 - Portland Cement.
p. ASTM C260 - Air Entraining Admixtures for Concrete.
q. ASTM C309 - Liquid Membrane-Forming Compounds for Curing Concrete.
r. ASTM C494 - Water Reducing Admixtures for Concrete.
s. ASTM C618 - Fly Ash Mineral Admixture for Concrete.
t. ASTM C672 - Scaling Resistance of Concrete Surfaces Exposed to Deicing Chemicals.

2. ASTM-C800 - Curing Compound, Concrete, for New and Existing Surfaces.
3. Concrete Reinforcing Steel Institute (CRSI) - Manual of Standard Practice.

B. Pre-Construction Conference: Conduct conference at location approved by Project Manager.
   1. Before submitting design mixtures, review concrete design mixture and examine procedures for ensuring quality of concrete materials. Require representatives of each entity directly concerned with cast-in-place concrete to attend, including the following:
      a. Contractor's superintendent.
      b. Independent testing agency responsible for concrete design mixtures.
      c. Ready-mix concrete manufacturer.
      d. Concrete subcontractor.
      e. Special concrete finish subcontractor.
   2. Review special inspection and testing and inspecting agency procedures for field quality control, concrete finishes and finishing, cold- and hot-weather concreting procedures, curing procedures, construction contraction and isolation joints, and joint-filler strips, semi-rigid joint fillers, forms and form removal limitations, shoring and reshoring procedures, vapor-retarder installation, anchor rod and anchorage device installation tolerances, steel reinforcement installation, concrete repair procedures, and concrete protection.

C. Testing: Refer to Part 3 QUALITY CONTROL for Contractor’s testing requirements.

1.6 SUBMITTALS

A. See Division 01 Section “Submittals” for submittal requirements.

B. Product Data: For each type of product indicated.

C. Material Certificates: For the following, from manufacturer:
   1. Cementitious materials.
   2. Steel reinforcement and reinforcement accessories.
   3. Fiber reinforcement.
   4. Admixtures.
   5. Curing compounds.
   6. Applied finish materials.
   7. Bonding agent or epoxy adhesive.
   8. Joint fillers.

D. Field quality control reports.

E. Qualification Data: For qualified ready-mix concrete manufacturer and testing agency.

F. Mix Designs:
   1. Submit substantiating data for each concrete mix design specified for use to the Project Manager not less than four (4) weeks prior to first concrete placement. Data for each mix shall, as a minimum, include the following per section 2.7.B:
      a. Mix identification designation (unique for each mix submitted).
      b. Statement of intended use for mix.
      c. Mix proportions.
      d. Aggregates.
      e. Admixtures (must be approved by the Project Manager)
      f. Wet and dry unit weight.
      g. Entrained air content.
      h. Design slump.

i. Strength qualification data.

G. MOCK UPS:
1. New Concrete:
a. Minimum 10’ x 10’ mock ups, one for each type of finish, shall be provided and approved prior to placing flatwork.
b. Mockups may not be used as part of the finished work and shall remain on site for comparison until permanent flatwork is approved.
c. Mockups should demonstrate control joints in each finish type.
d. For tined finish, Contractor should anticipate demonstrating multiple tine spacing in the 10’ x 10’ mockup for final selection and approval.
2. Texturized Existing Concrete:
a. Minimum 5’ x 5’ mock up shall be provided and approved prior to placing flatwork.
b. Mockup shall be placed on a portion of the concrete floor that will eventually be removed.

1.7 DELIVERY, STORAGE AND HANDLING

A. General: Materials handling and batching shall conform to applicable provisions of ASTM C94.

B. Reinforcing: Unload and store reinforcing bars so they are kept free of mud and damage.

C. Hauling Time for Concrete: Deliver and discharge all concrete transmitted in a truck mixer, agitator, or other transportation device not later than one and one-half (1-1/2) hours from batch time, or three hundred (300) revolutions of the drum after the initial mixing water has been added, whichever is earliest.

D. Extra Water:
1. Deliver concrete to site in exact quantities required by design mix.
2. Should extra water be required for workability before depositing concrete, and the water/cement ratio of accepted mix design will not be exceeded, the General Contractor’s superintendent shall have the sole authority to authorize addition of water. Additional water shall not exceed one (1) gallon/cu. yd. Any additional water added to mix after leaving batch plant shall be indicated on truck ticket and signed by person responsible.
3. Where extra water is added to concrete it shall be mixed thoroughly for thirty (30) revolutions of drum before depositing.
4. Water may be added at the site only once for each batch.
5. A full set of tests shall be performed after addition of water. Excessive slump or other out of range tests will be cause for rejection.

1.8 PROJECT CONDITIONS

A. Environmental Requirements:
1. Cold Weather Placement:
a. When for three successive days prior to concrete placement the average daily outdoor temperature drops below forty degrees (40°) F or when the average outdoor temperature is expected to drop below forty degrees (40°) F on the day of concrete placement, preparation, protection and curing of concrete shall comply

with ACI 306R. Concrete temperature shall be maintained above fifty degrees (50°) F using concrete blankets or heating.

b. Minimum temperature of concrete upon delivery shall conform to ACI 301 Table 7.6.1.1. Concrete at time of placement shall conform to minimum values of ACI 306R Table 1.4.1, and shall not be below minimum temperature of fifty degrees (50°) F.

c. Subject to acceptance of the Project Manager an accelerating admixture may be used. Admixtures shall meet requirements of Part 2. Calcium Chloride and other chloride-type accelerating admixtures are not allowed.

d. Comply with concrete protection temperature requirements of ACI 306R. Record concrete temperatures during specified protection period at intervals not to exceed sixteen (16) hours and no less than twice during any twenty-four (24) hour period.

2. Hot Weather Placement:

a. When depositing concrete in hot weather, follow recommendations of ACI 305R.

b. Temperature of concrete at time of placement shall not exceed eighty-five (85°) F.

c. When air temperatures on day of placement are expected to exceed ninety degrees (90°) F, mix ingredients shall be cooled before mixing. Flake ice or well-crushed ice of a size that will melt completely during mixing may be substituted for all or part of mix water.

d. Retarding admixture may be used subject to acceptance of the Project Manager. Admixtures shall meet requirements of Part 2.

e. Protect to prevent rapid drying. Start finishing and curing as soon as possible.

B. Protection: Protect newly finished slabs from vandalism and all weather related damage. Protect finished slabs from mortar leakage from pouring of concrete above. Cover masonry walls, glazing, and other finish materials with polyethylene or otherwise protect from damage due to pouring of concrete.

C. Traffic Control: Maintain access for vehicular and pedestrian traffic as required for other construction activities.

D. Pavement-Marking Paint: Proceed with pavement marking only on clean, dry surfaces and at a minimum ambient or surface temperature of forty degrees (40°) F for oil-based materials, fifty five degrees (55°) F for water-based materials, and not exceeding ninety-five degrees (95°) F.

1.9 RIGHT OF WAY WORK

A. Contractor shall obtain all necessary permits when working with in the Right of Way.

B. Contractor shall preserve and protect all permanent land survey control markers. Per the General Contract Conditions Article 319 “Preservation of Permanent land Survey Control Markers”.

PART 2 - PRODUCTS

2.1 SUBGRADE MATERIAL

B. Dense, readily compactible material, free from organic matter, clay, and loose rock in excess of one and one half-inches (1-1/2”). Material excavated from on-site that meets this requirement

may be used if approved by Project Manager. Material properties to be in conformance with project Geotechnical Report.

2.2 FORM MATERIALS

A. Hand Placed Steel Forms: Hand placed steel forms are only to be used for sections that are straight and have no bend, radii or curvature in the sections to be used.

B. Plywood Forms: Are to be used on any section of concrete that have bends, radii or curvature. Forms shall be made of Douglas Fir or Spruce species; solid one side grade; sound, undamaged sheets with straight edges. Staking shall be adequate to hold wet concrete while maintaining the desired radii.

C. Lumber: Douglas Fir or Spruce species; construction grade; with grade stamp clearly visible.

D. Form Coatings: Provide commercial formulation form coating compounds that will not bond with, stain, or adversely affect concrete surfaces and will not impair subsequent treatments of concrete surfaces.

2.3 CONCRETE MATERIALS

A. Provide materials in accordance with ACI 301, unless amended or superseded by requirements of this section or general notes on structural drawings.
   1. General: Ready-mixed Concrete: ASTM C94. On-site mixed concrete not allowed.
   2. Cement: ASTM C150. Type II minimum of five hundred sixty four (564) pounds per cubic yard.
   3. Fly Ash: ASTM C618 Class C or F. Fly ash shall not exceed fifteen percent (15%) of total cementitious material by weight.
   4. Aggregate: ASTM C33.
      a. Obtain from same source throughout project.
      b. All sand and aggregates to meet C-33 Table 3 for Class 4S “Severe Weathering Region”.
         1) Fine Aggregate: Clean, natural sand.
         2) Coarse Aggregate: Clean gravel or crushed stone.
   5. Water: ASTM C 94/C 94M, Clean and not detrimental to concrete.

2.4 STEEL REINFORCEMENT

A. Recycled Content: Provide steel reinforcement with an average recycled content of steel so postconsumer recycled content plus one-half of preconsumer recycled content is not less than twenty five percent (25%).

B. Reinforcing Bars: ASTM A 615/A 615M, Grade 60; deformed.

C. Epoxy-Coated Reinforcing Bars: ASTM A 775/A 775M or ASTM A 934/A 934M; with ASTM A 615/A 615M, Grade 60 (Grade 420) deformed bars.

D. Joint Dowel Bars: ASTM A 615/A 615M, Grade 60 (Grade 420) plain-steel bars. Cut bars true to length with ends square and free of burrs.

E. Epoxy-Coated, Joint Dowel Bars: ASTM A 775/A 775M; with ASTM A 615/A 615M, Grade 60 (Grade 420), plain-steel bars.

F. Tie Bars: ASTM A 615/A 615M, Grade 60 (Grade 420), deformed.

G. Hook Bolts: ASTM A 307, Grade A (ASTM F 568M, Property Class 4.6), internally and externally threaded. Design hook-bolt joint assembly to hold coupling against paving form and in position during concreting operations, and to permit removal without damage to concrete or hook bolt.

H. Bar Supports: Bolsters, chairs, spacers, and other devices for spacing, supporting, and fastening reinforcing bars, and dowels in place. Manufacture bar supports according to CRSI's "Manual of Standard Practice" from steel wire, plastic, or precast concrete of greater compressive strength than concrete specified, and as follows:
1. Equip wire bar supports with sand plates or horizontal runners where base material will not support chair legs.
2. For epoxy-coated reinforcement, use epoxy-coated or other dielectric-polymer-coated wire bar supports.

I. Epoxy Repair Coating: Liquid, two-part, epoxy repair coating, compatible with epoxy coating on reinforcement.

2.5 SLIP “SPEED” DOWELS

A. Slip Joints:
1. Speed Dowel Model PSD09/#4TX, 9” long sleeve to accommodate 18” smooth steel round bar. Manufactured by Sika/Greenstreak, (800)325-9504, or equal.
2. Dowel, 18” long smooth round steel bar, 5/8” diameter. De-bur cut ends.

2.6 ADMIXTURES

A. General: Unless specified, no admixtures may be used without specific approval of the Project Manager.

B. Prohibited Products: Calcium chloride or admixtures containing more than 0.05% chloride ions or thiocyanates are not permitted.

C. Air-Entraining Admixture: ASTM C260. Subject to compliance with requirements, provide one of the following:
1. “Air Mix” by Euclid Chemical Co.
2. “Darex ARA” by W. R. Grace.
3. “Micro-Air” by Master Builders.
4. Or equal.

D. Water Reducing Admixture: ASTM C494, Type A. Subject to compliance with requirements, provide one of the following:
1. “Eucon WR-75” by Euclid Chemical Co.
2. “Rheobuild 1000” by Master Builders.
3. “Plastocrete 106” by Sika Chemical Co.
4. Or equal.

E. High Range Water Reducing Admixture (Superplasticizer): ASTM C494, Type F or G. Subject to compliance with requirements, provide one of the following:
1. "Eucon 37" by Euclid Chemical Co.
2. "Pozzolith 400N" by Master Builders.
3. "Sikament" by Sika Chemical Co.
4. Or equal.

F. Warm weather admixtures: ASTM C494. Use of admixtures will not relax warm weather placement requirements.

G. Cold Weather Admixtures: ASTM C494. Use of admixtures will not relax cold weather placement requirements.

2.7 CONCRETE MIX

A. Refer to the Denver Right of Way Services approved materials list of pre-approved concrete mixes at the following website:

https://www.denvergov.org/content/denvergov/en/right-of-way-services/engineering-regulatory-analytics/engineering-plan-review/manuals-regulations.html

B. All Concrete mixes from the approved list or submitted for approval shall meet the following criteria.
1. All concrete for flatwork shall be Class P four-thousand two-hundred (4,200) PSI unless otherwise requested by the Project Manager.
2. Mix concrete in accordance with ASTM C94 and ACI 301 Chapter 3.
3. Cement Content: Type II cement, minimum of five hundred sixty-four pounds (564#) per cubic yard.
4. Maximum water-cement ratio: 0.44.
5. Slump: Four inches (4") maximum when hand placed.
6. Air Entrainment: five percent (5%) to eight percent (8%).
7. Aggregate Size: three quarter-inch (3/4") maximum.
8. Deliver concrete and discharge all concrete transmitted in a truck mixer, agitator, or other transportation device not later than one and one-half (1-1/2) hours from batch time, or three hundred (300) revolutions of the drum after the initial mixing water has been added, whichever is earliest.
9. During cold weather below forty-five degrees (45°) F, use heated water and aggregates if necessary to maintain concrete temperature between sixty degrees (60°) F. and ninety degrees (90°) F.
10. Concrete for Footings, Walls, and Interior Slabs-on-Grade shall be Class B, as approved by the Project Manager.
11. Concrete for Exterior Flatwork, including Pavement, Curb and Gutter, and Drainage Pans shall be Class P, as approved by the Project Manager.
12. Fly Ash: Per CDOT Standard Specifications for Road and Bridge Construction Section 701.02.

2.8 FIBROUS CONCRETE REINFORCEMENT

A. Shall be one hundred percent (100%) virgin polypropylene, fibrillated fibers containing no reprocessed olefin materials and specifically manufactured to an optimum gradation utilizing twenty-five (25) individual fiber designs for use as concrete secondary reinforcement. Volume

per cubic yard shall be one and one-half (1.5) pounds, or in accordance with manufacturer's recommendations. Fiber manufacturer must document evidence of five (5) year satisfactory performance history, compliance with applicable building codes and ASTM C1116 Type III 4.1.3 and ASTM C1116 Performance Level I.

1. Fibrous concrete reinforcement shall be utilized in all flatwork applications.

2.9 EXPANSION JOINT MATERIAL

A. Interior Use or Exterior Use where sealants are specified: Bituminous saturated fiber conforming to ASTM D1751, one half-inch (1/2") thick. Provide manufacturer's certification of compatibility with specified sealants where required.

B. Pre-molded closed cell polyethylene foam: Backer rod if required, equal to "Sonoflex F" by BASF, Provide half-inch (1/2") thick by depth of the slab material, allow half-inch (1/2") thickness for joint sealer.

C. Joint Sealant: Sonolastic Sealant as manufactured by BASF or a silicone material that is on CDOT's approved silicone sealant list. Where color additive is used, color to match.

2.10 CONTROL JOINTS

A. Shall be in conformance with current Denver Department of Public Works Traffic Engineering Standards and Details and as shown on Contract Drawings

https://www.denvergov.org/Portals/730/documents/PW%20TRANS%20STDS%20&%20DETAILS%20-%20FINAL%20MAY%202015.pdf

2.11 CURING MATERIALS

A. Absorptive Cover: AASHTO M 182, Class 3, burlap cloth made from jute or kenaf, weighing approximately nine (9) oz./sq. yd. dry.

B. Moisture-Retaining Cover: ASTM C 171, polyethylene film or white burlap-polyethylene sheet.

C. Water: Potable.

D. Evaporation Retarder: Waterborne, monomolecular, film forming, manufactured for application to fresh concrete.

1. Products: Subject to compliance with requirements, [**provide the following**]
   a. BASF Construction Chemicals, LLC; Confilm.
   b. Or approved equal.

E. White, Waterborne, Membrane-Forming Curing Compound: ASTM C 309, Type two (2), Class B, dissipating.

1. Products: Subject to compliance with requirements, [**provide the following**]:
   a. Dayton Superior Corporation; Day-Chem White Pigmented Cure (J-10-W).
   b. Or approved equal.

2.12 RELATED MATERIALS

A. CONCRETE SURFACE RETARDER: For sand finish use ‘Grace’ Topcast 05 or approved equal

2.13 TRUNCATED DOME INSERTS FOR RAMPS

A. Shall be in conformance with current Denver Department of Public Works standards.

2.14 TEXTURIZED EXISTING CONCRETE

A. Contractor is responsible to remove and dispose of cuttings produced.

B. EQUIPMENT
   1. Provide equipment capable of:\
      a. Maintaining accurate depth of cut and slope.
      b. Controlling dust created by the cutting action.
      c. Provide chipping tools to remove concrete in small areas not accessible to the machine.

PART 3 - EXECUTION

3.1 QUALITY CONTROL

A. Requirements of Regulatory Agencies: Comply with all applicable provisions of the state and local building and safety codes.

B. Source Limitations: Obtain each type or class of cementitious material of the same brand from the same manufacturer's plant, obtain aggregate from single source, and obtain admixtures from single source from single manufacturer, unless otherwise approved by Project Manager.

C. Ready-Mix-Concrete Manufacturer Qualifications: A firm experienced in manufacturing ready-mixed concrete products and that complies with ASTM C 94/C 94M requirements for production facilities and equipment.
   1. Manufacturer certified according to NRMCA's "Certification of Ready Mixed Concrete Production Facilities" (Quality Control Manual - Section 3, "Plant Certification Checklist").

D. Testing: All testing shall be completed by the Contractor at their expense unless otherwise specified by the contract.

E. Testing Agency Qualifications: Engage a qualified testing agency to perform material evaluation tests and to design concrete mixtures. Qualified according to ASTM C 1077 and ASTM E 329 for testing indicated.
   1. Personnel conducting field tests shall be qualified as ACI Concrete Field Testing Technician, Grade 1, according to ACI CP-1 or an equivalent certification program.

F. Testing Frequency: Obtain at least one composite sample for each one hundred (100) cubic yards, or fraction thereof of each concrete mixture placed each day.

a. When frequency of testing will provide fewer than five (5) compressive-strength tests for each concrete mixture, testing shall be conducted from at least five (5) randomly selected batches or from each batch if fewer than five (5) are used.

2. Slump: ASTM C 143/C 143M; one test at point of placement for each composite sample, but not less than one (1) test for each day's pour of each concrete mixture. Perform additional tests when concrete consistency appears to change.
3. Air Content: ASTM C 231, pressure method; one test for each composite sample, but not less than one test for each day's pour of each concrete mixture.
4. Compression Test Specimens: ASTM C 31/C 31M; cast and laboratory cure one (1) set of four (4) standard cylinder specimens for each composite sample.
5. Compressive-Strength Tests: ASTM C 39/C 39M; test one specimen at seven days and two specimens at twenty-eight (28) days and keep one for backup in the event a sample should break.
    a. A compressive-strength test shall be the average compressive strength from two specimens obtained from same composite sample and tested at twenty-eight (28) days.

G. Strength of each concrete mixture will be satisfactory if average of any three consecutive compressive-strength tests equals or exceeds specified compressive strength and no compressive-strength test value falls below specified compressive strength by more than two-hundred (200) psi.

H. Test results shall be reported in writing to Project Manager, concrete manufacturer, and Contractor within forty eight (48) hours of testing. Reports of compressive-strength tests shall contain Project identification name and number, date of concrete placement, name of concrete testing and inspecting agency, location of concrete batch in Work, design compressive strength at twenty eight (28) days, concrete mixture proportions and materials, compressive breaking strength, and type of break for both seven (7) and twenty eight (28) day tests.

I. Additional Tests: Testing and inspecting agency shall make additional tests of concrete when test results indicate that slump, air entrainment, compressive strengths, or other requirements have not been met, as directed by Project Manager.

J. Concrete work will be considered defective if it does not pass tests and inspections.

K. Additional testing and inspecting, at Contractor's expense, will be performed to determine compliance of replaced or additional work with specified requirements.

L. Prepare test and inspection reports.

M. Record of Work: A record shall be kept by the Contractor listing the time and date of placement of all concrete for the structure. Such record shall be kept until the completion of the project and shall be available to the Project Manager for examination at any time.

N. Mockups: If requested by the Project Manager, prior to starting any concrete work, provide a sample panel using materials indicated for project work. For each type, color and finish of concrete specified, build panel at the site of full thickness and approximately ten feet (10’) by 10 feet (10’), including expansion joints, control joint, scales, fillers, and one radial edge. Provide the workmanship proposed for the work. Correct and replace sample panel until Project Manager’s acceptance of the work. Retain panel(s) during construction as a standard for completed paving work.

1. Build panel approximately one-hundred (100) sq. ft. in the location indicated or, if not indicated, as directed by Project Manager.
2. Approved mockups may become part of the completed Work if approved prior to the construction of the mock up and is undisturbed at time of Substantial Completion.
3. Notify the Project Manager a minimum of seven (7) days in advance of dates and times when mockups will be constructed.
4. Obtain the Project Manager's written approval of the mockups before starting construction.
5. If the Project Manager determines that the mockup does not meet the requirements, demolish and remove from the site and cast another until the mockup is approved.
6. Maintain the mockups during construction in an undisturbed condition as a standard for judging the completed Work.
7. Demolish and remove mockups when directed by Project Manager.

O. Review special inspection and testing and inspecting agency procedures for field quality control, concrete finishes and finishing, cold and hot-weather concreting procedures, curing procedures, construction contraction and isolation joints, and joint-filler strips, semi-rigid joint fillers, forms and form removal limitations, shoring and reshoring procedures, vapor-retarder installation, anchor rod and anchorage device installation tolerances, steel reinforcement installation, concrete repair procedures, and concrete protection.

3.2 PREPARATION OF SUBGRADE

A. Excavate to required depth in accordance with geotechnical report. Remove soft, yielding material and replace with select fill. Compact to minimum ninety-five percent (95%) Standard Proctor within two percent (2%) of optimum moisture.

B. Refer to Division 31 Section: Earth Moving for requirements for subgrade testing and proof-rolling.

3.3 MAINTENANCE OF SUBGRADE

A. Maintain subgrade in a compacted condition until concrete is placed.

3.4 FORMS

A. Metal, plastic or uniform warp free lumber, coated with form release agent. Slope forms to give slabs positive drainage and stake securely. Obtain approval of Project Manager for alignment and grade of forms a minimum of forty-eight (48) hours prior to placing concrete. Any concrete work installed without obtaining approval from the Project Manager shall be subject to removal and replacement at the discretion of the Project Manager, at no cost to the City.

B. Radii shall be continuous and flowing to avoid angular intersections in the horizontal alignment, radial forming shall use bender board or approved equal as directed by Project Manager.

3.5 STEEL REINFORCEMENT

A. Install steel reinforcement only in locations shown on Contract Drawings.

B. General: Comply with CRSI's "Manual of Standard Practice" for fabricating, placing, and supporting reinforcement.

C. Clean reinforcement of loose rust and mill scale, earth, ice, or other bond-reducing materials.

D. Arrange, space, and securely tie bars and bar supports to hold reinforcement in position during concrete placement. Maintain minimum cover to reinforcement.

3.6 CONCRETE PLACEMENT

A. Prior to placing any new sections of asphalt or concrete pavement, the entire subgrade shall be scarified to a depth of 6-inches. In areas where existing pavement is to be removed and replaced the existing compacted subgrade may be reused if the subgrade meets specified compaction. In areas of existing subgrade that do not meet the specified compaction, materials shall be removed, replaced and compacted to meet the specified proctor density. Adjust moisture content and compact as hereinafter specified.

B. Before placing concrete, inspect and complete formwork installation, steel reinforcement (if present), and items to be embedded or cast-in.

C. Do not place concrete on frozen surfaces.

D. Moisten subbase to provide a uniform dampened condition at time concrete is placed. Do not place concrete around manholes or other structures until they are at required finish elevation and alignment.

E. Comply with ACI 301 requirements for measuring, mixing, transporting, and placing concrete.

F. Do not add water to concrete during delivery.

G. Deposit and spread concrete in a continuous operation between transverse joints. Do not use vibratory equipment to move concrete into place.

H. Consolidate concrete according to ACI 301 by mechanical vibrating equipment supplemented by hand spading, rodding, or tamping.
   1. Consolidate concrete along face of forms and adjacent to transverse joints with an internal vibrator. Keep vibrator away from joint assemblies**,** reinforcement, or side forms. Use only square-faced shovels for hand spreading and consolidation. Consolidate with care to prevent dislocating reinforcement, dowels, and joint devices.

I. Screed paving surface with a straightedge and strike off.

J. Commence initial floating using bull floats or darbies to impart an open-textured and uniform surface plane before excess moisture or bleed water appears on the surface. Do not further disturb concrete surfaces before beginning finishing operations or spreading surface treatments.

K. Curbs and Gutters: Use design mixture for automatic machine placement. Produce curbs and gutters to required cross section, lines, grades, finish, and jointing.

L. Slip-Form Paving: Use design mixture for automatic machine placement. Produce paving to required thickness, lines, grades, finish, and jointing.
   1. Compact subbase and prepare subgrade of sufficient width to prevent displacement of slip-form paving machine during operations.

M. Cold-Weather Placement: Protect concrete work from physical damage or reduced strength that could be caused by frost, freezing, or low temperatures. Comply with ACI 306.1 and the following:
   1. When air temperature has fallen to or is expected to fall below forty degrees (40°) F, uniformly heat water and aggregates before mixing to obtain a concrete mixture temperature of not less than fifty degrees (50°) F and not more than eighty degrees (80°) F at point of placement.
   2. If subgrade is frozen, as determined by Geotechnical Engineer and/or Project Manager, thaw subgrade to depth of eight (8”) prior to placing concrete.
   3. Do not use frozen materials or materials containing ice or snow.
   4. Do not use calcium chloride, salt, or other materials containing antifreeze agents or chemical accelerators unless otherwise specified and approved in design mixtures.

N. Hot-Weather Placement: Comply with ACI 301 and as follows when hot-weather conditions exist:
   1. Cool ingredients before mixing to maintain concrete temperature below ninety degrees (90°) F at time of placement. Chilled mixing water or chopped ice may be used to control temperature, provided water equivalent of ice is calculated in total amount of mixing water. Using liquid nitrogen to cool concrete is Contractor's option.
   2. Cover steel reinforcement with water-soaked burlap so steel temperature will not exceed ambient air temperature immediately before embedding in concrete.
   3. Fog-spray forms, steel reinforcement, and subgrade just before placing concrete. Keep subgrade moisture uniform without standing water, soft spots, or dry areas.

3.7 CONCRETE FINISHING

A. Allow time for bleed water to appear, then scrape or push off all bleed water. Do not work water into surface.

B. Final level, light bull float, but do not trowel surface.

C. After darbying or bullfloating, stop finishing until bleeding has ceased and until concrete can support foot pressure with only about one eighth-inch (1/8”) indentation. During or after the first floating, check planeness of surface with a ten foot (10’) straightedge applied at not less than two different angles, and then cut down all high spots and fill all low spots to achieve a true plane within one eighth-inch (1/8”) in ten feet (10’).

D. Finishes:
   1. Medium Broom Finish: Provide a medium broom finish for exterior concrete as shown on the Plans. Immediately after float finishing and tool work, roughen surface with fiber-bristle broom to match the approved mockup panel. Confirm direction and pattern of broom finish with the Project Manager prior to commencing slab placement.

   2. Tined Finish: Provide a tined finish for exterior concrete as shown on the Plans. Immediately after float finishing and tool work, rake the surface with a tined broom to match the approved mockup panel. Confirm rake direction and tine spacing with the Project Manager prior to commencing slab placement.

   3. Sand Finish:
      a. After darbying or bullfloating, apply surface retarder uniformly over surface per the manufacturer’s recommendations for application.

b. Expose aggregate by power washing per the manufacturer's recommendations for application.
c. Clean surface.
d. Apply sealer.
e. Avoid traffic on the concrete during this operation. High pressure water may be used if desired finish is more easily achieved without harm to the concrete. Use same method of exposure, throughout the project.

E. Edging: After initial floating, tool edges of paving, gutters, curbs, and joints in concrete with an edging tool to a three eighths-inch (3/8") radius. Final concrete finish to completed following jointing. Surface/edging tool marks are not acceptable.

F. Accessible Ramps:
1. Provide score joints in handicap ramps, tooled in a pattern in accordance with standard Denver Public Works standards.
2. Install truncated dome inserts flush with the adjacent ramp surface in accordance with standard Denver Public Works standards, taking care to achieve a tight bond with the concrete, free of air pockets.
3. Detectable Warning Installer Qualifications: An employer of workers trained and approved by manufacturer of stamped concrete paving systems.

G. Do not use evaporative retarders as finishing aid.

3.8 CONCRETE CURING, PROTECTION AND SURFACE TREATMENTS

A. Refer to the list of curing materials in PART 2 - MATERIALS. Apply curing materials as specified by the manufacturer.

B. General:
1. Protect freshly placed concrete from premature drying and excessive cold or hot temperatures. Maintain concrete with minimal moisture loss at a relatively constant temperature for the period necessary for hydration of the cement and hardening of concrete.
2. Curing shall commence as soon as free water has disappeared from the concrete surface after placing and finishing. The curing period shall be seven days for all concrete unless test cylinders, made and kept adjacent to the structure and cured by the same methods, are tested with the average compressive strength equal to seventy percent (70%) of the specified twenty-eight (28) day strength.
3. Curing shall be in accordance with ACI 301 procedures. Avoid rapid drying at the end of the curing period. During hot and cold weather, cure concrete in accordance with ACI 305R and ACI 306R.

C. Curing Methods: Perform curing of concrete by moisture curing, by moisture-retaining cover curing, by curing compound, and by combinations thereof, as herein specified. Coordinate with and choose a curing method that is compatible with the requirements for subsequent material usage on the concrete surface.
1. Provide moisture curing by one of the following methods:
a. Keep concrete surface continuously wet by covering with water.
b. Continuous water-fog spray.
c. Covering concrete surface with specified absorptive cover, thoroughly saturating cover with water and keeping it continuously wet. Place absorptive cover to

provide coverage of concrete surfaces and edges, with 4-inch lap over adjacent absorptive covers.

2. Provide moisture retaining cover curing as follows: Cover concrete surfaces with a moisture-retaining cover for curing concrete, placed in widest practical width with sides and ends lapped at least 3-inches and sealed by waterproof tape or adhesive. Immediately repair any holes or tears during curing period using cover material and waterproof tape.
3. Provide curing and sealing compound to exterior slabs, walks, curbs, etcetera as follows:
   a. Apply specified curing and sealing compound to concrete slabs as soon as final finishing operations are complete (within thirty (30) minutes). Apply uniformly in continuous operation by power-spray or roller in accordance with manufacturer's directions. Recoat areas subjected to rainfall within three hours after initial application.
   b. Maintain continuity of coating and repair damage during period.

D. Curing Formed Surfaces: Where wooden forms are used, cure formed concrete surfaces by moist curing with forms in place for full curing period or until forms are removed. When forms are removed, continue curing by methods specified above for specified curing time.

3.9 JOINTS

A. Construct joints true to line with faces perpendicular to surface.

B. Expansion Joints: Expansion joint material shall be provided at the following locations and shall be in place prior to the placing of concrete:
1. As shown on the Contract Drawings; or
2. At each end of curb return.
3. Between sidewalk and driveway slabs or service walks.
4. Between new concrete and existing concrete.
5. Between new concrete and fixed vertical objects.
6. At maximum one hundred twenty foot (120') spacing.
7. As directed by Project Manager.
8. Thoroughly clean all surfaces prior to installation of sealant material.

C. Speed Dowels:
1. Attach bases to the face of concrete forms using a double-headed nail or self-tapping screw.
2. Center of base shall be centered on form.
3. Prior to pouring concrete, Speed Dowel sleeve shall be slipped over base.
4. Pour concrete minimum eighteen-inches (18") from Speed Dowel system and work concrete around the Speed Dowel System.
5. Concrete forms shall be removed with bases still attached. Bases may be reused.
6. Install slip dowels to the full depth of the embedded Speed Dowel sleeve and proceed with next concrete pour.
7. Greasing of dowels is not required. Embedded Speed Dowel Sleeve accommodates expansion and shrinkage movements that may occur.
8. Bent or badly sheared slip dowels shall not be used. Saw cut dowels recommended.
9. Concrete shall not be poured directly over the Speed Dowel System.
10. Place edge forms plumb. Out of plumb forms may result in misaligned dowels.

D. Contraction (Control) Joints in Walks: Contraction joints shall be formed with power saws equipped with shatterproof abrasive or diamond-rimmed blades. Cut one eighth-inch (1/8") wide joints into concrete that has hardened sufficiently that cutting action will not tear, abrade, or otherwise damage surface, but before development of random contraction cracks. Saw cut joints shall be spaced at a distance equal to the width of the walk, but not over ten feet (10') unless approved by the Project Manager. Depth of joints shall be one-fourth (1/4) the slab thickness.

1. Tooled joints will not be allowed on concrete trails, unless directed by the Project Manager.

E. Curb and Gutter Contraction (Control) Joints: Space curb and gutter joints not more than twelve foot six-inches (12'-6") on center, and align them with sidewalk joints. Contraction joints shall be tooled. Form plane of weakness by inserting and later removing a metal divider, finish with an edger or groover, or by saw cutting a previously tooled joint.

3.10 FORM REMOVAL

A. Remove forms after concrete surface is hard enough so as not to be damaged in any way. Reasonable care is to be used in removing forms. Repair minor defects with high strength grout as per Project Managers direction. Plastering will not be permitted on exposed faces.

3.11 REPAIRS AND PROTECTION

A. Remove and replace concrete paving that is broken, damaged, or defective or that does not comply with requirements in this Section. Remove work in complete sections from joint to joint unless otherwise approved by Project Manager.

B. Drill test cores, where directed by Project Manager, when necessary to determine magnitude of cracks or defective areas. Fill drilled core holes in satisfactory paving areas with portland cement concrete bonded to paving with epoxy adhesive.

C. Protect concrete paving from damage. Exclude traffic from paving for at least 14 days after placement. When construction traffic is permitted, maintain paving as clean as possible by removing surface stains and spillage of materials as they occur.

D. Maintain concrete paving free of stains, discoloration, dirt, and other foreign material. Sweep paving not more than two days before date scheduled for Substantial Completion inspections.

3.12 PAVING TOLERANCES

A. Comply with tolerances in ACI 117, the drawings, and as follows:

1. Elevation: In conformance with grading plans.
2. Thickness: Plus three eighths-inch (3/8"), minus one quarter-inch (1/4").
3. Surface: Gap below ten foot (10') long, unleveled straightedge not to exceed one eighty - inch (1/8").
4. Lateral Alignment and Spacing of Dowels: one-inch (1").
5. Vertical Alignment of Dowels: one quarter-inch (1/4").
6. Joint Spacing: three-inches (3").
7. Contraction Joint Depth: Plus one quarter-inch (1/4"), no minus.
8. Joint Width: Plus one eighth-inch (1/8"), no minus.

3.13 TEXTURIZED EXISTING CONCRETE

A. Texture the existing concrete slab to a uniform rough surface having a rough appearance of similar depth and texture to a typical medium broom finish.

B. Means and Methods of achieving a textured finish appropriate for an outdoor concrete slab are at the discretion of the Contractor. Acceptable methods could include scarifying, grinding, shot blasting, or bush-hammering.

C. Add texture at locations shown on the plans or as directed by the Landscape Architect.

D. Take appropriate care to prevent damage to the building faces, slab joints, drainage hardware, and other improvements.

E. Use chipping tools to remove concrete in small areas not accessible to machinery.

F. Immediately clean the surface of the slab to remove all cuttings and debris.

G. Dispose of all cuttings and debris.

H. Re-seal the texturized concrete to be weatherproof and suitable for the outdoor environment.

PART 4 - MEASUREMENT AND PAYMENT

4.1 MEASUREMENT

A. Measurement will be based on the contract unit specified for Concrete Walks, Curbs and Miscellaneous Flatwork.

4.2 PAYMENT

A. Payment will be made at the contract unit price, and shall include required materials, transportation, equipment, labor, excavation, stockpiling, disposing, hauling off, watering, dust control, erosion and sediment control, compaction, sub-grade preparation, formwork, placing of concrete, reinforcing, joints, curing, finishing and all other items required to complete the work as required in accordance with the Contract Drawings and Specifications.

END OF SECTION 32 13 13

SECTION 321400 CONCRETE UNIT PAVERS

PART 1 GENERAL

1.01 RELATED DOCUMENTS

A. The General Contract Conditions, Drawings, and Division - 1 Specification sections, apply to Work of this section.

1.01 DESCRIPTION

A. Provide all labor, materials and equipment necessary to furnish and install new concrete unit paver walks and plazas as indicated on the plans and specified herein.

1.02 RELATED SECTIONS

A. Section 321116 – Aggregate Base Course
B. Section 321313 – Concrete Walks, Curbs, and Miscellaneous Flatwork
C. Section 312000 – Earth Moving

1.03 REFERENCES

American Society of Testing and Materials (ASTM):

A. C 33, Specification for Concrete Aggregates.
B. C 136, Method for Sieve Analysis for Fine and Coarse Aggregate.
C. C 140, Sampling and Testing Concrete Masonry Units.
D. C 144, Standard Specification for Aggregate for Masonry Mortar.
E. C 936, Specification for Solid Interlocking Concrete Paving Units.
F. C 979, Specification for Pigments for Integrally Colored Concrete.
G. D 698, Test Methods for Moisture Density Relations of Soil and Soil Aggregate Mixtures Using a 5.5-lb (2.49 kg) Rammer and 12 in. (305 mm) drop.
H. D 1557, Test Methods for Moisture Density Relations of Soil and Soil Aggregate Mixtures Using a 10-lb (4.54 kg) Rammer and 18 in. (457 mm) drop.
I. D 2940, Graded Aggregate Material for Bases or Subbases for Highways or Airports.

1.04 DEFINITIONS

A. *Base Course*: Layer of open-graded, crushed and washed aggregate beneath the bedding course layer, comprised of small- to medium-particle-sized stone (typically 1/2” to 1”). Recommended depth of the sub-base layer shall be 2”-3”, but shall not exceed 4”.

B. *Bedding Course*: Layer of open-graded, crushed and washed aggregate directly beneath the unit pavers, comprised of small particle-sized stone chips (typically ¼” to 3/8” rock). Also commonly called the “setting bed.” Recommended depth of the bedding course layer shall be 1”- 2” not to exceed 2”.

C. *Bundle*: Several layers of paver clusters stacked vertically, banded, and tagged for shipment. Also commonly called a “cube.”

D. *Chamfer*: A 45-degree beveled edge around the top of a paver unit, usually 1/8" or less. It facilitates snow removal, helps prevent edge chipping, and delineates the paving's individual units.

E. *Cluster*: The group of pavers forming a single layer from a bundle of pavers or the group of pavers held by the clamp of a paver laying machine.

F. *Flats*: The portion of the side faces of a paver other than the spacer bars.

G. *Joint Filler*: washed angular chips 1/8"-1/4" or materials complying with ASTM #8, #89 or #9 crushed stone, could be granite or limestone.

H. *Laying Face*: The working edge of the pavement where the laying of pavers is occurring.

I. *Mechanical Installation*: The use of specialized machines to lift clusters of pavers from the bundles and place them on the prepared bedding course. These specialized machines are designed specifically for this application.

J. *Method Statement*: The paver installer's and manufacturer's plan for construction and quality control of the pavers. Contractor must have installed a job of equal size with mechanical installer to qualify for project.

K. *Spacer Bars*: Small protrusions on each side of pavers which are used to keep them uniformly spaced while minimizing chipping and spalling. Mechanically installed pavers must have spacer bars.

L. *Sub-base Course*: Layer of open-graded crushed aggregate beneath the base course layer, comprised of large particle-sized stone (typically 2-1/2" to 3" fractured rock). Depth shall vary depending upon site conditions and specific requirements. Minimum depth of the sub-base course shall be twelve inches (12").

M. *Sub-grade* – native soils at an excavated depth where underdrain will be placed, if required, or aggregate layers will be placed on this surface.

N. *Void Filler*: Open-graded aggregate used to fill the openings in the paver units. The bedding course aggregate may be used as the void filler. Smaller particle-sized crushed stone chips (1/8" to ¼"), joint filler, are preferable, if available.

O. *Wearing Course*: The top surface of the paver surrounded by a chamfer.

1.05 SUBMITTALS

A. Submit copies of product drawings and data in accordance with General Conditions. Data shall include the dimensions of the manufacturer's proposed mold assembly, including pattern, dimensions of all cavities, including radii, spacer bars, and the top portion of the mold known as the head or shoe.

B. Submit full size sample sets of concrete paving units to indicate color and shape selections. Color will be selected by Landscape Architect/Project Manager from manufacturer's available colors.

C. Materials Samples of pavers, void filler and joint filler aggregate, bedding course aggregate, base and sub-base course aggregate, including a current sieve analysis of each showing conformance to the specifications.

D. Submit test results from an independent testing laboratory for compliance of paving unit requirements to ASTM C 936.

E. Indicate layout, pattern, and relationship of paving joints to fixtures and project formed details.

F. Substitutions: Substitutions shall be submitted 10 days prior to bid opening for acceptance.

G. The Quality Control Plan

H. The Method Statement

1.06 QUALITY ASSURANCE

A. Manufacturer: Company specializing in the manufacture of concrete interlocking pavers for a minimum of three (3) years.

B. Installation shall be by a contractor and crew with at least three (3) years of experience in placing interlocking concrete pavers on projects of similar nature or dollar cost.

C. Installation Contractor shall conform to all local, state/provincial licensing and bonding requirements.

D. Quality Control Plan: The installer and manufacturer shall establish, provide and maintain a quality control plan. The quality control plan shall provide reasonable assurance that the materials and completed construction submitted for acceptance will conform to the contract requirements. Although guidelines are established and certain requirements are specified, they are minimal, and the installer and manufacturer shall assume full responsibility for meeting all requirements.

The installer and manufacturer shall agree upon a method for measuring the clusters at the factory and in the field. That method shall be submitted in writing to the owner for approval.

The Quality Control Plan shall contain at a minimum, but not limited to, the following elements:

1. The manufacturer's quality control procedures.

2. The manufacturer's production records showing at a minimum the date of manufacture, a mix design designation, mold number, mold cycles, and sequential pallet numbers. Copies of such records shall be made available to the owner upon request.

3. A description of the anticipated growth in the cluster size and a plan for managing the growth so as to not interfere with placement by paving machine(s), if mechanically installed.

4. The installer's quality control procedures, including but not limited to, dimensional control methods, paving machine(s) head adjustment, typical daily work schedule to insure that all pavers placed on the bedding course on any given day are adjusted as required, cut and vibrated, and installation of void filler completed at the end of that work day.

5. Provision for identifying and recording actual daily production and the bundle numbers of pavers used in each day's installation.

E. Method Statement: The installer and manufacturer shall prepare a Method Statement describing the overall plan to complete the work. This plan shall include at a minimum:

1. The quality control plan.

2. A description of the anticipated mold life, rate and effect of mold wear on pavers produced, individual mold runs, and a mold rotation plan.

3. Clear diagrams showing the proposed starting point of the installation, the proposed direction of installation, progress on a week-by-week basis, and the dimensional controls to be used to maintain specified joint width and straight joint lines.

4. A method of measuring the clusters at the factory and in the field.

5. A description of the anticipated growth in cluster size due to mold wear and a plan for dealing with that growth or other dimensional variances.

6. A description and the personnel and equipment to be employed for each portion of the work including manufacture, installation and quality control.

7. The manufacturer's proposed production rate and mold life for this project and supply data demonstrating experience on similar past projects. Installer shall state the proposed installation rate.

8. The installer's intention to machine-lay or hand-lay the pavers and provide qualifying experience to date for the appropriate method of proposed installation.

1.07 MOCK-UPS

A. Install a 7 ft. x 7 ft. mock up for each paver area as described in Article 3.02. This area shall be the standard from which the work will be judged. Mock-ups shall not be included as part of the finished work.

1.08 DELIVERY, STORAGE, AND HANDLING

A. Deliver concrete pavers to the site in steel banded, plastic banded, or plastic wrapped cubes capable of transfer by fork lift or clamp lift. Unload pavers at job site in such a manner that no damage occurs to the product.

B. Sand shall be covered with waterproof covering to prevent exposure to rainfall or removal by wind. The covering shall be secured in place.

C. Coordinate delivery and paving schedule to minimize interference with normal use of buildings adjacent to paving.

1.09 ENVIRONMENTAL CONDITIONS

A. Do not install aggregate or pavers during heavy rain or snowfall.
B. Do not install sand and pavers over frozen base materials.
C. Do not install frozen sand.

PART 2 PRODUCTS

2.01 CONCRETE UNIT PAVERS

A. Concrete pavers at shall be supplied by :
   a. Borgert Products, Inc., 5170 Kalamath Street, Denver, CO, 80221, contact Glenn Van Horn (303)-783-3864, or Approved Equal.

B. Product names/shape, color, overall dimensions, and thickness shall be:
   1. Permeable Paver – Borgert Drenapave
      a. All pavers shall be 80mm thickness.
      b. Colors: As designated on plans and approved by Landscape Architect. Submit color samples for approval prior to delivery to the site.
      c. Type: Paver shall be ADA compliant, having joint and void separation not to exceed 13 mm. Approved paver shall have 2 mm chamfer. Top of chamfer to top of chamfer measurement on adjacent paver not to exceed 15 mm. Pavers shall contain average void opening minimum of 5% void ratio. Paver to have both joint space and ¼” and void spaces at 3/8” by design.
      d. Model: Drenapave
      e. Color Blend: Iron Range
      f. Reference construction plans for pattern and layout
   2. Cobble Swale Paver: Borgert Bavaria II Small, tumbled and non-tumbled
      a. All pavers shall be 70mm thickness.
      b. Colors: As designated on plans and approved by Landscape Architect. Submit color samples for approval prior to delivery to the site.
      c. Type: Paver shall be ADA compliant, having joint and void separation not to exceed 13 mm. Approved paver shall have 2 mm chamfer. Top of chamfer to top of chamfer measurement on adjacent paver not to exceed 15 mm. Pavers shall contain average void opening minimum of 5% void ratio. Paver to have both joint space and ¼” and void spaces at 3/8” by design.
      d. Model: Bavaria II Small, 5.5” x 5.5”
      e. Finish:
         1. Tumbled at cobble swale
         2. Non-tumbled at ADA crossings
      f. Color Blend: Iron Range
      g. Reference construction plans for pattern and layout

C. Pavers shall meet the following requirements set forth in ASTM C 936, Standard Specification for Interlocking Concrete Paving Units:

1. Average compressive strength of 10,000 psi (55 MPa) and Class A aggregate.

2. Average absorption of 5% with no unit greater than 7% when tested in accordance with ASTM C 140.

3. Resistance to 50 freeze-thaw cycles when tested in accordance with ASTM C 67.

4. ADA Compliance: Paver shall be ADA compliant, having joint and void separation not to exceed 13 mm.

5. Chamfer: Approved paver shall have 2 mm chamfer. Top of chamfer to top of chamfer measurement on adjacent paver not to exceed 15 mm.

6. Void Ratio: Pavers shall contain average void opening minimum of 5% void ratio.

7. Joint Space and Void Space: Paver to have both joint space at ¼" and void spaces at 3/8" by design.

8. Portland cement: Conform to ASTM C 150.

9. Aggregates: Conform to ASTM C 33 for normal weight concrete aggregate (no expanded shale or lightweight aggregate, including limestone) except that grading requirements shall not necessarily apply. Manufacture's integral mix design shall consist of Class A aggregates per MN Dot Manual #3127.

10. Water: Clean and free from any deleterious matter.

11. Other Constituents: Air-entraining admixtures, integral water repellents and finely ground silica shall have a proven record of performance and shall conform to the applicable and corresponding ASTM standards.

12. Dimensional Tolerances: Pavers shall be prismatic in plan and formed with straight, uniform edges. The tolerance for the flat portions of the sides shall not exceed 1/32" as measured with a steel straight edge. "Slumped" pavers exceeding this tolerance will be rejected. The length, width and thickness of the paving stones shall meet the allowable tolerances specified in ASTM C 936.

13. Color: Monochromatic colors from standard range of colors and/or natural gray.

14. Mold Life: No paver shall be used for this project which has been manufactured in a mold that exceeds the mold life specified in the Method Statement, without written approval of the installer and owner.

15. Mold Measurement: The measurement across a cluster for any mold shall not increase more than ½" for the entirety of the use of the mold for this project.

16. Deicer: The use of deicer on the pavers shall not void the manufacturer's warranty.

D. Pigment in concrete pavers shall conform to ASTM C 979.

E. Materials shall be manufactured in individual layers on production pallets.

F. Materials shall be manufactured to produce a solid homogeneous matrix in the produced unit.

2.02 VISUAL INSPECTION

A. All units shall be sound and free of defects that would interfere with the proper placing of units or impair the strength or permanence of the construction.

B. Minor cracks incidental to the usual methods of manufacture, or chipping resulting from customary methods of handling in shipment and delivery, shall not be deemed grounds for rejection.

2.03 SAMPLING AND TESTING

A. Manufacturer shall provide a minimum of three (3) years testing backup data showing manufactured products that meet and exceed ASTM 936-82 when tested in compliance with ASTM C-140.

2.04 AGGREGATE MATERIALS

A. Bedding Course Aggregate

The bedding course and void filler aggregate shall be free of organics and soluble salts, or other contaminants likely to cause efflorescence. The grading requirement shall be in compliance with the following gradation chart. This material will be crusher run and washed.

ASTM Sieve Size	Percent Passing (by weight)
1/2 inch	100 – 100

3/8 inch	94 – 100
¼ inch	39 – 94
No. 4	23 – 39
No. 8	8 – 23
No. 16	0 - 8

B. Base Course Aggregate:

The base course aggregate shall consist of open-graded stone and meet the following gradation chart. This material will be crusher run and washed.

ASTM Sieve Size	Percent Passing (by weight)
1-1/2 inch	100 – 100
1 inch	90 – 100
3/4 inch	48 – 90
½ inch	27 – 48
¼ inch	12 – 27
No. 4	0 - 12

C. Sub-Base Course Aggregate:

The sub-base course aggregate shall consist of open-graded stone and meet the following gradation chart. This material will be crusher run.

ASTM Sieve Size	Percent Passing (by weight)
4 inch	100 – 100

3 inch	80 – 100
2-1/2 inch	50 – 80
2 inch	20 – 50
1-1/2 inch	5 - 20
1 inch	0 – 5

NOTE: The above tables are intended to be a guide. Sieve size(s) and percent passing may vary from state to state / quarry to quarry.

2.08 GEOTEXTILE FABRIC

A. Geotextile fabric for Interlocking Concrete Paver Stabilization. Geotextile composed of high-tenacity polypropylene yarns.
   1. Tensile Strength – ASTM D-4632, 200 lbs
   2. Elongation at Break – ASTM D-4632, 15x10%
   3. CBR Puncture – ASTM D-6241, 700 lbs
   4. Trapezoidal Tear – ASTM D-4533, 75 lbs
   5. Apparent Opening Size – ASTM D-4751, 40 US Sieve, .430 mm
   6. Permittivity – ASTM D-4491, 0.05 Sec-1
   7. Water Flow Rate – ASTM D-4491, 4 g/min/sf
   8. UV Resistance at 500 Hours – ASTM D-4355, 70%

PART 3 EXECUTION

3.01 EXAMINATION

A. Verify that subgrade preparation, compacted density and elevations conform to the specifications. Compaction of the soil subgrade to at least 95% Standard Proctor Density per ASTM D 698 is recommended. Higher density, or compaction to ASTM D 1557 may be necessary for areas subject to continual vehicular traffic. Stabilization of the subgrade and/or base material may be necessary with weak or saturated subgrade soils. The Owner's Representative should inspect subgrade preparation, elevations, and conduct density tests for conformance to specifications.

C. Verify that aggregate base materials, thickness, compaction, surface tolerances, and elevations conform to the specifications. Verify that geotextile fabric has been installed in accordance with manufacturer's recommendation if necessary or as indicated in the plans.

D. Verify location, type, installation and elevations of edge restraints around the perimeter area to be paved.

E. Verify that base is dry, uniform, even, and ready to support sand, pavers, and imposed loads.

F. Begin bedding material and paver installation only after acceptance of base and edge restraints.

3.02 SUBGRADE

The installer shall verify that the subgrade has been shaped and compacted in conformance to the lines, grades and cross-sections shown on the plans, to provide for the construction of the Bio-Aquifer Storm System pavement structure.

Site grades can be raised to the design subgrade elevation using clean native earth fill (free of deleterious material). This fill should be placed in lifts not exceeding six inches (6") and compacted to a minimum of ninety-five percent (95%) Standard Proctor density. The final subgrade profile should be uniformly compacted to a minimum of ninety-eight percent (98%) Standard Proctor density and proof-rolled to delineate soft areas. Removing the unstable soil and replacing with clean, dry compacted earth fill shall be performed to repair these areas.

The requirements to include sub-drains in the pavement design would depend on the subgrade soil conditions. It is recommended that an experienced, qualified geotechnical engineer determine the requirements for sub-drains. If required, the sub-drain pipe shall consist of a four-inch (4") diameter PVC perforated pipe. The pipe would be placed at subgrade elevation and surrounded with a minimum of four inches (4") of approved open-graded stone. The sub-drain shall drain into a catch basin or other frost-free positive outlet.

3.03 – PLACEMENT OF SUB-BASE COURSE

The thickness of the sub-base course layer will depend upon the subgrade soil conditions and the anticipated traffic loadings. It is recommended that a site assessment be carried out by an experienced, qualified geotechnical engineer to determine the requirements of the base course.

The sub-base course shall consist of a minimum thickness of twelve inches (12") and be compacted using a vibratory 10-15 ton smooth-drum roller. It shall be installed in lifts not to exceed twelve inches (12"). Upon completion of the sub-base course installation, the area shall be proof-rolled using a heavy rubber-tired vehicle (such as a loaded tandem truck) to identify any areas requiring additional compaction. The sub-base course shall be installed to the elevation and cross-section per the plan documents.

3.04 – PLACEMENT OF BASE COURSE

The base course shall consist of a thickness of 2"-3", (not to exceed 4"), placed in one lift, and be compacted using a vibratory 10-15 ton smooth-drum roller. The base course shall be installed to the elevation and cross-section per the plan documents (+/- 1/2").

3.05 – PLACEMENT OF BEDDING COURSE

The bedding course shall be spread loose in a uniform layer to provide a depth after compaction of the paving units of 1”-2”. The contractor shall screed the bedding course using either an approved mechanical screed apparatus or by the use of screed guides and boards.

The screeded bedding aggregate shall not be subjected to any traffic by either mechanical equipment or pedestrian use prior to the installation of the paver units. The voids left after the removal of the screed rails shall be filled with loose aggregate as the paver bedding course proceeds.

3.06 – PLACEMENT OF PERMEABLE PAVERS

All edge restraints shall be constructed as shown on the plans and in place prior to the installation of the pavers and base course. Poured-in-place concrete curbs are recommended for the Bio-Aquifer Storm System.

The pavers shall be installed in approximately the order in which they were manufactured. No cluster shall be installed next to a cluster that was manufactured more than 1,000 cycles before or after.

Lay pavers in the pattern as shown on the drawings. Lay pavers away from the existing laying face or edge restraint in such a manner as to ensure that the pattern remains square. Chalk lines shall be used upon the bedding course to maintain straight joint lines. Joint spacing between pavers shall be between 1/8” and ¼”; however, the joint width may need to be increased to 3/8” (if necessary) to maintain straight joint lines. Lines and grades shown on the plans shall be established and maintained during the installation of the ecological permeable pavers.

Pavers shall be cut using a masonry saw. Block splitting shall not be permitted. All cut faces shall be vertical. Dry cutting of the pavers shall be performed utilizing a dust collection system. If wet cutting method used, paver surface must be washed while still wet to remove cement dust and slurry.

Once the pavers have been placed upon the bedding course and all cut pavers have been inserted to provide a full and complete surface, inspect the pavers for damaged units and remove and replace those units. Once all pattern lines have been straightened, initially compact the pavers and then place void filler into the paver openings to the top of the chamfer on the pavers and the surface swept broom clean.

The pavement surface shall be compacted to achieve consolidation of the bedding course and paving stones and brought to design levels and profiles by two passes of a suitable plate compactor. Compaction of the pavers shall be accomplished by the use of a vibratory plate compactor capable of a minimum of 5,000 pounds of compaction force. No compaction shall be permitted within five feet (5’) of unrestrained edges of the pavement.

On completion of vibration after void filling, after compaction, inspect the pavers for damaged

units and remove and replace those units. The surface tolerances shall be plus or minus ½" from finish levels and the pavers shall be flush to ¼" above edge restraints.

Additional void filler material shall be swept in the paver voids to within ½" from the bottom of the chamfer on the paving stones. Upon completion, the wearing course surface shall be swept clean of all excess materials. Remove from the site all surplus materials, equipment and debris resulting from these operations.

3.07 FIELD QUALITY CONTROL AND COMPLETION

A. Check final elevations for conformance to the drawings.

B. Contractor shall provide owner with 25 (twenty-five) additional concrete unit pavers of each style, size, and color to match installation. Additional pavers shall be delivered to the Owner in accordance with Section 1.07.

PART 4-MEASUREMENT AND PAYMENT

1.1 MEASUREMENT

A. Measurement will be made by the contract unit specified for Concrete Unit Pavers.

1.2 PAYMENT

Payment will be made at the contract unit price, and shall include required materials, transportation, equipment, labor, excavation, stockpiling, disposing, hauling off, watering, dust control, erosion and sediment control, compaction, sub-grade preparation, and all other items required to complete the work as required in accordance with the Contract Drawings and Specifications.

END OF SECTION 32 14 00

SECTION 32 15 40 CRUSHED STONE PAVING

PART 1 - GENERAL

1.1 RELATED DOCUMENTS

A. Contract Drawings and general provisions of the Contract, including General and Supplementary Conditions and Division 01 Specification Sections, apply to this Section.

1.2 SUMMARY

A. This Section includes requirements for demolition, earthwork, grading, furnishing, and placement of crushed stone paving.
   1. Furnish and place crushed stone paving, bonded with fine aggregate, constructed on a prepared underlying base course in accordance with these specifications and in conformity with the dimensions, typical cross section, and the lines and grades shown on the Contract Drawings. The locations where crushed stone paving will be used are shown on the Contract Drawings.

B. Related Sections:
   1. Division 01 Section “Layout of Work and Surveys”.
   2. Division 01 Section “Contractor Quality Control”.
   3. Division 01 Section “Erosion and Sedimentation Control”.
   4. Division 31 Section “Earth Moving”.

1.3 REFERENCES

A. ASTM C117 – Test Method for Materials Finer than No. 200 (75-um) Sieve in Mineral Aggregates by Washing.

B. ASTM C136 – Method for Sieve Analysis of Fine and Coarse Aggregates.

C. ASTM D4318 – Test Method for Liquid Limit, Plastic Limit and Plasticity Index of Soils.

1.4 SUBMITTALS

A. Material Analysis: Contractor shall provide copies of the following test data required by ASTM:
   1. ASTM C136 - Sieve Analysis.
   2. ASTM C127 - Specific Gravity and Absorption.
   3. ASTM C131 - L.A. Abrasion.

B. Samples: Provide a one (1) quart sample of material for approval.

1.5 DELIVERY, STORAGE, AND HANDLING

A. Packaged Materials: Deliver packaged materials in original, unopened containers showing weight, certified analysis, name and address of manufacturer, and indication of conformance with state and federal laws if applicable.

B. Bulk Materials:
   1. Do not dump or store bulk materials near structures, utilities, walkways and pavements, or on existing turf areas, plant materials or within critical root zones.
   2. Provide erosion-control measures to prevent erosion or displacement of bulk materials, discharge of soil-bearing water runoff, and airborne dust reaching adjacent properties, water conveyance systems, or walkways.
   3. Accompany each delivery of bulk materials with appropriate certificates.

C. Rejection of material.
   1. Evidence of inadequate protection or improper handling or storage shall be cause for rejection.
   2. Any product or material exhibiting signs of damage due to nonconformity to specifications or due to delivery, storage or handling shall be rejected by the Project Manager. Contractor shall be responsible for hauling off-site and disposing of according to general conditions and codes of the governing jurisdiction.

1.6 PROJECT CONDITIONS

A. Environmental requirements: Work shall occur only when weather and soil conditions permit in accordance with locally accepted practice.

B. Field Measurements: Verify actual grade elevations, service and utility locations, irrigation system components, and dimensions of plantings and construction contiguous with proposed crushed stone paving areas by field measurements before proceeding with work.

C. Interruption of Existing Services or Utilities: Do not interrupt services or utilities to facilities occupied by Owner or others.

D. Existing Conditions:
   1. Utilities: Determine location of existing and proposed underground utilities. Perform work in a manner to avoid damage. Hand excavate, as required.
   2. Excavation: Maintain grade stakes set by others until removal is mutually agreed upon by parties concerned.

E. Weather Limitations: Proceed with installation only when existing and forecasted weather conditions permit planting to be performed when beneficial and optimum results may be obtained.

1.7 MAINTENANCE SERVICE

A. General: Maintain Work in accordance with Division 01.
   1. Maintenance Period: Begin maintenance immediately after Work is completed. Maintain areas until the end of the Warranty period.

1.8 WARRANTY

A. See Division 01 Section “Warranty”.

PART 2 - PRODUCTS

2.1 CRUSHED STONE PAVING

A. Type: Crushed granite stone or gravel. Shall be unused material free of shale, lay, friable materials, organics and debris.
   1. Size Range: 3/8 inch maximum

Sieve Size	Percent Passing
2 inch	100
3/8 inch	100
No. 4	85
No. 8	63
No. 16	50
No. 30	39
No. 50	29
No. 100	18

   2. Color: Uniform grey or as approved by the Project Manager.

2.2 SOIL STABILIZER

A. Soil stabilizer or binder: Natracil by Gail Materials or approved equal.
   1. Local supplier:
   2. Swell volume: 35 ml/gm minimum in accordance with USP procedures.
   3. 90% minimum shall pass a No. 40 mesh screen.

B. Factory blended stabilized crushed stone paving. Provide in all locations shown on the drawings.
   1. Mix crushed stone paving material with Natracil with a pug mill that includes a weigh-belt feeder.
      a. Mix fourteen (14) pounds of binder per two thousand (2,000) pounds of aggregate.

PART 3 - EXECUTION

3.1 EXAMINATION

A. Examine areas where the Work of this Section will be performed for compliance with requirements and conditions affecting installation and performance.
   1. Verify that no foreign or deleterious material or liquid such as paint, paint washout, concrete slurry, concrete layers or chunks, cement, plaster, oils, gasoline, diesel fuel, paint thinner, turpentine, tar, roofing compound, or acid has been deposited in soil within the work area.
   2. Verify that final grades are completed in accordance with the drawings.

B. Proceed with installation only after unsatisfactory conditions have been corrected and approved by Project Manager.

3.2 QUALITY CONTROL

A. Mock-up: Provide field constructed sample installation of crushed stone paving, and prepared subgrade.
   1. Mock-up to be ten foot (10') x ten foot (10') and located where directed by Project Manager. Mock-up shall include proposed edge and banding, and surface stabilization if specified.
   2. Project Manager shall review mock up within forty eight (48) hours of notification by the contractor.
   3. Make necessary adjustments as directed by Project Manager.
   4. Obtain approval from Project Manager before proceeding with the Work.
   5. Retain and protect mock-up during construction as a standard for judging completed crushed stone paving work. Do not remove or destroy mock-up until work is completed.
   6. Accepted and properly maintained sample installations may remain in completed work if approved in writing by Project Manager.
   7. All work shall match accepted field mock-up.

3.3 PREPARATION

A. Protect structures, utilities, sidewalks, pavements, and other facilities, turf areas, existing landscape areas, and trees from damage.

B. Install erosion-control measures to prevent erosion or displacement of soils and discharge of

C. Install edging of type and in locations shown on drawings. Obtain acceptance of layout by Project Manager before excavating or installing. Make minor adjustments as required.

3.4 PLACEMENT OF CRUSHED STONE PAVING

A. Cut earthwork to width of trail/area to receive crusher fines paving to approximate depth section as specified on the Contract Drawings. Remove, haul and dispose of excess material off site, or use on-site with approval of Project Manager.

B. Complete excavation required in sub-grade before fine grading and final compaction of sub-grade is performed. Extend sub-grade compaction one foot (1') beyond proposed edge of crushed stone paving or as indicated on drawings.
   1. Where earth moving is required the sub-grade shall be compacted to ninety five percent (95%) standard proctor within two percent (2%) of the optimum moisture.
   2. Keep areas being graded or compacted shaped and drained during construction. Ruts greater than or equal to 1 inch deep in sub-grade shall be graded out and reshaped as required, and re-compacted before crushed stone paving placement.
   3. If the trail is part of a cross slope it should drain in the direction of the slope no greater than two percent (2%). Ensure that no low spots exist so that ponding does not occur.

C. Prior to placement of Crushed Stone Paving material, the sub-grade shall be proof rolled. Where soft spots are detected, scarify subgrade beneath Crushed Stone Paving trail to a minimum of six inch (6") depth. Moisture treat and compact to a minimum ninety five percent (95%) proctor density as determined by ASTM D698 or AASHTO T-99. Take moisture density tests every two hundred fifty (250) lineal feet of trail or proof roll. Treat and compact sub-grade, leaving it 5-inches below final grade for placement of Crushed Stone Paving. Compact material and retest by proof rolling to achieve approval of Project Manager.

D. Install crushed stone paving only after excavation and construction work which might injure it have been completed, and after edging has been completely installed on the compacted sub-grade. Install crushed stone paving, over compacted base course in areas indicated on plan.

E. Spread crushed stone evenly to fifty percent (50%) of specified depth. Avoid segregation of aggregate and contamination with lower courses or sub-grade.

F. Compact to ninety five percent (95%) of maximum density as determined by ASTM D1557.
   1. Maintain surface course moisture content within plus/minus three percent (± 3%) of optimum. Add water to quarry fines paving as required to achieve optimum moisture content and a uniform, compacted surface conforming to the finish grades indicated.
   2. Compact areas inaccessible to rolling by mechanical tamping.

G. Protect crushed stone paving from soil or other contaminates during and following installation.

H. Spread and compact additional crushed stone paving to achieve the required minimum compacted thickness. Compact per 3.4.F above.

3.5 PLACEMENT OF STABILIZED CRUSHED STONE PAVING

A. Complete items 3.4 A through H above using specified crusher fines material with pre-incorporated specified binder at specified application rates.

B. Do not allow traffic on stabilized crushed stone paving for two days.

3.6 MAINTENANCE AND REPAIRS:

A. Crusher Fines Paving:
   1. Areas that do not compact, become eroded or are degraded in visual quality and/or performance as determined by the Project Manager are to be removed and/or repaired. Obtain approval of repair methods from Project Manager prior to affecting repairs.

B. Stabilized Crusher Fines Paving:
   1. To repair, excavate damaged area leaving a minimum one inch depth of existing stabilized crushed stone paving. Apply stabilized crusher fines to existing surface as described above. Compact per 3.4 F above.
   2. Do not allow traffic on repaired stabilized crushed stone paving for two days or until paving has fully cured.

3.7 CLEANUP AND PROTECTION

A. All areas shall be clean at the end of each workday.

B. The contractor shall maintain protection during installation, curing, and maintenance periods.
   1. Erect temporary fencing or barricades and warning signs as required protecting newly installed Crushed Stone Paving areas from traffic, other trades, and trespassers. Maintain fencing and barricades throughout initial maintenance period and remove with approval of Project Manager.

C. Project completion: All debris, soil, trash, and excavated and/or stripped material resulting from Crushed Stone Paving operations and unsuitable for or in excess of requirements for completing work of this Section shall be disposed of off-site.

D. Maintain protection during installation and maintenance periods. See Division 1. Treat, repair or replace damaged work as required.

3.8 QUALITY ASSURANCE

A. Refer to Division 1 Section “Quality Assurance”.

PART 4 - MEASUREMENT AND PAYMENT

4.1 MEASUREMENT

A. Measurement will be made by the contract unit specified for Crushed Stone Paving.

4.2 PAYMENT

A. Payment will be made at the contract unit price, and shall include required materials, transportation, equipment, labor, excavation, grading, stockpiling, disposing, hauling off, watering, dust control, erosion and sediment control, landscape renovation as required in accordance with the Contract Drawings and Specifications.

END OF SECTION 32 15 40

SECTION 32 17 23 PAVEMENT MARKINGS

PART 1 - GENERAL

1.1 RELATED DOCUMENTS

A. Contract Drawings and general provisions of the Contract, including General and Supplementary Conditions and Division 01 Specification Sections, apply to this Section.

1.2 SUMMARY

A. This Section includes requirements for furnishing and applying traffic markings as shown on the Contract Drawings and as directed by the Project Manager. All work shall be done in accordance with the City and County of Denver's Traffic Engineering Service Standards which can be found at the following link:

https://www.denvergov.org/content/denvergov/en/right-of-way-services/engineering-regulatory-analytics/engineering-plan-review/manuals-regulations.html

B. Related Sections:
1. Division 31 Section "Asphalt Pavement".
2. Division 31 Section "Concrete Walks, Curbs, and Miscellaneous Flatwork".

1.3 SUBMITTALS

A. Product Data: For each type of product.
1. Include technical data and tested physical and performance properties.

B. Shop Drawings: For pavement markings.
1. Indicate pavement markings, colors, lane separations, defined parking spaces, and dimensions to adjacent work.
2. Indicate, with international symbol of accessibility, spaces allocated for people with disabilities.

C. Samples: For each exposed product and for each color and texture specified; on rigid backing, eight-inches (8") square.

1.4 PROJECT CONDITIONS

A. Environmental Limitations: Proceed with pavement marking only on clean, dry surfaces and at a minimum ambient or surface temperature of forty degrees (40°) F for alkyd materials, fifty-five degrees (55°) F for water-based materials, and not exceeding ninety five degrees (95°) F.

1.5 WARRANTY

A. Refer to Division 01.

PART 2 - PRODUCTS

2.1 PAINT

A. AASHTO M248-86, Type F, white or yellow traffic paint.

2.2 PREFORMED PLASTIC MATERIAL

A. Preformed plastic pavement marking material shall conform to ASTM D4505, Type 1, Class B, C, D, or E, and shall have a minimum thickness of sixty (60) mils and shall be non-preheating.

2.3 PAVEMENT-MARKING PAINT

A. Pavement-Marking Paint: Alkyd-resin type, lead and chromate free, ready mixed, complying with AASHTO M 248, **Type N and/or Type F**; colors complying with FS TT-P-1952.
   1. Color: **White** and/or **Yellow**, as required.

B. Pavement-Marking Paint: MPI #32, alkyd traffic-marking paint.
   1. Color: **White** and/or **Yellow**, as required.

C. Pavement-Marking Paint: Latex, waterborne emulsion, lead and chromate free, ready mixed, complying with FS TT-P-1952, Type II, with drying time of less than three minutes.
   1. Color: **White** and/or **Yellow**, as required.

D. Pavement-Marking Paint: MPI #97, latex traffic-marking paint.
   1. Color: **White** and/or **Yellow**, as required.

E. Glass Beads: AASHTO M 247, Type 1 **made of 100 percent recycled glass**.
   1. Roundness: Minimum **80** percent true spheres by weight.

PART 3 - EXECUTION

3.1 EXAMINATION

A. Verify that pavement is dry and in suitable condition to begin pavement marking according to manufacturer's written instructions.

B. Proceed with pavement marking only after unsatisfactory conditions have been corrected.

3.2 QUALITY CONTROL

A. Pre-installation Conference: Conduct at Project Site.
   1. Review methods and procedures related to marking pavement including, but not limited to, the following:
      a. Pavement aging period before application of pavement markings.
      b. Review requirements for protecting pavement markings, including restriction of traffic during installation period.

3.3 PREPARATION

A. Do not apply pavement-markings until layout, colors, and placement have been verified with the Project Manager.

B. Allow paving to age for a minimum of thirty (30) days before starting pavement marking.

C. Thoroughly clean all surfaces where markings are to be applied by brooming, airblasting, or other acceptable method. Surface shall be thoroughly dry prior to application.

3.4 THERMAL PLASTIC PAVEMENT MARKINGS

A. Crosswalks and Symbols: Apply preformed plastic pavement marking material in accordance with manufacturer's instructions and to the Denver Department of Public Works standards.

3.5 PAINT

A. Line Location: Before applying paint, chalk all striping locations for approval by the Project Manager to ensure accurate location of line.

B. Parking Lot Striping: Lines shall be four-inches (4") wide (+/- one-quarter-inch (1/4")). Double lines shall be six-inches (6") apart. Stop lines shall be twenty four-inches (24") wide (+/- one-quarter-inch (1/4")).

C. Symbols and Lettering:
   1. Apply graphic symbols and lettering with paint-resistant, die-cut stencils, firmly secured to pavement. Mask an extended area beyond edges of each stencil to prevent paint application beyond the stencil. Apply paint so that it cannot run beneath the stencil.

D. Equipment: Spray machine equipped with mechanical agitator, multiple applicators, and automatic skip control, capable of painting a clean-edged stripe of the designated width with straight edges. Bead dispenser shall be directly behind and synchronized with paint applicator. Spray nozzle and bead dispenser shall be shielded to prevent overspraying. Use adequate hand operated equipment in areas not accessible to striping machine.

E. Minimum Application Rates:
   1. Four-inch (4") Traffic Stripes: Solid, sixteen and one half (16.5) gallons per mile.
   2. Legends and Symbols: One one-hundredth (0.01) gallon per square foot.
   3. Stop Bars: One one-hundredth (0.01) gallon per square foot.
   4. Where required, broadcast glass beads uniformly into wet markings at a rate of six (6) pounds/gallon.

3.6 CLEANING

A. Perform cleaning during installation of the Work and upon completion of the Work. Remove all excess materials, debris, and equipment from site. Repair any unsatisfactory markings, overspray, or spills that occurred during the project.

3.7 PROTECTION

A. Protect pavement markings until dry or bonded.

3.8 QUALITY ASSURANCE

A. Refer to Division 1 Section “Quality Assurance”.

PART 4 - MEASUREMENT AND PAYMENT

4.1 MEASUREMENT

A. Measurement will be based on the percentage complete for the lump sum contract amount for Pavement Markings.

B. Measurement will be made by the contract unit specified for Soil Preparation. Measurement shall include the actual number of units of specified material(s) placed and accepted at the locations shown on the Contract Drawings, or as directed by the Project Manager, and in accordance with the Specifications.

4.2 PAYMENT

A. Payment will be made at the x price, and shall include required materials, transportation, equipment, and labor as required in accordance with the Contract Drawings and Specifications.

END OF SECTION 32 17 23

SECTION 32 18 16 PLAYGROUND PROTECTIVE SURFACING

PART 1 - GENERAL

1.1 RELATED DOCUMENTS

A. Contract Drawings and general provisions of the Contract, including General and Supplementary Conditions and Division 01 Specification Sections, apply to this Section.

1.2 SUMMARY

A. This Section includes the following:
1. Unitary synthetic poured rubber seamless surface.
2. Engineered Wood Fiber surface.

B. Related Sections:
1. Division 01 Section “Layout of Work and Surveys”.
2. Division 01 Section “Contractor Quality Control”.
3. Division 01 Section “Erosion and Sedimentation Control”.
4. Division 01 Section “Material and Equipment”.
5. Division 01 Section “Tree Retention and Protection”.
6. Division 03 Section “Cast-In-Place Concrete”.
7. Division 31 Section “Earth Moving”.
8. Division 32 Section “Crushed Stone Paving”.
9. Division 32 Section “Concrete Walks, Curbs, and Miscellaneous Flatwork”.
10. Division 33 Section “Subdrainage”

1.3 DEFINITIONS

A. CPSC: U.S. Consumer Products Safety Commission

B. Critical Height: Standard measure of shock attenuation. According to Consumer Products Safety Commission (CPSC) No. 325, this means "the fall height below which a life-threatening head injury would not be expected to occur."

C. SBR: Styrene-butadiene rubber.

D. EPDM: Ethylene propylene diene terpolymer rubber.

E. EWF: Engineered Wood Fiber; natural processed wood product manufactured expressly for use as a playground surface.

F. IPEMA: International Play Equipment Manufacturer’s Association.

1.4 PERFORMANCE REQUIREMENTS

A. Impact Attenuation: According to ASTM F 1292.

B. Accessibility of Surface Systems: According to ASTM F 1951.

C. Minimum Characteristics for EWF Surfaces: According to ASTM F 2075.

1.5 SUBMITTALS

A. Product Data: For each type of product indicated.

B. Shop Drawings: For each playground surface system, include materials, plans, cross sections, drainage, installation, penetration details, and edge termination. Include patterns made by varying colors of surfacing.

C. Samples for Initial Selection: For each type of playground surface system indicated.
1. Include similar samples of playground surface system and accessories involving color selection.

D. Samples for Verification: For each type of playground surface system indicated.
1. Minimum 1-quart loose-fill surface sealed in a container.
2. Minimum six-inch (6”) by six-inch (6”) Sample of synthetic rubber seamless surface.
3. Twelve-inch (12”) long by full-size cross section of border edging.
4. Minimum twelve-inch (12”) by- twelve-inch (12”) Sample of geosynthetic fabric.
5. Minimum six-inch (6”) by six-inch (6”) Sample of geosynthetic, molded-sheet drainage panel.
6. Subdrainage materials as required by Division 33 Section “Subdrainage”.

E. Coordination Drawings: Plans, drawn to scale, on which the following items are shown and coordinated with each other, using input from Installers of the items involved:
1. Extent of surface systems and use zones for equipment.
2. Critical heights for playground surfaces and fall heights for equipment.

F. Qualification Data: For qualified Installer and testing agency.

G. Material Certificates: For each type of playground surface system, from manufacturer.

H. Material Test Reports: Based on evaluation of comprehensive tests performed by a qualified testing agency, for each playground surface system.

I. Product Certificates: For each type of unitary synthetic playground surface system, from manufacturer.

J. Product Test Reports: Based on evaluation of comprehensive tests performed by a qualified testing agency, for each unitary synthetic playground surface system.

K. Warranty: Sample of special warranty.

L. Maintenance Data: Maintenance manuals to include manufacturer’s data on maintenance of playground surface system.

1.6 MAINTENANCE MATERIAL SUBMITTALS

A. Furnish extra materials that match products installed and that are packaged with protective covering for storage and identified with labels describing contents.

1. Synthetic Tile Units: Full-size units equal to one percent (1%) of amount installed, but no fewer than three (3) units.
2. Termination Edge Units: Three (3) full-size units.

1.7 QUALITY CONTROL

A. Installer Qualifications: An employer of workers trained and approved by manufacturer. Installer's Site Superintendent is to have a minimum of five (5) years of experience installing similar materials on similarly scaled projects.

B. Source Limitations: Obtain playground surface system materials, including primers and binders, from single source from single manufacturer.
1. Provide secondary materials including adhesives, primers, and geosynthetics, and repair materials of type and from source recommended by manufacturer of playground surface system materials.

C. Standards and Guidelines: Comply with CPSC No. 325, "Handbook for Public Playground Safety"; ASTM F 1292; and ASTM F 1487.

D. Testing Agency: Contractor to engage a qualified testing agency to perform tests and inspections.

E. Testing Services: Testing and inspecting of completed applications of playground surface system shall take place according to ASTM F 1292.

F. Remove and replace applications of playground surface system where test results indicate that it does not comply with requirements.

G. Additional testing and inspecting, at Contractor's expense, will be performed to determine compliance of replaced or additional work with requirements.

1.8 PROJECT CONDITIONS

A. Weather Limitations: Proceed with installation only when existing and forecasted weather conditions permit playground surface system installation to be performed according to manufacturers' written instructions and warranty requirements.

1.9 WARRANTY

A. Special Warranty: Manufacturer's standard form in which manufacturer agrees to repair or replace components of playground surface system that fail in materials or workmanship within the specified warranty period.
1. Failures include, but are not limited to, the following:
a. Reduction in impact attenuation.
b. Deterioration of surface and other materials beyond normal weathering.

2. Warranty Period: Five (5) years from date of Substantial Completion.

PART 2 - PRODUCTS

2.1 UNITARY SYNTHETIC SEAMLESS SURFACE

A. Surface System: Poured-in-place, single-layer system. Provide manufacturer's standard thickness as required for overall thickness indicated, tested for impact attenuation according to ASTM F 1292 and for accessibility according to ASTM F 1951.
   1. Products: Subject to compliance with requirements, provide one of the following or an approved equal.
      a. Surface America Incorporated; Play Bound Poured-in-Place.

   2. Cushion Course: Manufacturer's standard blend of recycled SBR and EPDM rubber particles forming an integral wearing course and cushion course, site mixed and applied.
   3. Binder: Weather-resistant, UV-stabilized, flexible, non-hardening, one hundred percent (100%) solids polyurethane complying with requirements of authorities having jurisdiction for nontoxic and low VOC content.
   4. Critical Height: Height and as indicated on Contract Drawings.
   5. Overall Thickness: Not less than as indicated on Contract Drawings.
   6. Primer/Adhesive: Manufacturer's standard primer and weather-resistant, moisture-cured polyurethane adhesive suitable for unit, substrate, and location indicated.
   7. Colors: Colors shall match the Artist’s paint palette for the Telescope and/or Face art features. Color samples shall be submitted and up to (4) colors to be selected by Landscape Architect. Color shall be 50% standard color and 50% black mix.
   8. Aliphatic binder shall be used.

B. Leveling and Patching Material for Use on Substrate below Synthetic Play Surface: Portland cement-based grout or epoxy- or polyurethane-based formulation suitable for exterior use and approved by playground surface system manufacturer.

2.2 ENGINEERED WOOD FIBER SURFACE

A. Engineered Wood Fiber:
   1. Random-sized wood fibers, in manufacturer's standard fiber size, approximately ten (10) times longer than wide; containing no bark, leaves, twigs, or foreign or toxic materials according to ASTM F 2075; in conformance with ASTM F 1292; graded according to manufacturer's standard specification for material consistency for playground surfaces and for accessibility according to ASTM F 1951.
   2. Certified to be in conformance with IPEMA materials standards for EWF.
   3. Products: Subject to compliance with requirements, provide one of the following or an approved equal.
      a. Fibar Group LLC (The); Fibar System.
      b. Zeager Bros., Inc.; Wood Carpet.

   4. Critical Height: As per Contract Drawings.
   5. Uncompressed Material Depth: Not less than as indicated on the Contract Drawings.

2.3 DRAINAGE

A. Engineered Wood Fiber Underdrain System:
   1. FibarSystem 300 or approved equal, consisting of:
      a. FibarDrain:

1) Minimum flow rapte of 10gpm/ft
2) Needle punched 100% non-woven geotextile sleeve encasing a monofilament nylon mesh.
3) Laid out on 6’-0 centers in the direction of the grade.

b. FibarFelt:
1) Needle-punched 100% non-woven geotextile fabric that separates the Engineered Wood Fiber from soil below.
2) Shall allow water to flow through, and prevent rock and soil contamination of the Engineered Wood Fiber.
3) Shall cover the sub-grade and drainage matrix to encourage proper drainage.
4) Seams should be overlapped 3”.

PART 3 - EXECUTION

3.1 EXAMINATION

A. Examine substrates and conditions, with Installer present, for compliance with requirements for maximum moisture content, subgrade and substrate conditions, drainage, and other conditions affecting performance of the Work.

B. Surface Substrates: Verify that substrates are satisfactory for unitary playground surface system installation and that substrate surfaces are dry, cured, and uniformly level or sloped to drain within recommended tolerances according to playground surface system manufacturer's written requirements for cross-section profile.
1. Concrete Substrates: Verify that substrates are dry, free from surface defects, and free of laitance, glaze, efflorescence, curing compounds, form-release agents, hardeners, dust, dirt, loose particles, grease, oil, and other contaminants incompatible with playground surface system or that may interfere with adhesive bond. Determine adhesion, dryness, and acidity characteristics by performing procedures recommended in writing by playground surface system manufacturer.
2. Gravel Substrate: Three quarter-inch (3/4”) angular gravel drainage stone, clean and washed; depth as indicated on Contract Drawings.

C. Proceed with installation only after unsatisfactory conditions have been corrected.

3.2 PREPARATION

A. General: Prepare substrates to receive surfacing products according to playground surface system manufacturer's written instructions. Verify that substrates are sound and without high spots, ridges, holes, and depressions.

B. Concrete Substrates: Provide sound supportive surface for playground surface system.
1. Repair unsatisfactory surfaces and fill holes and depressions.
2. Mechanically scarify or otherwise prepare concrete substrates to achieve recommended degree of roughness.
3. Saw cut concrete for terminal edges of playground surface systems as indicated.
4. Treat control joints and other nonmoving substrate cracks to prevent telegraphing through playground surface system.

C. Gravel Substrates: Provide sound supportive surface for playground surface system.
   1. Gravel substrate is to be an approved substrate as stated by the manufacturer of the final play surface. Provide documentation from manufacturer prior to construction of play surface.
   2. Edge boundary structures and drainage systems are to be installed prior to placement of gravel substrate.
   3. Place and consolidate gravel substrate within edge boundary structures shown on Contract Drawings. Depth as shown on Contract Drawings.
   4. Smooth gravel surface by raking. Obtain Project Manager's approval prior to placing surface.
   5. Repair any damage to gravel surface from foot traffic prior to placing final surface.

3.3 INSTALLATION, GENERAL

A. General: Comply with playground surface system manufacturer's written installation instructions. Install playground surface system over area and in thickness indicated.

3.4 DRAINAGE SYSTEMS

A. Install drainage systems as indicated on Drawings, Details, and per Division 33 Section "Subdrainage Systems".

B. Installation of FibarSystem 300:
   1. Excavate area to proper depth, based on Critical Fall Height.
   2. Minimum 1% downward grade to ensure proper drainage to FibarDrain Strip.
   3. Accurately grade and firmly compact entire area, especially where fill materials have been utilized.
   4. Excavate trench 2" wide x 6" deep, perpendicular to grade at lowest point of playground area.
   5. Install FibarDrain and connect low end of strip to storm drain or similar device to remove collected water.
   6. Install playground equipment.
   7. Install retaining border or curb.
   8. Install FibarDrain strips at 6' centers in direction of grade.
   9. Cover sub-grade and drainage trench with FibarFelt.
   10. Allowing 3" overlap at all seams.
      a. Slit to fit around footings of equipment.
      b. Overlap all slits with either next piece of FibarFelt or scrap piece, to ensure complete coverage.
   11. Install FibarMat wear mats either on FibarFelt, in middle of Fibar Engineered Wood Fiber® or on top of system.
   12. Permanently mark, with paint or other type of permanent marker, all the legs of the playground equipment with the compacted system design depth.
   13. Spread Fibar®EngineeredWood Fiber using a Bobcat, small front-end loader or our Express Blower Trucks.
      a. Care should be taken when driving over FibarDrain.
      b. Do not make sharp turns on FibarFelt or FibarDrain.
   14. Install all materials delivered.
   15. Additional materials are supplied to account for natural compaction.
   16. Material may be several inches high, until it compacts.
   17. Feather edges to make smooth transition to grade or border.

18. Hand spread and rake for smooth, finished surface.
19. After two weeks of active use, surface should be raked again.

3.5 INSTALLATION OF SEAMLESS PLAYGROUND SURFACE SYSTEMS

A. Seamless Surface: Mix and apply components of playground surface system according to manufacturer's written instructions to produce a uniform, monolithic wearing surface and impact-attenuating system of total thickness indicated.
   1. Substrate Primer: Apply over prepared substrate at manufacturer's standard spreading rate for type of substrate.
   2. Poured Cushion Course: Spread evenly over primed substrate to form a uniform layer applied at manufacturer's standard spreading rate in one continuous operation, with a minimum of cold joints.
   3. Intercoat Primer: Over cured cushion course, apply primer at manufacturer's standard spreading rate.
   4. Wearing Course: Spread over primed base course to form a uniform layer applied at manufacturer's standard spreading rate in one continuous operation and, except where color changes, with minimal cold joints. Finish surface to produce manufacturer's standard wearing-surface texture.
      a. Where colored patterns or graphics are indicated, place adjacent colored material as soon as placed colored material is sufficiently cured, using primer or adhesive if required by manufacturer's written instructions.

   5. Lacquer Topcoat: Spray or roller applied at manufacturer's standard coating rate in one continuous operation.
   6. Edge Treatment: Fully adhere surface system to edges and substrate while maintaining full thickness of surface system to comply with safety performance and accessibility requirements, as indicated on Contract Drawings.

3.6 INSTALLATION OF ENGINEERED WOOD FIBER PLAYGROUND SURFACE SYSTEMS

A. Engineered Wood Fiber: Place playground surface system materials including manufacturer's standard amount of excess material for compacting naturally with time to required depths after installation of playground equipment support posts and foundations.

B. Finish Grading: Hand rake to a smooth finished surface and to required elevations.

3.7 PROTECTION

A. Prevent vehicular traffic in total and pedestrian traffic over play surfacing for not less than forty eight (48) hours after installation or per manufacturer’s recommendations, whichever is longer.

B. Protect play areas from construction debris, including dust, dirt, runoff, trash and equipment following installation for the duration of construction.

3.8 PROTECTION

A. Maintain a neat and orderly work site at all times.

B. Upon completion of site work, clean up area, remove tools, equipment, materials and debris.

PART 4 - MEASUREMENT AND PAYMENT

4.1 MEASUREMENT

A. Unitary Synthetic Seamless Surface: Measurement will be based on the contract unit specified for Playground Protective Surfacing.

B. Engineered Wood Fiber Surface: Measurement will be made by the contract unit specified for Playground Protective Surfacing

4.2 PAYMENT

A. Payment will be made at the contract unit price, and shall include required materials, transportation, equipment, labor, earthwork, preparation of sub-grade, as required in accordance with the Contract Drawings and Specifications. Subdrainage systems associated with play areas beneath surfaces specified in this Section will be measured and paid under Division 3 Section "Subdrainage Systems".

END OF SECTION 32 18 16

SECTION 32 32 19 MODULAR BLOCK RETAINING WALL

PART 1 - GENERAL

1.1 RELATED DOCUMENTS

A. Contract Drawings and general provisions of the Contract, including General and Supplementary Conditions and Division 01 Specification Sections, apply to this Section.

1.2 SUMMARY

A. This Section includes requirements for furnishing materials for and installation of Modular Block Retaining Walls no greater than thirty inches (30") in height from finished grade to top of wall.
   1. The work covered under this section includes all necessary design criteria, materials, and construction requirements for providing walls in accordance with these specifications and in conformity with the details and dimensions shown on the Contract Drawings.

B. Related Sections:
   1. Division 01 Section "Layout of Work and Surveys".
   2. Division 01 Section "Contractor Quality Control".
   3. Division 01 Section "Erosion and Sedimentation Control".
   4. Division 01 Section "Material and Equipment".
   5. Division 01 Section "Tree Retention and Protection".
   6. Division 31 Section "Earth Moving".
   7. Division 31 Section "Excavation and Backfilling of Trenches".
   8. Division 32 Section "Aggregate Base Course".
   9. Division 33 Section "Subdrainage Systems".

1.3 REFERENCES

A. Project Geotechnical Report: Rocksol Consulting Group, May 2016.

B. ASTM C1372 - Dry-Cast Segmental Retaining Wall Units

C. ASTM D1557 - Standard Test Methods for Laboratory Compaction Characteristics of Soil Using Modified Effort

D. ASTM D4632 - Grab Breaking Load and Elongation of Geotextiles

E. ASTM D4751 - Standard Test Method for Determining Apparent Opening Size of a Geotextile

F. ASTM D6638 - Standard Test Method for Determining Connection Strength Between Geosynthetic Reinforcement and Segmental Concrete Units (Modular Concrete Blocks)

G. ASTM D6916 - Standard Test Method for Determining the Shear Strength Between Segmental Concrete Units (Modular Concrete Blocks)

H. ASTM E329 - Agencies Engaged in Construction Inspection, Testing, or Special Inspection

1.4 PERFORMANCE REQUIREMENTS

A. Basis of Design: Design of segmental retaining walls is based on products indicated. If comparable products of other manufacturers are proposed, provide engineering design for proposed products.

1.5 SUBMITTALS

A. See Division 01 Section “Submittals” for submittal requirements.

B. Samples for Verification: For each color and texture of concrete unit required. Submit full-size units.

C. Product Certificates: For segmental retaining wall units and soil reinforcement, from manufacturer.
   1. Include test data for shear strength between segmental retaining wall units according to ASTM D 6916.
   2. Include test data for connection strength between segmental retaining wall units and soil reinforcement according to ASTM D 6638.

D. Product Test Reports: Based on evaluation of comprehensive tests performed by a qualified testing agency, for segmental retaining wall units and soil reinforcement.
   1. Include test data for freeze-thaw durability of segmental retaining wall units.
   2. Include test data for shear strength between segmental retaining wall units according to ASTM D 6916.
   3. Include test data for connection strength between segmental retaining wall units and soil reinforcement according to ASTM D 6638.

E. Research/Evaluation Reports: For segmental retaining wall units and soil reinforcement, from Project Geotechnical Report, and City and County of Denver Standards.

F. Source quality-control reports.

G. Field quality-control reports.

1.6 QUALITY CONTROL

A. Testing Agency Qualifications: Qualified according to ASTM E 329 for testing indicated.

B. Mockups: Build mockups to verify selections made under sample submittals and to demonstrate aesthetic effects.
   1. Build mockup of segmental retaining wall approximately seventy-two inches (72”) long by not less than thirty-six inches (36”) high above finished grade at front of wall.
      a. Include typical soil reinforcement.
      b. Include typical base and cap or finished top construction.
      c. Include backfill to typical finished grades at both sides of wall.
      d. Include typical end construction at one end of mockup.

      Include thirty-six inch (36”) return at one end of mockup, with typical corner construction.

   2. Approved mockups may become part of the completed Work if undisturbed at time of Substantial Completion and approved by Project Manager.

3. Review methods and procedures related to segmental retaining walls including, but not limited to, the following:
    a. Structural load limitations.
    b. Construction schedule. Verify availability of materials, Installer's personnel, equipment, and facilities needed to make progress and avoid delays.

C. Testing Agency: Contractor to engage a qualified testing agency, approved by the Project Manager to perform tests and inspections.

D. Comply with requirements in Division 31 Section “Earth Moving" for quality control.
1. In each compacted backfill layer, perform at least 1 field in-place compaction test for each one hundred feet (100’) or less of segmental retaining wall length.
2. In each compacted backfill layer, perform at least 1 field in-place compaction test for each twenty-four inches (24”) of fill depth and each fifty feet (50’) or less of segmental retaining wall length.

E. Verify grades indicated on Contract Drawings are being met in final construction.

F. Verify subdrains are connected properly to outfalls, and are properly functioning.

1.7 STORAGE AND HANDLING

A. Protect concrete block from damage during storage. Store all materials off ground on palettes under protective covering. Store and handle concrete units and accessories to prevent deterioration or damage due to contaminants, breaking, chipping, or other causes.

B. Store geosynthetics in manufacturer's original packaging with labels intact. Store and handle geosynthetics to prevent deterioration or damage due to sunlight, chemicals, flames, temperatures above one hundred sixty degrees (160°) F or below thirty-two degrees (32°) F, and other conditions that might damage them. Verify identification of geosynthetics before using and examine them for defects as material is placed.

PART 2 - PRODUCTS

2.1 GENERAL

A. The Contractor shall provide all materials and incidentals to construct a complete wall system in place. The modular block retaining wall system shall include the precast wall units, aggregate base course, and drainage system as indicated on the plans.

2.2 MATERIALS

A. Precast Concrete Modular Block Wall Units:
1. Precast wall units shall have a minimum twenty-eight (28) day compressive strength of three thousand (3,000) PSI, and conform to ASTM C 1372. The concrete shall comply with freeze thaw durability with maximum water absorption not exceeding seven percent (7%) by weight.
2. Exterior dimensions shall not differ more than one sixteenth inch (1/16”) from manufacturers specifications.

3. All units shall be sound and free of cracks or other defects that would interfere with the proper placing of the unit or significantly impair the strength or permanence of the construction. The exposed surfaces of units shall be free of chips, cracks or other imperfections.
4. All exposed sides, except for top of cap units, shall be split face.
5. Acceptable manufacturers: Versa-lok, Keystone, Mesa or approved equal.
6. Color: Standard Gray.
7. Shape and Texture: Straight Split Provide units of basic shape and dimensions indicated with machine-split textured exposed faces.
8. Batter: Provide units that offset from course below to provide a 1:24 batter, or per manufacturer's recommended method for a near vertical wall.
9. Cap Units: Provide cap units of shape indicated in Plans with smooth, as-cast top surfaces without holes or lugs.
10. Special Units: Provide corner units, end units, and other shapes as needed to produce segmental retaining walls of dimensions and profiles indicated and to provide texture on exposed surfaces matching face.

B. Pins: Product supplied by segmental retaining wall unit manufacturer for use with units provided, made from nondegrading polymer reinforced with glass fibers.

C. Clips: Product supplied by segmental retaining wall unit manufacturer for use with units provided, made from nondegrading polymer reinforced with glass fibers.

D. Cap Adhesive: Product supplied or recommended by segmental retaining wall unit manufacturer for adhering cap units to units below.

E. Base Course: Class six (6) aggregate per CDOT 703.03.

F. Drainage Fill: Comply with requirements in Division 33 Section "Subdrainage Systems."

G. Nonreinforced-Soil Fill: Comply with requirements in Division 31 Section "Earth Moving" for satisfactory soils.

H. Drainage Geotextile: Nonwoven needle-punched geotextile, manufactured for subsurface drainage applications, made from polyolefins or polyesters; with elongation greater than 50 percent.
1. Apparent Opening Size: Number seventy (#70) to one hundred (#100) sieve, maximum; ASTM D 4751.
2. Minimum Grab Tensile Strength: one hundred ten (110) pounds; ASTM D 4632.
3. Minimum Weight: four (4) oz./sq. yd.

I. Perforated Drain/Subdrain: Refer to Division 33 Section "Subdrainage Systems".

J. Filter Material: Class C filter material per CDOT 703.09.

K. Base Material: Class 6 aggregate per CDOT 703.03.

PART 3 - EXECUTION

3.1 EXAMINATION

A. Examine areas and conditions, with Installer present, for compliance with requirements for excavation tolerances, condition of subgrades, and other conditions affecting performance of segmental retaining walls.

B. Proceed with installation only after unsatisfactory conditions have been corrected and approved by Project Manager.

3.2 PREPARATION

A. Prepare sub grade per block manufacturer's or supplier's recommendations.

B. Place a minimum of six inches (6") of aggregate base material in the trench, grade level and compact to minimum ninety-five percent (95%) of maximum modified proctor dry density per ASTM D 1557 at +/- two percent (2%) optimum moisture content.

3.3 INSTALLATION

A. Install per block manufactures or supplier's recommendations.

B. Precast modular block wall units shall be placed true to line and level as indicated on the Contract Drawings and as directed by the manufacturer's installation instructions.

C. First Course:
1. Place first course of segmental retaining wall units for full length of wall. Place units in firm contact with each other, properly aligned and level.
2. Tamp units into leveling base as necessary to bring tops of units into a level plane.
3. Bottom course shall be buried a full depth of block below finish grade.

D. Subsequent Courses: Remove excess fill and debris from tops of units in course below. Place units in firm contact, properly aligned, and directly on course below. Verify presence of specified batter.
1. For units with lugs designed to fit into holes in adjacent units, lay units so lugs are accurately aligned with holes, and bedding surfaces are firmly seated on beds of units below.
2. For units with lips at front of units, slide units as far forward as possible for firm contact with lips of units below.
3. For units with lips at bottom rear of units, slide units as far forward as possible for firm contact of lips with units below.
4. For units with pins, install pins and align units.
5. For units with clips, install clips and align units.

E. Cap stones shall be secured with an approved adhesive material, as recommended by the manufacturer.

3.4 FILL PLACEMENT

A. General: Comply with requirements in Division 31 Section "Earth Moving" NCMA's "Segmental Retaining Wall Installation Guide," and segmental retaining wall unit manufacturer's written instructions.

B. Fill voids between and within units with drainage fill. Place fill as each course of units is laid.

C. Place, spread, and compact drainage fill and soil fill in uniform lifts for full width and length of embankment as wall is laid. Place and compact fills without disturbing alignment of units. Where both sides of wall are indicated to be filled, place fills on both sides at same time. Begin at wall and place and spread fills toward embankment.
   1. Use only hand-operated compaction equipment within forty-eight inches (48”) of wall, or one-half of height above bottom of wall, whichever is greater.

D. Place drainage geotextile against back of wall and place layer of drainage fill at least twelve inches (12”) wide behind drainage geotextile to within twelve inches (12”) of finished grade. Place another layer of drainage geotextile between drainage fill and soil fill.

E. Wrap subdrainage pipe with filter fabric and place in drainage fill as indicated on Contract Drawings. Install in conformance with Division 33 Section “Subdrainage Systems”.

F. Place impervious fill over top edge of drainage fill layer.

G. Slope grade at top of wall away from wall unless otherwise indicated. Slope grade at base of wall away from wall. Provide uniform slopes that will prevent ponding.

3.5 CONSTRUCTION TOLERANCES

A. Variation from Level: For bed-joint lines along walls, do not exceed one quarter inch (1/4”) in ten feet (10’).

B. Variation from Indicated Batter: For slope of wall face, do not vary from indicated slope by more than one quarter inch (1/4”) in ten feet (10’)

C. Variation from Indicated Wall Line: For walls indicated as straight, do not vary from straight line by more than one quarter inch (1/4”) in ten feet (10’).

3.6 ADJUSTING

A. Remove and replace segmental retaining wall construction of the following descriptions:
   1. Broken, chipped, stained, or otherwise damaged units. Units may be repaired if Project Manager approves methods and results.
   2. Segmental retaining walls that do not match approved Samples and mockups.
   3. Segmental retaining walls that do not comply with other requirements indicated.

B. Replace units so segmental retaining wall matches approved Samples and mockups, complies with other requirements, and shows no evidence of replacement.

PART 4 - MEASUREMENT AND PAYMENT

4.1 MEASUREMENT

A. Measurement will be made by the contract unit price for Modular Block Retaining Wall.

4.2 PAYMENT

A. Payment will be made at the contract unit price, and shall include required materials, transportation, equipment, labor, design, survey, earthwork, sub-grade preparation, reinforcement grid, leveling pad, select fill, drainage material, stockpiling, disposing, hauling off, watering, dust control, erosion and sediment control, fine grading, as required in accordance with the Contract Drawings and Specifications. All required backfill of the wall shall be included in the payment and shall include furnishing and placing required backfill materials within the reinforced zone, but shall not include earthwork or fill outside of the reinforced zone.

END OF SECTION 32 32 19

SECTION 32 80 00 IRRIGATION SYSTEMS

PART 1 - GENERAL

1.1 RELATED DOCUMENTS

A. Contract Drawings and general provisions of the Contract, including General and Supplementary Conditions and Division 01 Specification Sections, apply to this Section.

1.2 SUMMARY

A. This Section includes the requirements for the installation of an underground irrigation system including the following:
   1. Trenching, stockpiling excavation materials, refilling and compacting trenches.
   2. Complete irrigation system including but not limited to piping, valves, fittings, heads and wiring, sensors, backflow preventer(s), Automatic Irrigation Controller(s) and final adjustments to insure complete coverage.
   3. Water connections.
   4. Replacement of unsatisfactory materials.
   5. Cleanup, inspections, and approval.
   6. Testing.

B. Related Sections:
   1. Division 01 Section “Contractor Quality Control”.
   2. Division 01 Section “Erosion and Sedimentation Control”.
   3. Division 01 Section “Tree Retention and Protection”.
   4. Division 31 Section “Earth Moving”
   5. Division 31 Section “Excavation and Backfilling of Trenches”.
   6. Division 32 Section “Concrete Walks, Curbs, and Miscellaneous Flatwork”.
   7. Division 32 Section “Soil Preparation”.
   8. Division 32 Section “Topsoil”.
   9. Division 32 Section “Automatic Irrigation Controllers”
   10. Division 32 Section “Turfgrass Seeding”.
   11. Division 32 Section “Native Seeding”.
   12. Division 32 Section “Sodding”.
   13. Division 32 Section “Trees, Plants, and Groundcovers”.

1.3 REFERENCES

A. Conform to requirements of reference information listed below except where more stringent requirements are shown or specified in Contract Documents.
   1. American Society for Testing and Materials (ASTM) - Specifications and Test Methods specifically referenced in this Section.
   2. Underwriters Laboratories (UL) - UL Wires and Cables.
   3. National Sanitation Foundation (NSF) – Piping and backflow prevention.
   4. American Water Works Association – Piping and backflow prevention.

1.4 QUALITY CONTROL

A. Special Requirements.

1. Tolerances: Specified depths of mains and laterals and pitch of pipes shall be installed per the Contract Drawings and specifications.
2. Compaction: Settlement of trenches is cause for removal of finish grade treatment, refilling, compaction, and repair of finish grade treatment.
3. Coordination with Other Contractors: Protect, maintain, and coordinate work with work under other Sections.
4. Damage to other Improvements: Contractor shall replace or repair damage to grading, soil preparation, seeding, sodding, planting and/or new site features done under other Sections during Work associated with installation of irrigation system at no additional cost to the City.
5. Damage or Disturbance to the Existing Irrigation Components: Damage to existing components as a result of work being performed by the Contractor will require the Contractor to replace the damaged components to the City's current standards, at no additional cost to the City.
6. Water Delivery Interruption: When working on an existing irrigation system, the Irrigation Contractor shall contact the Project Manager and inform them seventy-two (72) hours in advance of any water interruption that is required. The maximum irrigation system interruption is to be no more than seventy-two (72) hours during the growing season. The contractor shall make all necessary provisions including material, equipment, labor, delivery and scheduling as required to complete all points of connection, upgrades, and improvements within seventy-two (72) hours.
7. Watering: The Contractor is responsible for following all Denver Water rules and regulations for sod and seed establishment, available at http://www.denverwater.org. The Contractor shall post signage per Denver Water in a visible location(s) on site indicating "IRRIGATION TESTING AND MAINTENANCE IN PROGRESS" when Work (establishment, construction or warranty) requires irrigation system operation between the hours of 10 AM to 6 PM. The signs are to be used are available from Denver Water.
8. Permits: Work involving plumbing for installation of copper piping, ductile iron piping, backflow preventer(s), and related Work shall be executed by licensed and bonded plumber(s). Secure a permit at least forty-eight (48) hours prior to start of installation. Work involving high voltage electrical wiring, grounding and related Work shall be executed by licensed and bonded electrician. Secure a permit at least forty-eight (48) hours prior to start of installation

B. Pre-Construction Conferences and Site Meetings:
1. Contractor shall schedule and conduct a pre-construction conference to review in detail quality control and construction requirements for equipment and materials used to perform the Work. Conference shall be scheduled not less than ten (10) days prior to commencement of Work. All parties required to be in attendance shall be notified no later than seven (7) days prior to date of conference. Contractor shall notify qualified representatives of each party concerned with that portion of Work to attend conference, including but not limited to the Project Manager, Denver Parks Superintendent, Operations Supervisor, Water Conservation, Contractor's Superintendent, and Installer.
2. Prior to commencement of Work, Contractor shall schedule an on-site conference with Project Manager, Denver Forestry and any other parties designated by Project Manager to discuss tree protection requirements, marshalling locations, traffic control, and equipment access. Provide a minimum of seven (7) days notice prior to date of conference.
3. Contractor shall schedule on-site conferences the frequency of which is to be determined by the Project Manager and any other parties designated by the Project Manager to review project progress.

4. Contractor shall record Minutes of each conference and distribute to all parties in attendance within three (3) days of conference.

1.5 SUBMITTALS

A. Prepare and make submittals in accordance with conditions of the Contract prior to installation of any irrigation equipment:

B. Material List: Submit a PDF file of complete list of materials, and cut sheets indicating manufacturer, model number and description of all materials and equipment to be used. Show appropriate dimensions and adequate detail to accurately portray intent of construction.

C. Shop Contract Drawings: If applicable, submit shop Contract Drawings for pumps, backflows and assemblies. Include plumbing and foundation/support systems if the installation differs from the manufacturer's recommended installation.

D. Mock Ups:
1. Valve assembly: Provide a completely built electrical valve assembly. This mockup, to include electric valve, service tee, lateral valve riser length as required for mainline depth, and male thread by spigot outlet adapter. The mock up may be incorporated into the work toward the end of the project.
2. Swing joints: Provide a pre-manufactured or constructed swing joint assembly for each detail shown (e.g. - quick coupler, rotors and pop-up spray head) or as directed by the Project Manager
3. Drain valves: Provide a mock up including the service tee, required fittings, and drain valve.
4. Other: Mock ups that may be requested by the Project Manager.

E. Operation and Maintenance Manual: Coordinate scheduling/precipitation instructions with the City's operations staff. Submit one (1) digital copy in PDF format to the Project Manager including:
1. Winterization and spring start-up procedures.
2. Cut sheets of products.
3. Manufacturer's inspection and maintenance instructions for backflow preventer (if applicable).
4. Manufacturer's maintenance and operation instructions for pump station (if applicable).

F. Warranty: Submit two year written warranty, in accordance with WARRANTY/GUARANTEE section.

1.6 CONTRACT RECORD DRAWINGS

A. Prior to the installation of irrigation system, the Contractor will provide on-site copies of original irrigation design Contract Drawings "Record Contract Drawings". Contractor to revise Record Contract Drawings in red ink as Work progresses to show any changes to the plan and include field dimensions. Record Contract Drawings shall be brought up-to-date prior to any Pay Application Submittals that contain irrigation installation. Should the Contractor choose to utilize GPS for the purposes of documenting Work in progress, a hard copy print will need to be provided prior to Pay Application Submittal. A print of Record Contract Drawings shall be available at Project Site for review by the Project Manager at any time during the project.

B. Record Contract Drawings shall encompass entire scope of work including any altered existing equipment and altered zones, and notate the Automatic Irrigation Controller zone number, type of irrigation, GPM, operating PSI for any altered or added zone.

C. Preparation of Contract Record Drawings: Dimension from two permanent points of reference (building corners, sidewalk, road intersections or permanent structures) the location of the following items:

1. Point of connection.
    a. Meters and vault dimensions
    b. Curb Stops
    c. Isolation Valves
    d. Drain Valves
    e. Pumps
    f. Backflows
    g. Bypass lines
    h. Service lines

2. Routing of irrigation mainline. Provide dimensions for each one-hundred linear feet (100 L.F.) maximum along each routing and for each change of direction.
3. Routing of non-pressure lateral lines, layout and size.
4. Sprinkler control valves.
5. Quick coupling valves.
6. Drain valves
7. Hydrometer
8. Rain sensors/weather station
9. Wire splice boxes
10. Control wire routing if not with pressure mainline.
11. Gate valves.
12. Air relief valves.
13. Sleeves.
14. Flush valves.
15. Power service drop.
16. Two-wire grounding rods
17. Other related equipment as directed.

D. Make dimensions accurately at the same scale used in the original Contract Drawings, or larger. Notes and dimension lettering must be legible.

E. The irrigation legend must be changed to accurately reflect the irrigation equipment installed, if such equipment is not the same as originally specified on the contract documents. This includes flow rates, effective spray diameter/radius and operating pressure of all sprinkler heads.

F. The Project Manager will not certify any pay request submitted by the Contractor if the Contract Record Drawings are not current, and processing of pay request will not occur until Contract Record Drawings are updated.

G. Final Submittal: Upon completion of Project, prior to final acceptance, secure digital copy of irrigation design from the Project Manager and record installation information that reflects all changes made over the course of the construction project, prepared by a qualified draftsperson. Contract Record Drawings shall include details of any revisions as per actual installation. Deliver and submit to the Project Manager for review the following items:

1. Digital Contract Record Drawings in both PDF and AutoCAD release 2010 bound format (include any related X-ref files, plot files and pen settings.) Make any additional changes to the file as directed by the Project Manager prior to final submittal and approval.

H. Request for final payment will not be certified or processed until all Contract Record Drawing prints and digital files have been received and approved.

1.7 DELIVERY, STORAGE, AND HANDLING

A. Packing and Shipping: Deliver all components to job site in original unopened packaging containers prominently displaying manufacturer's name, volume, quantity, contents, instructions, and conformance to local, state, and federal law. Remove and replace cracked, broken, or contaminated items or elements prematurely exposed to moisture, inclement weather, snow, ice, temperature extremes, fire, or jobsite damage.

B. Handling, Storage, and Delivery of PVC Pipe:
1. Exercise care in handling, loading and storage of PVC pipe.
2. Provide forty-eight (48) hours advance notice of delivery to the Project Manager for observation of unloading and handling of PVC materials during delivery.
3. All PVC pipe shall be transported in a vehicle which allows length of pipe to lie flat so as not to subject it to undue bending or concentrated external loads. All sections of pipe that have been dented or damaged shall be discarded, and shall be replaced with new piping.

C. Storage and Protection: Deliver, unload, store, and handle materials, packaging and bundling products in dry, weatherproof condition in manner to prevent damage, breakage, deterioration, intrusion, ignition, and vandalism.

D. Only materials and equipment meeting project specifications and to be used as part of Project shall be stored on site. Project Manager to may verify at any time during construction period.

1.8 JOBSITE CONDITIONS

A. Existing Conditions:
1. Soil Conditions: The Contractor is responsible for investigating the type of soil and conditions in which lines are to be installed. No extra payment will be allowed due to difficulty in trenching, unless approved by the Project Manager.
2. Contractor is responsible for understanding the scope of related operations as specified and indicated in the Contract Drawings and Specifications before beginning Work under this Section.
3. Report unsatisfactory conditions in writing to the Project Manager within twenty-four (24) hours of discovery. Commencement of installation means acceptance of existing conditions by the Contractor.

B. Protection of Property:
1. Protect buildings, walks, walls, and other property from damage. Erect and maintain barricades, warning signs and lights, and provide guards as necessary or required to protect all persons on the site. Damage caused to asphalt, concrete, monuments, structures or other building material surfaces shall be repaired or replaced at no cost to the City. Restore disturbed areas to original condition.

2. The Contractor is responsible for potholing of all existing utilities, irrigation lines or any other underground improvements that may be damaged due to the installation of Irrigation Systems.

C. Protection of Existing Trees:
1. Refer to Division 01 Section “Tree Retention and Protection”.
2. Consult with the Office of the City Forester as requested by the Project Manager prior to trenching or boring within tree drip-lines. All trenching or work under drip line of any tree shall be dug by hand or by other methods as directed by the Forester or the Project Manager so as to prevent damage to limbs or branches and root system.
3. Directional boring that is permitted within tree protection area must occur at thirty-six inches (36”) below grade and may not take place anywhere within four feet (4’) of the drip line. Any exception must be agreed upon by the Office of the City Forester or the Project Manager.

D. Protection and Repair of Underground Lines:
1. Request utility locates seventy-two (72) hours in advance of any excavations by calling the Utility Notification Center of Colorado at 811. Take whatever precautions are necessary, including pot holing to verify location and depth to protect these underground lines from damage. If damage does occur, all damage shall be repaired by the Utility Owner. All costs of such repairs shall be paid by Contractor.
2. The Contractor is required to contact all private utility companies including Denver City Departments to locate all private utilities. The request for locates shall be a minimum of seventy two (72) hours prior to proceeding with any excavation. If, after such requests private utilities are encountered and damaged by the Contractor these shall be repaired at no cost to the City. If the Contractor damages staked or located private utilities, they shall be repaired by the Utility Owner at the Contractor’s expense.

E. Replacement of Paving and Curbs: Any damage due to work that occurs adjacent to or crosses existing roadways, paths, trails, curbing, sidewalks, etc. shall be restored to original condition at the contractors expense, and the satisfaction of the Project Manager.

1.9 WARRANTY/GUARANTEE

A. Provide a two year written warranty for material and installation from date of Substantial Completion.

B. Expenses due to vandalism before Final Acceptance shall be the Contractor’s responsibility.

C. Any settling of backfilled trenches that occurs during warranty period shall be repaired at no expense to the City, including complete restoration of damaged property.

D. Once Final Acceptance is granted, the City will maintain turf and planting areas during warranty period, unless maintenance by the Contractor is specified in the contract. The Contractor is responsible to monitor and coordinate Automatic Irrigation Controller scheduling and maintenance with the Project Manager for any seeding, sodding or planting areas under the Contractor’s warranty.

E. Project Manager reserves the right for Parks Operations Staff to make temporary repairs during the warranty period as necessary to keep systems in operating condition without voiding the Contractor’s warranty, nor relieving the Contractor of their responsibilities.

F. The Contractor shall make repairs and replacements within three days of notification. If the Contractor fails to make repairs within three days, the City will make such repairs at the Contractor's expense.

1.10 TURN OVER ITEMS

A. Where applicable, furnish the following maintenance items to City prior to Final Acceptance:
   1. Two (2) sprinkler heads for each size and type specified.
   2. Two (2) nozzles for each type of head.
   3. Two (2) head adjustment tools for each type of head installed.
   4. Two (2) valve keys for operating each type of manual valve. (Manual drain valves, isolation valves).
   5. Two (2) valve keys and hose swivels for each type of quick coupling valve.

1.11 MAINTENANCE DURING PROJECT CONSTRUCTION

A. Within Limits of Construction: Contractor shall fence, water, and keep weed free any turf, trees and any plantings within the limits of construction. Contractor is responsible for maintenance which includes picking up trash, weed control and mowing of turf and native areas within the limits of construction. Contractor is responsible for watering existing landscape within limits of construction. Turf and plants affected by mainline work or irrigation water service shutdown during irrigation season shall receive watering per Parks' schedule, with no interruption of watering greater than seventy-two (72)-hours. Contractor is responsible for maintenance until final acceptance is granted.

B. Outside Limits of Construction: Coordinate Automatic Irrigation Controller scheduling and maintenance operations with Project Manager for portions of City property unaffected by construction.

C. Additional Maintenance During Warranty Period:
   1. Make repairs and replacements needed due to defective workmanship and materials.
   2. Winterization: Include cost in bid for winterizing complete system at conclusion of irrigation season (during which system received final acceptance) within three (3)-days of notification by the City. System shall be voided of water using compressed air. Coordinate with the Denver Parks Operations Supervisor and the Project Manager to be present during the winterization procedures. The Contractor shall notify all persons that are to be present a minimum of forty eight (48) hours prior to the winterization of the system.
   3. Spring Start Up: To take place the following season within three (3) days of notification by the City. Open, operate, adjust system and make any necessary repairs. Coordinate with the Denver Parks Operations Supervisor and the Project Manager to be present during the spring start up procedures. The Contractor shall notify all persons that are to be present at the spring start up a minimum of forty-eight (48) hours prior to starting of the system.

PART 2 - PRODUCTS

2.1 GENERAL

A. Equipment must have performance characteristics to operate per the design conditions indicated. If any discrepancy or conflict exists between the quantities of equipment listed in the schedule and quantities shown on the Contract Drawings, the greater quantity shall govern.

B. All material shall be of the highest grade possible and where applicable, shall be marked accordingly and shall be new.

2.2 PIPE AND PIPE FITTINGS

A. Ductile Iron Pipe
1. Ductile Iron Pipe: Centrifugal cast ductile iron in metal molds for water pipe In accordance with ANSI C151 and AWWA A21.51 with asphaltic exterior coating and interior lining and coating in accordance with ANSI C151 and AWWA A21.51. Rubber-Gasket joints shall conform to ANSI/AWWA C111/A2.11.

B. Ductile Iron Fittings
1. All ductile iron fittings shall be made of class 350 ductile iron and shall have slanted, deep bell, rubber gasket style made in accordance with ASTM A-536, Grade 65-45-12 & AWWA C153. All fittings shall have a minimum of five (5) degree freedom of pipe deflection within the bell end.
2. All ductile iron pipe fittings, joint restraints and mainline isolation gate valves shall carry a minimum 10-Year warranty on any defective replacement products and labor replacement costs. Prior to install, the pipe fitting, joint restraint and mainline gate valve Manufacture shall provide documentation stating the above warranty information in writing and signed by the Manufactures Representative.
3. All ductile iron fittings and joint restraints shall have a fusion bonded epoxy coating on interior and exterior of the product surface, average of ten to twelve mm (10-12) thickness. Epoxy coating shall conform to the requirements of CSA Z245.20-20 and NSF 61 for water services. Tar/bitumen coating will not be approved.

C. Copper Pipe and Fittings:
1. Pipe: Type K, rigid, hard tempered.
2. Fittings - Wrought copper, solder joint type. Joints - Soldered with solder, forty five percent (45%) silver, fifteen percent (15%) copper, sixteen percent (16%) zinc, and twenty four percent (24%) cadmium and solidus at 1125° F and liquids at 1145° F.

D. Main and Lateral Lines:
1. Main Lines (pressurized, downstream of backflow prevention units):
   a. Class 200 PVC BE, size one inch (1”) to two inch (2”).
   b. Class 200 PVC RT/Gasketed, size two and one-half inches (2-1/2”) and larger.
   c. Velocities in PVC mainline shall not exceed five feet (5’) per second.
   d. All PVC pipe shall conform to the requirements of Type 1-ASTM-D-2241.
2. HDPE pipe
   a. Pressure rating DR 11 two hundred (200) PSI may be used by approval of the Project Manager for portions of mainline that require boring such as below trees and paving.

b. HDPE to PVC mainline requires epoxy coated repair coupler with joint restraints and stainless-steel pipe stiffener.

3. PVC Lateral Lines
   a. Class 200 PVC BE, size one-inch (1") to three-inch (3") inch.
   b. Velocities in PVC mainline shall not exceed five feet (5') per second.
   c. All PVC pipe shall conform to the requirements of Type 1-ASTM-D-2241.
4. Poly Lateral Lines:
   a. One hundred (100) PSI High Density NSF Polyethylene Piping – one inch (1") minimum diameter.
   b. Velocity of water flow in polyethylene pipe shall not exceed seven and one half (7-1/2) feet per second.

E. Sleeving:
1. Horizontal sleeves under paved surfaces: Class 160 PVC.
2. Vertical sleeves for access to drains and valves: Class 160 PVC.
3. Horizontal sleeving for boring applications: HDPE.

F. Brass Pipe and Fittings:
1. Brass Pipe: Eighty-five percent (85%) red brass, ANSI Schedule 40 screwed pipe.
2. Fittings: Medium brass, screwed one hundred twenty five (125) pound class.
   a. Mainline larger than three (3") inch to be installed using tapping saddles.

G. PVC Pipe and Fittings:
1. Identification Markings: Identify all pipe with following indelible markings:
   a. Manufacturer's name.
   b. Nominal pipe size.
   c. Schedule of class.
   d. Pressure rating.
   e. NSF (National Sanitation Foundation) seal of approval.
   f. Date of extrusion.
2. Class 200 PVC Pipe (pressurized main line two inches (2") and smaller):
   a. Pipe will be assembled with Schedule 80 PVC fittings and solvent welded using ASTM-F-656 purple primer followed with heavy bodied ASTM-D-2564 cement.
   b. Main lines shall be installed with concrete thrust blocks as per Details.
3. Class 200 PVC Pipe (pressurized main line two and one-half inches (2-1/2") and larger):
   a. Manufactured from virgin Polyvinyl Chloride compound in accordance with ASTM D2241 and ASTM D1784; cell classification 1254-B, Type 1, Grade 1.
   b. All fittings, service tees and pipe restraints shall be ductile iron fittings.
4. Class 200 PVC Pipe (all lateral lines)
   a. Pipe will be assembled with Schedule 40 PVC fittings and solvent welded using ASTM-F-656 purple primer followed with heavy bodied ASTM-D-2564 cement.
5. Flexible Plastic Pipe (non-pressure lateral lines):
   a. Manufactured from virgin polyethylene in accordance with ASTM D2239, designated as PE 3408. Maximum size two inches (2"); minimum size one inch (1").
   b. Fittings: Manufactured in accordance with ASTM D2609; PVC Type 1 cell classification 12454-B.
   c. Clamps: All stainless-steel worm gear screw clamps. Use two (2) clamps per joint on all insert fittings.
   d. Non-Potable water systems – Install purple marking tape in all trenches containing polyethylene lateral piping. Install at six-inch (6") depth.

e. Risers for Pop-up Heads: Shall be swing pipe, 0.49 ID, operating pressure of eighty (80) PSI.

2.3 VALVES

A. Gate Valve or Isolation Valve:
1. Valve for one and one-half inch (1-1/2") and smaller mainline (solvent-weld): Shall be cast iron body, threaded ends, left-hand opening, square nut operated, rubber resilient seated, FIPT joint AWWA gate valve with clear waterway equal to full diameter of pipe. Able to withstand continuous working pressure of one hundred fifty (150) PSI. Wheel type handle is unacceptable.
2. Valve for two inch (2") and larger mainline: Shall be cast iron body, push-on, left-hand opening, square nut operated, rubber resilient seated, mechanical joint AWWA gate valve with clear waterway equal to full diameter of pipe. Able to withstand continuous working pressure of one hundred fifty (150) PSI. Wheel type handle is unacceptable.

B. Automatic Control Valve:
1. Automatic Valve for Potable Water System: Rain Bird PEB Series Valve having manual flow adjustment and both internal and external manual bleed. PRS-D shall be used if pressure at the heads is greater than ten pounds over the optimal pressure as stated on the plans or measured in the field.
2. Automatic Valve for Non-Potable Water System: Rain Bird PESB Series. PRS-D shall be used if pressure at the heads is greater than ten (10) pounds over the optimal pressure as stated per the manufactures catalog, plans or measured in the field.
3. Valve Riser: Epoxy coated ductile iron riser with integral stainless-steel angle valve or approved equal.
4. Install one flexible marker tag on each valve. Mark each tag with inedible ink indicating zone number. Tags shall be: Potable water systems (yellow), Non-potable systems (purple)

C. Manual Drain Valve:
1. Drain Valve: Mueller Oriseal #H-10283 or AY McDonald, one inch (1") 3061 with brass swing joint assembly, or approved equal.

D. Quick Coupling Valves:
1. Buckner QB44RCAR10 brass two-piece body with winged stabilizer, designed for working pressure of one hundred fifty (150) PSI; one inch (1") FIP. Size as shown on drawing.
2. Quick Coupling Valves immediately after the backflow shall be used for winterization and shall be constructed of all brass swing joint and fittings. All other Quick Coupling Valve swing joints shall be constructed as shown on the details.

E. Hydrometer:
1. Netafim normally open hydrometer with reed switch register of one (1) pulse per ten (10) gallons
2. PRV option to be used when supply pressure exceeds one-hundred (100) psi.

F. Valve Boxes:
1. All valve boxes will have a stainless steel hex bolt locking system.
2. Isolation Valves, Quick Coupling Valves, Drain Valves, Wire Splices and Ground Rods: Carson Brooks, Model #910-4, ten inch (10") round box.

3. Electric Control Valve Box: Shall have locking cover branded with the zone numbers.
   a. Three-quarter inch (3/4") through one-inch (1") valves: Carson, Model #1015 standard box with bolt down T-cover.
   b. One and one-half inch (1-1/2") and two-inch (2") valves: Carson 1220 jumbo valve box with bolt down T-cover

4. Box color for valves:
   a. Green for potable systems.
   b. Purple for non-potable systems.

5. Gravel Leveling Bed and Drainage Sump in Valve Boxes: three quarters inch (3/4") crushed gravel covered in geo-textile fabric, as indicated on Contract Drawings.

G. Backflow Preventer:
1. High hazard, reduced pressure type, approved by University of Southern California (USC) or other approved testing laboratory; fully ported, ball-type gate valves on units 2-inch or smaller, as manufactured by Febco Model 825YA or approved equal. Resilient gate valves on units larger than two inch (2"); as manufactured by Febco Model 880V or approved equal.
2. Backflow Preventer Cover: Guardshack enclosure of appropriate size, equipped with Lock Shield Brackets, manufactured by BPDI, phone: 800-266-5411. Color: forest green.
3. Concrete Pad: Comply with Division 32 Section "Concrete Walks, Curbs and Miscellaneous Flatwork".

H. Air Relief Valve: On mainlines three inches (3") or larger, as per plan: Bermad 4415 (all cast iron) 2-inch double purpose vacuum air release valve or approved equal.

I. Pressure Reducing Valve: Netafim PRV option for Hydrometer where system pressures exceed one-hundred (100) PSI.

2.4 SPRINKLER HEADS

A. Heads: Provide fabricated riser units of the type and size as indicated on the Contract Drawings. Heads of a specific type or function in the system shall be of the same manufacturer and shall be marked with the manufacturer's name and identification in such a position that they can be identified without being removed from the system.
1. Pop-Up Sprinkler Heads in turf areas: RD-1806 SAM-PRS.
2. Pop-Up Sprinkler Heads in native grass areas and flower bed areas: Rain Bird RD-1812 SAM-PRS.
3. Pop-Up Sprinkler Nozzles shall be Rain Bird MPR Series nozzle. Strip series, rotary, and VAN nozzles may be used for specific approved applications at the direction of the Project Manager.
4. Gear Driven Heads: Hunter I-20, I-25, I-40, or Rain Bird 8005 series with stainless steel risers, internal check valve, PRS and MPR as specified per Contract Drawings. Riser height shall be five inches (5") in turf areas, and twelve inches (12") in native areas.

B. Flexible Connectors to Lateral Pipe:
1. Pop-up Heads: Shall be one-half inch (1/2") swing pipe
2. Gear Driven Heads: Shall be manufactured PVC swing joints as per detail.

2.5 LOW VOLUME IRRIGATION

A. Valve: Rain Bird XCZ-100-PRB-COM, size per Contract Drawings. Valves shall be installed in Carson Brooks #1220 jumbo box or approved equal with bolt down T-cover.

B. Supply Header: Class 200 PVC. All supply header piping to be installed at a twelve inch (12") depth, or as directed by the Project Manager.

C. Sub-surface Irrigation: Landscape Dripline, emitter spacing and flow as per Contract Drawings. All sub surface laterals to be buried at a minimum four inch (4") depth in soil, or as directed by the Project Manager.
   1. Flush valve in Carson round ten inch (10") valve box with bolt down T-cover as per the Contract Drawings.
   2. Rain Bird 1812 spray head with closed 6 series (orange) VAN nozzle shall be installed adjacent to flush valve at each end of the zone.

D. Tree/Shrub Irrigation: Pop up sprinkler heads shall be used for all tree, shrub applications including medians, and native areas.
   1. Shrub beds and median applications shall be RD-1806 SAM-PRS with specified nozzle as indicated on contract drawings.
   2. Tree watering systems in native areas shall be RD-1812 SAM-PRS with specified rotary nozzles as indicated on contract drawings.

2.6 AUTOMATIC CONTROL SYSTEM

A. See Division 32 Section "Automatic Irrigation Controllers".

B. Electrical Control Wiring:
   1. Two Wire Systems:
      a. Two-Wire Decoder Cable – Two (2), #12 to #14 AWG UL. parallel wires each with single, solid copper conductors with polyethylene insulation. Wires shall be contained within separate polyethylene jacket. Cable shall be Paige Electric P7072D with red jacket (NO SUBSTITUTIONS).
      b. Two-wire single station decoders Toro SB-DAC-1 to be installed in each valve box, one per valve in each box. Decoders shall have a serial number engraved on each decoder for future identification.
      c. Two-wire decoder cable shall have surge arrestors Toro SB-BLA installed every five hundred (500) ft. along two-wire path or every eight decoders whichever is the shortest distance. Surge arrestors are to be place in valve box containing valve cluster or in separate ten-inch (10") round valve box.
      d. Surge arrestor Ground rods are to have a minimum diameter of five-eighths of an inch (5/8") and a minimum length of eight feet (8'). Ground rod shall be located a minimum of 9 feet from two-wire cable located in mainline trench such that six (6) gauge copper wire connecting surge arrestor to ground rod is perpendicular to two-wire cable in mainline trench.
      e. Copper wire shall be six (6) gauge bare solid copper wire connected to the ground rod using a Cadweld GR1161GPLUS "Plus One Shot" welding kit.
      f. Two-Wire Splice Box: Carson #1419-12 box with bolt-down lid.
   2. Standard Low Voltage Wire Systems for Existing Systems:

a. Electrical Control Wire for 24VAC Solenoid: Golf Course Sprinkler Wire - #12 to #14 AWG UL approved direct burial solid conductor copper wiring with polyethylene insulation 0.045-inch thickness.
b. Electrical Common Wire: Golf Course Sprinkler Wire - #12 AWG UL approved direct burial solid conductor copper wiring with polyethylene insulation 0.045-inch thickness.
c. Wire Colors: Consistent color system throughout.
    1) Control Wires – Black.
    2) Common Wires – White.
    3) Spare Control Wires – Red.
    4) Spare Common Wires – Purple.
    5) Master Valve/Hydrometer Solenoid Wires – Green and Blue.
    6) Tracer Wire – Yellow.

C. Miscellaneous control wiring materials:

1. Materials for both standard and two wire systems.
    a. Data Wires: Paige 7171D-A direct burial shielded and armored signal cable with polyethylene jacket (NO SUBSTITUTIONS)
        1) Data Wire connections and splices shall be made with Ranger Servi-Seal.
    b. Control Wire and Two-Wire Decoder Cable connections and splices shall be made with 3M DBR/Y-6M direct bury splice, or approved equal, UL listed dry splice methods.
    c. Spare Wire and wire ends shall be capped with 3M DBR/Y.
    d. Mainline Tracer Wire: One (1) continuous AWG UL #12 tracer wire as detailed above all mainline
    e. Splice Box: Carson ten-inch (10”) round box.

2.7 MISCELLANEOUS MATERIALS

A. Rain Sensor: Hunter wireless Rain-Clik with by-pass or approved equal. Rain sensor shall be installed per manufacturer’s recommendations.

PART 3 - EXECUTION

3.1 PREPARATION

A. Utility Locates: Contact Utility Notification Center of Colorado at or 8-1-1 or 1-800-922-1987 prior to any excavation, for the marking of underground member utilities. The indication of utilities on the Contract Drawings does not relieve the Contractor of the responsibility for utility location. Contractor is responsible for potholing all utility locations to verify the depth and locations. Potholing related to irrigation installation shall be considered incidental to irrigation installation and will not be paid for separately. Route trenches to avoid existing utilities. Verify with the Project Manager any required relocation prior to installation.

B. Landscape Plan Review and Coordination: Contractor will be held responsible for coordination between landscape and irrigation system installation. Landscape material locations shown on the Landscape Plan shall take precedence over the irrigation system equipment locations. If irrigation equipment is installed in conflict with the landscape material locations shown on the

landscape plan, the Contractor will be required to relocate the irrigation equipment, as necessary, at Contractor's expense.

C. Pressure Verification: Contractor shall field verify the tap size, static pressure and verify Gallons Per Minute flow at the project site, prior to commencing Work or ordering irrigation materials, and submit findings in writing to the Project Manager. If Contractor fails to verify tap size, static water pressure and flow prior to commencing Work or ordering irrigation materials, Contractor shall assume responsibility for all costs required to make system operational and the costs required to replace any damaged landscape material. Damage shall include all required material costs, design costs, labor costs and plant replacement costs.

D. Inspection: Examine areas and conditions under which Work of this Section is to be performed. Do not proceed with Work until unsatisfactory conditions have been corrected.
   1. Grading operations, with the exception of fine grading, shall be completed and approved by Project Manager before staking or installation of any irrigation system begins.

E. Layout: Layout and stake system before beginning installation. Staking shall occur as follows:
   1. Mark, with paint, routing of pressure supply line and flag heads for all new zones. Contact the Project Manager forty-eight (48) hours in advance and request review of staking. The Project Manager will review staking and direct changes if required. Review does not relieve installer from coverage problems due to improper placement of heads after staking.
   2. Valve boxes and mainline will not be located in ball fields, and multi-use sport fields, recovery zones, or below playground equipment.
   3. If project has significant topography, free form planting beds, or other amenities which could require alteration of irrigation equipment layout as deemed necessary by the Project Manager, do not install irrigation equipment in these areas until the Project Manager has reviewed equipment staking.
   4. The Project Manager may request the City Forester's approval of proposed trenching prior to start of trenching.
   5. Review backflow prevention device location and operation with the Project Manager prior to mainline installation.

3.2 EXCAVATION AND BACKFILL

A. Install mainline pipe and wire sleeving under existing asphalt paving, concrete walks and critical root zones by directional boring. Pot-hole existing utilities for location and depth in advance of boring operations. When pot-holing in cross streets: include all permits, traffic control, backfill, compaction and surface restoration as required by the City and County of Denver Transportation Engineering Standards and Specifications. Compact backfill at bore pits around the end of sleeves to ninety-five percent (95%) compaction in landscape areas.

B. Excavation:
   1. Trenching:
      a. Trench excavation shall follow, as much as possible, the layout shown on Drawing. Dig trenches straight and support pipe continuously on bottom of trench. Trench bottom shall be clean and smooth with all rock and organic debris removed. Comply with OSHA standards for all trenching and excavation.
      b. Trenching under limb spread of existing trees: Accomplish by hand or other method that will not damage limbs or branches. Refer to Division 01 "Tree Retention and Protection" for additional precautions.

2. Clearances and Depths:
   a. Main pressure line: Make trenches of sufficient width to properly assemble and position pipe in trench. Clearances:
      1) Mainline and Lateral Piping clearance: Minimum clearance shall be one inch (1") horizontally on both sides of the pipe.
      2) Line Clearance: Provide minimum six inches (6") of clearance between each line, and minimum twelve inches (12") of clearance between lines of other trades.
      3) Installation of multiple runs of piping in common trench is prohibited.

   b. Pipe and Wire Depth to finish grade:
      1) Pressure Supply Piping: Twenty-seven inches (27") from the top of pipe, maximum variation +/- one inch (1").
      2) PVC Sleeving: At specified pipe or wire depth.
      3) Non-pressure Piping (gear driven heads): Eighteen inches (18") from top of pipe, maximum variation two inches (2").
      4) Non-pressure Piping (pop-up heads):
         a) Turf zones: eighteen inches (18") from top of pipe.
         b) Native seed zones: Twenty-four inches (24") from top of pipe, maximum variation two inches (2")
      5) Control Wiring and Two-Wire Decoder Cable: Side of pressure main when installed in the same trench; twenty-four (24) inches deep when installed separately from the mainline trench.

3. Vibratory Plow: Not permitted without written authorization of the Project Manager.

3.3 INSTALLATION OF IRRIGATION EQUIPMENT

A. Locate all equipment as near as possible to locations designated. Deviations shall be reviewed and approved by the Project Manager prior to installation.

B. Service Line Piping (copper or ductile iron piping from water meter to connection to backflow prevention device) - When pipe installation is not in progress, or at the end of each day, close pipe ends with tight plug or cap.
   1. Ductile Iron Pipe – Provide and install full pipe length protective polyethylene factory-formed sleeves around all piping to be buried. Pipe shall be bedded per Denver Water current standards and specifications.
   2. Copper piping – Installation shall match specifications for copper service line as required by Denver Water and in accordance with City and County of Denver Building Codes.

C. Sleeving:
   1. Install sleeving under any hard surface prior to surface being installed to accommodate piping and wiring.
   2. Minimum depth to top of pipe shall be determined by depth of mainline and lateral lines.
   3. Provide for a minimum cover of twenty-four (24) inches between the top of the sleeve and the bottom of the aggregate base for all pressure and non-pressure piping installed under asphaltic concrete or concrete paving.
   4. Sleeving located under areas where asphalt or concrete paving will be installed shall be bedded with a sand layer six inches (6") below the pipe and six inches (6") above the pipe.

5. Sleeving under existing walks or concrete pavement shall be done by boring or hydraulic driving. Where cutting of asphalt and/or concrete is necessary, it shall be done per the Contract Drawings and Details and or per the City and County of Denver Right of Way Standards. Where cutting of concrete is necessary remove the entire concrete section or "stone". Obtain permission to cut walks from the Project Manager.
6. Compact backfill material in three uniform lifts at ninety-five percent (95%) determined in accordance with ASTM D698 using mechanical tamping devices under pavement.
7. Do not allow sleeves to become filled with soil or other undesirable material. Tape ends of sleeves until commencement of pipe installation.
8. Mark sleeves on hard surfaces with a three inch (3") by three inch (3") "X" as per plans in a manner to ensure easy location in the future.
9. Sleeve size requirements for wire and pipe, control wire shall be placed in sleeving separate from pipe sleeving:
    a. 1" to 1-1/4" Pipe: 2" PVC
    b. 1-1/2" to 2" Pipe: 4" PVC
    c. 2-1/2" to 3" Pipe: 6" PVC
    d. 4" Pipe: 8" PVC
    e. 1 to 25 Control Wires: 2" PVC
    f. 26 to 50 Control Wires: 3" PVC
    g. Two-Wire Decoder Cable: 2" PVC
10. HDPE pipe shall be used for sleeving purposes when directional boring takes place under any existing hard surfaces, walks, roadways, trees, etc. HDPE pipe may be used as the irrigation mainline under existing hard surfaces, walks, roadways, trees, etc in lieu of sleeving.
    a. Install HDPE pipe to ensure that the end section of the HDPE pipe is a minimum of two feet (2') beyond any hard surface or tree dripline.
    b. All connections between HDPE pipe sections are to be made with fusion welded fittings per the manufactures recommendations.
    c. All connection fittings between HDPE and PVC or any other pipe material being used are to be made a minimum of twenty-four inches (24") away from any hard surface or tree drip line.
        1) Fittings to be used as couplings between HDPE and PVC shall be an epoxy coated repair coupler with joint restraints and stainless-steel pipe stiffener, installed as specified per the Contract Drawings and Manufacturer's recommendations.

D. Installation of Piping:
1. PVC Mainlines:
    a. Ensure that pipe is placed at a consistent depth and on a level base free of rocks and stones. Place manual drain valves at low points and dead ends of pressure supply piping to insure complete drainage of system. When pipe laying is not in progress, or at end of each day, close pipe ends with tight plug or cap. Perform Work in accordance with good practices prevailing in piping trades.
    b. Install mainlines a minimum of twenty-four inches (24") off any hard surface.
    c. Solvent Weld PVC Pipe (required on all pipe two inch (2") or smaller): Lay pipe and make all plastic to plastic joints in accordance with manufacturer's recommendations. Do not install pipe when air temperature is below forty degrees (40°) F.
    d. Gasketed End Pipe (required on all pipe two and one-half inches (2-1/2") or larger): Lay pipe and make pipe-to-fitting or pipe-to-pipe joint, following the manufacturer's recommendations. Install joint restraint fittings and pipe restraints

on all fittings and adjacent pipe runs per manufacturer's recommendations and per the Approved Plan.

E. Thrust Blocks on all PVC mainline two inches (2") and smaller: Construct thrust blocks per the Contract Drawings and the Details.

1. Concrete thrust blocks shall be a minimum of one (1) cubic foot of cast in place concrete in compliance with Division 03 Section "Cast-In-Place Concrete". Contact the Project Manager prior to placing thrust blocks for observation of thrust block excavation and initial placement. Install a bond breaker made of a minimum six (6)-mil plastic between the thrust block and fittings being restrained. Size thrust blocks per soil type table below:

Soil Type	lbs./SF
Mulch, Peat, etc.	0
Soft Clay	500
Sand	1,000
Sand and Gravel	1,500
Sand and Gravel with Clay	2,000
Sand and Gravel Cemented with Clay	4,000
Hard Pan	5,000

F. Joint restraints on all gasketed PVC mainline pipe two and one-half inches (2 1/2") and larger: Install joint restraints per the plans and or manufacturer's recommendations.

1. Joint restraints shall be installed as shown on the plans or per the manufacturer's recommendations. Prior to backfilling any joint restraints the Project Manager shall be present to verify that the restraints were installed in the proper locations and that all bolts have been tightened to the manufacturer's recommendations. Any restraints that are buried prior to inspection shall be excavated to allow for review and inspection at no additional cost to the City.

G. Flexible Plastic (Polyethylene) Pipe: Lay pipe and assemble fittings according to manufacturer's recommendations and per Contract Drawings and Details.

H. Control Wiring:

1. Two-wire control wiring:
   a. Bury two-wire decoder cable between Automatic Irrigation Controller and electric valves in pressure supply line trenches, strung as close as possible to mainline with such cable to be consistently located to one side of pipe, or in separate trenches.
   b. Make wire/cable splices at electric control valve connections as follows:
      1) Two-wire cable to two-wire cable - 3M Co. DBR/Y watertight connectors.
      2) Two-wire cable to electric valve solenoid wires - 3M Co. DBR/Y watertight connectors.
      3) Install all two-wire decoder cable splices not occurring at control valve in a separate Carson Industries Model #1419-12 body with bolt down T-cover wire splice valve box.
2. Standard Low Voltage Control Wire:
   a. Install one control wire for each control valve on standard low voltage wire systems.
   b. On standard low voltage wire systems install a total of five spare fourteen (#14) AWG UFUL control wires and one spare common wire from Automatic Irrigation Controller pedestal to the end of each leg of mainline. Label spare wires at Automatic Irrigation Controller and wire splice box.

c. Make all splices and electric control valve connections using 3M DBR/Y connectors

3. Bury control wiring between Automatic Irrigation Controller and electric valves in pressure supply line trenches, strung as close as possible to mainlines with such wires to be consistently located to one side of pipe, or in separate trenches.
   a. For standard low voltage wire systems bundle all twenty-four (24) volt wires at ten-foot (10') intervals.
4. Provide an expansion loop at every mainline change of direction, every electric control valve location (in valve box), and every five hundred feet (500').
   a. Form expansion loop in each control valve box by wrapping twenty-four inches (24") of wire around a one-inch (1") pipe and withdrawing pipe.
5. Install all control wire splices not occurring at control valve in a separate Carson Industries Model #910-10 body with 910-4 bolt down T-cover wire splice valve box.
6. Wire Testing:
   a. Existing wiring indicated to remain on documents is to be ohm-tested for continuity prior to construction. Contractor to produce report and copy the Project Manager of the results of such testing.
   b. New wiring: All new wiring to be tested for proper resistance prior to connection to valves and controller(s) for continuity. The Contractor is to produce the report and copy the Project Manager of the results of such testing.

I. Installation of Valves:
1. Electric Control Valves: Install electric control valves as detailed on the Contract Drawings.
   a. Electric Control Valves for two-wire system: Install electric control valves as detailed on the Drawings. Install one valve decoder module (Toro SB-DAC -series) per valve box, sized to operate all valves located within same box.
2. All low volume irrigation shall be zoned independently from turf, and product applications may not be mixed within zone.
3. Quick Coupling Valves: Install quick coupling valves as detailed on the Contract Drawings.
4. Drain Valves: Install manual drain valves at all low points in pressure supply line, whether indicated on the Contract Drawings or necessitated by actual conditions, to ensure proper drainage of the mainline.
5. Isolation/Gate Valves: Install as detailed in locations shown on the Contract Drawings.
6. Valve Boxes: Install one valve box for each type of valve as detailed. Install compacted gravel leveling bed after compaction of subgrade and prior to setting of valve box.
   a. Install filter fabric over gravel prior to setting valves boxes. Ensure that filter fabric extends a minimum of six inches (6") from the bottom and no more than six inches (6") from the top of box. Secure the filter fabric to the side of box with grey tape.
   b. Install valve boxes flush with finish grade and square to adjacent surface features and one another
   c. When valve boxes are grouped together, allow at least twenty-four inches (24") between valve box sides.
   d. Install valve boxes a minimum of eighteen inches (18") away from any hard surface.
   e. Cutting of valve box to give clearance for piping or valves is not permitted.

J. Valve Box Identification Branding:
   a. Brand Lids as follows in two inch (2") high minimum letters:

1)	Isolation/Gate Valve	“GV”
2)	Quick Coupler Valve	“QC”
3)	Manual Drain Valve	“DV”
4)	Air Relief Valve	“AR”
5)	Master Valve	“MV”
6)	Flow Sensor	“FS”
7)	Wire Splice Box	“SB”
8)	Grounding Rod	“GR”
9)	Filter	“FIL”

3.4 BACKFLOW PREVENTION

A. Backflow Prevention Device: Contractor must meet all applicable laws, rules and codes, including but not limited to Uniform Building codes and applicable amendments Plumbing Codes and State Water Regulations. Assemblies must be installed per the manufacturer’s specifications. Backflow devices shall not be installed within the public right-of-way.

1. Install in strict accordance with current requirements of Denver Water. Connections to the Denver Water System are to have an approved assembly for the type of protection they provide, either isolation or containment.
2. Successful Testing of backflow assembly by a certified Backflow Prevention Assembly Tester is Contractor’s responsibility and any cost shall be considered incidental. Test reports shall be forwarded to Denver Water in accordance with the State of Colorado regulations. Copies of the report, the tester’s certification and the certification of the testing equipment used are to be forwarded to the Project Manager.
3. Request for final payment will not be certified or processed until certification reports have been filed with Denver Water and received by the Project Manager.

3.5 INSTALLATION OF SPRINKLER HEADS

A. Install sprinkler heads where designated after the Project Manager has approved staking. Set to finish grade as detailed.

1. Spacing of heads shall not exceed the maximum indicated on the Contract Drawings unless re-staked or as directed by the Project Manager. In no case shall the spacing exceed maximum recommended by manufacturer.
2. Install gear driven heads on swing-joint risers as detailed. Swing joints to non-pressure lines shall be set at no more than forty-five degrees (45°) or less than ten degrees (10°).
3. Install pop-up heads on swing pipe as detailed.
4. Adjust part circle heads for proper coverage. Adjust heads to correct height after sod is installed. Plant placement shall not interfere with intended sprinkler head coverage, piping, or other equipment. The Project Manager may request nozzle changes or adjustments without additional cost to the City.

3.6 BACKFILLING

A. Do not begin backfilling operations until all piping and system components have been inspected by authorized Denver Parks Operations Staff or by the Project Manager. Backfilling shall not be done in freezing weather unless authorized by the Project Manager.

1. Leave trenches slightly mounded to allow for settlement after backfilling is completed.
2. Trenches shall be finish graded and sodded or seeded prior to walk-through of system by the Project Manager.

3. Materials: Excavated material is generally considered satisfactory for backfill purposes. Backfill material shall be free of trash, organic matter, frozen materials, and stones larger than one inch (1") in maximum dimension. Material not suitable for backfill shall be hauled away. Contractor shall be responsible for providing suitable backfill if excavated material is unacceptable or not sufficient to meet backfill, compaction, and final grade requirements.
4. Do not leave trenches open for a period of more than forty-eight (48) hours. Open excavations shall be protected in accordance with OSHA regulations.
5. Compact backfill to ninety-five percent (95%), determined in accordance with ASTM D698 utilizing the following methods in landscape areas:
    a. Mainline Pipe: Backfill and mechanically compact in three uniform lifts to a ninety-five percent (95%) compaction, utilizing optimum moisture content for the soil type.
    b. Secondary Pipe: Backfill in two uniform lifts and hydraulically or mechanically compact each.
    c. Puddling or ponding and/or jetting is prohibited within twenty feet (20') of building or foundation walls.

3.7 RAIN SENSOR

A. Rain Sensor: Install in accordance with manufacturer's instructions, and as shown on the Contract Drawings.
1. Install rain sensor(s) prior to starting any irrigation schedules for new sod or seed programs.
2. Install rain sensor(s) a minimum of fifteen (15) feet above grade, mount to a light pole, building or approved structure that is not shielded by tree canopies or structures and not effected by irrigation overspray.
3. All rain sensor(s) to be set at one eighth inch (1/8") inch prior to being installed or irrigation begins.

3.8 ADJUSTING

A. Upon completion of installation, "fine-tune" entire system by regulating valves, adjusting arcs and radius, and setting pressure reducing valves at proper and similar pressure to provide optimum and efficient coverage. Flush and adjust all sprinkler heads for optimum performance and to prevent overspray onto walks, roadways, and buildings as much as possible. Heads of same type shall be operating at same pressure within plus or minus ten percent (10%).

B. If it is determined by the Project Manager or Denver Parks Operations Staff that irrigation adjustments will provide improved coverage and water distribution, the Contractor shall make such adjustments prior to Final Acceptance. Adjustments may include but not limited to changes in nozzle sizes, degrees of arc, and control valve flow control regulations. Adjustments shall be completed at no additional costs to the City.

C. All sprinkler heads shall be set perpendicular to finish grade or within allowable limits shown on Contract Drawings.

D. Areas that do not conform to designated operation requirements, due to unauthorized changes or poor installation practices, shall be immediately corrected at no additional cost to the City.

3.9 FIELD QUALITY CONTROL

A. Flushing: After piping, risers, and valves are in place and connected, but prior to installation of sprinkler heads, quick coupler assemblies, and hose valves, thoroughly flush piping system under full head of water pressure from dead end fittings. Maintain flushing for five (5) minutes through furthermost valves. Cap risers after flushing.

B. Testing Pressurized Mainline: Prior to installing any plant materials (sod, seed, trees, shrubs, perennials) arrange and conduct pressure test(s) in the presence of the Project Manager. Arrange for testing a minimum of forty eight (48) hours in advance. The contractor is responsible to supply the hydrostatic test pump and all other equipment required to complete the test.

1. Set in place, cap and pressure test all piping under paving, in presence of the Project Manager prior to backfilling and paving operations.
2. After backfilling and installation of all control valves, fill pressure supply line with water, and pressurize to forty (40) PSI over the designated static pressure or one hundred twenty (120) PSI, whichever is greater, for a test period of two (2) hours.
3. All isolation valves, angle valves, ball valves and zone valve flow controls are to remain open during testing.
4. Leakage, Pressure Loss:
    a. Solvent welded PVC Pipe: Test is acceptable if zero pounds of pressure is evident during the test period.
    b. Ring Tight Pipe: Test is acceptable if two (2) pounds of pressure or less is evident during the test period.
5. Leaks: Detect and repair leaks. Replace defective PVC pipe with new full length pipe section. No pipe splices will be accepted within pipe sleeve. No PVC pressure couplings or slip-fix repair couplings will be allowed.
6. Retest system until test pressure can be maintained for duration of test.

3.10 COMPLETION INSPECTION

A. Arrange for the Project Manager to be present. Provide a minimum of forty-eight (48) hours of notice in advance of walk-through.

B. Entire system shall be completely installed and operational and trenches shall be finish graded and sod and seed in place prior to scheduling of walk-through.

C. Electrically operate each zone in its entirety for the Project Manager the time of walk-through.

D. A project inspection walk through shall include but is not limited to the following:

1. Contractor shall adjust, straighten and nozzle all heads prior to walk through. Review operation, coverage, head/nozzle adjustment, and system adjustment per specifications.
2. Contractor shall have all valves boxes unlocked prior to walk through. Open valve boxes to confirm materials, filter fabric, gravel bedding, wire splices, compaction, elevation, workspace access within boxes, clearance from lid and bedding, locking mechanisms, and zone branding. Interior of boxes should be free of foreign material, only filter fabric shall be visible in the bottom of boxes. All valves must be tagged with zone identification, Christy’s valve marker tags or equal and valve box lids must be branded with zone valve identification. Verify connections in all valve and wire splice boxes.

3. Contractor shall provide documentation that resistance tests for all spare common and hot wires has been performed and the results for ohms reading on each wire tested.
4. Confirm irrigation heads are at specified elevation and distance(s) from paved surfaces and curbs, plumb and soil compacted.
5. Inspect concrete size and elevation of pads for backflow assembly, hydrometer, and enclosure pads. Confirm quality of concrete, finishes, access to the Irrigation Controller and spare conduit/sleeving as required for wiring.
6. Review trench and related excavation repair including backfill, compaction, fine grade, seed, and sod installation.
7. Review appropriate use of purple valve lids and other product as required for reuse water applications.
8. Generate a punch list of items to be corrected prior to Final Completion.
9. Furnish all materials and perform all work required to correct all inadequacies of coverage due to deviations from Contract Documents.

3.11 CLEANING

A. Maintain continuous cleaning operation throughout duration of Work. Dispose of, all trash, waste materials, debris and excess soil generated by installation of irrigation system, off-site, at no additional cost to the City. Contractor shall clear all debris, including, soil, from all paths, walks, roads, and other hard surface areas.

3.12 PROTECTION

A. Restrict vehicular and pedestrian traffic from areas where irrigation has been installed. Erect temporary fencing or barricades and install warning signs as required or directed by the Project Manager at no additional cost to the City.

PART 4 - MEASUREMENT AND PAYMENT

4.1 MEASUREMENT

A. Measurement will be based on the percentage complete for the lump sum contract amount for Irrigation Systems.

4.2 PAYMENT

A. Payment will be made at the lump sum contract]price, and shall include required materials, transportation, equipment, labor, earthwork, trenching, stockpiling, disposing, hauling off, watering, dust control, erosion and sediment control, and fine grading, as required in accordance with the Contract Drawings and Specifications.

END OF SECTION 32 80 00

SECTION 32 84 33 AUTOMATIC IRRIGATION CONTROLLERS

PART 1 - GENERAL

1.1 RELATED DOCUMENTS

A. Contract Drawings and general provisions of the Contract, including General and Supplementary Conditions and Division 01 Specification Sections, apply to this Section.

1.2 SUMMARY

A. This Section includes requirements for the installation of automatic landscape irrigation controllers including the following:
   1. Trenching, stockpiling excavation materials, refilling and compacting excavations.
   2. Irrigation system components including but not limited to Automatic Irrigation Controller(s), associated wiring, timing and final adjustments.
   3. Testing.

B. Related Sections:
   1. Division 01 Section “Contractor Quality Control”.
   2. Division 01 Section “Erosion and Sedimentation Control”.
   3. Division 01 Section “Tree Retention and Protection”.
   4. Division 31 Section “Earth Moving”
   5. Division 31 Section “Excavation and Backfilling of Trenches”.
   6. Division 32 Section “Concrete Walks, Curbs, and Miscellaneous Flatwork”.
   7. Division 32 Section “Soil Preparation”.
   8. Division 32 Section “Topsoil”.
   9. Division 32 Section “Irrigation Systems”
   10. Division 32 Section “Turfgrass Seeding”.
   11. Division 32 Section “Native Seeding”.
   12. Division 32 Section “Sodding”.
   13. Division 32 Section “Trees, Plants, and Groundcovers”.

1.3 REFERENCES

A. Conform to requirements of reference information listed below except where more stringent requirements are shown or specified in Contract Documents.
   1. American Society for Testing and Materials (ASTM) - Specifications and Test Methods specifically referenced in this Section.
   2. Underwriters Laboratories (UL) - UL Wires and Cables.
   3. National Sanitation Foundation (NSF) – Piping and backflow prevention.
   4. American Water Works Association – Piping and backflow prevention.

1.4 QUALITY CONTROL

A. Special Requirements.
   1. Tolerances: Specified depths of mains and laterals and pitch of pipes shall be installed per the drawings and specifications.
   2. Compaction: Settlement of excavations is cause for removal of concrete controller pads, finish grade treatment, refilling, compaction, and repair of finish grade treatment.

3. Coordination with Other Contractors: Protect, maintain, and coordinate work with work under other Sections.
4. Damage to other Improvements: Contractor shall replace or repair damage to grading, soil preparation, seeding, sodding, planting and/or new site features done under other Sections during Work associated with installation of irrigation system at no additional cost to the City.
5. Damage or Disturbance to the Existing Irrigation Components: Damage to existing components as a result of work being performed by the Contractor will require the Contractor to replace the damaged components to the Cities current standards, at no additional cost to the City. This includes boxes, manifolds, valves, angle valves, risers, wire, heads, pipe, and controllers.
6. Water Delivery Interruption: When working on an existing irrigation system, the Irrigation Contractor shall inform the Project Manager seventy-two (72) hours in advance of any water interruption that is required. The maximum irrigation system interruption is to be no more than seventy-two (72) hours during the growing season. The contractor shall make all necessary provisions including material, equipment, labor, delivery and scheduling as required to complete all points of connection, upgrades, and improvements within seventy-two (72) hours.
7. Watering: The Contractor is responsible for following all Denver Water rules and regulations for sod and seed establishment, available at http://www.denverwater.org. The Contractor shall post signage per Denver Water in a visible location(s) on site indicating "IRRIGATION TESTING AND MAINTENANCE IN PROGRESS" when Work (establishment, construction or warranty) requires irrigation system operation between the hours of 10 am to 6 pm. The signs are to be used are available from Denver Water.
8. Permits: Secure a permit at least forty eight (48) hours prior to start of installation. Work involving high voltage electrical wiring, grounding and related Work shall be executed by licensed and bonded electrician(s). Secure a permit at least forty eight (48) hours prior to start of installation.
9. Pre-Construction Conferences and Site Meetings:
    a. Contractor shall schedule and conduct a pre-construction conference to review in detail quality control and construction requirements for equipment and materials used to perform the Work. Conference shall be scheduled not less than ten (10) - days prior to commencement of Work. All parties required to be in attendance shall be notified no later than seven (7) days prior to date of conference. Contractor shall notify qualified representatives of each party concerned with that portion of Work to attend conference, including but not limited to the Project Manager, Denver Parks Superintendent, Operations Supervisor, Water Conservation, Contractor's Superintendent, Toro factory representative, and Installer.
    b. Prior to commencement of Work, Contractor shall schedule an on-site conference with Project Manager, Parks Forestry and any other parties designated by Project Manager to discuss tree protection requirements, marshalling locations, traffic control, and equipment access. Provide a minimum of seven (7) days notice prior to date of conference.
    c. The Contractor shall schedule on-site conferences, the frequency of which is to be determined by the Project Manager, and any other parties designated by the Project Manager to review project progress.
    d. The Contractor shall record Minutes of each conference and distribute to all parties in attendance within three (3) days of conference.

1.5 SUBMITTALS

A. Prepare and make submittals in accordance with conditions of the Contract prior to installation of any irrigation equipment.

B. Material List: Submit a PDF file of complete list of materials, and cut sheets indicating manufacturer, model number and description of all materials and equipment to be used. Show appropriate dimensions and adequate detail to accurately portray intent of construction.

C. Shop Drawings: If applicable, submit shop drawings for Automatic Irrigation Controllers indicating electrical wiring design, and assembly. Include shop drawings for Automatic Irrigation Controller foundation/support systems.
   1. Operation and Maintenance Data: Coordinate scheduling/precipitation instructions with the City's Operations Staff. Submit three (3) bound manuals and one (1) digital copy to the Project Manager including:
   2. Cut sheets of products.
   3. Manufacturer's maintenance and inspection instructions for Automatic Irrigation Controller and related equipment.

D. Written warranty.

1.6 CONTRACT RECORD DRAWINGS

A. Prior to the installation of irrigation system, the Contractor will provide on-site copies of original irrigation design drawings "Record Drawings". Contractor to revise Record Drawings in red ink as Work progresses to show any changes to the plan and include field dimensions. Record Drawings shall be brought up-to-date prior to any Pay Application Submittals that contain irrigation installation. Should the Contractor choose to utilize GPS for the purposes of documenting Work in progress, a hard copy print will need to be provided prior to Pay Application Submittal. A print of Record Drawings shall be available at Project Site for review by the Project Manager at any time during the project.
   1. Record Drawings shall encompass entire scope of work including any altered existing controllers and/or wiring.
   2. Preparation of Record Drawings: Dimension from two permanent points of reference (building corners, sidewalk, road intersections or permanent structures) the location of the following items:
   3. Automatic Irrigation Controller location.
      a. Rain sensors/weather station
      b. Power service drop.
      c. Other related equipment as directed.
   4. Make dimensions accurately at the same scale used in the original drawings, or larger. Notes and dimension lettering must be legible.
   5. The irrigation legend must be changed to accurately reflect the irrigation equipment installed, if such equipment is not the same as originally specified on the contract documents. The Project Manager will not certify any pay request submitted by the Contractor if the Record Drawings are not current, and processing of pay request will not occur until Record Drawings are updated.
   6. Final Submittal: Upon completion of the Automatic Irrigation Controller installation, prior to final acceptance, secure digital copy of documents associated with the Automatic Irrigation Controller design from the Project Manager and record as installed information that reflects all changes made over the course of the construction project, prepared by a

qualified draftsperson. Record Drawings shall include details, including any revisions as per actual installation. Deliver and submit to the Project Manager for review the following items:

a. Digital Contract Record Drawings in both PDF and Auto CAD release 2010 bound (include any related X-ref files, plot files and pen settings.) Make any additional changes to the file as directed by the Project Manager prior to final submittal and approval.

7. Request for final payment will not be certified or processed until all Record prints and digital files have been received and approved.
8. Controller Zone Maps and Programming Schedule:
9. Do not prepare zone maps or irrigation controller charts until record drawings have been reviewed and approved by the Project Manager. The Project Manager shall provide an example of Automatic Irrigation Controller Charts and zone map required.
10. Provide one controller zone map for each Automatic Irrigation Controller installed.
    a. Zone Map shall be reproduction of record drawing, one page sized eleven inch by seventeen inch (11" X 17").
    b. Zone Map shall be print of actual record drawing of the system, showing the entire area covered by that Automatic Irrigation Controller on one sheet.
    c. Identify Automatic Irrigation Controller, all remote valves and lateral lines of each remote control valve, using a distinctly different color for each zone. Include the entire area of the Automatic Irrigation Controller's coverage. Provide a legend showing equipment being used.
    d. Submit digital copies in the original program format as well as PDF format to the Project Manager
11. Provide one zone map for the entire project.
    a. Zone Map shall be reproduction of record drawing, one page maximum twenty-four by thirty-six inch (24" x 36"), photo-reduced to maximum size and legibility.
    b. Identify all Automatic Irrigation Controllers, remote valves and lateral lines using different colors to distinguish adjacent zones.
    c. Submit digital copies in the original program format as well as PDF format to the Project Manager
12. The contractor is responsible for programming new and modified Automatic Irrigation Controllers to operate the irrigation system in conformance with all Denver Water restrictions and establishment rules for new landscapes per Denver Water, rules and regulations at: http://www.denverwater.org.
13. The Contractor shall be responsible for providing an Establishment Watering Schedule, Transition Watering Schedule and a Maintenance Watering Schedule to the Project Manager, Operation Supervisor and the Toro Factory Representative (when applicable). All irrigation schedules and zone controller charts shall ensure that there will be no ponding or runoff of water during any of the scheduled times. Prior to any plant material being installed all schedules shall be provided to the Project Manager and Operations Supervisor. The water schedule templates are available from Water Conservation and the Project Manager. Contractor shall make any modifications to the programming as requested by Project Manager or Operations Supervisor.
    a. Establishment Irrigation (Days 1-21): Plants shall be adequately watered for the first twenty-one (21) days after installation or until seeds have germinated and emerged or sod has become firmly rooted. Exact timing of irrigation cycles will depend on weather conditions, soil conditions, and speed of emergence of grass seed. Short, frequent irrigation cycles shall be used. Split cycles or the 'cycle and soak' feature must be employed to reduce erosion or run off in seeded areas. Do not exceed three inches (3") of total water per week. Coordinate with irrigation

system schedule and programming with the Project Manager, Operations Staff, and local Toro Field Representative. Contractor shall submit a meter reading before and after establishment to verify water use.

b. Transition Irrigation (Days 21-56): Less frequent, but longer watering cycles will provide moisture at depths that will encourage seedlings to continue to develop and sod to develop deeper roots. Allow the surface soils to dry slightly between watering to encourage deeper rooting. Watering shall be done utilizing historic evapotranspiration rates for the current watering month(s).

c. Maintenance Irrigation: Irrigate as needed to maintain an optimum stand of turf while minimizing water use. Irrigation frequency shall be adjusted at a minimum, based on monthly historical evapotranspiration rates and plant (turf and tree) water requirements.

1) It is the responsibility of the Contractor to coordinate with Project Manager, Operations Staff, and local Toro Field Representative. The local Toro Field Representative will assist the Contractor in the setup of the controller(s), but Contractor is responsible for the actual programming of Automatic Irrigation Controllers as needed to properly irrigate plant materials and turfgrass.

2) Provide Toro Field Representative with the following:

a) Zone gallons-per-minute (GPM)w schedule from documents.

b) Zone map to compare GPMs when setting up system flows.

14. Once sod has been laid, begin watering to build up the sub-soil moisture. This will be the most critical time to apply water. Water up to one and one-half inch (1-1/2") of water per day for the first two to three days. Probe the soil to determine if the moisture has penetrated down to a minimum of four inches (4"). During the next three weeks the amount of water needed will be similar to that of the historical evapotranspiration rates for the season per day. Each day may require more than one application depending on wind and temperature in order to keep the root zone and blades moist.
15. Provide one Programming Schedule for each Automatic Irrigation Controller installed, one page maximum, 8-1/2- by 11-inches. Project Manager shall provide an example of Controller Programming Schedule required and the scheduling templates.
16. Following review of Zone Maps and Schedules by the Project Manager, provide two additional color duplicates of Zone Maps and Schedules. One set of Zone Maps and Schedules shall be laminated between two layers of 3-mil plastic sheet. Provide digital copies of Zone Maps and Schedules in PDF format.
17. Zone Maps and Schedules shall be completed and reviewed prior to final review of irrigation system.
18. Request for final payment will not be certified or processed until all prints and files for Zone Maps and Schedules have been received and approved.

1.7 DELIVERY, STORAGE, AND HANDLING

A. Packing and Shipping: Deliver all components to job site in original unopened packaging containers prominently displaying manufacturer's name, contents, instructions, and conformance to local, state, and federal law. Remove and replace damaged items or elements prematurely exposed to moisture, inclement weather, snow, ice, temperature extremes, fire, or jobsite damage.

B. Storage and Protection: Deliver, unload, store, and handle materials, packaging and bundling products in dry, weatherproof condition in manner to prevent damage, breakage, deterioration, intrusion, ignition, and vandalism.

C. Only materials and equipment meeting project specifications and to be used as part of Project shall be stored on site. Project Manager to may verify at any time during construction period.

1.8 JOBSITE CONDITIONS

A. Existing Conditions:
   1. Soil Conditions: Investigate the type of soil and conditions in which lines are to be installed and allow for same type of soil in the proposal. No extra payment will be allowed due to difficulty in trenching, unless approved by the Project Manager.
   2. Contractor is responsible for understanding the scope of related operations as specified and indicated in the Drawings and Specifications before beginning Work under this Section.
   3. Report unsatisfactory conditions in writing to the Project Manager within twenty four (24) hours of discovery. Commencement of installation means acceptance of existing conditions by the Contractor.

B. Protection of Property:
   1. Protect buildings, walks, walls, and other property from damage. Erect and maintain barricades, warning signs and lights, and provide guards as necessary or required to protect all persons on the site. Damage caused to asphalt, concrete, monuments, structures or other building material surfaces shall be repaired or replaced at no cost to the City. Restore disturbed areas to original condition.
   2. Preserve and protect all trees and plants as shown on plans or as directed by the Project Manager or the City Forester. In the event damage does occur, all damage to plant material shall be brought to the attention of the Project Manager immediately for review by the City Forester. All damage to plant material shall be repaired or replaced per the direction of the City Forester at no cost to the City.

C. Protection of Existing Trees:
   1. Refer to Division 01 Section “Tree Retention and Protection”.

D. Protection and Repair of Underground Lines:
   1. Request utility locates seventy-two (72) hours in advance of any excavations by calling the Utility Notification Center of Colorado at 811. Take whatever precautions are necessary, including pot holing to verify location and depth to protect these underground lines from damage. If damage does occur, all damage shall be repaired by the Utility Owner. All costs of such repairs shall be paid by Contractor.
   2. The Contractor is required to contact all private utility companies including Denver City Departments to locate all private utilities. The request for locates shall be a minimum of seventy-two (72)-hours prior to proceeding with any excavation. If, after such requests private utilities are encountered and damaged by the Contractor these shall be repaired by the no cost to the City. If the Contractor damages staked or located private utilities, they shall be repaired by the Utility Owner at the Contractor’s expense.

E. Replacement of Paving and Curbs: Any damage due to work that occurs adjacent to or crosses existing roadways, paths, trails, curbing, sidewalks, etc. shall be restored to original condition at the contractor’s expense, and the satisfaction of the Project Manager.

1.9 WARRANTY/GUARANTEE

A. Provide a two (2) year written warranty for material and installation from date of Substantial Completion.

B. Expenses due to vandalism before Final Acceptance shall be the contractor's responsibility.

C. Any settling or displacement of concrete support pad for Automatic Irrigation Controller that occurs during warranty period shall be repaired at no expense to the City, including complete restoration of damaged property.

D. Once final acceptance is granted, the City will maintain turf and planting areas during warranty period, unless maintenance by Contractor is specified in the contract. Contractor is responsible to monitor and coordinate Automatic Irrigation Controller scheduling and maintenance with Parks' maintenance staff and or the Automatic Irrigation Controller factory certified technician for any seeding, sodding, or planting areas under Contractor's warranty.

E. Project Manager staff reserves the right to make temporary repairs during the warranty period as necessary to keep systems in operating condition without voiding the Contractor's warranty, nor relieving the Contractor of his responsibilities. The City reserves the right to change Automatic Irrigation Controller schedules should the contractor not respond within seventy-two (72) hours of a written request to make changes to programming. Doing so does not relieve the contractor of their contractual obligations.

F. Contractor shall make repairs and replacements within three (3) days of notification. If Contractor fails to make repairs within three (3) days, the City will make such repairs at Contractor's expense.

1.10 MAINTENANCE

A. Where applicable, furnish the following maintenance items to City prior to Final Acceptance:
   1. Four (4) Automatic Irrigation Controller cabinet keys. (If applicable).
   2. One (1) remote control device for each Automatic Irrigation Controller installed on the project. (If applicable).

1.11 MAINTENANCE DURING PROJECT CONSTRUCTION

A. Within Limits of Construction: Contractor shall fence, water, and keep weed free any turf, trees and any plantings within the limits of construction. Contractor is responsible for maintenance which includes picking up trash, weed control and mowing of turf and native areas within the limits of construction. Contractor is responsible for watering existing landscape within limits of construction. Turf and plants affected by mainline work or irrigation water service shutdown during irrigation season shall receive watering per Parks' schedule, with no interruption of watering greater than seventy-two (72) hours. Contractor is responsible for maintenance until final acceptance is granted.

B. Outside Limits of Construction: Coordinate Automatic Irrigation Controller scheduling and maintenance operations with Project Manager for portions of City property unaffected by construction.

C. Additional Maintenance During Warranty Period:

1. Make repairs and replacements needed due to defective workmanship and materials.
2. Winterization and Spring Start Up: See Division 32 Section “Irrigation Systems”.

PART 2 - PRODUCTS

2.1 GENERAL

A. Equipment must have performance characteristics to operate per the design conditions indicated. If any discrepancy or conflict exists between the quantities of equipment listed in the schedule and quantities shown on the Contract Drawings, the greater quantity shall govern.

B. All material shall be of the highest grade possible and where applicable, shall be marked accordingly and shall be new.

2.2 AUTOMATIC CONTROL SYSTEM

A. Automatic Irrigation Controller:
   1. Central Control systems shall be Toro Sentinel special build, AC 2-Wire, SBTW204AC-U2/SB18SS-PC-DG/VRA-GFI-FK. Update to Sentinel central control is required on all projects unless a variance is granted by Denver Parks Water Conservation.
      a. Sentinel satellite Automatic Irrigation Controller in prefabricated enclosure with pedestal is available exclusively through C.P.S. Distributors. Contractor shall purchase fully assembled enclosure including back panel, terminal strips, power supply unit, interior fused disconnect with 120-volt GFI duplex outlet, heavy duty transient surge protection boards, antenna(s) with cable, louvers and fan kit. Enclosure and pedestal shall be stainless steel with factory applied powder coating finish, Color #6005 Tiger Drylack color chart. Enclosure shall have a heavy-duty hasp for locking. Model number is per plan as specified by Toro.
      b. 450 MHz radio communication shall be fully compatible with Denver Parks and Recreation frequency required by the Operations District.
   2. If variance is granted, Automatic Irrigation Controller must have the following minimum characteristics:
      a. Solid state, fourteen (14) day clocks, with multiple programming capabilities.
      b. Capable of opening normally closed electric solenoid type valve.
      c. Automatic Timing: Capable of incremental units from three (3) to at least sixty (60) minutes per station.
      d. Water Budgeting: Capable of global program run time changes in percentage increments.
      e. Ability to provide repeat and/or syringe cycle capabilities and ability to eliminate or isolate one station without disturbing remaining Automatic Irrigation Controller features.
      f. Flow sensing capability with automatic shut-down or alarm signal.
      g. Minimum 40 VA transformer rating.
      h. Automatic Irrigation Controller cabinets shall be stainless steel Strongbox or Hoffman enclosure with factory-applied Federal Green powder-coat finish and heavy duty locking hasp. Size cabinet per specification from manufacturer.
      i. Automatic Irrigation Controller and cabinet require grounding per manufacturer recommendations, outside disconnect, inside fused disconnect, interior duplex GFI outlet.

j. Automatic Irrigation Controller shall have capability to interface with normally-open master valve.

3. Automatic Irrigation Controller and remote control equipment: Manufacturer and Model shall be noted on Drawing.
4. Contractor shall provide concrete pad, 120V electrical power, conduits, grounding and control wire connections to terminal surge strips.
5. Concrete Pad: Comply with plan detail and Division 31 Section "Concrete Walks, Curbs, and Miscellaneous Flatwork".

B. Electrical Control Wiring: See Division 32 Section "Irrigation Systems".

PART 3 - EXECUTION

3.1 PREPARATION

A. Utility Locates: Contact Utility Notification Center of Colorado at or 8-1-1 or 1-800-922-1987 prior to any excavation, for the marking of underground member utilities. The indication of utilities on the Contract Drawings does not relieve the Contractor of the responsibility for utility location. Contractor is responsible for potholing all utility locations to verify the depth and locations. Potholing related to irrigation installation shall be considered incidental to irrigation installation and will not be paid for separately. Route trenches to avoid existing utilities. Verify with the Project Manager any required relocation prior to installation.

B. Automatic Irrigation Controller Location: Contractor will be held responsible for coordination between existing and proposed landscape improvements, Automatic Irrigation Controller location, and installation. Landscape material locations shown on the Landscape Plan shall take precedence over the location of the Automatic Irrigation Controller location(s). If Automatic Irrigation Controller is installed in conflict with the landscape material locations shown on the landscape plan, the Contractor will be required to relocate the Automatic Irrigation Controller, as necessary, at Contractor's expense.

C. Inspection:
1. Examine areas and conditions under which Work of this Section is to be performed. Do not proceed with Work until unsatisfactory conditions have been corrected.
2. Grading operations, with the exception of fine grading, shall be completed and approved by the Project Manager before staking or installation of any irrigation system equipment begins.
3. Layout: Stake Automatic Irrigation Controller location before beginning installation and obtain the Project Manager's approval prior to installation.

3.2 INSTALLATION OF IRRIGATION EQUIPMENT

A. High Voltage Wiring for Automatic Irrigation Controller:
1. Provide one hundred twenty (120) volt power connection to Automatic Irrigation Controller.
2. All electric work shall conform to local codes, ordinances, and authorities having jurisdiction. All high voltage electrical work shall be performed by licensed electrician.

B. Automatic Control System:
1. Sentinel Central Control:

a. Contractor is to arrange and pay for C.P.S. Distributors to conduct a signal test and survey to maximize signal quality of any antenna and each Sentinel controller installed, and maximize layout for flow sensing. Contact Brandon Gully, with C.P.S Distributors at (303) 961-6959 or gullyb@cpsdistributors.com. Signal test and survey is to be conducted or verified prior to construction during full tree leaf-out when possible. Location of the controller shall be based on the field test. Contractor is responsible to coordinate optimization of central control with the Toro Factory Representative, Denver Parks Water Conservation, Denver Parks Operations Supervisor, and the Project Manager.

b. All irrigation schedules during establishment period and warranty period are to be submitted via email to the Toro Factory Representative, Denver Parks Water Conservation, Denver Parks Operations Supervisor and the Project Manager. Upon approval of the schedule the Toro Factory Representative will input schedules and make all changes, corrections, or updates within forty-eight (48)-hours.

C. Field Wiring Testing Requirements:

1. Contractor shall provide a pre-installation Ohm test report of all field wires located within an existing controller prior to removing any wires from the terminals in the Automatic Irrigation Controller. Provide a report to the Project Manager of each zone wire tested, the Ohm readings for each wire, date of test, Automatic Irrigation Controller location. Please indicate in the report any wires or solenoids that do not meet standards for the operating ranges of the specified or existing materials.
2. Contractor shall provide an Ohm test report of all field wires prior to installing any wires at the Automatic Irrigation Controller terminals. Provide a report to the Project Manager of each zone wire tested, the Ohm readings for each wire, date of test, Automatic Irrigation Controller location. Please indicate in the report any wires or solenoids that do not meet standards for the operating ranges of the specified or existing materials. The report shall include the Ohm readings prior to removal of the existing controller and after relocation or installation of new Automatic Irrigation Controllers.
3. All field wiring issues must be resolved prior to the connection of wires at the Automatic Irrigation Controller terminal strips.
4. Install Automatic Irrigation Controller and enclosure in accordance with the Contract Drawings and per the manufacturer's instructions. All work including but not limited to concrete pad, 120v electrical power, conduits, grounding and control wire connections to terminal surge strips shall be by the Contractor.
5. Provide Automatic Irrigation Controller to earth ground as per manufacturer recommendations. Central Control Satellite: Provide Automatic Irrigation Controller to earth ground in accordance with Article 250 of the National Electrical Code (NEC). Earth ground shall be ten (10) OHMS or less as measured by a Megger® or similar instrument, or as per manufacturer recommendation. Contractor shall arrange with the Toro Factory Representative and perform testing in presence of Denver Parks Operations Staff and the Project Manager.
    a. Ground rods are to have a minimum diameter of five-eighths-inch (5/8") and a minimum length of eight feet (8').
    b. Copper wire shall be six (6) gauge bare copper wire connected to the ground rod using a Cadweld GR1161GPLUS "Plus One Shot" welding kit.
6. Install above ground wiring in rigid conduit in accordance with applicable codes.

D. Coordinate installation with electrical work to insure electrical power supply line(s) are provided to Automatic Irrigation Controller location(s).

1. Permanently engrave date of installation and Xcel service pole number inside Automatic Irrigation Controller enclosure.

E. Wire control valves as shown on Contract Drawings.

3.3 FIELD QUALITY CONTROL

A. Testing Controller Operations:
1. Functional test of the control system shall be performed and demonstrate that all parts of the control system function as specified or intended, as per Parks' Central Control Certification Checklist. The functional test for each system shall consist of not less than thirty (30) days of continuous, satisfactory operation of the complete system serviced by a controller.
   a. Contractor to coordinate with the Project Manager to arrange Central Control Certification meeting.
2. Required attendees are the Toro Factory Representative, Denver Parks Water Conservation, Denver Parks Operations Supervisor and the Project Manager.
3. Any materials determined to be faulty as part of the installation shall be replaced or corrected by the Contractor at his expense in a manner respective to the Plans, Details, and other sections of this Specification. In the event of a system failure due to faulty installation, programming or workmanship, the thirty (30) day period will be repeated until testing is complete.

B. System Operations Orientation:
1. System Operation Training Session: A training and orientation session for City staff shall be required.
   a. The Contractor, the irrigation subcontractor, a representative of the manufacturer or distributor, and representatives of the City's maintenance and Denver Parks Water Conservation shall be present. The date and time of the session and attendees present shall be subject to approval by the Project Manager.
   b. The completed Record Drawings, Automatic Irrigation Controller Zone Maps and Automatic Irrigation Controller Program Schedule shall be reviewed for approval by Denver Parks Water Conservation.
   c. Automatic Irrigation Controller features, flow sensing, alarms and programming shall be reviewed.
   d. Hand held operation of field units shall be demonstrated.

3.4 COMPLETION INSPECTION

A. A project inspection walk through shall include but is not limited to the following:
1. Confirm quality of controller enclosure and mounting (there must be no gap between Automatic Irrigation Controller and concrete), grounding, high voltage installation, low voltage wiring, ID tagging of wires in Automatic Irrigation Controller, and communication set up. Each controller must have a color-coded zone chart and programming chart as per Specifications.
2. Contractor shall submit to the Owner written certification of testing that proper grounding for all controllers has been installed per the manufactures recommendations.

B. Certify Central Control Operation: Central control operation will be verified by Denver Parks' **Certification of Central Control Checklist**.

3.5 CLEANING

A. Maintain continuous cleaning operation throughout duration of Work. Dispose of all trash, waste materials, debris, and excess soil generated by installation of the controller, off-site, at no additional cost to the City. Contractor shall clear all debris, including, soil from all paths, walks, roads, and other hard surfaces.

3.6 PROTECTION

A. Restrict vehicular and pedestrian traffic from installation site. Erect temporary fencing or barricades and install warning signs as required or directed by the Project Manager at no additional cost to the City.

PART 4 - MEASUREMENT AND PAYMENT

4.1 MEASUREMENT

A. Measurement will be based on the percentage complete for the lump sum contract amount for Automatic Irrigation Controllers.

4.2 PAYMENT

A. Payment will be made at the lump sum contract price, and shall include required materials, transportation, equipment, labor, earthwork, stockpiling, disposing, hauling off, watering, dust control, erosion and sediment control, fine grading, temporary protection by fencing or other means, all maintenance required, specified controller charts, zone maps, Record Drawings and verification checklist until Final Acceptance of the work as required in accordance with the Contract Drawings and Specifications.

END OF SECTION 32 80 00

SECTION 32 91 13 SOIL PREPARATION

PART 1 - GENERAL

1.1 RELATED DOCUMENTS

A. Contract Drawings and general provisions of the Contract, including General and Supplementary Conditions and Division 01 Specification Sections, apply to this Section.

1.2 SUMMARY

A. This Section includes requirements for the preparation of soil for seeding, sodding, or planting operations. Soil preparation consists of ripping, fertilizing, soil conditioning, and fine grading the topsoil. Soil preparation as specified herein must precede all seeding, sodding, and planting.

B. Related Sections:
1. Division 01 Section “Erosion and Sedimentation Control”.
2. Division 31 Section “Clearing and Grubbing”.
3. Division 31 Section “Earth Moving”.
4. Division 32 Section “Topsoil”.
5. Division 32 Section “Turfgrass Seeding”.
6. Division 32 Section “Native Seeding”.
7. Division 32 Section “Sodding”.
8. Division 32 Section “Trees, Plants, and Groundcovers”.

1.3 DEFINITIONS

A. Fertilizer: A substance that is added to soil to help the growth of plants.

B. Soil Amendment: Any substance which is intended to improve the physical, chemical, or other characteristics of the soil.

C. Soil Conditioner: Combination of slow-release fertilizer, hummate, and Mycorrhiza.

1.4 SUBMITTALS

A. See Division 01 Section “Submittals” for submittal requirements.

B. Testing Agency Qualifications: Project Manager to approve prior to construction.

C. Soils Test Data: See Quality Control.

D. Product Data (for each type of product):
1. Include recommendations for application and use.
2. Include test data substantiating that products comply with requirements.
3. Material Certificates: For each type of soil conditioner, soil amendment, and fertilizer before delivery to the site, according to the following:
    a. Manufacturer's qualified testing agency's certified analysis of standard products.
    b. State, Federal and other inspection certificates shall accompany invoice for materials showing source or origin.

E. Samples: For each bulk-supplied material, one (1) quart volume of each in sealed containers labeled with content, source, and date obtained. Each Sample shall be typical of the lot of material to be furnished; provide an accurate representation of composition, color, and texture.

1.5 QUALITY CONTROL

A. Testing Agency: Retain an independent, state-operated, or university operated laboratory experienced in soil science, soil testing, and plant nutrition; with the experience and capability to conduct the testing indicated and that specializes in the types of tests to be performed.
   1. Laboratories: Subject to compliance with requirements, provide testing of materials in the Section by a qualified testing laboratory approved by the Project Manager.
   2. Multiple Laboratories: Work may be divided among qualified testing laboratories specializing in physical testing, chemical testing, and fertility testing.

B. Testing: Contractor is responsible for performing the following tests:
   1. Soils Test of existing soil, after rough grading, including testing agency's recommendations for amendment and fertilizer for landscape plants, turf, and native seed.

C. Preconstruction Testing
   1. Engage the approved testing agency to perform preconstruction soil analyses on existing on-site soil, imported topsoil, and pre-amended imported soil.
   2. Notify Project Manager seventy-two (72) hours in advance of the dates and times when laboratory samples will be taken.

D. Soil Sampling Requirements
   1. Sample Collection and Labeling: Have samples taken and labeled by the Contractor in the presence of the Project Manager and under the direction of the testing agency.
   2. Number and Location of Samples: Minimum of five (5) samples per acre collected randomly throughout the areas to receive similar soil preparation, including seed/sod, native seeding, planting beds, and gardens. Provide a site plan of the sampling locations to the Project Manager for approval, prior to sampling.
   3. Procedures and Depth of Samples: Collect samples to a depth of six inches (6") and combine in a clean plastic container.
   4. Mixing of Samples: Mix samples together thoroughly, removing plant debris and breaking up clods.
   5. Labeling: Label each sample with the date, location keyed to a site plan or other location system, visible soil condition, and sampling depth.

E. Testing Requirements
   1. Soil Texture: Soil-particle, size-distribution analysis by the following methods according to SSSA's "Methods of Soil Analysis - Part 1-Physical and Mineralogical Methods":
      a. Sieving Method: Report sand-gradation percentages for very coarse, coarse, medium, fine, and very fine sand; and fragment-gradation (gravel) percentages for fine, medium, and coarse fragments; according to USDA sand and fragment sizes.
      b. Hydrometer Method: Report percentages of sand, silt, and clay.
   2. Fertility Testing: Soil-fertility analysis shall, include the following:
      a. Percentage of organic matter.
      b. CEC, calcium percent of CEC, and magnesium percent of CEC.
      c. Soil reaction (acidity/alkalinity pH value).
      d. Buffered acidity or alkalinity.
      e. Lime estimate.

f. Soil texture estimate.
g. Nitrogen ppm.
h. Phosphorous ppm.
i. Potassium ppm.
j. Manganese ppm.
k. Zinc ppm.
l. Iron ppm.
m. Boron ppm.
n. Copper ppm.
o. Sodium ppm**,** and sodium absorption ratio.
p. Soluble-salts ppm.
q. Presence and quantities of problem materials including salts and metals cited in the Standard protocol. If such problem materials are present, provide additional recommendations for corrective action.
r. Other deleterious materials, including their characteristics and content of each.

F. Recommendations: Based on the test results, provide recommendations for soil treatments, amendments, and conditioners to be incorporated to produce a soil suitable for healthy viable plant growth for the species indicated in the Contract Documents. Include, at a minimum, recommendations for nitrogen, phosphorous, and potassium fertilization, and for micronutrients.
1. Fertilizers and Soil Amendment Rates: State recommendations in weight per one thousand (1,000) sq. ft. for six inch (6") depth of soil.
2. Soil Reaction: State the recommended liming rates for raising pH or sulfur for lowering pH according to the buffered acidity or buffered alkalinity in weight per one thousand (1,000) sq. ft. for six inch (6") depth of soil.

1.6 DELIVERY, STORAGE, AND HANDLING

A. Packaged Materials: Deliver packaged materials in original, unopened containers showing weight, certified analysis, name and address of manufacturer, and compliance with State and Federal laws if applicable.

B. Bulk Materials:
1. Do not dump or store bulk materials near structures, utilities, walkways and pavements, or on existing turf areas or plants.
2. Provide erosion-control measures to prevent erosion or displacement of bulk materials, discharge of soil-bearing water runoff, and airborne dust reaching adjacent properties, water conveyance systems, or walkways.
3. Do not move or handle materials when they are wet or frozen.
4. Accompany each delivery of bulk fertilizers and soil amendments with appropriate certificates.

C. Notify Project Manager of delivery schedule in advance so material can be inspected upon arrival at the project site. Immediately remove unacceptable material from the project site.

1.7 PROJECT/SITE CONDITIONS

A. General: Do not perform work when climate and existing site conditions will not provide satisfactory results.

B. Vehicular site access shall be limited to the area(s) indicated on the Contract Drawings or as defined by the Project Manager.

C. Damage to turf, natural areas, pavements, irrigation systems, underground utilities, and other improvements shall be repaired by the contractor at no additional cost to the City.

PART 2 - PRODUCTS

2.1 MATERIALS

A. Topsoil: Shall be as specified under Division 32 Section “Topsoil”.

B. Soil Amendments:
1. In general, turf and planting areas shall receive Soil Amendments unless otherwise noted or specified by the Project Manager. For the purpose of bidding, the Contractor shall assume all areas to receive soil amendments will be at four (4) cubic yards per one thousand (1,000) square feet. Once soils tests have been received and determination is made on the proper amount to be added the site specific soils the rate to be applied may be adjusted per the price based on the Schedule of Values for Soil Amendment.
2. Composted material shall consist of aged organic matter, free of weed or other noxious plant seeds, lumps, stones, or other foreign contaminants harmful to plant life, and having the following characteristics based on a nutrient test performed no longer than 3 months prior to its incorporation into the project:
    a. Organic matter: twenty-five (25%) percent maximum.
    b. Salt content: Five (5.0) mmhos/cm maximum.
    c. pH: 7.5, maximum.
    d. Carbon to nitrogen ratio shall be less than 20:1.
3. Mountain peat, aspen humus, gypsum and sand will not be accepted.
4. Acceptable product: Class I compost, such as Ecogro or Bio-comp, as produced by A1 Organics, Eaton, CO, or approved equal.

C. Soil Conditioners:
1. In general, native seed areas shall receive Soil Conditioners unless otherwise noted or specified by the Project Manager. For the purpose of bidding the contractor shall assume the products listed below will be applied at the rate specified by the manufacturer for each planting type identified in the Construction Documents. Once soils tests have been received and a determination is made on the proper amount to be added to the site specific soils, the rate to be applied may be adjusted per the price based on the Schedule of Values for Soil Conditioner.
    a. Organic slow release fertilizer (6-1-1), acceptable product: “Biosol” or approved equal.
    b. Granular Humic Acid soil conditioner, acceptable product: “Menefee Humate Soil Conditioner”.
    c. Mycorrhizal Fungi: Dry, granular inoculant containing at least 5300 spores per lb (0.45 kg) of vesicular-arbuscular mycorrhizal fungi and 95 million spores per lb (0.45 kg) of ectomycorrhizal fungi, thirty-three percent (33%) hydrogel, and a maximum of five and one half percent (5.5%) inert material.
    d. Mycorrhizal Inoculant: AM-120, as manufactured by Reforestation Technologies International, locally available from Pawnee Buttes Seed, Greeley, CO, (970)356-7002.

e. Acceptable substitution.

2.2 FERTILIZER

A. General: Fertilizer shall conform to applicable State fertilizer laws. It shall be uniform in composition, dry, and free flowing, and shall be delivered to the site in the original, unopened containers, each bearing the manufacturer's guaranteed analysis. Fertilizer that has become caked or damaged will not be accepted.

B. Turf Grass Lawns: Diamonium phosphate (18-46-0). Nitrogen shall be composed of sulphur-coated Urea only. Provide in sufficient quantity to apply at the rate of one hundred (100) pounds nitrogen per acre, unless otherwise indicated by the soils tests.

C. Native Grass Areas: Fertilizer shall only be applied as specified in Soil Conditioners.

2.3 PESTICIDE

A. Post Emergent Pesticide: Roundup (Glyphosate) as manufactured by Monsanto Company, or approved equal.

PART 3 - EXECUTION

3.1 EXAMINATION

A. General: Verify that existing site conditions are as specified and indicated on the Contract Drawings before beginning work under this Section.

B. Grades: Inspect to verify rough grading is within +/- one tenth of one foot (0.1') of grades indicated and specified.

C. Verify that no foreign or deleterious material or liquid such as paint, paint washout, concrete slurry, concrete layers or chunks, cement, plaster, oils, gasoline, diesel fuel, paint thinner, turpentine, tar, roofing compound, or acid has been deposited in soil within the work area.

D. Unsatisfactory Conditions: The General Contractor shall notify the Project Manager in writing of any known unsatisfactory site conditions. If the soil is found to be unfit to support planting as described above, it is to be removed and replaced with clean soil from a source approved by the Project Manager.

E. Beginning of soil preparation work means acceptance of existing conditions by the installer.

3.2 PREPARATION

A. Locate all utilities (sewer, water, irrigation, gas, electric, phone, and other conduits and subsurface equipment) prior to commencing work.

B. Contractor shall be responsible for the protection of all new and existing infrastructure, and repair of any damages caused by work under this section, at no cost to the Owner.

C. Weed Seed Eradication: Perform pesticide treatment over the entire area to be planted. Allow sufficient time to successfully complete the entire pesticide treatment process (germinate / terminate) before proceeding with planting.
   1. Pesticide treatment must be completed during the growing season.
   2. Water surface one half (1/2") inch per week for two weeks prior to application if natural precipitation does not supply this amount to encourage weed seed germination.
   3. Notify Project Manager forty-eight (48) hours in advance of each pesticide treatment.
   4. Apply pesticide in accordance with manufacturer's recommendations.
   5. Water surface one half (1/2") inch per week if natural precipitation does not supply this amount to encourage weed seed germination.
   6. Fourteen (14) days after the first pesticide application, review surface for evidence of plant growth.
   7. If there is no evidence of plant growth, obtain Project Manager approval of surface conditions to proceed with Soil Preparation.
   8. If more than 10% of the area to be planted contains new plant growth, the pesticide and watering application shall be repeated until new plant growth is satisfactorily eradicated.
   9. Remove plant debris from treated area.

D. Areas of Compacted Topsoil: Areas within the work limits, or as defined on Contract Drawings or by the Project Manager, that have vegetation that is sparse, stunted, anemic, weedy or was used as construction staging, a parking area, and/or subjected to heavy use will require ripping to prepare the soil for planting. Scarify compacted soil to an eight-inch (8") minimum depth to loosen topsoil.

E. Areas of Disturbed Topsoil: Areas disturbed but not severely compacted, as determined by the Project Manager, shall be deep tine aerated or shattered to prepare the soil for revegetation.

F. Areas of Undisturbed Natural Topsoil: Undisturbed sites that are or were supporting healthy plant growth need only surface seedbed preparation prior to sowing seed.

3.3 INSTALLATION

A. Install topsoil as required in Division 31 section "Earth Moving" and Division 32 Section "Topsoil".

B. Timing: Perform soil preparation just prior to planting operations and in accordance with final planting schedule. Coordinate with irrigation system installation to avoid damage.

C. Soil Preparation in Turf Grass and Planting Bed Areas:
   1. Apply Soil Amendments at the following rates:
      a. Soil Amendments: Bid quantity to be four (4) cubic yards per one thousand (1,000) square feet, or per soil test recommendations.
      b. Fertilizer: Diamonium phosphate, Bid quantity to be two (2) pounds of nitrogen per one thousand (1,000) square feet. Apply per manufactures recommendations for the type of planting area, or per soil test recommendations.
      c. Mycorrhizal inoculants: Apply per manufacturer's instructions and quantities appropriate to the planting type.
   2. After applying Soil Amendments, thoroughly till area to depth of six inches (6") minimum by plowing, rototilling, harrowing, or disking until soil is well pulverized and thoroughly mixed. Soil Conditioners and Fertilizer shall be applied topically once final grade has been established and just prior to sodding or seeding.

3. Take soil samples, in similar locations to pre-construction testing, and test amended soil to ensure the final product meets the laboratory recommendations prior to planting.

D. Soil Preparation in Native Grass Areas:
1. Soil Conditioners: Apply per manufactures recommendations for the type of planting area, or per soil test recommendations.
2. Mycorrhizal inoculants: Apply per manufacturer's instructions and quantities appropriate to the planting type.
3. Thoroughly till the area to depth of six inches (6") minimum by plowing, rototilling, harrowing, or disking until soil is well pulverized and thoroughly mixed.
4. Take soil samples, in similar locations to pre-construction testing, and test amended soil to ensure the final product meets the laboratory recommendations prior to planting.

E. Fine Grading in all Landscape Areas:
1. Complete fine grading for all areas prior to seeding or planting. Allow for natural settlement.
2. For ground surface areas surrounding buildings to be landscaped, maintain required positive drainage away from buildings.
3. Establish finish grades to within plus or minus one tenth (0.10') foot of grades indicated, in order to prevent "bird-baths" or ponding.
4. Finish grade shall be below edge of pavement prior to sodding, seeding or planting.
   a. Sodded Areas: Allow one and one half inches (1-1/2") for sod.
   b. Seeding Areas: Allow one inch (1") for seed.
   c. Planting Beds: Allow four inches (4") for mulch.
5. Compaction of Surface Grade Prior to Landscape Installation: Firm, but not hard, eighty five percent (85%) standard Proctor density within two percent (2%) optimum moisture.
6. Turfgrass Lawn Areas: Prior to acceptance of grades, hand rake to smooth, even surface, free of debris, clods, rocks and organic matter greater than one inch (1").
7. Native Seed Areas: Area shall not be graded smooth but left in a rough condition after tilling. Tilling shall occur parallel to the contours only.
8. Restore planting areas to specified condition if eroded or otherwise disturbed after fine grading and prior to planting.

3.4 CLEANING

A. Protect areas adjacent to soil preparation and planting areas from contamination. Keep adjacent paving and construction clean and work area in an orderly condition.

B. Remove debris and excess materials from site. Clean out drainage inlet structures. Clean paved and finished surfaces soiled as a result of work under this Section, in accordance with Section 208 of the General Specifications or as directed by the Project Manager.

3.5 PROTECTION

A. Provide and install barriers as required and as directed by Project Manager to protect completed areas against damage from pedestrian and vehicular traffic until acceptance by the City.

B. Protect areas of in-place soil from additional compaction, disturbance, and contamination. Prohibit the following practices within these areas except as required to perform planting operations:
1. Storage of construction materials, debris, or excavated material.

2. Parking vehicles or equipment.
3. Vehicle traffic.
4. Foot traffic.
5. Erection of sheds or structures.
6. Impoundment of water.
7. Excavation or other digging unless otherwise indicated.

C. If prepared soil or subgrade is disturbed or contaminated prior to planting, the Contractor shall restore or replace the planting soil as directed by Project Manager at no cost to the Owner.

3.6 ACCEPTANCE

A. Inspection: Provide notice to the Project Manager requesting inspection at least seventy-two (72) hours prior to anticipated date of completion.

B. Contractor shall be responsible for coordinating soil preparation inspections with Denver Water, call (303) 628-6682 at least seventy-two (72) hours prior to installing sod, seed, or landscape plantings.

C. Deficiencies: The Project Manager will specify deficiencies to the Contractor who shall make satisfactory adjustments and shall again notify Project Manager for final inspection.

PART 4 - MEASUREMENT AND PAYMENT

4.1 MEASUREMENT

A. Measurement will be based on the percentage complete for the lump sum contract amount for Soil Preparation.

4.2 PAYMENT

A. Payment will be made at the lump sum contract price, and shall include required materials, transportation, equipment, labor, earthwork, stockpiling, disposing, hauling off, watering, dust control, erosion and sediment control, fine grading, as required in accordance with the Contract Drawings and Specifications.

END OF SECTION 32 91 13

SECTION 32 91 20 TOPSOIL

PART 1 - GENERAL

1.1 RELATED DOCUMENTS

A. Contract Drawings and general provisions of the Contract, including General and Supplementary Conditions and Division 01 Specification Sections, apply to this Section.

B. Requirements described in the Materials Management Plan (MMP), prepared by Pinyon Environmental, dated May 12, 2018 apply to this section. (See Appendix)

C. Requirements described in the Project Specific Regulated Asbestos Contaminated Soil Materials Plan (PSMP), prepared by Pinyon Environmental Inc, dated March 1, 2018 apply to this section. (See Appendix)

1.2 SUMMARY

A. This Section includes requirements for furnishing, stockpiling, and placing topsoil on a previously prepared subgrade.

B. Related Sections:
1. Division 01 Section “Erosion and Sedimentation Control”.
2. Division 31 Section “ Earth Moving”
3. Division 32 Section “Soil Preparation”.
4. Division 32 Section “Turfgrass Seeding”.
5. Division 32 Section “Native Seeding”.
6. Division 32 Section “Sodding”.
7. Division 32 Section “Trees, Plants, and Groundcovers”.

1.3 DEFINITIONS

A. Duff Layer: The surface layer of native topsoil that is composed of mostly decayed leaves, twigs, and detritus.

B. Finish Grade: Elevation of finished surface of planting soil.

C. Manufactured Topsoil: Soil produced off-site by homogeneously blending mineral soils or sand with stabilized organic soil amendments to produce topsoil or planting soil.

D. Pesticide: A substance or mixture intended for preventing, destroying, repelling, or mitigating a pest. This includes insecticides, miticides, herbicides, fungicides, rodenticides, and molluscicides. It also includes substances or mixtures intended for use as a plant regulator, defoliant, or desiccant.

E. Planting Area: Areas to be planted.

F. Planting Soil: Standardized topsoil; existing, native surface topsoil; existing, in-place surface soil; imported topsoil; or manufactured topsoil that is modified with soil amendments and perhaps fertilizers to produce a soil mixture best for plant growth.

G. Subgrade: Surface or elevation of subsoil remaining after excavation is complete, or the top surface of a fill or backfill before planting soil is placed.

H. Subsoil: All soil beneath the topsoil layer of the soil profile, and typified by the lack of organic matter and soil organisms.

I. Surface Soil: Soil that is present at the top layer of the existing soil profile at the Project site. In undisturbed areas, the surface soil is typically topsoil; but in disturbed areas such as urban environments, the surface soil can be subsoil.

1.4 SUBMITTALS

A. See Division 01 Section "Submittals" for submittal requirements.

B. Soil Analysis Report: As indicated in Article 1.5 "Quality Control", below.

1.5 QUALITY CONTROL

A. Existing On-Site Topsoil:
1. All topsoil shall be removed and disposed of in accordance to the Materials Management Plan and the Project Specific Regulated Asbestos Contaminated Soil Materials Plan. No on-Site Topsoil shall be re-used.

B. Imported Topsoil:
1. Submit source location for topsoil to be imported to site for approval by Project Manager.
2. Submit soil analysis report for topsoil imported to site, from the State University Agricultural Extension Service or other approved soil testing laboratory. Report shall cover soil textural classification (percentages of sand, silt, and clay), pH, percentage organic matter, and soluble salts (electric conductivity in millimos/centimeter), and shall include additive recommendations.
    a. One 1-quart sample per five hundred (500) cubic yards of imported soil is required, with individual tests completed for each sample.
    b. Follow instructions from soil testing laboratory when collecting samples.
3. Testing will be at the expense of the Contractor.
4. Submit a one (1) quart sample along with analysis results.

C. Manufactured Topsoil:
1. Submit source of manufactured topsoil to be imported to site for approval by Project Manager.
2. Submit soil analysis report for stockpiled on-site topsoil from the State University Agricultural Extension Service or other approved soil testing laboratory. Report shall cover soil textural classification (percentages of sand, silt, and clay), pH, percentage organic matter, and soluble salts (electric conductivity in millimos/centimeter).
    a. Test is to be completed within sixty (60) days preceding delivery to site. Report shall cover soil textural classification (percentages of sand, silt, and clay), pH, percentage organic matter, and soluble salts (electric conductivity in millimos/centimeter).
    b. Submit a one (1) quart sample along with analysis results.

1.6 DELIVERY, STORAGE, AND HANDLING

A. Do not deliver or place topsoil in a frozen, wet, or muddy condition.

B. Protect stored and placed topsoil from vehicular traffic, equipment storage, material storage, or from contaminants or pollution sources. Topsoil that is compacted or tainted during construction is to be removed from site and disposed of at a licensed landfill at no additional cost to the City.

PART 2 - PRODUCTS

2.1 ON-SITE TOPSOIL

A. All topsoil shall be removed and disposed of in accordance to the Materials Management Plan and the Project Specific Regulated Asbestos Contaminated Soil Materials Plan. No on-Site Topsoil shall be re-used.

2.2 IMPORTED TOPSOIL

A. All topsoil shall be a loam or sandy loam conforming to ASTM D 5268. At least ten (10) days prior to topsoil delivery, notify Project Manager of the source(s) from which topsoil is to be furnished. Topsoil shall be furnished by the Contractor and shall be a natural, friable soil representative of productive soils and shall meet the following conditions.

B. It shall be obtained from the top six-inches (6") of well drained areas.

C. Fertile, friable, loamy soil, reasonably free from subsoil, refuse, roots, heavy or stiff clay, stones larger than one-inch (1"), coarse sand, noxious seeds, sticks, brush, litter, and other deleterious substances; suitable for the germination of seeds and the support of vegetative growth. The pH value shall be between 6.5 and 7.5.

D. Soil Texture:
1. Sand: thirty percent (30%) – fifty percent (50%)
2. Silt: thirty percent (30%) – fifty percent (50%)
3. Clay: five percent (5%) – thirty percent (30%)

E. Additives: As determined by soil fertility tests.

F. Percent Organic Content:
1. Turf grass shall be three percent (3%) maximum after amending or conditioning.
2. Native grass shall be one percent (1%) maximum after amending or conditioning.

G. Soluble Salts: Electric conductivity (EC) shall be less than two (2.0) mmhos/cm for turfgrass areas, dryland areas, and planting beds.

2.3 MANUFACTURED TOPSOIL

A. "Amended Topsoil" as manufactured by A1 Organics, 16350 WCR 76, Eaton, CO 80615 Ph: (970) 454-3492, (800) 776-1644 Fax: (970) 454-3232 www.a1organics.com, or substitution as approved by Project Manager.

PART 3 - EXECUTION

3.1 EXAMINATION

A. Examine areas where the Work of this Section will be performed for compliance with requirements and conditions affecting installation and performance.

1. Verify that no foreign or deleterious material or liquid such as paint, paint washout, concrete slurry, concrete layers or chunks, cement, plaster, oils, gasoline, diesel fuel, paint thinner, turpentine, tar, roofing compound, or acid has been deposited in soil within the work area.
2. Verify that final grades are completed in accordance with the Contract Drawings.

B. Proceed with installation only after unsatisfactory conditions have been corrected and approved by Project Manager.

3.2 PLACING TOPSOIL

A. Scarify compacted subgrade to a six-inch (6”) depth to bond topsoil to subsoil. Place topsoil to a minimum depth of six-inches (6”) after settlement. Topsoil shall be free from weeds, sod, and material larger than 1-inch (1”), toxic substances, litter or other deleterious material. Spread evenly and grade to elevations and slopes shown on Contract Drawings. Hand rake areas inaccessible to machine grading.

B. All topsoil shall be removed and disposed of in accordance to the Materials Management Plan and the Project Specific Regulated Asbestos Contaminated Soil Materials Plan. No on-Site Topsoil shall be re-used. Contractor shall furnish and install imported topsoil in the manner described above.

C. Utilize manufactured topsoil as the top layer, placing over scarified subgrade to a depth of six-inches (6”).

3.3 PROTECTION AND REPAIR

A. Protect completed areas where topsoil has been spread from traffic which will compact the soil volume. Any areas that, as determined by Project Manager, become compacted due to Contractor’s construction traffic shall be reconstructed to specified requirements and approved by Project Manager.

PART 4 - MEASUREMENT AND PAYMENT

4.1 MEASUREMENT

A. On-Site Stockpiled Topsoil: Measurement will be based on the percentage complete for the lump sum contract amount for Topsoil.

B. Imported Topsoil: Measurement will be based on the percentage complete for the lump sum contract amount for Topsoil.

4.2 PAYMENT

A. Payment will be made at the lump sum contract price, and shall include required materials, transportation, equipment, labor, earthwork, stripping, stockpiling and placing of topsoil, loading, transporting, re-transporting to new locations (from onsite or off site stockpiles) spreading to specified depth disposing of unusable materials, hauling off, watering, dust control, erosion and sediment control, finish grading, required to bring the site to the required lines and grades as required in accordance with the Contract Drawings and Specifications.

END OF SECTION 32 91 20

SECTION 32 92 20 NATIVE SEEDING

PART 1 - GENERAL

1.1 RELATED DOCUMENTS

A. Contract Drawings and general provisions of the Contract, including General and Supplementary Conditions and Division 01 Specification Sections, apply to this Section.

1.2 SUMMARY

A. This Section includes requirements for the installation of native seed, mulch, erosion control material (if applicable), and maintenance of the seeded areas, to be achieved as outlined in the "Maintenance" section below.

B. Related Sections:
1. Division 01 Section "Erosion and Sedimentation Control".
2. Division 01 Section "Tree Retention and Protection".
3. Division 31 Section "Earth Moving".
4. Division 31 Section "Watering".
5. Division 32 Section "Irrigation System".
6. Division 32 Section "Soil Preparation".
7. Division 32 Section "Topsoil".
8. Division 32 Section "Trees, Plants, and Groundcovers".

1.3 DEFINITIONS

A. Finish Grade: Elevation of finished surface of planting soil.

B. Pesticide: A substance or mixture intended for preventing, destroying, repelling, or mitigating a pest. This includes insecticides, miticides, herbicides, fungicides, rodenticides, and molluscicides. It also includes substances or mixtures intended for use as a plant regulator, herbicide, defoliant, or desiccant.

C. Pests: Living organisms that occur where they are not desired or that cause damage to plants, animals, or people. These include insects, mites, grubs, mollusks (snails and slugs), rodents (gophers, moles, and mice), unwanted plants (weeds), fungi, bacteria, and viruses.

D. Planting Soil: Standardized topsoil; existing, native surface topsoil; existing, in-place surface soil; imported topsoil; or manufactured topsoil that is modified with soil amendments and perhaps fertilizers to produce a soil mixture best for plant growth.

E. Subgrade: Surface or elevation of subsoil remaining after excavation is complete, or top surface of a fill or backfill before planting soil is placed.

F. Subsoil: All soil beneath the topsoil layer of the soil profile, and typified by the lack of organic matter and soil organisms.

G. Surface Soil: Soil that is present at the top layer of the existing soil profile at the Project site. In undisturbed areas, the surface soil is typically topsoil, but in disturbed areas such as urban environments, the surface soil can be subsoil.

H. Weeds: Including but not limited to Puncturvine, Field Bindweed, Twitch, Dandelion, Jimsonweed, Diffuse, Spotted and Russian Napweed, Quackgrass, Horsetail, Morning Glory, Rush Grass, Mustard, Lambsquarter, Chickweed, Cress, Crabgrass, Canada Thistle, Nutgrass, Blackberry, Tansy Ragwort, Bermuda Grass, Johnsongrass, Poison Ivy, Nut Sedge, Nimble Weed, Bent Grass, Garlic Mustard, Perennial Sorrel, and Broom Grass or any weed listed on Colorado Noxious Weed List and Watch List.

1.4 REFERENCES

A. Comply with U.S. Department of Agriculture Rules and Regulations under the Federal Seed Act and be equal to or better in quality than the standards for Certified Seed.

B. Colorado Department of Transportation (CDOT) – Standards Specifications for Road and Bridge Construction.

1.5 SUBMITTALS

A. See Division 01 Section “Submittals” for submittal requirements.

B. Materials: The Contractor shall submit to the Project Manager for approval a complete list of all materials to be used during this portion of the work prior to delivery of any materials to the site. Include complete data on source, amount and quality. This submittal shall in no way be construed as permitting substitution for specific items described on the plans or in these specifications unless approved in writing by the Project Manager.
   1. Certification of Seed: From seed vendor for each seed monostand or mixture stating the botanical and common name, percentage by weight of each species and variety, and percentage of purity, germination, and weed seed. Include the year of production and date of packaging.
   2. Native Grass Species (supplied as pure live seed): Submit lab germination test results for all grass species. Submit an affidavit that describes estimated purity for all forb species that are not typically tested.
   3. Pesticides: Include product label and manufacturer's application instructions specific to this Project.
   4. Product Certificates: For soil amendments and fertilizers, from manufacturer.

C. Qualification Data: For qualified landscape Installer.

D. Material Test Reports: For existing in-place surface soil.
   1. Soil Analysis: See Division 32 Section “Soil Preparation”
   2. Analysis for each soil amendment.
   3. Analysis for each amended planting soil.

E. Analysis and standards: Wherever applicable, for non-packaged materials, provide two copies of analysis by recognized laboratory made in accordance with methods established by the Association of Official Agriculture Chemists.

F. Seeding schedule: Submit, in writing, two (2) copies of proposed seeding schedule, indicating dates for site preparation, seeding, mulching, erosion control, and coordination with plant procurement, planting soil preparation, plant delivery and planting. Schedule all Work during specified planting seasons. Once accepted, revise dates only as approved in writing, after documentation of reasons for delays.

G. Maintenance Instructions: Recommended procedures for maintenance of irrigated and non-irrigated native seed areas during a calendar year. Submit before expiration of required initial maintenance periods.

H. Contract Closeout Submittals:
   1. Operating and Maintenance Data: At completion of work, submit one (1) digital copy and two (2) hard copies to the Project Manager in accordance with Division 01 Section "Contract Closeout". Include directions for irrigation, aeration, mowing, fertilizing, and spraying as required for continued and proper maintenance through full growing season and dormant period.
   2. Warranty for Native Seed Areas: At completion of work, furnish written warranty to Parks Project Manager based upon specified requirements.

I. The Project Manager reserves the right to reject the seed at any time prior to acceptance and that fails to meet specification requirements. Promptly remove rejected seed from the site.

1.6 QUALITY CONTROL

A. Installer Qualifications: A qualified landscape Installer whose work has resulted in successful native grass establishment.
   1. Experience: Five years' experience in native seed installation in addition to requirements in Division 01 Section "Quality Control".
   2. Installer's Field Supervision: Require Installer to maintain an experienced full-time supervisor on Project site when work is in progress.
   3. Personnel Certifications: Installers shall have certification the following categories from the NALP:
      a. Landscape Industry Certified Technician - Exterior, with installation maintenance irrigation specialty area(s).
   4. Maintenance Proximity: Not more than two hours' normal travel time from Installer's place of business to Project site.
   5. Pesticide Applicator: State licensed, commercial.

B. Soil-Testing Laboratory Qualifications: An independent laboratory or university laboratory, recognized by the State Department of Agriculture, with the experience and capability to conduct the testing indicated and that specializes in types of tests to be performed.

C. Pre-installation Conference: Conduct conference at Project site to coordinate the process with other trades, to coordinate equipment movement within planting areas and to avoid soil compaction, to review proposed methods of installation, performance criteria, and maintenance procedures. Review underground utility location maps and plans. This meeting shall be coordinated by the Contractor, and comply with requirements in Division 01.

D. Standards: All materials and methods used during this portion of the work shall meet or exceed applicable federal, state, county, and local laws and regulations. All seed shall be free from insects and disease. Species shall be true to their scientific name as specified.

1.7 DELIVERY, STORAGE, AND HANDLING

A. Seed: Shall be furnished in bags or containers clearly labeled to show the name and address of the supplier, the seed name, the lot number, net weight, origin, the percent of weed seed content, the guaranteed percentage of purity and germination, pounds of pure live seed (PLS) of each seed species, and the total pounds of PLS in the container. Seed that has become wet, moldy or damaged in transit or in storage will not be acceptable.

B. Other Packaged Materials: Deliver packaged materials in original unopened containers bearing weight, analysis and name of supplier.

C. Fertilizer: Deliver organic or chemical fertilizer to site in original unopened container bearing manufacturer's guaranteed chemical analysis, name, trade name, trademark and conformance to state law, and bearing name and warranty of producer.

D. Bulk Materials:
1. Do not dump or store bulk materials near structures, utilities, walkways and pavements, or on existing turf areas or plants.
2. Provide erosion-control measures to prevent erosion or displacement of bulk materials, discharge of soil-bearing water runoff, and airborne dust reaching adjacent properties, water conveyance systems, or walkways.
3. Accompany each delivery of bulk fertilizers and soil amendments with appropriate certificates.
4. Seed: Deliver seed materials in original unopened containers, showing bearing weight, analysis and name of supplier.
5. Fertilizer: Deliver inorganic or chemical fertilizer to site in original unopened container bearing manufacturer's guaranteed chemical analysis, name, trade name, trademark and conformance to state law, and bearing name and warranty of producer.

E. Material will be inspected upon arrival at project site. Project Manager will reject any opened or unacceptable materials as described above. Store all materials in a manner to prevent wetting and deterioration.

F. Immediately remove unacceptable material from job site.

1.8 PROJECT/SITE CONDITIONS

A. Work scheduling: Proceed with and complete landscape work rapidly, as portions of the site become available, working within the specified planting season and approved schedule.

B. Planting Restrictions: Planting is preferred in spring but may be performed during one of the periods noted below. Variance from the schedule shall be permitted only with written approval from the Project Manager. Coordinate planting periods with initial maintenance periods to provide required maintenance from date of Substantial Completion**.**

C. Vehicular accessibility on site shall be as directed by Project Manager. Repair damage to prepared topsoil and existing surfaces, caused by vehicular access and movement during work under this section, to original condition at no additional cost to the City.

D. Do not drill or sow seed during windy, rainy weather or when ground is frozen or otherwise unable to be tilled.

E. Seeding Season: Seeding shall generally occur during the specified windows below. Seeding dates may be modified when temperature and moisture conditions are favorable. Verify with local producers and contractors prior to finalizing.

Seed Type	Irrigated Areas Only	Non-Irrigated Areas
Native Grasses	April 15-Sept.1	November 15-April 15

1. Dormant Seeding: Upon approval of the Project Manager, dormant seeding for Irrigated and Non-irrigated areas may be accomplished between November 15 and April 15. No seeding shall be done when the ground is frozen, muddy, covered with snow, or otherwise in a condition unsuitable for seeding. Dormant seeding will not relieve the Contractor from the warranty or the acceptance requirements specified elsewhere in this specification.

F. Existing conditions:
1. Existing Plants: Install sod only after all other landscape and irrigation items have been installed and accepted by the Project Manager.
2. Utilities: Determine location of underground utilities. Perform work in a manner to avoid possible damage. Hand excavate, as required.
3. Excavation: Maintain grade stakes set by others until removal is mutually agreed upon by parties concerned. When conditions detrimental to plant growth are encountered, such as rubble fill, adverse drainage conditions, noxious materials or obstructions, notify Project Manager before planting.
4. If weeds are present on site, treat with pesticide prior to preparing soil for installing seed or sod as specified below.

G. Coordination:
1. Coordinate with construction of utilities on site. Do not begin placing topsoil until underground work is completed in the area.
2. Coordinate with seeding and landscape Contractor(s) approved schedule. Limit construction access to areas where topsoil has been placed if placement is completed more than three (3) days prior to commencement of landscaping in the area. Limit fine grading to areas that can be prepared for planting within twenty-four (24) hours after fine grading.
3. Coordinate with Contractors work requiring access to site over seeded areas.
4. Coordinate with installation of underground irrigation system.

PART 2 - PRODUCTS

2.1 MATERIALS

A. Topsoil: See Division 32 Section “Topsoil”.

B. General:
1. The selected seed mix must be approved by the City Naturalist, and the Project Manager prior to its incorporation into the project.
2. All seed brands shall be free from Colorado prohibited noxious weed seeds, including but not limited to Canada Thistle, Field Bindweed, Johnsongrass, and Leafy Spurge. The Contractor shall furnish to the Project Manager a signed statement certifying that the seed

is from a lot that has been tested by a recognized laboratory for seed testing within six months prior to the date of delivery.

3. Computation for quantity of seed required on the project is based on Pure Live Seed (PLS).
4. The formula used for determining the quantity of PLS shall be:
   Pounds of Seed x (Purity x Germination) = Pounds of PLS.
5. If seed available on the market does not meet the minimum purity and germination specified, the Contractor must compensate for a lesser percentage of purity or germination by furnishing sufficient additional seed to equal the specified product. Product comparison shall be made on the basis of PLS in pounds, stated on each seed bag.

C. Seed Mixes:

1. Short Grass Mix- Apply in Areas Labeled "Native Seed" on Plans, between Arkins Court and River:

Common Name	**Scientific Name**	**PLS lbs/ ac**	**PLS/sf**	**% of PLS/sf**
Blue Grama	Bouteloua gracilis	2.0	36	28.00
Bottlebrush Squirreltail	Elymus elymoides	2.0	9	6.82
Buffalograss	Buchloe dactyloides	10.8	12	9.18
Green Needlegrass	Nassella viridula	1.4	6	4.33
Prairie Junegrass	Koeleria cristata	0.5	22	17.22
Sand Dropseed	Sporobulus cryptandrus	0.1	10	7.82
Sideoats Grama	Bouteloua curtipendula	4.9	21	16.45
Western wheatgrass	Pascopyrum smithii	4.3	13	10.18
		26.1	130	100.00

Drill Seeded Rate: 26.1 PLS#/Acre
Mechanical Broadcast Rate: 26.1 PLS#/Acre
Hand Broadcast Areas Rate: 52.2 PLS#/Acre

2. Riparian Mix- use in Water Quality Ponds hatched "Riparian Seed Mix" in Plans:

Common Name	Scientific Name	Lb. of PLS/AC	Percent of Mix
Baltic Rush	**Juncus balitcus**	2.1	2.2%
Black-Eyed Susan	*Rudbeckia hirta*	3.1	7.8%
Bottlebrush squirretail	*Sitanion hystrix*	4.4	15%
Gaillardia - annual	*Gaillardia pulchella*	2.2	2.8%
Indian Ricegrass	*Oryzopsis hymenoides*	3.9	12.2%
Plains Coreopsis	*Coreopsis tinctoria*	2.4	3.9%
Prairie Coneflower	*Ratibida columnifera*	2.4	3.9%
Switchgrass	*Panicum virgatum*	3.9	12.2%
Tufted Hair Grass	*Deschampsia cespitosa*	4.4	15%
Western Wheatgrass	*Pascopyrum smithii*	5.3	20%
	Totals	34.1 Lbs/PLS	100%

Drill Seeded Rate: 34.1 PLS#/Acre
Mechanical Broadcast Rate: 34.1 PLS#/Acre
Hand Broadcast Areas Rate: 68.2 PLS#/Acre

D. Mulch: Comply with Section 213 – Mulching of the CDOT Standards and Specifications for Road and Bridge Construction.

E. Fertilizer: None required unless otherwise specified by soils test.

F. Water: Contractor to utilize the existing irrigation system and or quick coupler(s) when available. If irrigation or quick coupler(s) are not available then the contractor is responsible for watering. Water shall be free of substances that may be harmful to seed growth. Hoses and other watering equipment necessary to water the seed to be furnished by Contractor.

G. Tackifier: Comply with Section 213 – Mulching of the CDOT Standards and Specifications for Road and Bridge Construction.

2.2 PESTICIDES

A. General: Pesticide, registered and approved by EPA, acceptable to authorities having jurisdiction, and of type recommended by manufacturer for each specific problem and as required for Project conditions and application. Do not use restricted pesticides unless authorized in writing by Project Manager and authorities having jurisdiction.

B. Pre-Emergent Herbicide (Selective and Non-Selective): “Journey” by BASF, or approved equal.

C. Post-Emergent Broadleaf Herbicide: “Plateau” by BASF, or approved equal.

2.3 EROSION-CONTROL MATERIALS

A. Erosion-Control Blankets: Biodegradable wood excelsior, straw, or coconut-fiber mat enclosed in a photodegradable plastic mesh. Include manufacturer's recommended steel wire staples, 6inches long.

B. Erosion-Control Fiber Mesh: Biodegradable burlap or spun-coir mesh, a minimum of 0.92 lb/sq. yd., with 50 to 65 percent open area. Include manufacturer's recommended steel wire staples, 6 inches (6”) long.

C. Erosion-Control Mats: Cellular, non-biodegradable slope-stabilization mats designed to isolate and contain small areas of soil over steeply sloped surface, of 3 inch (3”) nominal mat thickness. Include manufacturer's recommended anchorage system for slope conditions.
   1. Products: Subject to compliance with requirements, provide one of the following:
      a. Invisible Structures, Inc.; Slopetame 2.
      b. Presto Products Company, a business of Alcoa; Geoweb.
      c. Tenax Corporation - USA; Tenweb.

2.4 SUBSTITUTIONS

A. All substitutions shall be submitted to and approved by the Project Manager prior to construction.

PART 3 - EXECUTION

3.1 EXAMINATION

A. Examine areas to be seeded for compliance with requirements and other conditions affecting performance.
   1. Verify that finished grades are consistent with the slopes and grades indicated on the Contract Drawings. Verify grades are in conformance with Division 31 Section "Earth Moving". Obtain the Project Manager's approval of finished grade prior to proceeding with seeding operations.
   2. Verify soil prepare of all areas to be seeded is in accordance with the requirements of Division 32 Section "Soil Preparation". When completed, the soil shall be firmed by float dragging, followed by steel raking, to provide for the proper seeded surface. The seed bed shall be totally free from rock or clay clods over one inch (1") in diameter.
   3. Verify that no foreign or deleterious material or liquid such as paint, paint washout, concrete slurry, concrete layers or chunks, cement, plaster, oils, gasoline, diesel fuel, paint thinner, turpentine, tar, roofing compound, or acid has been deposited in soil within a seeding area. If contamination is present in soil, remove the soil and contamination as directed by the Project Manager and replace with new soil.

B. Verify that the irrigation system is operable and provides adequate coverage prior to seeding.

C. Proceed with seeding only after unsatisfactory conditions have been corrected and approved by the Project Manager.

D. Acceptance: Beginning of installation means acceptance of existing conditions by the Contractor.

3.2 PREPARATION

A. Notify the Project Manager at least seven (7) working days prior to start of seeding operations.

B. Protect existing utilities, paving, planting and other facilities from damage caused by seeding operations. Contractor shall repair any damage at no additional cost to the City.

C. Locate, protect and maintain the irrigation system during seeding operations. Repair irrigation system components damaged during seeding operations shall be replaced or repaired to current City irrigation standards at Contractor's expense.

D. Utilize equipment having low unit pressure ground contact within seeding areas.

E. Limit preparation to areas that can be seeded within twenty-four (24) hours of preparation.

F. Moisten prepared area before seeding if soil is dry. Water thoroughly and allow surface to dry before seeding. Do not create muddy soil.

G. Erosion Control: Take measures and furnish equipment and labor necessary to control and prevent soil erosion, blowing soil and accumulation of wind-deposited materials on the site throughout the duration of work.

3.3 SEEDING

A. Seed within twenty-four (24) hours after preparation of seed bed. Seeding at other times may only be done if approved by the Project Manager.

B. Areas outside Contract Limits disturbed as a result of construction operations shall be restored at Contractor's expense.

C. Seed shall be uniformly applied at the specified rate, (half in one direction and the other half perpendicular to the first application). The direction of the final application shall always be perpendicular to the slope or running in the direction of the contour. Seed shall be installed at a depth between one-quarter inch (1/4") and one-half inch (1/2").

D. Areas that are too small or steep for mechanical seeding may be hand seeded. Seed shall be uniformly applied at the specified rate utilizing a broadcast spreader and then hand raked in to a depth of no more than one-half inch (1/2"), then roll seed bed to ensure proper contact to the soil.

3.4 EROSION CONTROL MATERIALS

A. Review erosion control measures with the Project Manager prior to installation.

B. For erosion control mats, install planting soil in two lifts, with second lift equal to thickness of erosion control mats. Install erosion control mat and fasten as recommended by material manufacturer.

C. Fill cells of erosion control mat with planting soil and compact before planting.

D. Install erosion control blanket on slopes exceeding 4:1, and in swales or other areas of concentrated runoff. As shown on the Contract Drawings or as directed by the Project Manager. Install in accordance with manufacturer's instructions.

E. For erosion-control blanket or mesh, install from top of slope, working downward, and as recommended by material manufacturer for site conditions. Fasten as recommended by material manufacturer.

3.5 MULCHING

A. Straw Mulch Application: Comply with Section 213 – Mulching of the CDOT Standards and Specifications for Road and Bridge Construction.

B. Hydromulch Application: Utilize an approved hydromulcher to apply cellulose fiber at a rate of two-thousand (2,000) pounds per acre. Apply tackifier to comply with CDOT Section 213.02 – Mulching. Contractor shall provide verification of application rates in the form of ship tickets.

C. Mulching shall not be installed when surface water is present resulting from rain, melting snow, irrigation, or other causes.

D. Areas not properly mulched, or any damage that may occur during construction is the responsibility of the Contractor and shall be repaired and re-mulched in an acceptable manner at

the Contractor's expense. Mulching removed by wind, rain, or other causes prior to acceptance shall be re-established by the Contractor at their own expense.

E. The seeded area shall be mulched within eight (8) hours of seeding. Areas not mulched within twenty-four (24) hours after seeding must be re-prepped and re-seeded with the specified seed mix at the Contractor's expense.

F. Contractor shall remove all hydromulch from surface areas not specified for seeding, including but not limited to plant materials, fences, paved areas, signs, mulch beds, irrigation components and all other objects as directed by the Project Manager.

3.6 CLEANING

A. Perform cleaning during installation of the work and upon completion of the work. Remove from all excess materials, debris and equipment from site. Repair any damage resulting from seeding operations.

B. Erect temporary fencing or barricades and warning signs as required to protect newly planted areas from traffic. Maintain fencing and barricades throughout initial maintenance period and remove after plantings are established.

C. Remove non-degradable erosion-control measures after grass establishment period.

3.7 PROTECTION

A. Restrict vehicular and pedestrian traffic from seeded areas until vegetation is established. Erect signs and barriers as required or directed by the Project Manager at no additional cost to the City.

3.8 MAINTENANCE

A. The maintenance period shall begin at Substantial Completion and continue for the establishment period until Final Acceptance of native seed areas. Final Acceptance of native seeded areas will not be given until the City Naturalist and Project Manager are satisfied with germination and a full stand of grass, in a vigorous growing condition, with consistent and complete coverage in accordance with the specifications. During this time, the contractor shall be responsible for watering, mowing, spraying, weeding, fertilizing and all related work as necessary to ensure that seeded areas are in a vigorous growing condition. Provide all supervision, labor, material and equipment to develop and maintain seeded areas. After Final Acceptance, maintenance shall become the responsibility of the City.

B. Maintain and establish native seed areas by weeding, mowing, trimming, replanting, watering and performing other operations as required to establish healthy, viable turf. Roll, regrade, and replant bare or eroded areas and re-mulch to produce a full coverage stand of grass. Provide materials and installation the same as those used in the original installation.
   1. Fill in as necessary soil subsidence that may occur because of settling or other processes. Replace materials and meadow damaged or lost in areas of subsidence.
   2. In areas where mulch has been disturbed by wind or maintenance operations, add new mulch and anchor as required to prevent displacement.

3. Apply treatments as required to keep meadow and soil free of pests and pathogens or disease. Use integrated pest management practices whenever possible to minimize the use of pesticides and reduce hazards.

C. Watering: All watering shall be done in such a way as to encourage establishment, deep root growth and drought tolerance. See Article 3.4 "Irrigation & Water Management", below.
   1. Watering: Utilize irrigation system to water native seeded areas to obtain establishment of an acceptable grass stand, and to supplement natural moisture levels during dry periods.
      a. Schedule watering to prevent wilting, puddling, erosion, and displacement of seed or mulch. Lay out temporary watering system to avoid walking over muddy or newly planted areas. Obtain approval of Project Manager of irrigation system and schedule proposed for use.
      b. Water native grasses with fine spray at a minimum rate of one-half inch (1/2") per week for six (6) weeks after planting unless rainfall precipitation is adequate.
      c. Do not over-water in a manner which kills drought-tolerant components of the seed mix.

D. Mowing:
   1. Year One: Mowing of native grasses in the first year after seeding should be avoided. If a mowing of native grasses is required obtain the approval from the City Naturalist and Project Manager prior to mowing. If mowing in the first year is allowed then mow only in the early growing season or late in the fall to allow grass seeds to drop. Mowing shall be at a height of six inches (6") to eight inches (8").
   2. Year Two: Mow native grasses in the early spring or late fall to allow desirable grass seeds to drop. Mowing shall be at a height of six inches (6") to eight inches (8"). Control undesirable plant species as necessary by mowing, hand-pulling, selective pesticide application, and/or prescribed burning.
   3. Year Three: Mow native grasses in the early spring or late fall to allow desirable grass seeds to drop. Mowing shall be at a height of six inches (6") to eight inches (8"). Control undesirable plant species as necessary by mowing, hand-pulling, selective pesticide application, and/or prescribed burning.

E. Weed Control:
   1. Weed Control Prior to Initial Installation per Division 32 Section "Soil Preparation".
   2. Weed control shall be done for the duration of the Maintenance and Warranty Period and when weed density meets or exceeds twelve (12) plants per square yard. Weed control shall be completed by one of the following methods:
      a. Clean Cultivation: Clean cultivate using a rod weeder or other approved equipment tilling the ground no more than 2-inches (2") deep. Contractor shall coordinate timing of clean cultivations with the vegetative conditions on the site. Exact timing of cultivations shall be adjusted to control weed germination on the site. It is the responsibility of the Contractor to clean cultivate as necessary to prevent excessive growth of vegetation. Undesirable species shall not be allowed to seed on the site. Bindweed shall not be clean cultivated but removed by pesticide spot applications.
      b. Mowing: Mowing of undesirable species shall be done per the approval of the City Naturalist and Project Manager as a weed control method. Undesirable species shall not be allowed to seed on the site. Avoid distribution of weed seeds by catching all clippings, bagging clippings and removing them from the site.

Existing grass stands to remain shall not be mowed until late fall or early spring to encourage seed drop.

c. Hand Removal: Hand-removal shall include the removal of all above-ground and below-ground stems, roots and flower masses prior to the development of seed.

d. Chemical Control: If necessary, apply to perennial and annual weeds by a licensed applicator trained in plant identification at no additional cost to the City. Obtain Project Manager's approval prior to applying pesticide. Apply per manufacturer's instructions. Contractor is responsible for ensuring seed establishment and that seed is not adversely affected by pesticide applications. Contractor shall use pesticides for specific species as recommended by CSU Agricultural Extension Service or the City Naturalist.

e. Spot Application Chemical Control: Apply pesticide by hand applicator directly to invasive annual and perennial weeds. Allow a minimum two weeks between application and any seeding activities.

F. Reseeding:

1. Evaluate native grass areas every ninety (90) days during the Maintenance and Warranty Period as to success of germination and coverage. Use the following criteria:
   a. Reseed all areas that meet the following conditions:
      1) Areas of bare or dead grass greater than twenty-four inches (24") by twenty-four inches (24") square.
      2) Areas of weed density greater than twelve (12) plants per square foot.
      3) Areas with general density of specified grasses less than twelve (12) plants per square foot.
2. Reseed unacceptable areas as defined above. Reseeding, soil preparation and mulching shall comply with Division 32 Sections "Turfgrass Seeding" and "Soil Preparation". Seed mixes may be revised (% of species) to better suit site conditions. If requested by Project Manager or Denver City Naturalist, mix shall be revised at no additional cost to the Contract. Where drill seeding is not feasible, hand broadcast seed and rake into the soil to achieve 1/4- to 1/2-inch coverage of soil. The seed application rate shall be doubled in all areas where it is mechanically broadcast and quadrupled in areas requiring hand broad casting. Hydroseeding is not allowed.
3. Timing of reseeding shall be as specified herein. Upon the Project Manager's written approval, the Contractor may reseed at a later date mutually agreed upon.

3.9 ACCEPTANCE

A. Substantial Completion shall be granted when the seeded areas have a uniform plant growth establishing over the entire seeded area. Refer to the Contract General Conditions, Title 19 – Substantial Completion of the Work.

B. Final Acceptance will be granted when native seed areas are in a healthy, vigorous growing condition, and for consistency and completion of coverage for a minimum period of one (1) year from date of Substantial Completion or until the Project Manager and City Naturalist are satisfied with germination.

C. Irrigated native seed areas shall be established when the following criteria are met:

1. By the end of the first full growing season after seeding, total vegetation cover including cover crop shall exceed ninety percent (90%) by aerial cover and ten percent (10%) of all species present shall be native.

2. By the end of the first full growing season, seedling from twenty percent (20%) of planted forb species shall be present, only if forbs are specified in the contract.
3. At any time during the contract period no more than ten percent (10%) by aerial cover of the seeded area should be dominated by aggressive exotic species such as, but not limited to, red clover (*Trifolium* spp.), white or yellow sweet clover (*Melilotus* spp.), Canada thistle (*Cirsium arvense*), tall fescue (*Festuca elatior*), field bindweed*(Convolvulus arvensis*) etc.
4. Until Final Acceptance, seeded areas that fail after having been replaced previously, shall be replaced until it meets establishment as required above. Replacement materials shall be identical to those originally specified.
5. Remedial action: If seeded areas greater than ten (10) square feet fail to meet the terms of the guarantee shown above, the Landscape Contractor will develop and submit to the Owner's Representative a remedial action plan that takes into consideration the site goals and specific deficiencies causing the remedial action. Contractor will implement the remedial action plan and submit a report that describes the remedial action taken. If remedial seeding or planting is required, Contractor will not be required to perform additional remedial seeding or planting in the same area for a minimum of two growing seasons. After two growing seasons following the remedial planting, the performance criteria must be met for the second growing season or additional remedial action must be taken. This guarantee remains in effect until all zones meet the third growing season criteria.
6. Seeded areas will not be accepted in parts. Each time any portion or section of the entire seeded area requires replacement or remedial action, the maintenance period shall extend until all seeded areas meet the minimum establishment requirements stated above.
7. All expense incurred including repairs from vandalism for the replacement and or establishment of the seed areas are the responsibility of the Contractor.
8. If seeded in the fall, review for establishment shall be no later than June 15 of the following year.

D. Non-irrigated native seed areas shall be established when the following criteria are met:
1. Total vegetation cover in all zones seeded with cover crop shall exceed fifty percent (50%) by aerial cover and ten percent (10%) of all species present shall be native. Native seed shall be free of weeds, foreign grasses, disease and harmful insects.
2. At any time during the contract period no more than ten percent (10%) by aerial cover of the seeded area should be dominated by aggressive exotic species such as, but not limited to, red clover (*Trifolium* spp.), white or yellow sweet clover (*Melilotus* spp.), Canada thistle (*Cirsium arvense*), tall fescue (*Festuca elatior*), field bindweed*(Convolvulus arvensis*) etc.
3. During the original warranty period, reseed at once with comparable blend/mix, those areas that have failed to achieve a stand of grass or which in the Project Manager's opinion are unhealthy.
4. Reseeding will not be allowed in any season considerable unfavorable for seeding by the Project Manager.
5. Reseed in a manner to achieve quality as originally specified.

PART 4 - MEASUREMENT AND PAYMENT

4.1 MEASUREMENT

A. Measurement will be based on the percentage complete for the lump sum contract amount for Native Seeding.

B. Measurement will be made by the contract unit specified for Native Seeding. Measurement shall include the actual number of units of specified material(s) placed and accepted at the locations shown on the Contract Drawings, or as directed by the Project Manager, and in accordance with the Specifications.

4.2 PAYMENT

A. Payment will be made at the lump sum contract price, and shall include required materials, transportation, equipment, labor, earthwork, stockpiling, disposing, hauling off, watering, dust control, erosion and sediment control, fine grading, furnishing and installation of seeds and mulches installation and maintenance of temporary protection by fencing or other means, watering and all maintenance required until Final Acceptance of the work as required in accordance with the Contract Drawings and Specifications.

END OF SECTION 32 92 20

SECTION 32 92 23 SODDING

PART 1 - GENERAL

1.1 RELATED DOCUMENTS

A. Contract Drawings and general provisions of the Contract, including General and Supplementary Conditions and Division 01 Specification Sections, apply to this Section.

1.2 SUMMARY

A. This Section includes requirements for furnishing and installation of bluegrass sod, and maintenance of sodded areas as outlined in Maintenance Section 1.8.B. until Final Acceptance.

B. Related Sections:
1. Division 01 Section “Erosion and Sedimentation Control”.
2. Division 31 Section “Earth Moving”.
3. Division 31 Section “Watering”.
4. Division 32 Section “Irrigation System”.
5. Division 32 Section “Automatic Irrigation Controllers”
6. Division 32 Section “Soil Preparation”.
7. Division 32 Section “Topsoil”.
8. Division 32 Section “Trees, Plants, and Groundcovers”.

1.3 DEFINITIONS

A. Finished Grade: Elevation of finished surface of planting soil.

B. Pesticide: A substance or mixture intended for preventing, destroying, repelling, or mitigating a pest. This includes insecticides, miticides, pesticides, fungicides, rodenticides, and molluscicides. It also includes substances or mixtures intended for use as a plant regulator, herbicide, defoliant, or desiccant.

C. Pests: Living organisms that occur where they are not desired or that cause damage to plants, animals, or people. These include insects, mites, grubs, mollusks (snails and slugs), rodents (gophers, moles, and mice), unwanted plants (weeds), fungi, bacteria, and viruses.

D. Planting Soil: Standardized topsoil; existing, native surface topsoil; existing, in-place surface soil; imported topsoil; or manufactured topsoil that is modified with soil amendments and perhaps fertilizers to produce a soil mixture best for plant growth.

E. Subgrade: Surface or elevation of subsoil remaining after excavation is complete, or top surface of a fill or backfill before planting soil is placed.

F. Subsoil: All soil beneath the topsoil layer of the soil profile, and typified by the lack of organic matter and soil organisms.

G. Surface Soil: Soil that is present at the top layer of the existing soil profile at the Project site. In undisturbed areas, the surface soil is typically topsoil, but in disturbed areas such as urban environments, the surface soil can be subsoil.

H. Weeds: Including but not limited to Goathead, Bindweed, Twitch, Dandelion, Jimsonweed, Knapweed, Quackgrass, Horsetail, Morning Glory, Rush Grass, Mustard, Lambsquarter, Chickweed, Cress, Crabgrass, Canadian Thistle, Nutgrass, Poison Oak, Blackberry, Tansy Ragwort, Bermuda Grass, Johnson Grass, Poison Ivy, Nut Sedge, Nimble Weed, Bent Grass, Wild Garlic, Perennial Sorrel, and Broom Grass.

1.4 SUBMITTALS

A. See Division 01 Section “Submittals” for submittal requirements.

B. Product Data: For each type of product indicated.

C. Sod Certificates:
1. State, Federal and other inspection certificates for sod shall be provided to the Project Manager a minimum of 10 working days prior to anticipated date of sod delivery.
2. Submit a list of varieties contained in the sod, and include the source and origin for approval by the Project Manager.

D. Analysis and standards: Wherever applicable, for non-packaged materials, provide two copies of analysis by recognized laboratory made in accordance with methods established by the Association of Official Agriculture Chemists.

E. Planting schedule: Submit in writing two copies of proposed planting schedule, indicating dates for topsoil placing, site preparation, pesticide treatments, soil preparation, sodding, seeding, and coordination with plant procurement, planting soil preparation, plant delivery and planting. Schedule all Work during specified planting seasons. Once accepted, revise dates only as approved in writing, after documentation of reasons for delays.

F. Contract Closeout Submittals:
1. Operating and Maintenance Data: At completion of work, submit one digital copy and two hard copies to the Project Manager in accordance with Division 01 Section “Contract Closeout’. Include directions for irrigation, aeration, mowing, fertilizing and spraying as required for continued and proper maintenance through full growing season and dormant period.
2. Warranty for Turfgrass Sod Areas: At completion of work, furnish written warranty to Project Manager based upon specified requirements.

1.5 QUALITY CONTROL

A. Installer Qualifications: A qualified landscape Installer whose work has resulted in successful turf establishment.
1. Professional Membership: Installer shall be a member in good standing of either the Professional Landcare Network or the American Nursery and Landscape Association.
2. Experience: Five years' experience in turf installation in addition to requirements in Division 01 Section "Quality Control."
3. Installer's Field Supervision: Require Installer to maintain an experienced full-time supervisor on Project site when work is in progress.
4. Sod Producer: Company specializing in sod production and harvesting with minimum five (5) years’ experience, and certified by the State of Colorado Department of Agriculture.

5. Personnel Certifications: Installers shall have certification the following categories from the Professional Landcare Network:
    a. Certified Landscape Technician - Exterior, with installation maintenance irrigation specialty area(s), designated CLT-Exterior.
6. Maintenance Proximity: Not more than two hours' normal travel time from Installer's place of business to Project site.
7. Pesticide Applicator: State licensed, commercial.

B. Soil-Testing Laboratory Qualifications: An independent laboratory or university laboratory, recognized by the State Department of Agriculture, with the experience and capability to conduct the testing indicated and that specializes in types of tests to be performed.

C. Soil Analysis: See Division 32 Section “Soil Preparation”.

D. Preinstallation Conference: Conduct conference at Project site to coordinate the process with other trades, to coordinate equipment movement within planting areas and to avoid soil compaction, to review proposed methods of installation, performance criteria, and maintenance procedures. Review underground utility location maps and plans. This meeting shall be coordinated by the Contractor, and comply with requirements in Division 1.

E. Standards: All materials and methods used during this portion of the work shall meet or exceed applicable federal, state, county, and local laws and regulations. All sod shall be free from insects and disease. Species shall be true to their scientific name as specified.

F. Materials: The Contractor shall submit to the Project Manager for approval a complete list of all materials to be used during this portion of the work prior to delivery of any materials to the site. Include complete data on source, amount and quality. This submittal shall in no way be construed as permitting substitution for specific items described on the plans or in these specifications unless approved in writing by the Project Manager.

G. Source Quality Control:
1. Sod Materials: Subject to inspection and acceptance. The Project Manager reserves the right to reject at any time or place prior to acceptance, any work and sod which in the Project Manager’s opinion fails to meet these specification requirements.
2. Inspection will be made periodically during sodding, at completion and at end of warranty period by the Project Manager. Primarily for quality; however, other requirements are not waived even though visual inspection results in acceptance.
3. Promptly remove rejected sod from site.

H. Sod Standards:
1. Sod shall consist of healthy, thick turf having undergone a program of regular fertilization, mowing and weed control; free of weeds; uniform in green color, leaf texture and density; healthy, vigorous root system; inspected and found free of disease, nematodes, pests and pest larvae by the State Department of Agriculture.
2. Each piece of Sod shall consist of a sandy-loam soil base that will not break, crumble or tear during sod installation.
3. Sod thickness shall be a minimum three quarters inch (3/4”) thick, excluding top growth and thatch.
4. Thatch layer shall not exceed one half inch (1/2”), uncompressed.
5. Sod shall be delivered and installed within twenty four (24) hours of being cut.

1.6 DELIVERY, STORAGE, AND HANDLING

A. Sod: Harvest, deliver, store, and handle sod according to requirements in "Specifications for Turfgrass Sod Materials" and "Specifications for Turfgrass Sod Transplanting and Installation" in TPI's "Guideline Specifications to Turfgrass Sodding." Deliver on pallets properly loaded on vehicles with root system protected from exposure to sun, wind, and heat in accordance with standard practice. Sod that has been damaged by poor handling or improper storage is subject to rejection by the Project Manager.
   1. Protect from dehydration, contamination, freezing and heating at all times. Keep stored sod moist and under shade or covered with moistened burlap.
   2. Do not drop sod rolls from carts, trucks or pallets.
   3. Do not deliver more sod than can be installed within twenty four (24) hours.

B. Fertilizer: Deliver inorganic or chemical fertilizer to site in original unopened container bearing manufacturer’s guaranteed chemical analysis, name, trade name, trademark, warranty and conformance to state law.

C. Bulk Materials:
   1. Do not dump or store bulk materials near structures, utilities, walkways and pavements, or on existing turf areas or plants.
   2. Provide erosion-control measures to prevent erosion or displacement of bulk materials, discharge of soil-bearing water runoff, and airborne dust reaching adjacent properties, water conveyance systems, or walkways.
   3. Accompany each delivery of bulk fertilizers and soil amendments with appropriate certificates.
   4. Fertilizer: Deliver inorganic or chemical fertilizer to site in original unopened container bearing manufacturer’s guaranteed chemical analysis, name, trade name, trademark and conformance to state law, and bearing name and warranty of producer.

D. Material will be inspected upon arrival at project site. Project Manager will reject any opened or unacceptable materials as described above.

E. Immediately remove unacceptable material from job site.

1.7 PROJECT/SITE CONDITIONS

A. Work scheduling: Proceed with and complete landscape work as rapidly as portions of the site become available, working within the specified planting season and approved schedule.

B. Vehicular accessibility on site shall be as directed by Project Manager. Repair damage to prepared topsoil and existing surfaces, caused by vehicular access and movement during work under this section, to original condition at no additional cost to the City.

C. Install sod between April 15 and October 1 or when irrigation is available for twenty one (21) days per Denver Water’s guidelines for sod establishment.

D. Schedule work for periods of favorable weather. Do not install sod on saturated or frozen soil. The Project Manager reserves the right to deny sod installation on days that are deemed to be unfavorable for installation.

E. Existing conditions:

1. Existing Plants: Install sod only after all other landscape and irrigation items have been installed and accepted by the Project Manager.
2. Utilities: Determine location of underground utilities. Perform work in a manner to avoid possible damage. Hand excavate, as required.
3. Excavation: Maintain grade stakes set by others until removal is mutually agreed upon by parties concerned. When conditions detrimental to plant growth are encountered, such as rubble fill, adverse drainage conditions, noxious materials or obstructions, notify Project Manager before planting.
4. If weeds are present on site, treat with pesticide prior to preparing soil for installing sod as specified in this or other Sections.

F. Coordination:
1. Coordinate with construction of utilities on site. Do not begin placing topsoil and sod until underground work is completed in the area.
2. Coordinate sodding with Contractor(s) approved schedule. Limit construction access to areas where topsoil has been placed if placement is completed more than 3 days prior to commencement of landscaping in the area. Limit fine grading to areas that can be prepared for planting within twenty four (24) hours after fine grading.
3. Coordinate with Contractors work requiring access to site over sodded areas.
4. Coordinate with installation of underground irrigation system.

1.8 WARRANTY

A. Warrant sod areas to be in a healthy, vigorous growing condition, and for consistency and completion of coverage for a period of one (1) year from date of Substantial Completion as a full stand of grass. Re-sod any areas where sod has failed due to disease or other inadequate installation, as defined in this Section.
1. During the original warranty period, immediately replace the sod with a comparable sod blend/mix in the areas that have failed to achieve a stand of grass or which are unhealthy in the Project Manager’s opinion.
2. Re-sodding will not be allowed in any season considerable unfavorable for sod installation by the Project Manager.

PART 2 - PRODUCTS

2.1 MATERIALS

A. Topsoil: See Division 32 Section “Topsoil”.

B. Soil Preparation: See Division 32 Section “Soil Preparation.

C. Sod:
1. Colorado grown Kentucky Bluegrass blend having a healthy, vigorous root system. Blend shall contain a minimum of three (3) improved varieties, of which at least one variety is an aggressive type.
2. Sod to be produced in accordance with requirements in "Specifications for Turfgrass Sod Materials" and "Specifications for Turfgrass Sod Transplanting and Installation" in TPI's "Guideline Specifications to Turfgrass Sodding."

3. Harvesting: Sod shall be fertilized 2–3 weeks prior to harvesting. Mow sod to a height of one and one-half inches (1-1/2") before the sod is lifted. Sod shall be harvested in rolls, and shall not be cut more than 24 hours prior to planting.
4. Size: Machine cut to a minimum pad thickness of three quarters inch (3/4), excluding top growth and thatch. Provide sod of uniform pad sizes eighteen inches (18") maximum width by twenty four (24") minimum length, with maximum five percent (5%) deviation in either length or width. Broken pads or pads with uneven ends will not be acceptable. Sod pads incapable of supporting their own weight when suspended vertically from upper ten percent (10%) of pad will be rejected. Sod which has dried out, sod with adhering soil which breaks, tears, or crumbles away will not be accepted. Sod cut for more than twenty-four (24) hours will not be accepted.
5. Plastic netting: Sod to be free of plastic netting used during establishment by sod grower.

D. Fertilizer: Inorganic mixture with following chemical composition: (20-5-10) with fifty percent (50%) sulfur coated urea (no iron), or as recommended by testing lab based on soil sample results.

2.2 PESTICIDES

A. General: Pesticide, registered and approved by EPA, acceptable to authorities having jurisdiction, and of type recommended by manufacturer for each specific problem and as required for Project conditions and application. Do not use restricted pesticides unless authorized in writing by Project Manager and authorities having jurisdiction.
1. Pre-Emergent Herbicide (Selective and Non-Selective): Use only with approval by Project Manager. Effective for controlling the germination or growth of weeds within planted areas at the soil level directly below the mulch layer.
2. Post-Emergent Herbicide: Glyphosate or 2,4-D, or approved equal.

PART 3 - EXECUTION

3.1 EXAMINATION

A. Examine areas to be planted for compliance with requirements and other conditions affecting performance.

1. Verify that finish grades are consistent with the slopes and grades indicated on the Contract Drawings. Verify grades are in conformance with Division 31 Section "Earth Moving".
2. Verify that no foreign or deleterious material or liquid such as paint, paint washout, concrete slurry, concrete layers or chunks, cement, plaster, oils, gasoline, diesel fuel, paint thinner, turpentine, tar, roofing compound, or acid has been deposited in soil within a planting area.
3. Do not mix or place soils and soil amendments in frozen, wet, or muddy conditions.
4. Suspend soil spreading, grading, and tilling operations during periods of excessive soil moisture until the moisture content reaches acceptable levels to attain the required results.
5. Uniformly moisten excessively dry soil that is not workable and which is too dusty.

B. Proceed with installation only after unsatisfactory conditions have been corrected and approved by the Project Manager.

C. If contamination by foreign or deleterious material or liquid is present in soil within a planting area, remove the soil and contamination as directed by Engineer and replace with new planting soil.

D. Beginning of installation means acceptance of existing conditions by the Contractor.

3.2 PREPARATION

A. Work notification: Notify the Project Manager at least seven (7) working days prior to start of sodding operations.

B. Limit turf subgrade preparation to areas that can be sodded within twenty four (24) hours.

C. Newly Graded Subgrades: Prepare soil as required by Division 32 Section “Soil Preparation”.

D. Unchanged Subgrades: If turf is to be planted in areas unaltered or undisturbed by excavating, grading, or surface-soil stripping operations, prepare surface soil as follows:
1. Remove existing grass, vegetation, and turf. Do not mix into surface soil.
2. Loosen surface soil to a depth of at least 8 inches. Apply soil amendments and fertilizers according to planting soil mix proportions and mix thoroughly into top six inches (6”) of soil. Till soil to a homogeneous mixture of fine texture.
3. Remove stones larger than one-half (½”) inch in any dimension and sticks, roots, trash, and other extraneous matter.
4. Legally dispose of waste material, including grass, vegetation, and turf, off City property.

E. Moisten prepared area before planting if soil is dry. Water thoroughly and allow surface to dry before planting. Do not create muddy soil.

F. Verify that all areas are graded to drain at a minimum of two percent (2%) or as indicated on the Contract Drawings. Verify that subsurface drainage system and drain inlets if any, are operative.

G. Verify that irrigation system is operable and provides adequate coverage prior to planting.

H. Adjustment: Adjust irrigation heads to proper watering height according to depth of sod material but lower than compacted blade height to enable lawn mowers to cut grass freely without damage to the sprinkler system.

I. When completed, the soil shall be firmed by float dragging, followed by steel raking, to provide for the proper sodded subgrade. The sod bed shall be totally free from rock or clay clods over one-half inch (1/2”) inch in diameter.

J. Repair: Re-establish grade and specified conditions to damaged sod areas prior to placing sod.

3.3 INSTALLATION

A. Sodding:
1. Sod within twenty-four (24) hours after preparation of bed.
2. If plastic netting is present within sod, remove all netting during sod installation and discard from site.
3. Subgrade on which sod is laid shall be slightly moist during installation.

4. Lay sod with longest dimension parallel to contours and in continuous rows.
5. Tightly butt ends and sides of sod together. Stagger and compact vertical joints between sod strips.
6. Sod shall not be overlapped or stretched during placement. Exposed joints due to shrinkage will require replacement of sod in affected areas.

B. Topsoil: Where new sod abuts an existing turf area topsoil shall be placed along seams and or joints to provide a smooth transition.

C. Rolling: Sod shall be rolled after installation to ensure proper contact with the subgrade, and to ensure tight joints between adjacent pieces. Sod shall be moist prior to rolling. Once rolling is complete additional watering shall occur. Roller shall weigh one-hundred (100) pounds.

D. Drainage: Contractor shall ensure that finished areas are graded so that positive drainage of storm and irrigation water is achieved.

E. Water: Contractor to utilize the existing irrigation system and or quick coupler(s) when available. If irrigation or quick coupler(s) are not available then the contractor is responsible for watering. Refer to Division 31 Section "Watering". Water shall be free of substances that may be harmful to sod growth. Hoses and other watering equipment necessary to water the sod to be furnished by Contractor.
1. Water thoroughly with a fine spray as laying progresses and immediately after planting. Saturate sod with fine water spray within two hours of planting. During first week after planting, water daily or more frequently as necessary to maintain moist soil to a minimum depth of 1-1/2 inches (1-1/2 ") below sod.

F. After sod and soil have dried, roll sodded areas to ensure a good bond between sod and soil and to remove minor depressions and irregularities. Roller shall not exceed one hundred (100) pounds.

3.4 CLEANING

A. Perform cleaning during installation of the Work and upon completion of the Work to the satisfaction of the Project Manager. Remove all excess materials, debris, and equipment from site. Repair any damage resulting from sodding operations.

3.5 PROTECTION

A. Protect existing utilities, paving and other facilities from damage caused by sodding operations, the Contractor shall repair any damage at no additional cost to the City.

B. Restrict vehicular and pedestrian traffic from sodded areas until grass is established. Erect signs and barriers as required or directed by the Project Manager at no additional cost to the City.

C. Locate, protect and maintain the irrigation system during sodding operations. Repair irrigation system components damaged during sodding operations shall be replaced or repaired to current Denver Parks irrigation standards at the Contractor's expense.

D. Erosion Control: Take measures and furnish equipment and labor necessary to control and prevent soil erosion, blowing soil and accumulation of wind-deposited materials on the site throughout the duration of work.

3.6 MAINTENANCE

A. General: The maintenance period shall begin immediately after each area is sodded and continue for Sixty (60) days or as determined by the Project Manager. During this time, the Contractor is responsible for watering, mowing, spraying, weeding, fertilizing and all related work as necessary to ensure that sodded areas are in a vigorous growing condition. Provide all supervision, labor, material and equipment to develop and maintain sodded areas from time of installation.

B. Mowing and Trimming: When turfgrasses reach three and one-half inches (3-1/2") in height, begin weekly mowing program to maintain turf at two and one-half inches (2-1/2") to three inches (3") in height. Do not remove more than 1/3 the height of the grass blade in single mowing. Do not mow when grass is wet. All clippings from adjacent paved areas shall be removed and clippings from mowed turf areas shall be removed to the satisfaction of Project Manager.

C. Fertilizing: Within thirty (30) days of sodding and every sixty (60) days thereafter until Acceptance, apply specified fertilizer to maintain optimal turf vigor or per the direction of the Project Manager.

D. Weed Control: Control annual weeds by mowing. Do not use pesticides unless approved by the Project Manager and Denver Parks Operations Supervisor.

E. Insect and Disease Control: As needed, apply insecticide and fungicide approved by the Project Manager and the Parks Operations Supervisor.

3.7 ACCEPTANCE

A. Substantial Completion of sod areas will not be given until the Project Manager is satisfied with establishment and a full stand of grass, in a vigorous growing condition, and thoroughly rooted to the soil and absence of visible joints. The sodded areas shall be accepted on the basis of having a healthy, uniform stand of turf over the entire sodded area.
   1. Sixty (60) days after sodding, the sodded areas shall be reviewed by the Project Manager and the Contractor. Any areas as determined by the Project Manager where the sod has failed to establish shall be re-sodded.

B. Final Acceptance will be defined as a healthy uniform turf that does not contain any stressed or bare spots greater than one (1) square foot.

PART 4 - MEASUREMENT AND PAYMENT

4.1 MEASUREMENT

A. Measurement will be based on the percentage complete for the lump sum contract amount for Sodding.

4.2 PAYMENT

A. Payment will be made at the lump sum contract price, and shall include required materials, transportation, equipment, labor, earthwork, loading, transporting, stockpiling, disposing,

hauling off, watering, dust control, erosion and sediment control, fine grading, temporary protection by fencing or other means, watering and all maintenance required until Final Acceptance of the work as required in accordance with the Contract Drawings and Specifications.

END OF SECTION 32 92 23

SECTION 32 93 00 TREES, PLANTS, AND GROUNDCOVERS

PART 1 - GENERAL

1.1 RELATED DOCUMENTS

A. Contract Drawings and general provisions of the Contract, including General and Supplementary Conditions and Division 01 Specification Sections, apply to this Section.

1.2 SUMMARY

A. This Section includes requirements for furnishing, installing, and maintaining live woody plant material.

B. Related Sections:
1. Division 01 Section “Tree Retention and Protection”.
2. Division 31 Section “Clearing and Grubbing”.
3. Division 31 Section “Earth Moving”
4. Division 32 Section “Watering”.
5. Division 32 Section “Irrigation System”.
6. Division 32 Section “Automatic Irrigation Controllers”
7. Division 32 Section “Soil Preparation”.
8. Division 32 Section “Topsoil”.
9. Division 32 Section “Landscape Maintenance”.

1.3 DEFINITIONS

A. ANSI: American National Standards Institute. Z60.1 is the national standard for nursery stock.

B. Backfill: The earth used to replace or the act of replacing earth in an excavation.

C. Balled and Burlapped Stock: Plants dug with firm, natural balls of earth in which they were grown wrapped with burlap, tied, rigidly supported, and drum laced with twine with the root flare visible at the surface of the ball as recommended by ANSI Z60.1.

D. Bare-Root Stock: Plants with a well-branched, fibrous-root system developed by transplanting or root pruning, with soil or growing medium removed, and with not less than the minimum root spread according to ANSI Z60.1 for type and size of plant required.

E. Caliper: Trunk diameter is measured six-inches (6”) from the ground; if the caliper is greater than four-inches (4”), the measurement is taken at twelve-inches (12”) from the ground.

F. Cane: A cane shall be considered a primary stem which starts from the ground or at a point close to the ground at a point not higher than one-fourth (1/4) the height of the plant, and which reaches the minimum height stated in the plant size specification.

G. Central leader: Also referred to as leader or the dominant leader. A continuation of the main trunk located more or less in the center of the crown, beginning at the lowest main scaffold branch and extending to the top of the tree.

H. Circling root(s): One or more roots whose diameter is greater than ten percent (10%) of the trunk caliper circling more than one-third of the trunk. Circling roots are unacceptable.

I. Clear Trunk: The portion of the trunk below the main crown which may include shortened temporary branches.

J. Co-dominant: Two or more vigorous, upright branches or stems of relatively equal diameter that originate from a common point, usually where the leader was lost or removed. Co-dominant stems are unacceptable.

K. Container-Grown: Healthy, vigorous, well-rooted plants grown in a container, with a well-established root system reaching sides of container and maintaining a firm ball when removed from container. Container shall be rigid enough to hold ball shape and protect root mass during shipping and be sized according to ANSI Z60.1 for type and size of plant required.

L. Critical Root Zone (CRZ): Shall be defined as the tree protection area encompassing from 1.5 (minimum) to 2.0 times the distance between the trunk and drip line, or one linear foot away from the trunk base for every-inch diameter of the trunk, whichever is greater.. Review the extent of the CRZ for impacted trees with Project Manager prior to start of work.

M. Crown: The portion of a tree beginning at the lowest main scaffold branch extending to the top of the tree. On younger trees, the crown may be comprised of temporary branches.

N. Cultivar: A named plant selection from which identical or nearly identical plants can be produced, usually by vegetative propagation or cloning.

O. Drip Zone: The outermost edge of the tree's canopy or branch spread. The area within a tree's drip line is all the ground under the total branch spread.

P. Finish Grade: Elevation of finished surface of planting soil.

Q. Included Bark: Bark embedded in the union between a branch and the trunk or between two or more stems that prevents the formation of a normal branch bark ridge. Included bark is unacceptable.

R. Kinked Root: A main root that is sharply bent. Kinked roots are unacceptable.

S. Pesticide: A substance or mixture intended for preventing, destroying, repelling, or mitigating a pest. Pesticides include insecticides, miticides, herbicides, fungicides, rodenticides, and molluscicides. They also include substances or mixtures intended for use as a plant regulator, defoliant, or desiccant. Some sources classify herbicides separately from pesticides.

T. Pests: Living organisms that occur where they are not desired or that cause damage to plants, animals, or people. Pests include insects, mites, grubs, mollusks (snails and slugs), rodents (gophers, moles, and mice), unwanted plants (weeds), fungi, bacteria, and viruses.

U. Root Collar: Also referred to as the root flare. The base of a tree where the main roots and trunk meet.

V. Scaffold Branches: Large main branches that form the main structure of the crown.

W. Stem-girdling Root: A circling, bent, or straight root that touches or rests on the trunk or root flare that can become a permanent root. Stem-girdling roots are unacceptable.

X. Subgrade: The surface or elevation of subsoil remaining after excavation is complete, or the top surface of a fill or backfill before planting soil is placed.

Y. Temporary Branch: A small branch that is temporarily retained along the lower trunk of young trees.

Z. Trunk: The main stem of a tree, beginning at the root collar and ending at the lowest main scaffold branch.

AA. Taper: The thickening of a trunk or branch toward its base.

1.4 SUBMITTALS

A. See Division 01 Section “Submittals” for submittal requirements.

B. Product Data: For each type of product.
1. Plant Materials: Include quantities, sizes, quality, and sources for plant materials.

C. Product Samples: At a minimum provide the following samples for approval by the Project Manager, additional product samples may be required at the direction of the Project Manager.
1. Mulch: one(1) gallon bag minimum of each type of mulch.
2. Tree Stakes: one(1) of each type.
3. Tree Straps: one(1) each.
4. Guy Material: one(1) linear foot.
5. Guy Signal: one(1) linear foot.
6. Tree Wrap: one(1) linear foot.

D. Pesticides: Product label, Safety Data Sheet (SDS) labels and manufacturer's application instructions specific to Project.

E. Proper Identification: All plants shall be true to name as ordered or shown on planting plans and shall be labeled individually or in groups by species and cultivar (as appropriate).

F. Contractor shall provide a complete list of all plant material for approval by the Project Manager a minimum of ten (10) days prior to delivery. Any substitutions of plant material, including but not limited to size, type, species and variety shall be listed and submitted to the Project Manager for approval.

G. Contractor shall provide the following certificates:
1. State Inspection Certificate from the origin nursery.
2. Certificate from origin state.
3. Quarantine Certificate from origin state.
4. Any Certificates required by the USDA Animal and Plant Health Inspection Service (APHIS) and ANSI-Z-160 and accompanying Rules and Regulations.

H. Analysis of existing soil shall be per Division 32 Sections “Topsoil” and “Soil Preparation”.

I. Contract Close Out Submittals:

1. Operating and Maintenance Data: At completion of work, submit One (1) digital copy and two (2) hard copies to the Project Manager in accordance with Division 01 Section "Contract Closeout". Include recommended procedures for continued and proper maintenance during a full calendar year.
2. Warranty for Trees, Plants, and Groundcovers: At completion of work, furnish written warranty to the Project Manager based upon specified requirements.

1.5 QUALITY CONTROL

A. The Project Manager reserves the right to reject, at any time or place prior to final acceptance, all plant materials that fail to meet these specifications in the Project Manager's opinion. Inspection of materials is primarily for quality, size, and variety, but other requirements are not waived even though visual inspection results in approval. Plants are to be inspected where available; however, inspection at the places of supply shall not preclude the right of rejection at the site or at a later time prior to final acceptance. Rejected material shall be removed from the site within twenty-four (24) hours.

1.6 DELIVERY, STORAGE, AND HANDLING

A. Materials: Deliver materials in original containers with tags showing genus, species and size. Protect materials from damage during delivery and while stored at site. The Project Manager reserves the right to inspect containers before or after installation to verify compliance with Specifications.

B. Bulk Materials:
1. Do not dump or store bulk materials near structures, utilities, walkways and pavements, or on existing turf areas or plants or critical root zone.
2. Provide erosion-control measures to prevent erosion or displacement of bulk materials; discharge of soil-bearing water runoff; and airborne dust reaching adjacent properties, water conveyance systems, or walkways.
3. Accompany each delivery of bulk materials with appropriate certificates.

C. Trees: Nursery stock shall be harvested and planted during the same growing season. Do not prune, except as approved by the City Forester and Project Manager. Protect bark, branches, and root systems from sun scald, drying, sweating, whipping, and other handling and tying damage. Do not bend or tie trees in such a manner as to destroy natural shape. Provide protective covering during delivery. Plant materials delivered without protective covering may be rejected. Do not drop trees during delivery. All trees shall be labeled with a securely attached waterproof tag bearing a legible plant name. Remove all tags and flagging as directed by the Project Manager.

D. Deliver bare-root stock plants within twenty-four (24) hours of digging. Immediately after digging up bare-root stock, pack root system in wet straw, hay, or other suitable material to keep root system moist until planting. Transport in covered, temperature-controlled vehicles, and keep plants cool and protected from sun and wind at all times.

E. Store bulbs, corms, and tubers in a dry place at sixty degrees to sixty-five degrees (60° to 65°) F until planting.

F. Apply antidesiccant to trees and shrubs using power spray to provide an adequate film over trunks (before wrapping), branches, stems, twigs, and foliage to protect during digging, handling, and transportation.
   1. If deciduous trees or shrubs are moved in full leaf, spray with antidesiccant at nursery before moving and again (2) two weeks after planting.

G. Handle planting stock by the root ball only.

H. Deliver trees after preparations for planting have been completed and install immediately. If planting is delayed more than six (6) hours after delivery, set planting materials in shade, protect from weather and mechanical damage, and keep roots moist.
   1. Set balled stock on ground and cover ball with wood chips, or other acceptable material.
   2. Do not remove container-grown stock from containers before planting.
   3. Water root systems of trees stored on site with a fine-mist spray. Water as often as necessary to maintain root systems in a moist condition.

1.7 PROJECT/SITE CONDITIONS

A. Field Measurements: Verify actual grade elevations, service and utility locations, irrigation system components, and dimensions of plantings and construction contiguous with new plantings by field measurements before proceeding with planting work.

B. Vehicular accessibility on site shall be as directed by Project Manager. Repair damage to prepared topsoil and existing surfaces, caused by vehicular access and movement during work under this section, to original condition at no additional cost to the City.

C. Utilities: Contractor shall be responsible locating utilities and, repair of utilities damaged during the work. Determine location of overhead and underground utilities and perform work in a manner that will avoid damage. Hand excavate, as required. Maintain markings until their removal is mutually agreed upon by the Contractor and Project Manager.

D. Excavation: When conditions detrimental to plant growth are encountered, such as rubble fill, adverse drainage conditions, or obstructions, notify the Project Manager before planting.

E. Weather Limitations: Proceed with planting only when existing and forecasted weather conditions permit planting to be performed when beneficial and optimum results may be obtained. Apply products during favorable weather conditions according to manufacturer's written instructions and warranty requirements.

F. Protection: Erect and maintain barricades, warning signs and lights, and provide guards as necessary or required to protect all persons on the site from exposed excavations.

1.8 COORDINATION AND SCHEDULING

A. Coordinate installation of planting materials during normal planting seasons for each type of plant material required. Planting materials should be planted between April 15 and October 1, or at the direction of the Project Manager. If irrigation is not available at the time of planting then the Contractor is responsible for watering of all plant material and no additional cost to the City, refer to Division 32 Section “Watering”.

B. Plant trees after final grades have been accepted and prior to seeding or sodding, unless otherwise authorized by Project Manager.

1.9 WARRANTY

A. Warranty: The warranty specified in this Article shall not deprive the City of other rights the City may have under other provisions of the Contract Documents and shall be in addition to, and run concurrent with, other warranties made by the Contractor under requirements of the Contract Documents.

B. Trees, Plants, and Groundcovers shall be warranted for a period of one (1) year after date of Substantial Completion, against defects including death, structural failures, dieback as determined by the City Forester and or Project Manager. Warranty shall not cover defects resulting from lack of adequate maintenance, neglect or abuse by City staff, hail, or incidents that are beyond Contractor's control.

C. The warranty shall not be enforced should any plant die due to vandalism after Final Acceptance.

D. Remedial Actions:
1. Replace any plant materials that have been excessively pruned, more than twenty percent (20%) percent dead, or in an unhealthy or declining condition immediately upon notice from the Project Manager during warranty period.
2. Immediately remove dead plants and replace unless required to plant in the succeeding planting season.

E. All plants shall be true to name and meet all conditions of these specifications. Any plant that is not true to name as indicated by form, leaf, flower, or fruiting characteristics shall be replaced at the Contractor's expense.

1.10 TREE MAINTENANCE DURING CONSTRUCTION PERIOD

A. Maintain trees by pruning, cultivating, watering, mulching, winter watering, weeding, wrapping, unwrapping, restoring planting saucers, and resetting to proper grades or vertical position, as required to establish healthy, viable plantings. Control as required to keep trees free of insects and disease. Restore or replace damaged tree wrappings, stakes, guying. Trees shall be maintained by the Contractor through the Warranty period of the project.

PART 2 - PRODUCTS

2.1 PLANT MATERIALS

A. General: Furnish and install nursery-grown trees and shrubs conforming to the requirements of ANSI-Z-160, with healthy root systems developed by transplanting or root pruning. Provide well shaped, symmetrical, fully branched, healthy, and vigorous stock free of disease, insects, eggs, larvae, girdling, and defects such as sun scald, injuries, abrasions, and disfigurement. Trees of a larger size than that specified in the plant list may be used with a proportionate increase in size of roots and balls, if acceptable to the Project Manager. The use of larger plants shall be covered by the Contractor at no additional cost to the City.

B. Label all plants of each size, caliper and variety and caliper with a securely attached waterproof tag bearing legible designation of botanical and common name.

C. All plants shall be the genus, species, and variety designated on the Contract Drawings. No substitutions will be accepted without the prior written approval of the City Forester and or the Project Manager. Contractor must provide proof of non-availability.

2.2 TREES

A. These specifications shall apply to deciduous, broadleaf evergreen and coniferous species. Note that leaf characteristics will not be evident on deciduous trees during the dormant season.

B. Crown: The form and density of the crown shall be typical for a young specimen of the species/cultivar. Changes in form caused by wind, pruning practices, pests, or other factors shall not substantially alter the form for the species/cultivar. These crown specifications do not apply to plants that have been specifically trained in the nursery to be: topiary, espalier, multi-stem, or clump; or unique selections such as contorted or weeping cultivars.

1. Trees shall have a single, relatively straight trunk, and central leader, unless noted on plans to be “Multi-trunk” or “Clump”. They shall be free of co-dominant stems and vigorous, upright branches that compete with the central leader. If the original leader has been headed, a new leader at least one-half of the diameter of the original leader shall be present.
2. Main branches shall be evenly distributed along the central leader, not clustered together. They shall form a balanced crown appropriate for the age of the species/cultivar.
3. Branch diameter shall be no larger than one-half the diameter of the central leader measured one-inch (1”) above where the branch is attached.
4. The attachment of the largest scaffold branches shall be free of included bark.
5. Temporary branches, unless otherwise specified, should be present along the lower trunk below the lowest scaffold branch, particularly for trees less than one-inch (1”) in caliper. These branches should be no greater than three-eighths-inch (3/8”) diameter. Clear trunk shall be no more than thirty percent (30%) of the total height of the tree, unless otherwise noted

C. Trunk: The tree trunk shall be relatively straight, vertical, and free of wounds, except properly made pruning cuts, which shall be closed over or less than three-quarters-inch (3/4”) diameter open, sunburned areas, conks (fungal fruiting bodies), wood cracks, bleeding areas, signs of boring insects, galls, cankers, stem-girdling ties, or lesions (mechanical injury).

1. Trunk caliper and taper shall be sufficient so that the tree will remain vertical without a stake. Trunk caliper at six-inches (6”) above the soil media (substrate) surface shall be within the diameter range shown for each container size below and as specified in current edition of ANSI Z60.1.
2. The cut made when re-growing the top should be just above the major structural roots. The “shank” that results from this procedure should be at a consistent height above the structural roots and no longer than five-inches (5”), to ensure that the trees are consistently planted at the correct depth. The base of the trunk should not have a large pruning cut from re-growing the top.

D. Roots: The root system shall be substantially free of injury from biotic (e. g., insects and pathogens) and abiotic (e. g., pesticide toxicity and salt injury) agents.

1. The uppermost roots or root collar shall be within the upper two-inches (2”) of the soil media (substrate). Depth of the root-ball shall be measured from the top of the ball,

which in all cases shall begin at the root flare. Soil above the root flare shall not be included in the root-ball depth measurement, and shall be removed.

2. The root collar and the inside portion of the root-ball shall be free of defects, including circling, kinked, and stem-girdling roots. Soil removal or root washing near the root collar may be necessary to inspect for the aforementioned root defects.
3. Roots on the periphery and bottom of the root-ball shall be less than one-eighth-inch (1/8") diameter.
4. The tree shall be well rooted in the soil media (substrate). Root distribution shall be uniform throughout the soil or media. Structure and growth shall be appropriate for the species/cultivar. When the burlap or container is removed, the root-ball shall remain intact. Trees should have several lateral roots or many fibrous roots spaced evenly around the trunk to provide support so the trees are stable when planted. Trees should have as many small roots as possible. These roots are key to the uptake of sufficient water and nutrients. Fibrous roots can be achieved by root-pruning, using air-pruning containers, or under-cutting or root pruning and transplanting at any stage of production.
5. As a general rule for young nursery-grown trees, there should be two or more structural roots within one- to three-inches (1" – 3") of the soil surface. "First order lateral roots" is another term that has been used for these roots. If the roots are deeper than three-inches (3") , the stock shall be rejected.
6. Root-balls that are undersized as specified in current edition of ANSI Z60.1. shall be rejected. Field grown trees for balled and burlap delivery shall have the roots pruned at least six-inches (6") inside the final root-ball size performed within adequate time for the tree to develop fibrous roots at the outer edge of the root-ball prior to harvest and delivery.

E. Leaves: The size, color, and appearance of leaves shall be typical for the time of year and stage of growth of the species or cultivar. Trees shall not show signs of prolonged moisture stress or extended drought as indicated by wilted, shriveled, or dead leaves.

F. Branches: Shoot growth (length and diameter) throughout the crown shall be appropriate for the age and size of the species/cultivar. Trees shall not have dead, diseased, broken, distorted, or otherwise injured branches.

G. All deciduous trees of one species used in formal rows or groupings shall exhibit cultural uniformity, i.e. "matched" in height, crown width and shape, height to first branch, and trunk taper. For this reason it is desired that these trees be produced by a single grower.

H. Collected Stock: Do not use plants harvested from the wild, from native stands, from an established landscape planting, or not grown in a nursery unless otherwise indicated, and only if approved by the City Forester and or the Project Manager.

2.3 SHRUBS

A. Container Grown Shrubs: All specifications for container grown plants shall include both plant size and container size. Plant size intervals and reference to height or spread shall be in accordance with the guidelines for the appropriate plant type set forth in ANSI Z60.1; Section 2.2 - Types of Deciduous Shrubs.

B. Container size shall be by container classification (i.e., not by container volume) as set forth in the ANSI Z60.1 Container Class Table.

C. In all cases, container grown nursery stock shall meet the following general requirement:
   1. All container grown nursery stock shall be healthy, vigorous, well rooted, and established in the container in which it is growing. Container grown nursery stock shall have a well-established root system reaching the sides of the container to maintain a firm ball when the container is removed, but shall not have excessive root growth encircling the inside of the container.

D. The container shall be sufficiently rigid to hold the ball shape and to protect the root mass during shipping.

E. Minimum shrub sizes shall conform to the following standards:
   1. Tender shrubs (Type 0) that do not produce top growth that is winter hardy:

Height or Spread	**Minimum number of canes**	**Minimum spread of roots**
fifteen-inches (15”)	three (3) canes	Nine-inches (9”)

   2. Small shrubs (Type 1) that grow to a mature height of not more than three feet (3’):

Height or Spread	**Minimum number of canes**	**Minimum spread of roots**
fifteen-inches (15”)	four (4) canes	Nine-inches (9”)

   3. Intermediate shrubs (Type 2) that grow to a mature height between three feet (3’) and seven feet (7’):

Height or Spread	**Minimum number of canes**	**Minimum spread of roots**
Two feet (2’)	four (4) canes	twelve-inches (12”)

   4. Large shrubs (Type 3) that grow to a mature height exceeding seven feet (7’):

Height or Spread	**Minimum number of canes**	**Minimum spread of roots**
four feet (4’)	six canes (6)	twenty-inches (20”)

2.4 PERENNIALS, GRASSES, GROUNDCOVERS, AND VINES

A. All container grown plants shall be healthy, vigorous, well rooted, and established in the container in which they are growing, and be in conformance with ANSI Z60.1. A container grown plant shall have a well-established root system reaching the sides of the container to maintain a firm root ball, but shall not have excessive root growth encircling the inside of the container. Top growth is to be in conformance with established nursery standards.

2.5 TREE-STABILIZATION MATERIALS

A. Trunk-Stabilization Materials:
   1. Deciduous Tree Stakes: Rough-sawn, sound, new softwood with specified wood preservative treatment by pressure process, free of knots, holes, cross grain, and other defects, two-inch (2”) diameter by six feet (6’), pointed at one end.
   2. Evergreen Tree Stakes: Two foot (2’) steel T-posts; green color.
   3. Guys and Tie Wires: ASTM A 641/A 641M, Class 1, #14 galvanized-steel wire, two-strand, twisted.
   4. Tree-Tie Webbing: UV-resistant nylon webbing with brass grommets, size as indicated.

5. Safety signals for guy and staking wire: one-half-inch (1/2") diameter PVC pipe, length as indicated.

B. Tree-Wrap:
1. Two layers of crinkled paper cemented together with bituminous material, four-inches (4") wide minimum, with stretch factor of thirty-three percent (33%).
2. Tree wrap tape: Tape as approved by the City Forester and or the Project Manager.

2.6 MULCH

A. Organic Mulch: Organic mulch, free from deleterious materials and suitable as a top dressing of trees and shrubs, consisting of chipped wood material not larger than four-inches (4") in length. Submit a one (1) gallon bag sample to Project Manager for approval. Mulch is to be weed-free.

2.7 PLANT PIT BACKFILL MATERIAL

A. Unless otherwise directed by the Project Manager, the plant pit backfill material shall consist of the following, thoroughly mixed:
1. Soil originally excavated from the pit: two thirds (2/3) proportion of total mix.
2. Soil Amendment as specified in Division 32 Section "Soil Preparation"; one-third (1/3) proportion of total mix.

B. If imported topsoil is required, it shall meet the requirements specified in Division 32 Section "Topsoil", Article 2.2.

2.8 WATER

A. During the irrigation season (generally May through September), water will be available from on-site quick couplers. When the system is not charged, it shall be the Contractor's responsibility to supply adequate amounts of water from a water truck or other approved source. Hoses and other watering equipment shall be supplied by Contractor.
1. Watering Amount: Ten (10) gallons per caliper-inch.

B. Watering: Refer to Division 32 Section "Watering".

C. Maintenance: Refer to Division 32 Section "Landscape Maintenance".

2.9 MISCELLANEOUS MATERIALS

A. Antidesiccant: Water-insoluble emulsion, permeable moisture retarder, film forming, for trees, as approved by the City Forester and or the Project Manager. Deliver in original, sealed, and fully labeled containers. Mix and apply according to manufacturer's instructions.

B. Pre-Emergent Pesticide: As approved by the City Forester and or the Project Manager.

C. Pesticides: EPA registered and approved, and as approved by the City Forester and the Project Manager.

D. Subdrainage: See Division 33 Section "Subdrainage Systems".

PART 3 - EXECUTION

3.1 EXAMINATION

A. Examine areas to receive landscaping for compliance with requirements and for conditions affecting performance of work of this Section. Do not proceed with installation until unsatisfactory conditions have been corrected.
   1. Verify that no foreign or deleterious material or liquid such as paint, paint washout, concrete slurry, concrete layers or chunks, cement, plaster, oils, gasoline, diesel fuel, paint thinner, turpentine, tar, roofing compound, or acid has been deposited in soil within the work area.
   2. Verify that adequate overhead clearance exists to planting locations.
   3. Suspend planting operations during periods of excessive moisture until acceptable planting conditions exist.
   4. Uniformly moisten excessively dry soil that is not workable.

B. If contamination is present in the soil within a planting area, notify Project Manager immediately.
   1. If contamination is discovered during Construction the Project Manager will determine the best course of action to remediate the contamination, which may include requesting the Contractor perform the removal of contamination and replacement of clean material.
   2. If contamination is determined to be the result of construction operations, Contractor is to remove contaminated material and replace with clean material at the direction of the Project Manager.

C. Proceed with installation only after unsatisfactory conditions have been corrected and approved by Project Manager.

D. Cooperate with any other contractors and trades, who may be working in and adjacent to the landscape work areas. Examine Contract Drawings which show the development of the entire site and become familiar with the scope of all work required.

3.2 FINISH AND FINE GRADING

A. See Division 31, Sections “Earth Moving and 32 Sections “Soil Preparation” and “Topsoil”.

3.3 PREPARATION

A. Protect structures, utilities, sidewalks, pavements, and other facilities, turf areas and existing plants from damage caused by planting operations. Repair damage to surrounding areas and site elements noted above resulting from planting operations at no additional cost to the City.

B. Layout, stake and label all individual tree locations for approval by the Project Manager prior to installing trees.

C. Outline planting beds and mark plant locations within the bed(s) for approval by the Project Manager prior to installing any plant material or mow bands. Make adjustments as directed at no additional cost to the City.

1. If formal arrangements or consecutive order of plants is indicated on Contract Drawings, select stock for uniform height and spread, and number the labels to assure symmetry in planting.

D. Prepare planting area for soil placement and mix planting soil according to Division 32 Section "Soil Preparation".

3.4 WEED CONTROL

A. Do not proceed with landscape work until weed growth has been controlled and eliminated, per Division 32 Section "Soil Preparation".

B. See Division 32 Section "Soil Preparation" for detailed weed control measures.

C. Use pesticides only with the written approval of Project Manager, and in strict accordance with manufacturer's instructions.

3.5 EXCAVATION FOR TREES AND SHRUBS

A. Planting Pits: Excavate by hand or with a backhoe. Scarify sides of tree pit. Tree spade may not be used to dig tree pits.
1. Balled and Burlapped Trees: Excavate a minimum two times (2X) as wide as ball diameter at base of pit. The base of the root collar shall be three-inches (3") higher than the grade at which the tree originally grew and finished grade. Slope sides of the pit as shown on the detail.
2. Container-Grown Trees and Shrubs: Excavate approximately two times (2X) times as wide as container diameter. Plants shall be set one-inch (1") higher than finished grade.
3. Do not excavate deeper than depth of the root ball, measured from the base of the root flare to the bottom of the root ball.
4. If area under the plant was initially dug too deep, add soil to raise it to the correct level and thoroughly compact the added soil to prevent settling.

B. Obstructions:
1. Utilities: Notify Project Manager immediately of utilities that conflict or may potentially conflict with proposed plant locations. In such cases, alternative plant locations will be determined by Project Manager.
2. Notify the Project Manager prior to planting if unexpected rock or obstructions detrimental to trees or shrubs are encountered in excavation.

C. Drainage: Notify the Project Manager if subsoil conditions show evidence of water seepage or retention in tree or shrub pits.
1. Fill the pit with water and allow it to completely drain before planting occurs.
2. If water does not drain out of pit within twenty-four (24) hours, notify Project Manager.

3.6 PLANTING TREES AND SHRUBS

A. Balled and Burlapped Stock:
1. Set balled and burlapped stock plumb and in center of pit with base of root flare three-inches (3") above adjacent finish grades as indicated.
2. Remove burlap from top two-thirds (2/3) of balls and partially from sides, but do not remove from under balls. Remove wire baskets and all twine entirely. Remove pallets, if

any, before setting. Do not use planting stock if ball is cracked or broken before or during planting operation.

3. Place backfill around ball in layers, tamping to settle backfill and eliminate voids and air pockets. When pit is approximately one-half backfilled, water thoroughly before placing remainder of backfill. Repeat watering until no more is absorbed. Water again after placing and tamping final layer of backfill.

B. Container Grown Stock:
   1. Carefully remove containers so as not to damage root balls.
   2. Lightly scratch sides of exposed root ball to loosen surface roots.
   3. Set plants plumb and in center of pit with top of ball raised one-inch (1") above adjacent finish grades or as indicated.
   4. Place backfill around ball in layers, tamping to settle backfill and eliminate voids and air pockets. When pit is approximately one-half backfilled, water thoroughly, then place remainder of backfill. Repeat watering until no more is absorbed. Water again after placing and tamping final layer of backfill.

C. Bare-Root Stock: Set and support each plant in center of planting pit or trench with root flare two-inches (2")above adjacent finish grade.
   1. Backfill: As specified in Part 2 of this Section.
   2. Spread roots laterally without tangling or turning toward surface. Plumb before backfilling, and maintain plumb while working.
   3. Carefully work backfill in layers around roots by hand eliminating air pockets. Bring roots into close contact with the soil.
   4. When planting pit is approximately one-half filled, water thoroughly before placing remainder of backfill. Repeat watering until no more water is absorbed.
   5. Continue backfilling process. Water again after placing and tamping final layer of soil.

D. Tree Staking: Stake trees as shown on the Contract Drawings.

E. Wrapping tree trunks: Wrap trees with tree wrap tape. Start at base of trunk and spiral cover trunk to height of first branches. Overlap wrap, exposing half the width, and securely attach without causing girdling. Use specified tape to secure. Do not use staples. Inspect tree trunks for injury, improper pruning, and insect infestation and take corrective measures required before wrapping.
   1. All deciduous trees shall be wrapped between November 1st and November 15th or per the direction of the City Forester and or the Project Manager. All tree wrap shall be removed by May 15.
   2. Contractor shall be responsible for wrapping and unwrapping trees during the warranty period.

3.7 PRUNING OF PLANTS

A. Prune only damaged or dead branches as directed by the City Forester and or the Project Manager.

3.8 TREE STABILIZATION

A. Trunk Stabilization by Staking: Install trunk stabilization as follows unless otherwise indicated on Contract Drawings.
   1. Site-Fabricated Staking Method: Stake trees as indicated on Contract Drawings.

a. Drive stakes into undisturbed grade outside tree pit as indicated. Avoid penetrating root balls or root masses.
b. Securely attach specified wire to stakes.
c. Support trees with specified wire and tree tie webbing at contact points with tree trunk, reaching to specified stake. Allow enough slack to avoid rigid restraint of tree.
d. For guyed trees: Attach thirty-six-inch (36”) long x one-half-inch (1/2”) diameter PVC pipe flagging to each wire.
e. For staked trees: Attach twenty four-inch (24”) long x one-half-inch (1/2”) diameter PVC pipe flagging to each wire.

3.9 MULCHING

A. Trees: Create a forty-eight-inch (48”) diameter formed soil berm around tree and fill with three-inch (3”) deep specified wood mulch. Mulch shall be kept four to six-inches (4”-6”) away from tree trunk.

B. Shrubs:
1. Mulch backfilled surfaces of pits, planting beds areas, and other areas indicated or as directed by the Project Manager.
2. Mulch in shrub bed areas: Apply three-inch (3”)thick layer of mulch and finish level with adjacent finish grades. Do not place mulch against stems of plants.

3.10 INSTALLATION OF MISCELLANEOUS MATERIALS

A. Apply antidesiccant using power spray to provide an adequate film over trunks, branches, stems, twigs, and foliage.

B. When deciduous plants are moved in full-leaf, Project Manager may direct the use of an antidesiccant at nursery before moving and again two (2) weeks after planting. Antidessicant to be supplied and applied by Contractor at no additional cost to the City.

3.11 QUALITY CONTROL

A. Provide quantity, size, genus, species, and variety of trees indicated, complying with current applicable requirements of ANSI Z60.1 “American Standard for Nursery Stock”, and all applicable state and local rules and regulations.

B. Inspection: Contractor shall arrange for the Project Manager to select and/or inspect plant material at the nursery/.,/grow site or upon delivery to the site, for compliance with requirements for genus, species, variety, cultivar, size, and quality. Selection and approval of plant material shall be at the discretion of the Project Manager and/or Forestry.
1. The Contractor shall schedule inspection of the plants, at either the supplier or on-site, to be completed in one visit. Any further inspection required due to plants being unavailable, rejected, and or not meeting specifications shall be charged to the Contractor at the current hourly rate for the City personnel performing the inspection.
2. The Contractor shall pay all expenses for the Project Manager and City Forester to visit the source for plants including airfare, taxi, hotels and meals.

C. Measurements: Measure trees according to the requirements of the ANSI Z-160, with branches and trunks in their normal position. Do not prune to obtain required sizes. Measure main body of tree for height and spread; do not measure branches or roots tip-to-tip.

3.12 PROTECTION

A. Protect existing utilities, paving and other facilities from damage caused by seeding operations, Contractor shall repair any damage at no additional cost to the City.

B. Restrict vehicular and pedestrian traffic from planted areas. Erect signs and barriers as required or directed by the Project Manager at no additional cost to the City.

C. Locate, protect and maintain the irrigation system during seeding operations. Repair irrigation system components damaged during seeding operations shall be replaced or repaired to current City irrigation standards at Contractor's expense.

D. Erosion Control: Take measures and furnish equipment and labor necessary to control and prevent soil erosion, blowing soil and accumulation of wind-deposited materials on the site throughout the duration of work.

E. At time of Substantial Completion, verify that tree-watering devices are in good working order and leave them in place. Replace improperly functioning devices.

3.13 CLEANING

A. General: Provide and install barriers as required and as directed by Project Manager to protect sodded areas against damage from pedestrian and vehicular traffic until Final Acceptance.

3.14 DISPOSAL OF SURPLUS AND WASTE MATERIALS

A. Disposal: Remove surplus soil including excess subsoil and unsuitable soil, waste material, including, trash, and debris generated during installation off site at no additional cost to the City.

PART 4 - MEASUREMENT AND PAYMENT

4.1 MEASUREMENT

A. Measurement will be based on the percentage complete for the lump sum contract amount for Trees, Plants, and Groundcovers.

4.2 PAYMENT

A. Payment will be made at the lump sum contract price, and shall include required materials, transportation, equipment, labor, earthwork, loading, transporting, stockpiling, disposing, hauling off, watering, dust control, erosion and sediment control, fine grading, maintenance of temporary protection by fencing or other means, watering and all maintenance required until Final Acceptance of the work as required in accordance with the Contract Drawings and Specifications.

END OF SECTION 32 93 00

DIVISION 33 – UTILITIES

SECTION 33 14 16 SITE WATER UTILITY DISTRIBUTION PIPING

PART 1 GENERAL

1.1 SUMMARY

A. Section Includes:
1. Pipe and fittings for site water line including domestic water lines, fire water line, and service lines.
2. Valves.
3. Hydrants.
4. Positive displacement meters.
5. Backflow preventers.
6. Underground pipe markers.
7. Precast concrete vault.
8. Bedding and cover materials.

B. Related Sections:
1. Section 02060 - Aggregate: Aggregate for backfill in trenches.
2. Section 02315 - Excavation and Fill: Product and execution requirements for excavation and backfill required by this section.
3. Section 02320 - Backfill: Requirements for backfill to be placed by this section.
4. Section 02324 - Trenching: Execution requirements for trenching required by this section.
5. Section 02516 - Disinfection of Water Distribution: Disinfection of site service utility water piping.
6. Section 03300 - Cast-in-Place Concrete: Concrete for thrust restraints.
7. Section 15140 - Domestic Water Piping: Product and execution requirements for domestic water piping within 5 feet (1500 mm) of building.

1.2 REFERENCES

A. Engineering Standards, Denver Water, Latest Edition

B. American Association of State Highway and Transportation Officials:
1. AASHTO T180 - Standard Specification for Moisture-Density Relations of Soils Using a 4.54-kg (10-lb) Rammer and a 457-mm (18-in.) Drop.

C. American Society of Mechanical Engineers:
1. ASME B16.18 - Cast Copper Alloy Solder Joint Pressure Fittings.
2. ASME B16.22 - Wrought Copper and Copper Alloy Solder Joint Pressure Fittings.

D. American Society of Sanitary Engineering:
1. ASSE 1012 - Backflow Preventer with Intermediate Atmospheric Vent.
2. ASSE 1013 - Reduced Pressure Principle Backflow Preventers.

E. ASTM International:
1. ASTM B88 - Standard Specification for Seamless Copper Water Tube.
2. ASTM B88M - Standard Specification for Seamless Copper Water Tube (Metric).
3. ASTM C858 - Standard Specification for Underground Precast Concrete Utility Structures.
4. ASTM D698 - Standard Test Method for Laboratory Compaction Characteristics of Soil Using Standard Effort (12,400 ft-lbf/ft3 (600 kN-m/m3)).
5. ASTM D1557 - Standard Test Method for Laboratory Compaction Characteristics of Soil Using Modified Effort (6,000 ft-lbf/ft3 (2,700 kN-m/m3)).
6. ASTM D1785 - Standard Specification for Poly (Vinyl Chloride) (PVC) Plastic Pipe, Schedules 40, 80, and 120.
7. ASTM D2241 - Standard Specification for Poly (Vinyl Chloride) (PVC) Pressure-Rated Pipe (SDR Series).
8. ASTM D2466 - Standard Specification for Poly (Vinyl Chloride) (PVC) Plastic Pipe Fittings, Schedule 40.
9. ASTM D2855 - Standard Practice for Making Solvent-Cemented Joints with Poly (Vinyl Chloride) (PVC) Pipe and Fittings.
10. ASTM D2922 - Standard Test Method for Density of Soil and Soil-Aggregate in Place by Nuclear Methods (Shallow Depth).
11. ASTM D3017 - Standard Test Method for Water Content of Soil and Rock in Place by Nuclear Methods (Shallow Depth).
12. ASTM D3035 - Standard Specification for Polyethylene (PE) Plastic Pipe (DR-PR) Based on Controlled Outside Diameter.
13. ASTM D3139 - Standard Specification for Joints for Plastic Pressure Pipes Using Flexible Elastomeric Seals.

F. American Welding Society:
1. AWS A5.8 - Specification for Filler Metals for Brazing and Braze Welding.

G. American Water Works Association:
1. AWWA C104 - American National Standard for Cement-Mortar Lining for Ductile-Iron Pipe and Fittings for Water.
2. AWWA C105 - American National Standard for Polyethylene Encasement for Ductile-Iron Pipe Systems.
3. AWWA C111 - American National Standard for Rubber-Gasket Joints for Ductile-Iron Pressure Pipe and Fittings.
4. AWWA C151 - American National Standard for Ductile-Iron Pipe, Centrifugally Cast, for Water.
5. AWWA C500 - Metal-Seated Gate Valves for Water Supply Service.
6. AWWA C502 - Dry-Barrel Fire Hydrants.
7. AWWA C504 - Rubber-Sealed Butterfly Valves.
8. AWWA C508 - Swing-Check Valves for Waterworks Service, 2 in. (50 mm) Through 24 in. (600 mm) NPS.
9. AWWA C509 - Resilient-Seated Gate Valves for Water-Supply Service.
10. AWWA C600 - Installation of Ductile-Iron Water Mains and Their Appurtenances.
11. AWWA C606 - Grooved and Shouldered Joints.

12. AWWA C700 - Cold-Water Meters - Displacement Type, Bronze Main Case.
13. AWWA C701 - Cold-Water Meters - Turbine Type, for Customer Service.
14. AWWA C702 - Cold-Water Meters - Compound Type.
15. AWWA C706 - Direct-Reading, Remote-Registration Systems for Cold-Water Meters.
16. AWWA C900 - Polyvinyl Chloride (PVC) Pressure Pipe, 4 in. through 12 in., for Water Distribution.
17. AWWA C901 - Polyethylene (PE) Pressure Pipe and Tubing, 1/2 in. through 3 in., for Water Service.
18. AWWA M6 - Water Meters - Selection, Installation, Testing, and Maintenance.

H. Underwriters Laboratories Inc.:
1. UL 246 - Hydrants for Fire - Protection Service.

1.3 SUBMITTALS

A. Section 01330 - Submittal Procedures: Requirements for submittals.

B. Product Data: Submit data on pipe materials, pipe fittings, valves and accessories.

1.4 CLOSEOUT SUBMITTALS

A. Section 01700 - Execution Requirements: Requirements for submittals.

B. Project Record Documents: Record actual locations of piping mains, valves, connections, thrust restraints, and invert elevations.

C. Identify and describe unexpected variations to subsoil conditions or discovery of uncharted utilities.

1.5 QUALITY ASSURANCE

A. Perform Work in accordance Denver Water standards.

B. Maintain one copy of the approved water construction plans and Denver Water Standards documents on site.

1.6 DELIVERY, STORAGE, AND HANDLING

A. Section 01600 - Product Requirements: Requirements for transporting, handling, storing, and protecting products.

B. Deliver and store valves in shipping containers with labeling in place.

PART 2 PRODUCTS

2.1 All products shall conform to Denver Water Standards and Specifications.

PART 3 EXECUTION

3.1 The water distribution piping installation shall conform to Denver Water Standards and Specifications.

PART 4 MEASUREMENT AND PAYMENT

4.1 MEASUREMENT

A. Measurement will be made by the contract unit specified for Site Water Utility Distribution Piping.

4.2 PAYMENT

A. Payment will be made at the contract unit price, and shall include required materials, transportation, equipment, labor, and all other items required to complete the work as required in accordance with the Contract Drawings and Specifications.

END OF SECTION 33 14 16

SECTION 33 44 00 STORM SEWERAGE

PART 1 - GENERAL

1.1 RELATED DOCUMENTS

A. Contract Drawings and general provisions of the Contract, including General and Supplementary Conditions and Division 01 Specification Sections, apply to this Section.

1.2 SUMMARY

A. This section includes requirements for the construction of a complete storm sewerage system, including manholes, inlets, piping, and outfall structures. All work shall conform to the City and County of Denver Wastewater Storm Drainage and Sanitary Construction details and specifications document available at the following website:

https://www.denvergov.org/content/denvergov/en/right-of-way-services/engineering-regulatory-analytics/engineering-plan-review/manuals-regulations.html

B. Related Work:
1. Division 01 Section “Layout of Work and Surveys”.
2. Division 01 Section “Contractor Quality Control”.
3. Division 01 Section “Erosion and Sedimentation Control”.
4. Division 01 Section “Materials and Equipment”.
5. Division 01 Section “Tree Retention and Protection”.
6. Division 31 Section “Earth Moving”.
7. Division 31 Section “Excavation and Backfilling of Trenches”.
8. Division 32 Section “Sodding”.

PART 2 - PRODUCTS (Not Used)

PART 3 - EXECUTION (Not Used)

PART 4 - MEASUREMENT AND PAYMENT

4.1 MEASUREMENT

A. Measurement will be made by the contract unit specified for Storm Sewerage.

4.2 PAYMENT

A. Payment will be made at the contract unit price, and shall include required materials, transportation, equipment, labor, earthwork, stockpiling, disposing, hauling off, fittings, joints, joint materials, trenching, bedding materials, connections to other pipes or structures, compaction watering, dust control, erosion and sediment control, fine grading, as required in accordance with the Contract Drawings and Specifications.

END OF SECTION 33 44 00

SECTION 33 46 00 SUBDRAINAGE SYSTEMS

PART 1 - GENERAL

1.1 RELATED DOCUMENTS

A. Contract Drawings and general provisions of the Contract, including General and Supplementary Conditions and Division 01 Specification Sections, apply to this Section.

1.2 SUMMARY

A. This Section includes requirements for furnishing and installation of sub-drainage systems as shown on the Contract Drawings, as specified herein, or as required to complete the work.

B. Related Work:
1. Division 01 Section “Layout of Work and Surveys”.
2. Division 01 Section “Contractor Quality Control”.
3. Division 01 Section “Erosion and Sedimentation Control”.
4. Division 01 Section “Materials and Equipment”.
5. Division 01 Section “Tree Retention and Protection”.
6. Division 31 Section “Earth Moving”.
7. Division 31 Section “Excavation and Backfilling of Trenches”.
8. Division 32 Section “Sodding”.
9. Division 33 Section “Storm Sewerage”.

1.3 SUBMITTALS

A. See Division 01 Section “Submittals” for submittal requirements.

B. Product Data: For each type of product for approval prior to construction.
1. Piping: Submit twelve inch (12”) length of each type of underdrain piping to be used.
2. Geotextile Fabric: Submit twelve inch (12”) by twelve inch (12”) sample.
3. Bedding material: Submit one (1) quart sample.
4. Filter material: Submit one (1) quart sample.

1.4 QUALITY CONTROL

A. Installer Qualifications: Engage an experienced Installer who has completed subdrainage work similar in material, design, and extent to that indicated for this Project and with a record of successful project completion and operation.

1.5 DELIVERY, STORAGE, AND HANDLING

A. Materials: Deliver materials in original containers. Protect materials from damage during delivery and while stored at site. The Project Manager reserves the right to inspect containers before or after installation to verify compliance with Specifications.

B. Bulk Materials:
1. Do not dump or store bulk materials near structures, utilities, walkways and pavements, or on existing turf areas or plants.

2. Provide erosion-control measures to prevent erosion or displacement of bulk materials; discharge of soil-bearing water runoff; and airborne dust reaching adjacent properties, water conveyance systems, or walkways.
3. Accompany each delivery of bulk materials with appropriate certificates.
4. Protect piping and geotextile fabric from damage or contamination with soil or other construction materials from time of deliver to installation.

1.6 PROJECT/SITE CONDITIONS

A. Field Measurements: Verify actual grade elevations, service and utility locations, irrigation system components, and dimensions of plantings and related construction contiguous with proposed subdrainage installations by field measurements before proceeding with planting work.

PART 2 - PRODUCTS

2.1 MATERIALS

A. PVC under drain: ASTM D2729, minimum 4-inch diameter, plain or perforated type as indicated on the Contract Drawings, with required fittings. Perforated pipe shall comply with requirements of ASTM 272a, with 2 rows of evenly spaced three eighths inch (3/8”) diameter perforations, one hundred twenty (120)-degrees apart, providing a minimum number of holes of four (4) per foot.

B. Geotextile Fabric: Non-woven fabric “140N” by Tencate-Mirafi or acceptable substitution.

C. Bedding Material: Solid pipe bedding material to be three quarters inch (3/4”) crushed stone. Perforated pipe, refer to manufacturers specifications or drawings for required bedding material.

D. Filter Material: Three quarters inch (3/4”) crushed washed stone.

PART 3 - EXECUTION

3.1 INSTALLATION

A. Examine areas where the Work of this Section will be performed for compliance with requirements and conditions affecting installation and performance.

1. Verify that no foreign or deleterious material or liquid such as paint, paint washout, concrete slurry, concrete layers or chunks, cement, plaster, oils, gasoline, diesel fuel, paint thinner, turpentine, tar, roofing compound, or acid has been deposited in soil within the work area.
2. Verify that final grades are completed in accordance with the drawings.

B. Proceed with installation only after unsatisfactory conditions have been corrected and approved by Project Manager.

C. PVC under drain: Install pipe under drains as shown on the Contract Drawings. Pitch shall be a minimum of one half of one percent (0.5%) or as shown on Contract Drawings. Contractor is responsible to immediately notify the Project Manager of any discrepancies.

D. Solid Pipe: Refer to the City and County of Denver Wastewater Storm Drainage and Sanitary Construction details and specifications document available at the following website:

https://www.denvergov.org/content/denvergov/en/right-of-way-services/engineering-regulatory-analytics/engineering-plan-review/manuals-regulations.html

E. Geotextile fabric used for the pipe under drains system shall be placed in the trench once pipe trench is prepared to receive pipe. The fabric shall be placed in full contact with the trench bottom and sides. The fabric shall be secured to the trench sides or top edge in a manner which does not damage the integrity of the fabric. The fabric shall be protected from damage during the placement of the pipe and granular fill. Install granular fill and pipe in trench to dimensions specified on Contract Drawings. Contractor is responsible to ensure that no debris, sediment or foreign material enters the granular fill that inhibit drainage. Any installation that does not meet these standards shall be replaced at the direction of the Project Manager at no additional cost to the City. Fabric edges shall overlap at least 6-inches for the full width of the trench.

3.2 CLEANING

A. Clean and flush out lines before covering. Remove and legally dispose of all waste material and debris offsite.

3.3 RESTORATION

A. Restore all fences, ditches, yards, lawns, and other structures or surfaces to condition equal to or better than before work began.

PART 4 - MEASUREMENT AND PAYMENT

4.1 MEASUREMENT

A. Measurement will be made by the contract unit specified for Subdrainage Systems.

4.2 PAYMENT

A. Payment will be made at contract unit price, and shall include required materials, transportation, equipment, labor, excavation, stockpiling, disposing, hauling off, associated fittings, joints, joint materials, trenching, bedding materials, connections to other pipes or structures, compaction watering, dust control, erosion and sediment control, fine grading, as required in accordance with the Contract Drawings and Specifications.

END OF SECTION 33 46 00

APPENDICES